CH13NA 018–061
Single–Stage Heat Pump with Puron® Refrigerant

Carrier
turn to the experts™

Product Data

Carrier's CH13 has been designed utilizing Carrier's Puron refrigerant. The environmentally sound refrigerant allows you to make a responsible decision in the protection of the earth's ozone layer.

NOTE: **Ratings contained in this document are subject to change at any time. Always refer to the AHRI directory (www.ahridirectory.org) for the most up-to-date ratings information.**

INDUSTRY LEADING FEATURES / BENEFITS

Efficiency

- 13 SEER
- Microtube Technology™ refrigeration system

Reliability

- Puron® refrigerant - environmentally sound, won't deplete the ozone layer and low lifetime servce cost.
- Scroll compressor
- Internal pressure relief valve
- Internal thermal overload
- Filter drier

Durability

WeatherArmor™ protection package:

- Solid, durable sheet metal construction
- Dense wire coil guard

Applications

- Long-line - up to 250 feet (76.20 m) total equivalent length, up to 200 feet (60.96 m) condenser above evaporator, or up to 80 ft. (24.38 m) evaporator above condenser (See Longline Guide for more information.)
- Low ambient (down to -20°F/-28.9°C)) with accessory kit

PRODUCT NUMBER NOMENCLATURE

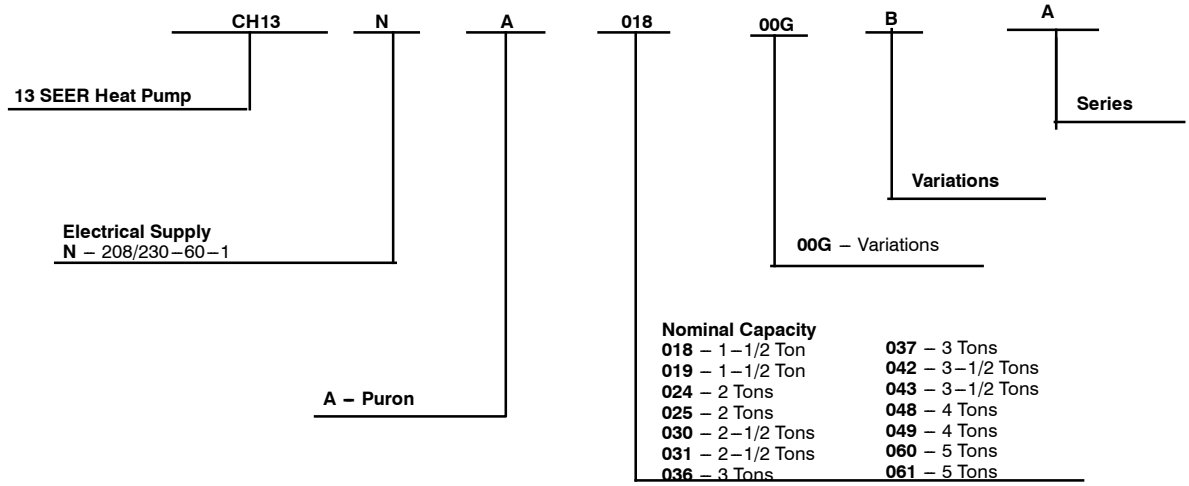

Puron™
the environmentally sound refrigerant

AHRI CERTIFIED™ www.ahridirectory.org

Use of the AHRI Certified TM Mark indicates a manufacturer's participation in the program For verification of certification for individual products, go to www.ahridirectory.org.

c UL US

VAPOR LINE SIZING AND COOLING CAPACITY LOSS

Acceptable vapor line diameters provide adequate oil return to the compressor while avoiding excessive capacity loss. The suction line diameters shown in the chart below are acceptable for HP systems with Puron refrigerant:

Vapor Line Sizing and Cooling Capacity Losses - Puron® Refrigerant 1- Stage Heat Pump Applications

Unit Nominal Size (Btuh)	Maximum Liquid Line Diameters (In. OD)	Vapor Line Diameters (In.) OD	Cooling Capacity Loss (%) Total Equivalent Line Length ft. (m)								
			Standard Application		Long Line Application Requires Accessories						
			26–50 (7.9–15.2)	51–80 (15.5–24.4)	81–100 (24.7–30.5)	101–125 (30.8–38.1)	126–150 (38.4–45.7)	151–175 (46.0–50.3)	176–200 (53.6–60.0)	201–225 (61.3–68.6)	226–250 (68.9–76.2)
18,000 / 19,000 1–Stage HP with Puron	3/8	1/2	1	2	3	4	6	7	8	9	10
		5/8	0	0	1	1	1	2	2	3	3
24,000 / 25,000 1–Stage HP with Puron	3/8	5/8	0	1	1	2	3	3	4	4	5
		3/4	0	0	0	0	1	1	1	1	1
30,000 / 31,000 1–Stage HP with Puron	3/8	5/8	1	2	3	3	4	5	6	7	8
		3/4	0	0	1	1	1	2	2	2	3
		7/8	0	0	0	0	1	1	1	1	1
36,000 / 37,000 1–Stage HP with Puron	3/8	5/8	1	2	4	5	6	7	9	10	11
		3/4	0	0	1	1	2	2	3	3	4
		7/8	0	0	0	0	1	1	1	1	2
42,000 / 43,000 1–Stage HP with Puron	3/8	3/4	0	1	2	2	3	4	4	5	6
		7/8	0	0	1	1	1	2	2	2	3
48,000 / 49,000 1–Stage HP with Puron	3/8	3/4	0	1	2	3	4	5	5	6	7
		7/8	0	0	1	1	2	2	2	3	3
60,000 / 61,000 1–Stage HP with Puron	3/8	3/4	1	2	4	5	6	7	9	10	11
		7/8	0	1	2	2	3	4	4	5	5
		1–1/8	0	0	0	1	1	1	1	1	1

Standard Length = 80 ft. (24.4 m) or less total equivalent length

Applications in this area are long line. Accessories are required as shown recommended on Long Line Application Guidelines

Applications in this area may have height restrictions that limit allowable total equivalent length, when outdoor unit is below indoor unit See Long Line Application Guidelines

REFRIGERANT PIPING LENGTH LIMITATIONS

Maximum Line Lengths:

The maximum allowable total equivalent length for heat pumps varies depending on the vertical separation. See the tables below for allowable lengths depending on whether the outdoor unit is on the same level, above or below the outdoor unit.

Maximum Line Lengths for Heat Pump Applications

	MAXIMUM ACTUAL LENGTH ft (m)	MAXIMUM EQUIVALENT LENGTH† ft (m)	MAXIMUM VERTICAL SEPARATION ft (m)
Units on equal level	200 (61)	250 (76.2)	N/A
Outdoor unit ABOVE indoor unit	200 (61)	250 (76.2)	200 (61)
Outdoor unit BELOW indoor unit	See Table *'Maximum Total Equivalent Length: Outdoor Unit BELOW Indoor Unit'*		

† Total equivalent length accounts for losses due to elbows or fitting. See the Long Line Guideline for details.

Maximum Total Equivalent Length† - Outdoor Unit BELOW Indoor Unit

Size	Liquid Line Diameter w/ TXV	HP with Puron® Refrigerant – Maximum Total Equivalent Length† Vertical Separation ft (m) Outdoor unit BELOW indoor unit;						
		0–20 (0 – 6.1)	21–30 (6.4 – 9.1)	31–40 (9.4 – 12.2)	41–50 (12.5 – 15.2)	51–60 (15.5 – 18.3)	61–70 (18.6 – 21.3)	71–80 (21.6 – 24.4)
018, 019 HP with Puron	3/8	250*	250*	250*	250*	250*	250*	250*
024, 025 HP with Puron	3/8	250*	250*	250*	250*	250*	250*	250*
030, 031 HP with Puron	3/8	250*	250*	250*	250*	250*	250*	250*
036, 037 HP with Puron	3/8	250*	250*	250*	250*	250*	250*	250*
042, 043 HP with Puron	3/8	250*	250*	250*	250*	250*	250*	150
048, 049 HP with Puron	3/8	250*	250*	250*	250*	230	160	– –
060, 061 HP with Puron	3/8	250*	225*	190	150	110	– –	– –

*** Maximum actual length not to exceed 200 ft (61 m)**

† Total equivalent length accounts for losses due to elbows or fitting. See the Long Line Guideline for details.

– – = outside acceptable range

LONG LINE APPLICATIONS

An application is considered Long Line when the refrigerant level in the system requires the use of accessories to maintain acceptable refrigerant management for systems reliability. Defining a system as long line depends on the liquid line diameter, actual length of the tubing, and vertical separation between the indoor and outdoor units.

For Heat Pump systems, the chart below shows when an application is considered Long Line. Beyond these lengths, long line accessories are required:

HP WITH PURON® REFRIGERANT LONG LINE DESCRIPTION ft (m)
Beyond these lengths, long line accessories are required

Liquid Line Size	Units On Same Level	Outdoor Below Indoor	Outdoor Above Indoor
3/8	80 (24.4)	20 (6.1) vertical or 80 (24.4) total	80 (24.4)

Note: See Long Line Guideline for details

CH13NA

SPECIFICATIONS

UNIT SIZE–SERIES	018–A	019–B	024–A	025–B	030–A	031–B	036–C	037–C
ELECTRICAL								
Unit Volts—Phase—Hertz	208/230—1—60							
Operating Voltage Range	197—253							
Unit Ampacity for Wire Sizing (MCA)	11.8	11.8	16.8	17.7	21.1	20.8	20.6	20.4
Min Wire Size (60°C/75°C Copper) (AWG)*	14	14	14	14	12	12	12	12
Maximum Length (60°C/75°C) (Ft)†	66/62	66/62	46/44	46/44	57/54	57/54	60/57	60/57
Max Branch Circuit Fuse Size (Amps)‡	20	20	25	25	35	30	35	35
Compressor Rated Load Amps	9.0	9.0	12.8	13.5	16.0	16.0	15.6	15.4
Locked Rotor Amps	48.0	48.0	58.3	58.3	77.0	77.0	70.0	70.0
Fan Motor HP and RPM	1/12 & 1100	1/12 & 1100	1/10 & 1100	1/10 & 1100	1/5 & 1100	1/10 & 1100	1/5 & 1100	1/5 & 1100
Full Load Amps	0.5	0.5	0.77	0.75	1.1	0.75	1.1	1.1
COMPRESSOR AND REFRIGERANT								
Compressor Type	Scroll							
Refrigerant Charge lb (kg)	4.00 (1.81)	5.3 (2.08)	5.11 (2.33)	6.75 (3.06)	5.83 (2.64)	7.5 (3.40)	6.06 (2.75)	7.60 (3.45)
REFRIGERANT TUBES								
Rated Vapor***	5/8	5/8	3/4	5/8	3/4	3/4	7/8	3/4
Liquid	3/8							
OUTDOOR COIL AND FAN								
Coil Face Area (Sq Ft)	9.8	12.6	11.2	15.1	15.0	21.6	17.2	21.6
Rated Airflow (CFM)	1800	1700	2100	2614	3000	2614	3000	3365
OPTIONAL EQUIPMENT								
Time–Delay Relay	KAATD0101TDR							
Outdoor Thermostat	KHAOT0301FST							
Secondary Outdoor Thermostat	KHAOT0201SEC							
Cycle Protector	KSACY0101AAA							
Crankcase Heater	KAACH1401AAA							
Compressor Start Assist—Capacitor/Relay	KSAHS1501AAA							
Sound Hood	KSASH1801COP						KSASH0601COP	
TXV Kits (Hard Shutoff)	KSATX0201PUR						KSATX0301PUR	
Low–Ambient Pressure Switch††	KSALA0301410							
MotorMaster® Low–Ambient Controller‡‡	KSALA0601AAA							
Ball Bearing Fan Motor	HC32GE234		HC34GE239				HC38GE219	
Liquid Line Filter Drier (RCD)	KH43LZ073							
Evaporator Freeze Thermostat**	KAAFT0101AAA							
Isolation Relay**	KHAIR0101AAA							
Liquid Solenoid Valve	KHALS0401LLS							

N/A – Not applicable in this application.

* The ampacity of non–metallic (NM) sheathed cable shall be that of 60° C (140° F) conductors per NEC 2011, Article 336–26. If wire used is other than specified in chart, refer to applicable tables available in 2011 NEC. Copper wire must be used from disconnect to unit.

† Length shown is as measured 1 way along the wire path between the unit and the service panel for a voltage drop not to exceed 2%.

‡ Units may use fuses or circuit breakers (U.S. only).

** Consult low–ambient control Installation Instructions for application.

†† Isolation relay required.

‡‡ Required accessories include fan motor with ball bearings, crankcase heater, compressor start assist, evaporator freeze stat, isolation relay, hard shut–off TXV or liquid line solenoid valve.

*** Units are rated with 25 ft (7.6 m) of lineset length. See *Vapor Line Sizing and Cooling Capacity Loss* table when using other sizes and lengths of lineset.

SPECIFICATIONS CONTINUED

UNIT SIZE–SERIES	042–C	043–B	048–C	049–B	060–C	061–A
ELECTRICAL						
Unit Volts—Phase—Hertz	208/230—1—60					
Operating Voltage Range	197—253					
Unit Ampacity for Wire Sizing (MCA)	23.9	26.0	28.7	28.7	34.8	34.1
Min Wire Size (60°C/75°C Copper) (AWG)*	12	10	10	10	8	8
Maximum Length (60°C/75°C) (Ft)†	52/50	77/73	69/66	70/66	89/84	89/84
Max Branch Circuit Fuse Size (Amps)‡	40	40	45	40	50	50
Compressor Rated Load Amps	18.0	19.9	21.8	21.8	26.7	26.3
Locked Rotor Amps	96.0	109.0	99.0	117.0	120.0	134.0
Fan Motor HP and RPM	1/4 & 1100	1/5 & 1100	1/4 & 1100	1/4 & 1100	1/4 & 1100	1/4 & 1100
Full Load Amps	1.4	0.75	1.4	1.4	1.4	1.2
COMPRESSOR AND REFRIGERANT						
Compressor Type	Scroll					
Refrigerant Charge lb (kg)	6.75 (3.06)	8.9 (4.04)	7.72 (3.50)	10.5 (4.76)	9.40 (4.26)	11.0 (4.99)
REFRIGERANT TUBES						
Rated Vapor***	7/8				1–1/8	
Liquid	3/8					
OUTDOOR COIL AND FAN						
Coil Face Area (Sq Ft)	17.2	15.1	15.0	17.1	17.2	17.6
Rated Airflow (CFM)	3400	3000	3400	3365	3400	4046
OPTIONAL EQUIPMENT						
Time–Delay Relay	KAATD0101TDR					
Outdoor Thermostat	KHAOT0301FST					
Secondary Outdoor Thermostat	KHAOT0201SEC					
Cycle Protector	KSACY0101AAA					
Crankcase Heater	KAACH1201AAA					
Compressor Start Assist—Capacitor/Relay	KSAHS1501AAA					KSAHS1701AAA
Sound Hood	KSASH0601COP	KSASH2101COP				
TXV Kits (Hard Shutoff)	KSATX0301PUR	KSATX0401PUR			KSATX0501PUR	
Low–Ambient Pressure Switch††	KSALA0301410					
MotorMaster® Low–Ambient Controller‡‡	KSALA0601AAA					
Ball Bearing Fan Motor	HC40GE226	HC38GE219	HC40GE226			HC40GE228
Liquid Line Filter Drier (RCD)	KH43LZ073			KH43LZ073	KH43LZ072	KH43LZ072
Evaporator Freeze Thermostat**	KAAFT0101AAA					
Isolation Relay**	KHAIR0101AAA					
Liquid Solenoid Valve	KHALS0401LLS					

N/A – Not applicable in this application.

* The ampacity of non–metallic (NM) sheathed cable shall be that of 60° C (140° F) conductors per NEC 2011, Article 336–26. If wire used is other than specified in chart, refer to applicable tables available in 2011 NEC. Copper wire must be used from disconnect to unit.

† Length shown is as measured 1 way along the wire path between the unit and the service panel for a voltage drop not to exceed 2%.

‡ Units may use fuses or circuit breakers (U.S. only).

** Consult low–ambient control Installation Instructions for application.

†† Isolation relay required.

‡‡ Required accessories include fan motor with ball bearings, crankcase heater, compressor start assist, evaporator freeze stat, isolation relay, hard shut–off TXV or liquid line solenoid valve.

*** Units are rated with 25 ft (7.6 m) of lineset length. See *Vapor Line Sizing and Cooling Capacity Loss* table when using other sizes and lengths of lineset.

METERING DEVICE

UNIT SIZE – SERIES	OUTDOOR PISTON	REQUIRED TXV SUBCOOLING °F (°C)	INDOOR METERING DEVICE
018 – A	42	13 (7.2)	49
019 – B	42	11 (6.1)	49
024 – A	49	13 (7.2)	57
025 – B	42	11 (6.1)	57
030 – A	55	9 (5.0)	67
031 – B	55	10 (5.6)	70
036 – C	57	14 (7.5)	70
037 – C	57	10 (5.6)	73
042 – C	63	15 (8.0)	76
043 – B	65	13 (7.2	78
048 – C	65	17 (9.0)	80
049 – B	70	10 (5.6)	84
060 – C	76	18 (10.0)	TXV*
061 – A	76	15 (8.0)	TXV*

* TXV must be ordered separately when indoor coil is not equipped with a TXV. TXV must be hard – shutoff type.

RECOMMENDED TUBE DIAMETERS

UNIT SIZE	LIQUID TUBE DIAMETER (In.)	VAPOR TUBE DIAMETER (In.)
018, 019	3/8	5/8
024	3/8	3/4
025	3/8	5/8
030, 31	3/8	3/4
036	3/8	7/8
037	3/8	3/4
042, 043, 048, 049	3/8	7/8
060, 061	3/8	1 – 1/8

* For tube set over 80 ft / 24.38 m horizontal and/or 20 ft / 6.10 m vertical differential, consult Residential Split System Long Line Application Guidelines.

A-WEIGHTED SOUND POWER (dBA)

UNIT SIZE – SERIES	Standard Rating (dBA)	TYPICAL OCTAVE BAND SPECTRUM (dBA without tone adjustment)						
		125	250	500	1000	2000	4000	8000
018 – A	71	50.5	58.5	64.5	66.0	64.0	57.5	52.0
019 – B	70	50.0	58.0	63.5	65.5	60.0	57.0	52.0
024 – A	71	51.5	60.0	64.5	66.0	64.0	60.0	56.5
025 – B	74	52.5	61.5	68.0	70.0	67.0	63.5	58.5
030 – A	74	53.5	63.0	68.0	69.5	66.5	63.5	58.0
031 – B	74	49.5	59.5	65.0	70.5	66.0	64.5	60.0
036 – C	74	54.5	61.0	68.0	68.5	65.5	64.0	58.5
037 – C	72	53.0	60.0	66.5	67.5	65.0	63.0	57.5
042 – C	77	53.0	64.5	70.0	72.0	69.5	67.5	60.0
043 – B	77	56.0	66.5	70.0	72.0	67.5	64.0	57.0
048 – C	78	58.0	66.0	71.5	73.0	71.5	68.0	61.0
049 – B	78	57.0	66.0	71.0	73.5	70.5	67.0	61.0
060 – C	79	58.0	66.0	71.0	73.0	72.5	68.0	61.0
061 – A	77	55.0	63.0	67.5	71.5	68.0	64.0	60.5

Note: Tested in accordance with AHRI standard 270 – 2008 (Not listed with AHRI)

A-WEIGHTED SOUND POWER (dBA) WITH SOUND BLANKET

UNIT SIZE – SERIES	Standard Rating (dBA)	TYPICAL OCTAVE BAND SPECTRUM (dBA without tone adjustment)						
		125	250	500	1000	2000	4000	8000
018 – A	70	51.0	60.0	65.0	65.0	62.0	57.0	50.5
019 – B	68	49.5	56.0	62.5	63.5	59.0	56.0	50.5
024 – A	70	51.0	60.0	64.5	65.5	63.0	59.5	53.5
025 – B	73	52.5	61.0	67.5	69.0	65.5	62.0	56.5
030 – A	73	53.5	63.0	68.5	68.5	66.0	63.0	56.5
031 – B	73	51.5	62.0	66.5	67.5	64.5	62.0	57.5
036 – C	73	54.5	60.5	67.0	68.0	65.5	63.0	57.5
037 – C	72	54.5	59.5	66.0	67.0	64.0	62.0	56.5
042 – C	76	54.0	63.5	70.5	71.5	69.0	66.0	59.0
043 – B	76	57.0	66.0	70.0	70.5	67.0	63.5	56.5
048 – C	78	59.0	66.0	72.0	73.0	71.5	67.5	60.5
049 – B	77	58.0	66.5	71.0	72.5	70.0	66.5	59.5
060 – C	78	59.0	66.0	71.0	72.5	71.0	67.5	60.5
061 – A	74	55.0	63.5	67.0	69.0	66.5	62.0	57.0

Note: Tested in accordance with AHRI standard 270 – 2008 (Not listed with AHRI)

ACCESSORY USAGE GUIDELINE

ACCESSORY	REQUIRED FOR LOWMBIENT COOLING APPLICATIONS (Below 55°F / 22.8°C)	REQUIRED FOR LONG LINE APPLICATIONS* (Over 80 Ft./24.4 m)	REQUIRED FOR SEA COAST APPLICATIONS (Within 2 miles/3.2 km)
Ball Bearing Fan Motor	Yes†	No	No
Compressor Start Assist Capacitor and Relay	Yes	Yes	No
Crankcase Heater	Yes	Yes	No
Evaporator Freeze Thermostat	Yes	No	No
Hard Shut–Off TXV	Yes	Yes	Yes
Liquid Line Solenoid Valve	No	See Long–Line Application Guideline	No
Low Ambient Kit (Pressure Switch)	Yes	No	No
Support Feet	Recommended	No	Recommended
Winter Start Control	Yes	No	No

* For tubing line sets between 80 and 200 ft. (24.4 and 76.2 m) and/or 20 ft. (6.1 m) vertical differential, refer to Residential Split–System Longline Application Guideline.

† Required for Low Ambient Controller (full modulation feature) and MotorMaster® Control only.

Accessory Description and Usage (Listed Alphabetically)

1. Compressor Start Assist - Capacitor and Relay

Start capacitor and relay gives a ”hard” boost to compressor motor at each start up.

Usage Guideline:

Required for reciprocating compressors in the following applications:

Long line

Low ambient cooling

Hard shut off expansion valve on indoor coil

Liquid line solenoid on indoor coil

Required for single-phase scroll compressors in the following applications:

Long line

Low ambient cooling

Suggested for all compressors in areas with a history of low voltage problems.

2. Compressor Start Assist — PTC Type

Solid state electrical device which gives a ”soft” boost to the compressor at each start-up.

Usage Guideline:

Suggested in installations with marginal power supply.

3. Crankcase Heater

An electric resistance heater which mounts to the base of the compressor to keep the lubricant warm during off cycles. Improves compressor lubrication on restart and minimizes the chance of liquid slugging.

Usage Guideline:

Required in low ambient cooling applications.

Required in long line applications.

4. Cycle Protector

The cycle protector is designed to prevent compressor short cycling. This control provides an approximate 5-minute delay after power to the compressor has been interrupted for any reason, including power outage, protector control trip, thermostat jiggling, or normal cycling.

Suggested in all commercial applications.

5. Evaporator Freeze Thermostat

An SPST temperature actuated switch that stops unit operation when evaporator reaches freeze-up conditions.

Usage Guideline:

Required when low ambient kit has been added.

6. Low Ambient Pressure Switch Kit

A long life pressure switch which is mounted to outdoor unit service valve. It is designed to cycle the outdoor fan motor in order to maintain head pressure within normal operating limits (approximately 100 psig to 225 psig). The control will maintain working head pressure at low ambient temperatures down to 0°F/-17.8°C when properly installed.

Usage Guideline:

A Low Ambient Pressure Switch or MotorMaster® Low Ambient Controller must be used when cooling operation is used at outdoor temperatures below 55°F (12.8°C).

Suggested for all commercial applications.

7. Support Feet

Four stick-on plastic feet that raise the unit 4 in. (101.6 mm) above the mounting pad. This allows sand, dirt, and other debris to be flushed from the unit base, minimizing corrosion.

Usage Guideline:

Suggested in the following applications:

Coastal installations.

Windy areas or where debris is normally circulating.

Rooftop installations.

For improved sound ratings.

8. Thermostatic Expansion Valve (TXV)

A modulating flow-control valve which meters refrigerant liquid flow rate into the evaporator in response to the superheat of the refrigerant gas leaving the evaporator.

Kit includes valve, adapter tubes, and external equalizer tube. Hard shut off types are available.

NOTE: When using a hard shut off TXV with single phase reciprocating compressors, a Compressor Start Assist Capacitor and Relay is required.

Usage Guideline:

Required to achieve AHRI ratings in certain equipment combinations. Refer to combination ratings.

Hard shut off TXV or LLS required in air conditioner long line applications.

Required for use on all zoning systems.

9. Winter Start Control

This control is designed to alleviate nuisance opening of the low-pressure switch by bypassing it for the first 3 minutes of operation.

DIMENSIONS - ENGLISH

UNIT	SERIES	ELECTRICAL CHARACTERISTICS				A	B	C	D	E	F	G	K	L	M	N	P	OPERATING WEIGHT(LBS)	SHIPPING WEIGHT(LBS)	SHIPPING DIMENSIONS (L x W x H)
		208-230-1-60	230-1-60	208/230-3-60	460-3-60															
CH13NA018	A	X	O	O	O	23 1/8"	28 7/16"	3 3/4"	5/8"	4 7/16"	18 1/16"	7 13/16"	2 13/16"	1/2"	11 1/2"	10 1/2"	11 1/2"	119	137	24 1/8" X 24 1/8" X 30 5/8"
CH13NA024	A	X	O	O	O	23 1/8"	31 13/16"	3 3/4"	3/4"	4 7/16"	18 1/16"	7 13/16"	2 13/16"	1/2"	11 1/2"	10 1/2"	12 1/2"	124	142	24 1/8" X 24 1/8" X 34"
CH13NA030	A	X	O	O	O	31 3/16"	28 7/16"	3 3/4"	3/4"	6 9/16"	24 11/16"	9 1/8"	2 15/16"	5/8"	15"	15"	11 1/2"	149	170	32 3/16" X 32 3/16" X 30 5/8"
CH13NA036	A,C	X	O	O	O	31 3/16"	31 13/16"	3 7/8"	7/8"	6 9/16"	24 11/16"	9 1/8"	2 15/16"	5/8"	15"	15"	12 1/2""	169	189	32 3/16" X 32 3/16" X 34"
CH13NA042	A,C	X	O	O	O	31 3/16"	31 13/16"	3 7/8"	7/8"	6 9/16"	24 11/16"	9 1/8"	2 15/16"	5/8"	15"	15"	12 1/2"	180	200	32 3/16" X 32 3/16" X 34"
CH13NA048	A,C	X	O	O	O	31 3/16"	28 7/16"	3 7/8"	7/8"	6 9/16"	24 11/16"	9 1/8"	2 15/16"	5/8"	15"	15"	11 1/2"	208	228	32 3/16" X 32 3/16" X 30 5/8"
CH13NA060	A,C	X	O	O	O	31 3/16"	31 13/16"	3 7/8"	7/8"	6 9/16"	24 11/16"	9 1/8"	2 15/16"	5/8"	15"	15"	12 1/2"	224	248	32 3/16" X 32 3/16" X 34"

X = YES
O = NO

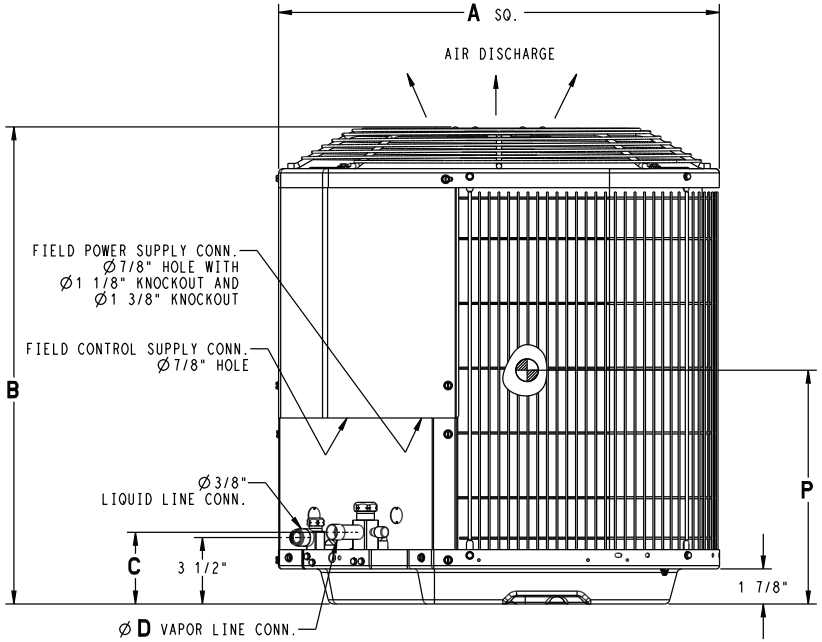

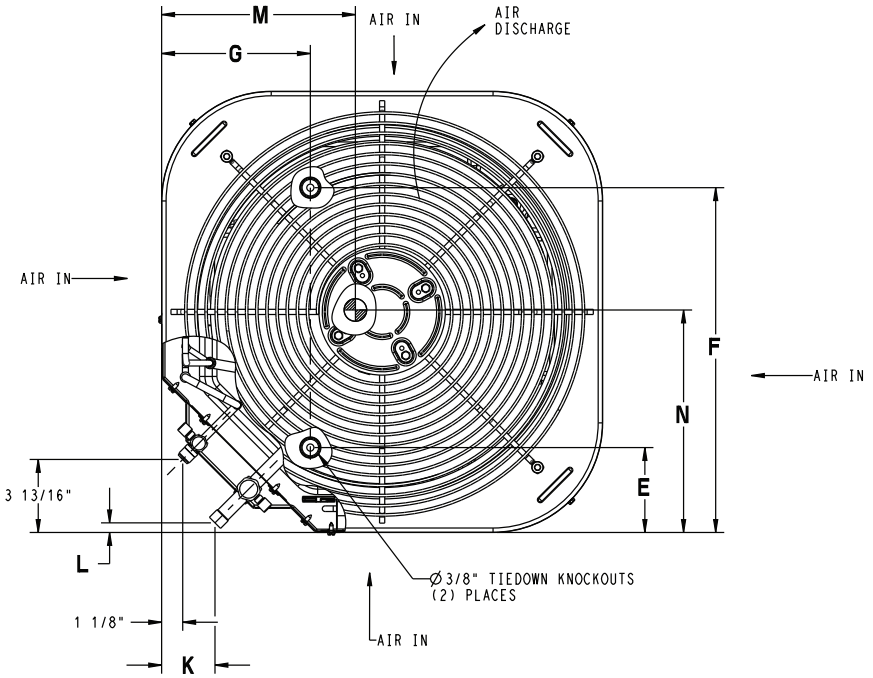

UNIT SIZE	MINIMUM MOUNTING PAD DIMENSIONS
18,24	23 1/2" X 23 1/2"
--	26" X 26"
30,36,42,48,60	31 1/2" X 31 1/2"
--	35" X 35"

DIMENSIONS - ENGLISH (CONTINUED)

UNIT	SERIES	ELECTRICAL CHARACTERISTICS				A	B	C	D	E	F	G	K	L	M	N	P	OPERATING WEIGHT(LBS)	SHIPPING WEIGHT(LBS)	SHIPPING DIMENSIONS (L x W x H)
CH13NA019	B	X	O	O	O	23 1/8"	35 3/16"	3 3/4"	5/8"	4 7/16"	18 1/16"	7 13/16"	2 13/16"	1/2"	11 1/2"	10 1/2"	13 1/2"	134	148	24 1/8" X 24 1/8" X 37 1/4"
CH13NA025	A,B	X	O	O	O	31 3/16"	28 7/16"	3 3/4"	5/8"	6 9/16"	24 11/16"	9 1/8"	2 13/16"	1/2"	15 5/8"	16 3/4"	14 1/2"	151	171	32 1/4" X 32 1/4" X 30 3/8"
CH13NA031	A,B	X	O	O	O	31 3/16"	39 1/8"	3 3/4"	3/4"	6 9/16"	24 11/16"	9 1/8"	2 15/16"	1/2"	15 5/8"	16 3/4"	17"	172	194	32 1/4" X 32 1/4" X 40 5/8"
CH13NA037	C	X	O	O	O	31 3/16"	39 1/8"	3 3/4"	3/4"	6 9/16"	24 11/16"	9 1/8"	2 15/16"	1/2"	15 5/8"	16 3/4"	17"	181	203	32 1/4" X 32 1/4" X 40 5/8"
CH13NA043	B	X	O	O	O	31 3/16"	28 7/16"	3 7/8"	7/8"	6 9/16"	24 11/16"	9 1/8"	2 15/16"	5/8"	15"	15"	11 1/2"	208	228	32 1/4" X 32 1/4" X 30 3/8"
CH13NA049	B	X	O	O	O	31 3/16"	31 13/16"	3 7/8"	7/8"	6 9/16"	24 11/16"	9 1/8"	2 15/16"	5/8"	15"	15"	12 1/2"	224	248	32 1/4" X 32 1/4" X 34"
CH13NA061	B	X	O	O	O	35"	28 15/16"	3 7/8"	7/8"	6 9/16"	28 7/16"	9 1/8"	2 15/16"	5/8"	17"	16"	12"	250	282	37 1/8" X 37 1/8" X 30"
		208-230-1-60	230-1-60	208/230-3-60	460-3-60															

X = YES
O = NO

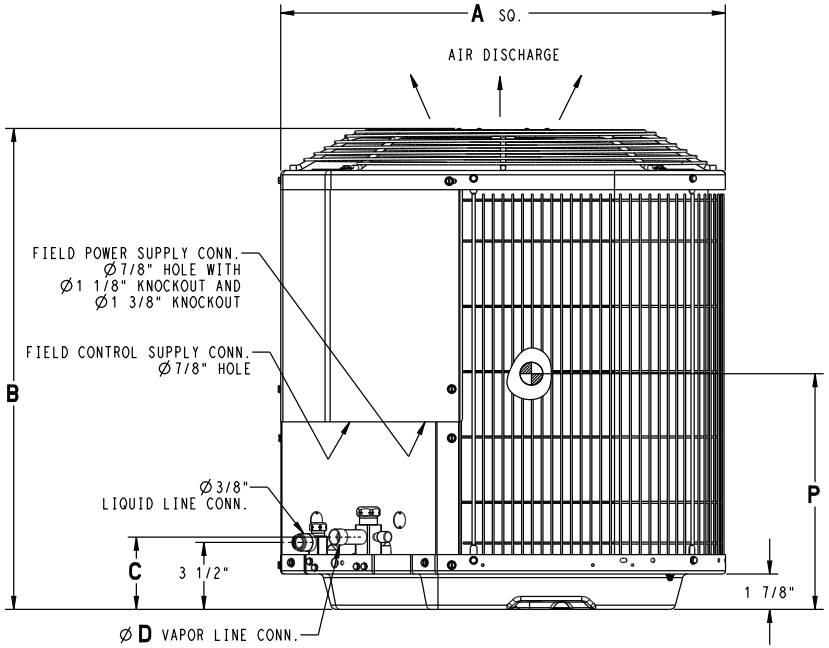

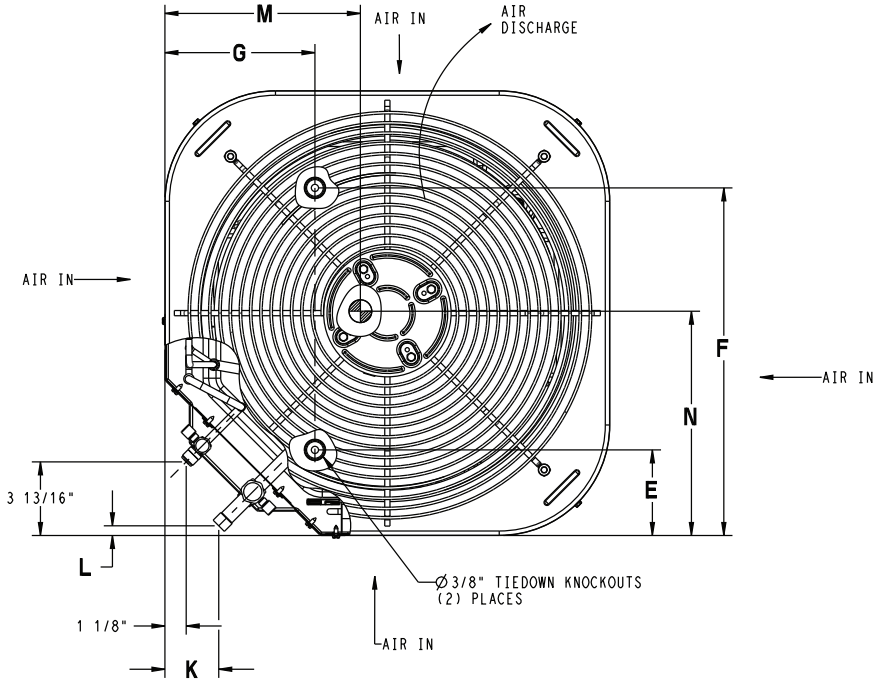

UNIT SIZE	MINIMUM MOUNTING PAD DIMENSIONS
19	23 1/2" X 23 1/2"
--	26" X 26"
25,31,37,43,49	31 1/2" X 31 1/2"
61	35" X 35"

DIMENSIONS - SI

UNIT	SERIES	ELECTRICAL CHARACTERISTICS				A	B	C	D	E	F	G	K	L	M	N	P	OPERATING WEIGHT(Kgs)	SHIPPING WEIGHT(Kgs)	SHIPPING DIMENSIONS (L x W x H)
CH13NA018	A	X	O	O	O	587.4	722.3	95.2	15.9	112.7	458.8	198.4	71.4	12.7	292.1	266.7	292.1	54.1	62.3	612.8 X 612.8 X 777.9
CH13NA024	A	X	O	O	O	587.4	808.0	95.2	19.0	112.7	458.8	198.4	71.4	12.7	292.1	266.7	317.5	56.4	64.5	612.8 X 612.8 X 863.6
CH13NA030	A	X	O	O	O	792.2	722.3	95.2	19.0	166.7	627.1	231.8	74.6	15.9	381.0	381.0	292.1	67.7	77.3	817.6 X 817.6 X 777.9
CH13NA036	A,C	X	O	O	O	792.2	808.0	98.4	22.2	166.7	627.1	231.8	74.6	15.9	381.0	381.0	317.5	76.7	85.9	817.6 X 817.6 X 863.6
CH13NA042	A,C	X	O	O	O	792.2	808.0	98.4	22.2	166.7	627.1	231.8	74.6	15.9	381.0	381.0	317.5	81.8	90.9	817.6 X 817.6 X 863.6
CH13NA048	A,C	X	O	O	O	792.2	722.3	98.4	22.2	166.7	627.1	231.8	74.6	15.9	381.0	381.0	292.1	94.5	103.6	817.6 X 817.6 X 777.9
CH13NA060	A,C	X	O	O	O	792.2	808.0	98.4	22.2	166.7	627.1	231.8	74.6	15.9	381.0	381.0	317.5	101.8	112.7	817.6 X 817.6 X 863.6
		208-230-1-60	230-1-60	208/230-3-60	460-3-60															

X = YES
O = NO

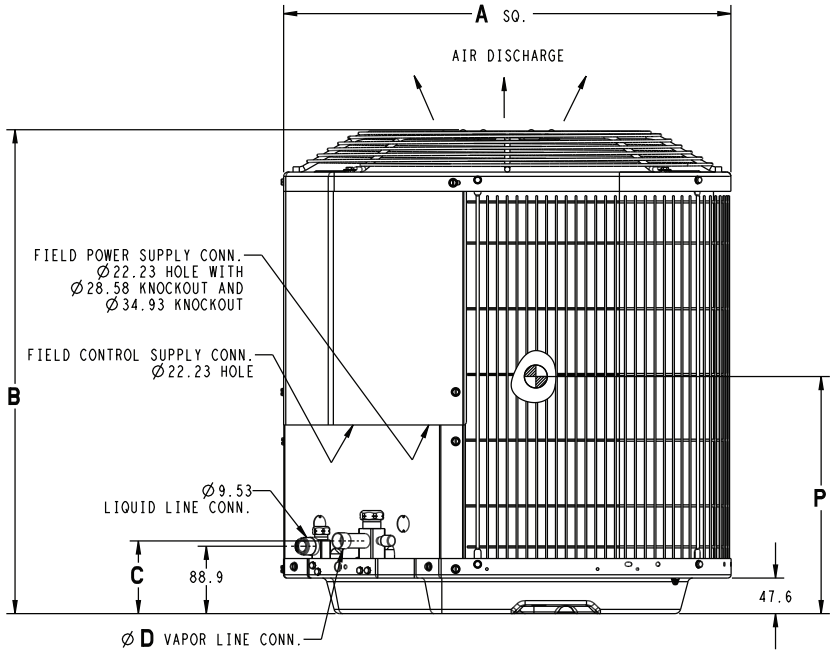

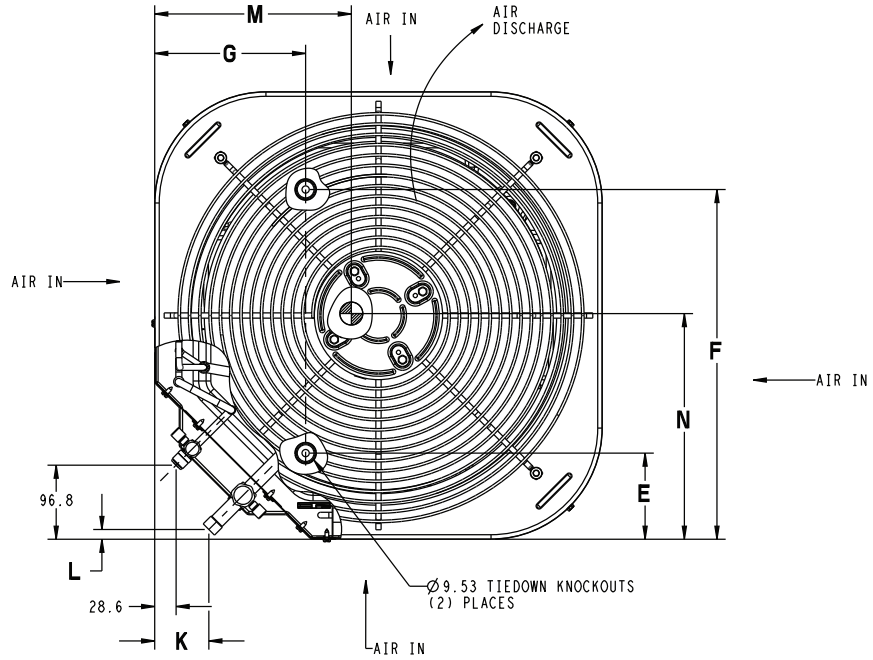

UNIT SIZE	MINIMUM MOUNTING PAD DIMENSIONS
18,24	596.9 X 596.9
--	660.4 X 660.4
30,36,42,48,60	800.1 X 800.1
--	889.0 X 889.0

DIMENSIONS - SI (CONTINUED)

UNIT	SERIES	ELECTRICAL CHARACTERISTICS				A	B	C	D	E	F	G	K	L	M	N	P	OPERATING WEIGHT(Kgs)	SHIPPING WEIGHT(Kgs)	SHIPPING DIMENSIONS (L x W x H)
CH13NA019	B	X	O	O	O	587.4	893.8	95.2	15.8	112.7	458.8	198.4	71.4	12.7	292.1	266.7	342.9	60.9	67.3	612.8 X 612.8 X 944.0
CH13NA025	A,B	X	O	O	O	792.2	722.3	95.2	15.8	166.7	627.1	231.8	71.4	12.7	396.8	425.4	368.3	68.6	77.7	817.9 X 817.9 X 771.3
CH13NA031	A,B	X	O	O	O	792.2	993.8	95.2	19.0	166.7	627.1	231.8	74.6	12.7	396.8	425.4	431.8	78.2	88.2	817.9 X 817.9 X 1030.5
CH13NA037	C	X	O	O	O	792.2	993.8	95.2	19.0	166.7	627.1	231.8	74.6	12.7	396.8	425.4	431.8	82.3	92.3	817.9 X 817.9 X 1030.5
CH13NA043	B	X	O	O	O	792.2	722.3	98.4	22.2	166.7	627.1	231.8	74.6	15.9	381.0	381.0	292.1	94.5	103.6	817.9 X 817.9 X 771.3
CH13NA049	B	X	O	O	O	792.2	808.0	98.4	22.2	166.7	627.1	231.8	74.6	15.9	381.0	381.0	317	101.8	112.7	817.9 X 817.9 X 863.6
CH13NA061	B	X	O	O	O	889.0	735.0	98.4	22.2	166.7	722.3	231.8	74.6	15.9	431.8	406.4	304.8	113.6	128.2	943.1 X 943.1 X 761.6
		208-230-1-60	230-1-60	208/230-3-60	460-3-60															

X = YES
O = NO

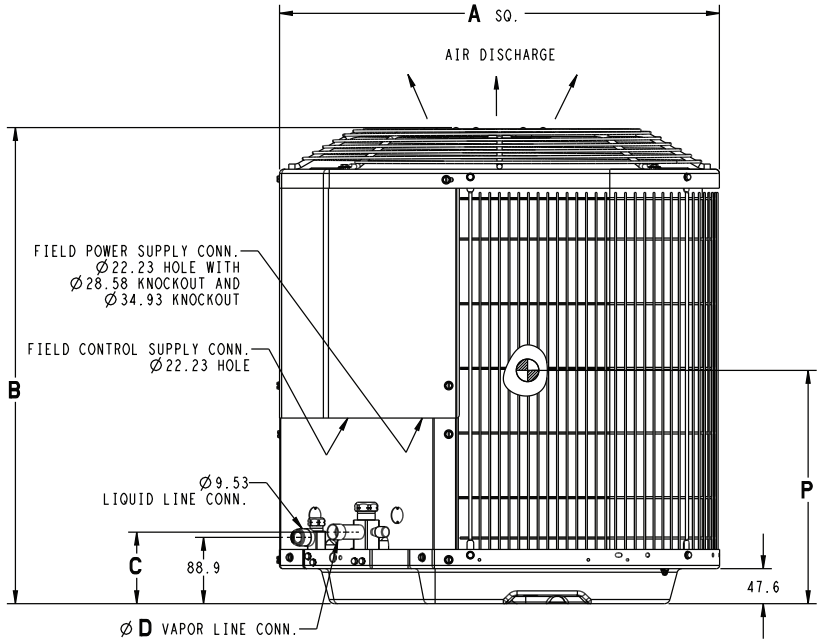

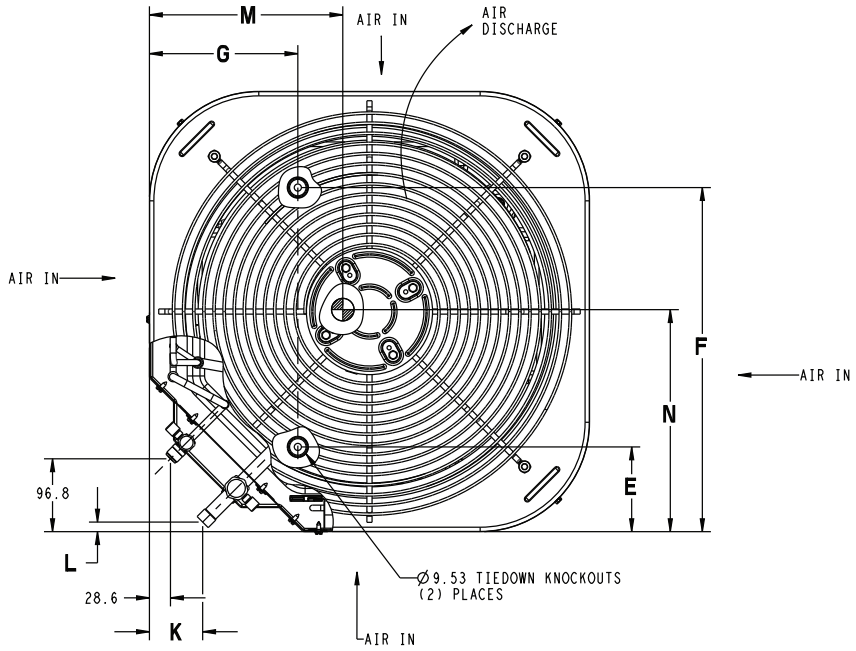

UNIT SIZE	MINIMUM MOUNTING PAD DIMENSIONS
19	596.9 X 596.9
--	660.4 X 660.4
25,31,37,43,49	800.1 X 800.1
61	889.0 X 889.0

BALANCE POINT WORKSHEET

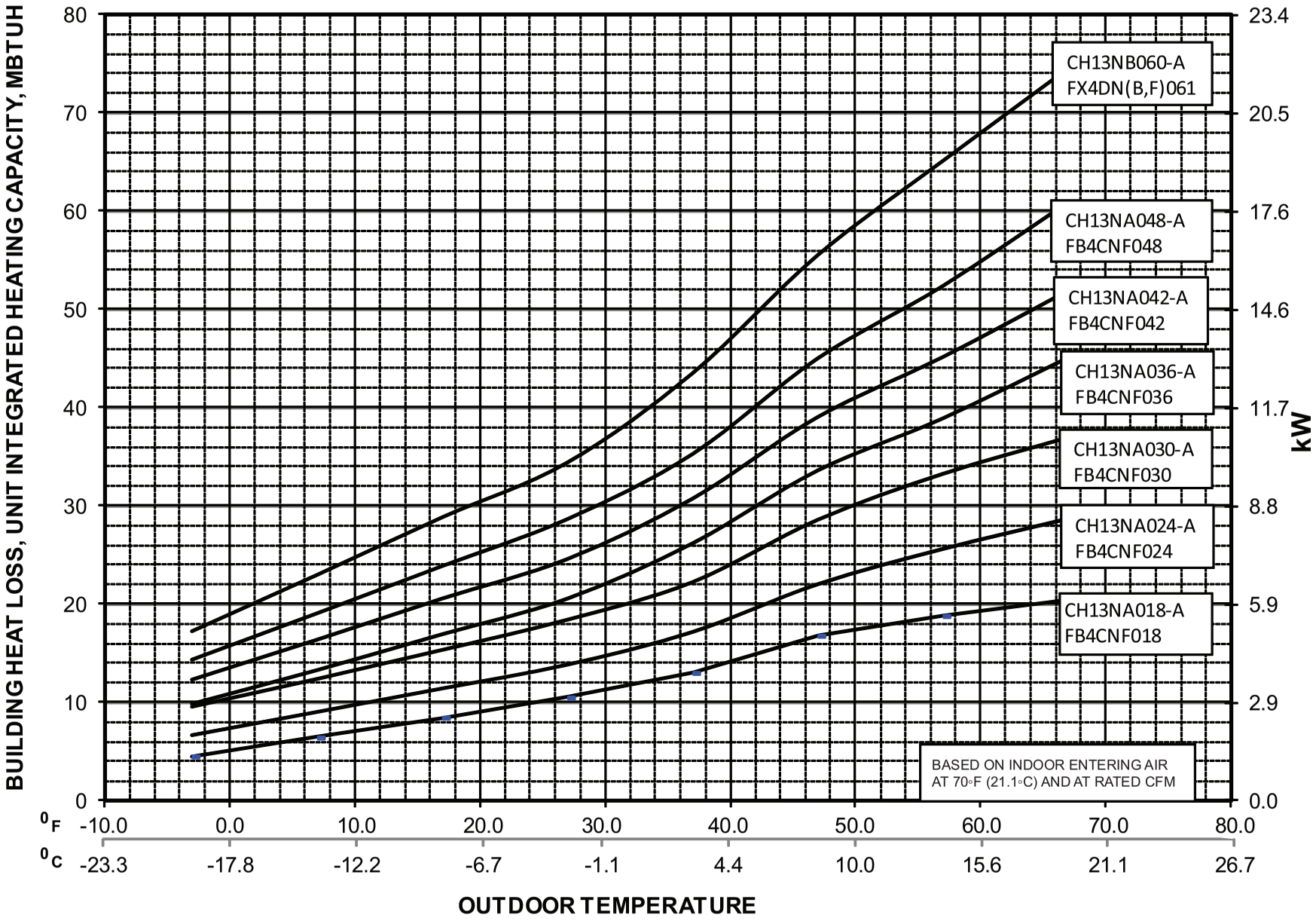

BALANCE POINT WORKSHEET CONTINUED

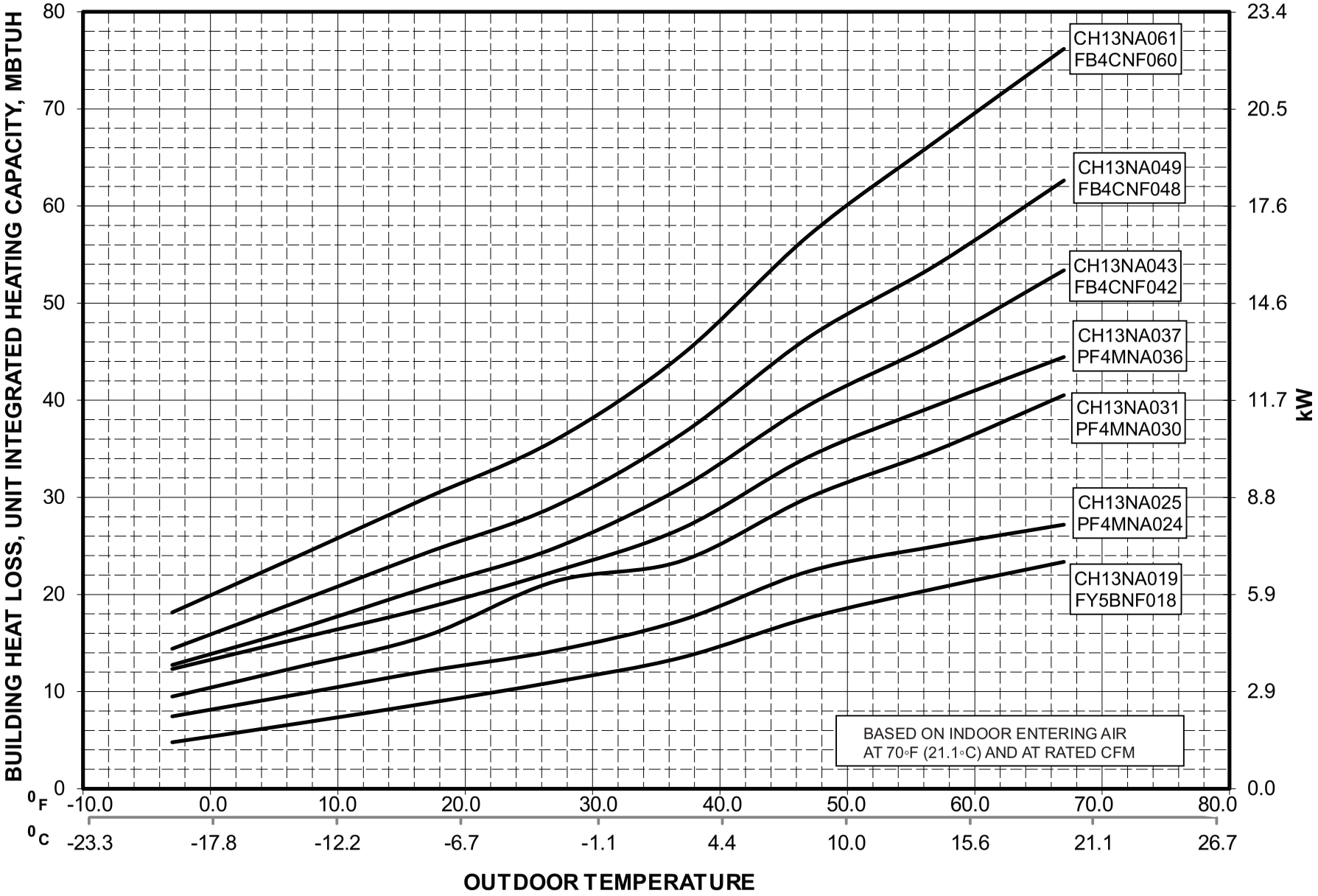

CH13NA

CLEARANCES

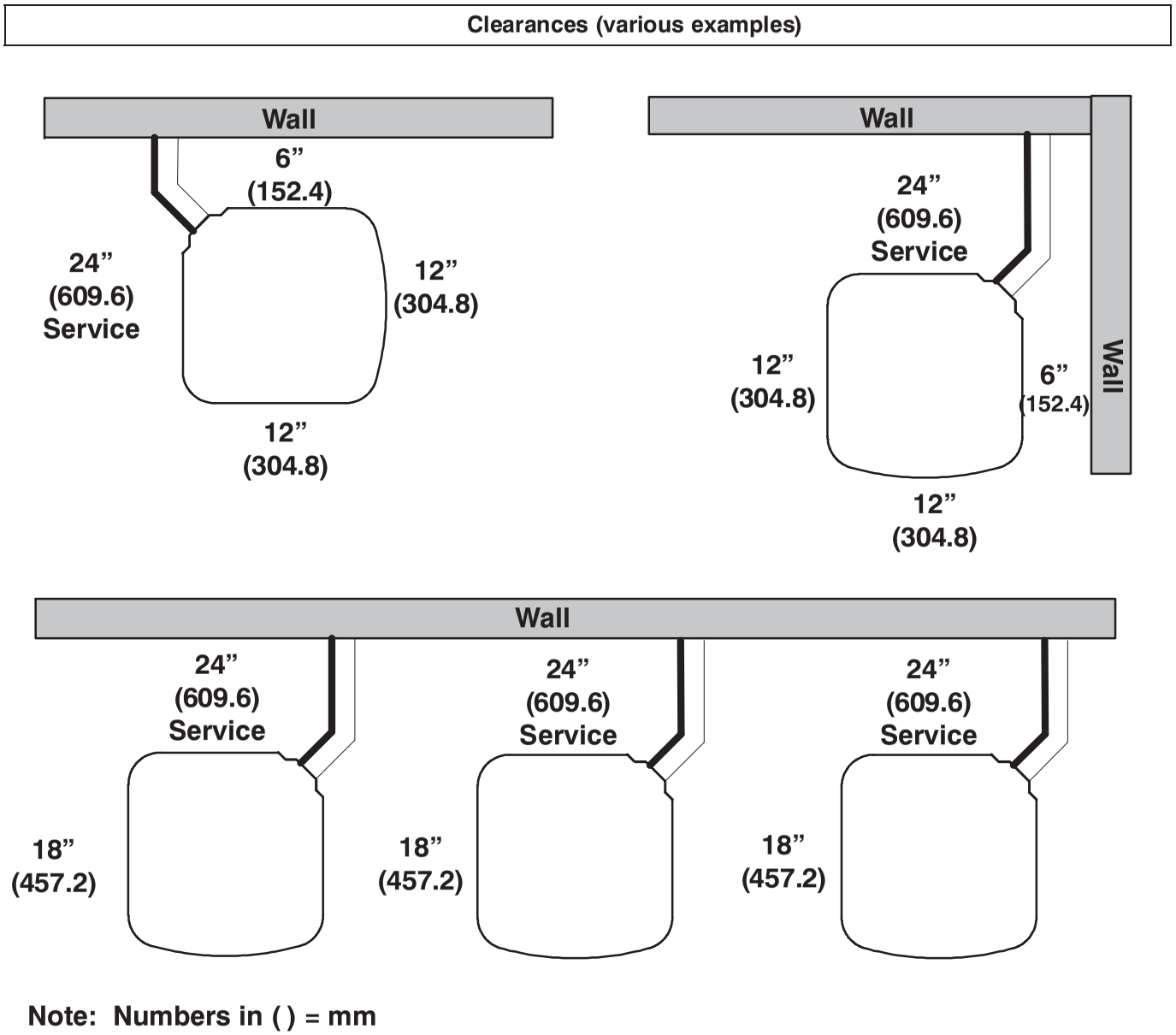

Note: Numbers in ( ) = mm

IMPORTANT: When installing multiple units in an alcove, roof well, or partially enclosed area, ensure there is adequate ventilation to prevent re-circulation of discharge air.

TESTED AHRI COMBINATION RATINGS*

NOTE: Ratings contained in this document are subject to change at any time.

For AHRI ratings certificates, please refer to the AHRI directory www.ahridirectory.org

Additional ratings and system combinations can be accessed via the Carrier database at: www.MyCarrierRatings.com

For performance data at specific application &/or design conditions with various indoor unit combinations, the equipment performance calculator can be accessed at : http://rpmob.wrightsoft.com/

Model Number	Coil Model Number	Furnace Model Number	Cooling Capacity	EER	SEER	High Temp		HSPF	Low Temp	
						Capacity 47°F (8°C)	COP		Capacity 17°F (−8°C)	COP
CH13NA018****A	FB4CNF018		17,400	11.0	13.0	16,600	3.60	7.7	9,400	2.24
CH13NA019****B	FY5BNF018+TXV		17,800	11.2	13.0	17,600	3.60	7.7	10,600	2.34
CH13NA024****A	FB4CNF024		23,400	11.0	13.0	22,000	3.48	7.7	13,000	2.28
CH13NA025****B	PF4MNA030		21,600	10.8	13.0	22,400	3.44	7.7	13,500	2.32
CH13NA030****A	FB4CNF030		28,600	11.0	13.0	28,600	3.50	7.7	17,700	2.34
CH13NA031****B	PF4MNA030		29,400	10.6	13.0	29,600	3.36	7.7	18,500	2.32
CH13NA036****C	FB4CNF036		33,600	11.0	13.0	32,800	3.50	7.7	20,200	2.40
CH13NA037****C	PF4MNA042		34,200	11.0	13.0	34,200	3.50	7.7	22,000	2.44
CH13NA042****C	FB4CNF042		41,500	11.0	13.0	39,000	3.60	8.0	24,400	2.40
CH13NA043****B	FB4CNF042		41,000	11.5	13.0	39,000	3.68	7.7	23,800	2.46
CH13NA048****C	FB4CNF048		47,000	11.0	13.0	45,000	3.48	8.0	28,600	2.44
CH13NA049****B	FB4CNF048		46,000	11.2	13.0	46,000	3.64	7.7	28,200	2.46
CH13NA060****C	FX4DN(B,F)061		57,500	11.0	13.0	54,500	3.64	8.0	35,400	2.56
CH13NA061****B	FB4CNF060		57,000	11.0	13.0	57,000	3.54	7.7	35,400	2.50

* Ratings are net values reflecting the effects of circulating fan heat. Supplemental electric heat is not included. Ratings are based on:
Cooling Standard: 80°F (27°C) db 67°F (19°C) wb indoor entering air temperature and 95°F (35°C) db air entering outdoor unit.
High−Temp Heating Standard: 70°F (21°C) db indoor entering air temperature and 47°F (8°C) db 43°F (6°C) wb air entering outdoor unit.
Low−Temp Heating Standard: 70°F (21°C) db indoor entering air temperature and 17°F (−8°C) db 15°F (−9°C) wb air entering outdoor unit.
COP — Coefficient of Performance
EER — Energy Efficiency Ratio
HSPF — Heating Seasonal Performance Factor
SEER — Seasonal Energy Efficiency Ratio

DETAILED COOLING CAPACITIES*

EVAPORATOR AIR		CONDENSER ENTERING AIR TEMPERATURES °F (°C)																	
		75 (23.9)			85 (29.4)			95 (35)			105 (40.6)			115 (46.1)			125 (51.7)		
CFM	EWB °F (°C)	Capacity MBtuh		Total Sys. KW**	Capacity MBtuh		Total Sys. KW**	Capacity MBtuh		Total Sys. KW**	Capacity MBtuh		Total Sys. KW**	Capacity MBtuh		Total Sys. KW**	Capacity MBtuh		Total Sys. KW**
		Total	Sens‡		Total	Sens‡		Total	Sens‡		Total	Sens‡		Total	Sens‡		Total	Sens‡	
CH13NA018–A Outdoor Section With FB4CNF018 Indoor Section																			
525	57 (13.9)	16.65	16.65	1.22	15.93	15.93	1.37	14.83	14.83	1.52	13.70	13.70	1.70	12.53	12.53	1.90	11.26	11.26	2.13
	62 (16.7)	17.30	15.33	1.22	16.38	14.89	1.37	15.05	14.24	1.52	13.73	13.73	1.70	12.55	12.55	1.90	11.28	11.28	2.13
	63 (17.2)††	17.67	12.51	1.22	16.71	12.09	1.38	15.42	11.53	1.53	13.80	10.84	1.70	12.20	10.17	1.89	10.50	9.46	2.11
	67 (19.4)	19.21	13.04	1.23	18.18	12.64	1.39	17.04	12.18	1.56	15.53	11.58	1.73	13.75	10.89	1.92	11.97	10.20	2.14
	72 (22.2)	21.16	10.63	1.25	20.17	10.28	1.41	19.02	9.88	1.59	17.68	9.38	1.79	16.09	8.82	1.99	14.07	8.12	2.19
600	57 (13.9)	17.43	17.43	1.24	16.66	16.66	1.39	15.79	15.79	1.56	14.44	14.44	1.72	13.17	13.17	1.92	11.83	11.83	2.15
	62 (16.7)	17.78	16.48	1.24	16.83	15.99	1.39	15.81	15.81	1.56	14.46	14.46	1.72	13.20	13.20	1.92	11.85	11.85	2.15
	63 (17.2)††	18.10	13.33	1.24	17.09	12.90	1.39	15.97	12.42	1.56	14.16	11.66	1.71	12.51	10.97	1.91	10.78	10.19	2.13
	67 (19.4)	19.65	13.89	1.25	18.59	13.51	1.41	17.40	13.04	1.58	16.09	12.53	1.77	14.10	11.76	1.94	12.26	11.03	2.16
	72 (22.2)	21.57	11.12	1.26	20.56	10.79	1.43	19.41	10.41	1.61	18.06	9.95	1.80	16.50	9.40	2.02	14.39	8.68	2.21
675	57 (13.9)	18.11	18.11	1.25	17.28	17.28	1.41	16.38	16.38	1.58	15.09	15.09	1.75	13.73	13.73	1.94	12.32	12.32	2.17
	62 (16.7)	18.22	17.49	1.25	17.31	17.31	1.41	16.41	16.41	1.58	15.12	15.12	1.75	13.75	13.75	1.95	12.34	12.34	2.17
	63 (17.2)††	18.46	14.11	1.25	17.39	13.67	1.41	16.24	13.18	1.58	14.48	12.44	1.73	12.78	11.70	1.93	11.09	11.09	2.15
	67 (19.4)	19.98	14.69	1.26	18.91	14.33	1.42	17.69	13.87	1.60	16.35	13.35	1.79	14.38	12.58	1.96	12.51	11.79	2.18
	72 (22.2)	21.88	11.57	1.28	20.86	11.27	1.44	19.69	10.90	1.62	18.34	10.46	1.82	16.73	9.90	2.04	14.63	9.20	2.23

EVAPORATOR AIR		CONDENSER ENTERING AIR TEMPERATURES °F (°C)																	
		75 (23.9)			85 (29.4)			95 (35)			105 (40.6)			115 (46.1)			125 (51.7)		
CFM	EWB °F (°C)	Capacity MBtuh		Total Sys. KW**	Capacity MBtuh		Total Sys. KW**	Capacity MBtuh		Total Sys. KW**	Capacity MBtuh		Total Sys. KW**	Capacity MBtuh		Total Sys. KW**	Capacity MBtuh		Total Sys. KW**
		Total	Sens‡		Total	Sens‡		Total	Sens‡		Total	Sens‡		Total	Sens‡		Total	Sens‡	
CH13NA019–A Outdoor Section With FY5BNF018 Indoor Section																			
525	72 (22.2)	21.50	10.43	1.23	20.44	10.04	1.40	19.33	9.64	1.57	18.16	9.23	1.77	16.91	8.80	1.99	15.59	8.35	2.25
	67 (19.4)	19.46	12.79	1.23	18.51	12.40	1.39	17.48	12.00	1.57	16.40	11.58	1.76	15.25	11.14	1.98	14.04	10.68	2.24
	63 (17.2)††	17.97	12.27	1.23	17.09	11.89	1.39	16.14	11.49	1.56	15.13	11.07	1.76	14.05	10.62	1.98	12.91	10.16	2.24
	62 (16.7)	17.60	15.07	1.23	16.75	14.68	1.38	15.84	14.25	1.56	14.88	13.79	1.76	13.94	13.94	1.98	13.04	13.04	2.24
	57 (13.9)	16.91	16.91	1.23	16.24	16.24	1.38	15.52	15.52	1.56	14.75	14.75	1.76	13.91	13.91	1.98	13.02	13.02	2.23
600	72 (22.2)	21.93	10.94	1.26	20.83	10.55	1.42	19.66	10.14	1.60	18.44	9.72	1.79	17.15	9.28	2.02	15.79	8.83	2.27
	67 (19.4)	19.88	13.62	1.25	18.87	13.23	1.41	17.80	12.82	1.59	16.68	12.39	1.78	15.48	11.93	2.01	14.24	11.46	2.26
	63 (17.2)††	18.37	13.05	1.25	17.44	12.66	1.41	16.46	12.25	1.58	15.40	11.82	1.78	14.28	11.36	2.00	13.11	10.88	2.26
	62 (16.7)	18.04	16.18	1.25	17.16	15.75	1.41	16.25	16.16	1.58	15.37	15.37	1.78	14.48	14.48	2.00	13.52	13.52	2.26
	57 (13.9)	17.67	17.67	1.25	16.95	16.95	1.41	16.18	16.18	1.58	15.35	15.35	1.78	14.46	14.46	2.00	13.50	13.50	2.26
675	72 (22.2)	22.26	11.42	1.28	21.11	11.02	1.44	19.91	10.61	1.62	18.65	10.19	1.82	17.32	9.74	2.04	15.92	9.28	2.30
	67 (19.4)	20.18	14.41	1.28	19.14	14.01	1.44	18.03	13.59	1.61	16.88	13.15	1.81	15.66	12.68	2.03	14.38	12.19	2.29
	63 (17.2)††	18.68	13.80	1.27	17.71	13.39	1.43	16.68	12.97	1.61	15.60	12.52	1.80	14.45	12.05	2.03	13.26	11.54	2.28
	62 (16.7)	18.43	17.16	1.27	17.57	17.57	1.43	16.74	16.74	1.61	15.86	15.86	1.80	14.91	14.91	2.03	13.90	13.90	2.28
	57 (13.9)	18.31	18.31	1.27	17.54	17.54	1.43	16.72	16.72	1.61	15.84	15.84	1.80	14.90	14.90	2.03	13.89	13.89	2.28

See notes on pg. 22

DETAILED COOLING CAPACITIES* (CONT.)

EVAPORATOR AIR		CONDENSER ENTERING AIR TEMPERATURES °F (°C)																	
		75 (23.9)			85 (29.4)			95 (35)			105 (40.6)			115 (46.1)			125 (51.7)		
CFM	EWB °F (°C)	Capacity MBtuh		Total Sys. KW**	Capacity MBtuh		Total Sys. KW**	Capacity MBtuh		Total Sys. KW**	Capacity MBtuh		Total Sys. KW**	Capacity MBtuh		Total Sys. KW**	Capacity MBtuh		Total Sys. KW**
		Total	Sens‡		Total	Sens‡		Total	Sens‡		Total	Sens‡		Total	Sens‡		Total	Sens‡	
CH13NA024–A Outdoor Section With FB4CNF024 Indoor Section																			
700	57 (13.9)	22.27	22.27	1.62	21.36	21.36	1.82	20.01	20.01	2.01	18.55	18.55	2.25	17.03	17.03	2.51	15.40	15.40	2.81
	62 (16.7)	23.17	20.79	1.63	22.02	20.23	1.83	20.58	19.52	2.03	18.58	18.58	2.25	17.06	17.06	2.51	15.42	15.42	2.81
	63 (17.2)††	23.65	16.96	1.63	22.45	16.42	1.83	21.09	15.82	2.05	18.86	14.86	2.25	16.76	13.96	2.50	14.55	13.00	2.79
	67 (19.4)	25.62	17.65	1.66	24.33	17.13	1.86	22.96	16.57	2.09	21.15	15.84	2.32	18.89	14.94	2.55	16.55	14.01	2.83
	72 (22.2)	28.04	14.27	1.70	26.88	13.86	1.91	25.54	13.37	2.14	23.99	12.83	2.40	22.07	12.12	2.68	19.47	11.20	2.92
800	57 (13.9)	23.24	23.24	1.65	22.28	22.28	1.86	21.18	21.18	2.08	19.52	19.52	2.29	17.86	17.86	2.55	16.14	16.14	2.85
	62 (16.7)	23.74	22.26	1.66	22.55	21.65	1.86	21.23	21.23	2.08	19.55	19.55	2.29	17.89	17.89	2.55	16.17	16.17	2.85
	63 (17.2)††	24.17	18.01	1.67	22.92	17.47	1.87	21.53	16.86	2.08	19.35	15.93	2.29	17.13	14.97	2.54	14.90	13.98	2.82
	67 (19.4)	26.14	18.72	1.69	24.87	18.26	1.90	23.40	17.68	2.13	21.78	17.03	2.37	19.36	16.08	2.59	16.93	15.10	2.87
	72 (22.2)	28.50	14.87	1.73	27.33	14.48	1.94	25.98	14.01	2.17	24.43	13.49	2.43	22.48	12.81	2.71	19.90	11.92	2.97
900	57 (13.9)	24.05	24.05	1.69	23.03	23.03	1.89	21.91	21.91	2.12	20.37	20.37	2.34	18.61	18.61	2.60	16.76	16.76	2.89
	62 (16.7)	24.25	23.56	1.69	23.07	23.07	1.89	21.94	21.94	2.12	20.40	20.40	2.34	18.64	18.64	2.60	16.81	16.81	2.89
	63 (17.2)††	24.60	19.04	1.69	23.29	18.48	1.90	21.88	17.87	2.12	19.70	16.93	2.32	17.49	15.95	2.57	15.23	14.83	2.85
	67 (19.4)	26.54	19.73	1.72	25.26	19.31	1.93	23.76	18.77	2.16	22.10	18.10	2.41	19.74	17.16	2.63	17.27	16.11	2.90
	72 (22.2)	28.85	15.42	1.76	27.68	15.06	1.97	26.31	14.61	2.20	24.75	14.11	2.46	22.87	13.52	2.74	20.25	12.62	3.01

EVAPORATOR AIR		CONDENSER ENTERING AIR TEMPERATURES °F (°C)																	
		75 (23.9)			85 (29.4)			95 (35)			105 (40.6)			115 (46.1)			125 (51.7)		
CFM	EWB °F (°C)	Capacity MBtuh		Total Sys. KW**	Capacity MBtuh		Total Sys. KW**	Capacity MBtuh		Total Sys. KW**	Capacity MBtuh		Total Sys. KW**	Capacity MBtuh		Total Sys. KW**	Capacity MBtuh		Total Sys. KW**
		Total	Sens‡		Total	Sens‡		Total	Sens‡		Total	Sens‡		Total	Sens‡		Total	Sens‡	
CH13NB025–B Outdoor Section With FY4ANF030 Indoor Section																			
700	72 (22.2)	26.47	13.36	1.61	25.18	12.88	1.80	23.83	12.38	2.01	22.40	11.87	2.23	20.88	11.33	2.49	19.28	10.77	2.77
	67 (19.4)	24.01	16.53	1.61	22.84	16.05	1.80	21.60	15.55	2.00	20.29	15.03	2.22	18.91	14.48	2.48	17.44	13.91	2.76
	63 (17.2)††	22.23	15.88	1.61	21.15	15.41	1.79	20.00	14.90	2.00	18.78	14.38	2.22	17.49	13.83	2.47	16.12	13.25	2.76
	62 (16.7)	21.81	19.61	1.61	20.76	19.11	1.79	19.67	18.57	2.00	18.53	18.40	2.22	17.45	17.45	2.47	16.34	16.34	2.76
	57 (13.9)	21.12	21.12	1.61	20.29	20.29	1.80	19.40	19.40	2.00	18.45	18.45	2.22	17.42	17.42	2.47	16.31	16.31	2.76
800	72 (22.2)	26.94	14.00	1.64	25.60	13.52	1.84	24.18	13.02	2.04	22.69	12.49	2.27	21.13	11.95	2.53	19.47	11.38	2.81
	67 (19.4)	24.45	17.60	1.64	23.22	17.11	1.83	21.93	16.60	2.04	20.57	16.07	2.26	19.14	15.50	2.51	17.63	14.91	2.80
	63 (17.2)††	22.66	16.88	1.65	21.52	16.39	1.83	20.32	15.88	2.03	19.05	15.34	2.26	17.72	14.77	2.51	16.31	14.17	2.80
	62 (16.7)	22.29	21.01	1.65	21.23	20.44	1.83	20.17	20.17	2.03	19.15	19.15	2.26	18.05	18.05	2.51	16.87	16.87	2.80
	57 (13.9)	21.98	21.98	1.65	21.09	21.09	1.83	20.14	20.14	2.03	19.12	19.12	2.26	18.03	18.03	2.51	16.85	16.85	2.79
900	72 (22.2)	27.28	14.62	1.68	25.89	14.13	1.87	24.43	13.61	2.08	22.90	13.08	2.31	21.30	12.53	2.57	19.59	11.96	2.85
	67 (19.4)	24.77	18.62	1.68	23.50	18.12	1.87	22.17	17.60	2.07	20.78	17.05	2.30	19.31	16.47	2.55	17.77	15.84	2.84
	63 (17.2)††	22.97	17.82	1.68	21.80	17.32	1.87	20.56	16.80	2.07	19.26	16.24	2.29	17.89	15.66	2.54	16.45	15.02	2.83
	62 (16.7)	22.74	22.74	1.68	21.79	21.79	1.87	20.78	20.78	2.07	19.69	19.69	2.29	18.54	18.54	2.55	17.29	17.29	2.83
	57 (13.9)	22.70	22.70	1.68	21.76	21.76	1.87	20.75	20.75	2.07	19.67	19.67	2.29	18.52	18.52	2.55	17.28	17.28	2.83

See notes on pg. 22

DETAILED COOLING CAPACITIES* (CONT.)

EVAPORATOR AIR		CONDENSER ENTERING AIR TEMPERATURES °F (°C)																	
		75 (23.9)			85 (29.4)			95 (35)			105 (40.6)			115 (46.1)			125 (51.7)		
CFM	EWB °F (°C)	Capacity MBtuh		Total Sys. KW**	Capacity MBtuh		Total Sys. KW**	Capacity MBtuh		Total Sys. KW**	Capacity MBtuh		Total Sys. KW**	Capacity MBtuh		Total Sys. KW**	Capacity MBtuh		Total Sys. KW**
		Total	Sens‡		Total	Sens‡		Total	Sens‡		Total	Sens‡		Total	Sens‡		Total	Sens‡	
CH13NA030–A Outdoor Section With FB4CNF030 Indoor Section																			
875	57 (13.9)	27.18	27.18	2.02	26.03	26.03	2.24	24.78	24.78	2.50	23.39	23.39	2.79	21.45	21.45	3.07	19.49	19.49	3.42
	62 (16.7)	28.44	24.01	2.03	26.96	23.33	2.25	25.36	22.59	2.51	23.65	21.76	2.79	21.48	21.48	3.07	19.54	19.54	3.42
	63 (17.2)††	29.05	19.61	2.04	27.50	18.95	2.26	25.87	18.25	2.52	24.07	17.50	2.80	21.55	16.47	3.07	18.91	15.40	3.40
	67 (19.4)	31.49	20.43	2.07	29.83	19.77	2.30	28.06	19.07	2.55	26.17	18.34	2.85	24.14	17.56	3.17	21.41	16.53	3.49
	72 (22.2)	34.60	16.62	2.11	33.02	16.06	2.34	31.22	15.43	2.60	29.22	14.74	2.91	26.97	13.94	3.25	24.63	13.15	3.63
1000	57 (13.9)	28.38	28.38	2.07	27.13	27.13	2.29	25.81	25.81	2.55	24.36	24.36	2.85	22.72	22.72	3.17	20.47	20.47	3.49
	62 (16.7)	29.14	25.72	2.08	27.59	24.98	2.30	25.98	24.14	2.55	24.40	24.40	2.85	22.76	22.76	3.17	20.51	20.51	3.49
	63 (17.2)††	29.71	20.82	2.08	28.09	20.14	2.30	26.36	19.42	2.56	24.52	18.67	2.85	22.11	17.68	3.13	19.33	16.54	3.45
	67 (19.4)	32.16	21.66	2.11	30.48	21.06	2.34	28.60	20.33	2.60	26.61	19.58	2.89	24.55	18.80	3.22	21.98	17.83	3.56
	72 (22.2)	35.21	17.30	2.15	33.61	16.78	2.38	31.78	16.17	2.65	29.75	15.50	2.95	27.51	14.76	3.29	25.00	13.90	3.68
1125	57 (13.9)	29.38	29.38	2.12	28.07	28.07	2.34	26.66	26.66	2.60	25.15	25.15	2.90	23.48	23.48	3.23	21.30	21.30	3.56
	62 (16.7)	29.75	27.27	2.12	28.15	28.15	2.34	26.70	26.70	2.60	25.18	25.18	2.90	23.51	23.51	3.23	21.34	21.34	3.56
	63 (17.2)††	30.21	21.97	2.12	28.53	21.28	2.35	26.75	20.55	2.60	24.84	19.77	2.89	22.76	18.90	3.20	19.71	17.60	3.50
	67 (19.4)	32.67	22.83	2.15	30.96	22.26	2.38	29.01	21.55	2.64	26.97	20.78	2.94	24.86	19.98	3.27	22.48	19.05	3.63
	72 (22.2)	35.66	17.95	2.19	34.05	17.45	2.42	32.19	16.87	2.69	30.14	16.21	2.99	27.89	15.49	3.33	25.30	14.64	3.72

EVAPORATOR AIR		CONDENSER ENTERING AIR TEMPERATURES °F (°C)																	
		75 (23.9)			85 (29.4)			95 (35)			105 (40.6)			115 (46.1)			125 (51.7)		
CFM	EWB °F (°C)	Capacity MBtuh		Total Sys KW**	Capacity MBtuh		Total Sys KW**	Capacity MBtuh		Total Sys KW**	Capacity MBtuh		Total Sys KW**	Capacity MBtuh		Total Sys KW**	Capacity MBtuh		Total Sys KW**
		Total	Sens‡		Total	Sens‡		Total	Sens‡		Total	Sens‡		Total	Sens‡		Total	Sens‡	
CH13NA031–A Outdoor Section With PF4MNA030 Indoor Section																			
875	72 (22.2)	35.86	18.40	2.27	34.17	17.74	2.52	32.37	17.04	2.78	30.46	16.30	3.09	28.41	15.53	3.43	26.21	14.72	3.82
	67 (19.4)	32.58	22.54	2.25	31.04	21.87	2.49	29.40	21.17	2.76	27.66	20.43	3.06	25.78	19.65	3.41	23.79	18.83	3.81
	63 (17.2)††	30.19	21.70	2.24	28.76	21.03	2.48	27.24	20.33	2.75	25.62	19.59	3.05	23.88	18.82	3.39	22.02	17.99	3.79
	62 (16.7)	29.58	26.56	2.24	28.20	25.88	2.48	26.73	25.15	2.74	25.18	24.36	3.04	23.54	23.46	3.39	21.92	21.92	3.79
	57 (13.9)	28.19	28.19	2.24	27.12	27.12	2.47	25.97	25.97	2.74	24.71	24.71	3.04	23.37	23.37	3.39	21.89	21.89	3.79
1000	72 (22.2)	36.55	19.23	2.32	34.79	18.55	2.57	32.90	17.84	2.83	30.91	17.09	3.14	28.78	16.31	3.48	26.49	15.47	3.87
	67 (19.4)	33.23	23.90	2.30	31.62	23.22	2.55	29.90	22.50	2.81	28.08	21.75	3.11	26.13	20.95	3.46	24.06	20.10	3.85
	63 (17.2)††	30.81	22.97	2.29	29.32	22.29	2.53	27.72	21.57	2.80	26.03	20.82	3.10	24.22	20.02	3.44	22.29	19.16	3.84
	62 (16.7)	30.25	28.40	2.29	28.81	27.66	2.53	27.30	26.86	2.79	25.70	25.70	3.09	24.23	24.23	3.44	22.65	22.65	3.84
	57 (13.9)	29.36	29.36	2.29	28.21	28.21	2.52	26.97	26.97	2.79	25.64	25.64	3.10	24.19	24.19	3.44	22.62	22.62	3.84
1125	72 (22.2)	37.09	20.02	2.37	35.25	19.33	2.62	33.30	18.60	2.89	31.24	17.84	3.19	29.04	17.05	3.53	26.71	16.21	3.92
	67 (19.4)	33.73	25.21	2.35	32.06	24.52	2.60	30.27	23.78	2.86	28.39	23.01	3.16	26.38	22.19	3.51	24.27	21.31	3.90
	63 (17.2)††	31.30	24.19	2.34	29.74	23.49	2.58	28.09	22.76	2.85	26.34	21.98	3.15	24.47	21.15	3.49	22.50	20.27	3.89
	62 (16.7)	30.80	30.07	2.34	29.35	29.24	2.58	27.85	27.85	2.84	26.42	26.42	3.15	24.89	24.89	3.49	23.23	23.23	3.90
	57 (13.9)	30.34	30.34	2.34	29.12	29.12	2.58	27.80	27.80	2.84	26.39	26.39	3.15	24.87	24.87	3.50	23.20	23.20	3.89

See notes on pg. 22

DETAILED COOLING CAPACITIES* (CONT.)

EVAPORATOR AIR		CONDENSER ENTERING AIR TEMPERATURES °F (°C)																	
		75 (23.9)			85 (29.4)			95 (35)			105 (40.6)			115 (46.1)			125 (51.7)		
CFM	EWB °F (°C)	Capacity MBtuh		Total Sys. KW**	Capacity MBtuh		Total Sys. KW**	Capacity MBtuh		Total Sys. KW**	Capacity MBtuh		Total Sys. KW**	Capacity MBtuh		Total Sys. KW**	Capacity MBtuh		Total Sys. KW**
		Total	Sens‡		Total	Sens‡		Total	Sens‡		Total	Sens‡		Total	Sens‡		Total	Sens‡	
CH13NA036–C Outdoor Section With FB4CNF036 Indoor Section																			
1050	57 (13.9)	31.95	31.95	2.39	30.67	30.67	2.65	29.29	29.29	2.94	27.80	27.80	3.26	25.76	25.76	3.59	23.48	23.48	3.99
	62 (16.7)	33.18	28.52	2.41	31.56	27.77	2.66	29.84	26.94	2.95	28.01	26.01	3.27	25.81	25.81	3.60	23.53	23.53	3.99
	63 (17.2)††	33.87	23.22	2.42	32.19	22.50	2.67	30.39	21.74	2.95	28.45	20.94	3.28	25.81	19.85	3.59	22.68	18.58	3.97
	67 (19.4)	36.68	24.14	2.44	34.92	23.49	2.71	32.98	22.73	3.00	30.94	21.95	3.32	28.72	21.10	3.70	25.84	20.01	4.06
	72 (22.2)	40.08	19.42	2.48	38.56	18.94	2.75	36.71	18.31	3.04	34.58	17.59	3.38	32.09	16.72	3.77	29.53	15.84	4.21
1200	57 (13.9)	33.27	33.27	2.45	31.91	31.91	2.71	30.46	30.46	3.00	28.89	28.89	3.33	27.12	27.12	3.70	24.64	24.64	4.06
	62 (16.7)	33.98	30.51	2.46	32.31	29.67	2.72	30.54	30.54	3.00	28.93	28.93	3.33	27.16	27.16	3.70	24.68	24.68	4.07
	63 (17.2)††	34.60	24.67	2.47	32.85	23.94	2.72	30.97	23.16	3.01	28.97	22.34	3.33	26.70	21.41	3.69	23.25	19.97	4.02
	67 (19.4)	37.41	25.60	2.49	35.66	25.04	2.76	33.60	24.27	3.05	31.47	23.46	3.38	29.19	22.59	3.75	26.62	21.61	4.16
	72 (22.2)	40.70	20.22	2.53	39.19	19.78	2.79	37.34	19.19	3.09	35.20	18.50	3.43	32.76	17.71	3.82	29.95	16.76	4.27
1350	57 (13.9)	34.39	34.39	2.51	32.97	32.97	2.77	31.42	31.42	3.06	29.79	29.79	3.39	27.97	27.97	3.77	25.68	25.68	4.15
	62 (16.7)	34.71	32.24	2.51	33.03	33.03	2.77	31.46	31.46	3.06	29.82	29.82	3.39	28.01	28.01	3.77	25.72	25.72	4.16
	63 (17.2)††	35.21	26.05	2.52	33.35	25.30	2.77	31.40	24.50	3.06	29.36	23.65	3.38	27.07	22.70	3.74	23.69	21.22	4.08
	67 (19.4)	37.95	26.97	2.54	36.17	26.43	2.81	34.08	25.72	3.10	31.88	24.88	3.43	29.55	23.99	3.81	26.96	22.97	4.22
	72 (22.2)	41.12	20.88	2.57	39.64	20.53	2.84	37.79	20.00	3.14	35.64	19.34	3.48	33.18	18.58	3.87	30.35	17.66	4.31

EVAPORATOR AIR		CONDENSER ENTERING AIR TEMPERATURES °F (°C)																	
		75 (23.9)			85 (29.4)			95 (35)			105 (40.6)			115 (46.1)			125 (51.7)		
CFM	EWB °F (°C)	Capacity MBtuh		Total Sys KW**	Capacity MBtuh		Total Sys KW**	Capacity MBtuh		Total Sys KW**	Capacity MBtuh		Total Sys KW**	Capacity MBtuh		Total Sys KW**	Capacity MBtuh		Total Sys KW**
		Total	Sens‡		Total	Sens‡		Total	Sens‡		Total	Sens‡		Total	Sens‡		Total	Sens‡	
CH13NA037–C Outdoor Section With PF4MNA042 Indoor Section																			
1050	72 (22.2)	42.19	21.24	2.61	39.92	20.39	2.85	37.69	19.57	3.13	35.41	18.74	3.44	32.97	17.86	3.80	30.31	16.92	4.21
	67 (19.4)	38.28	26.30	2.59	36.22	25.45	2.83	34.20	24.62	3.11	32.13	23.79	3.43	29.92	22.91	3.79	27.48	21.94	4.21
	63 (17.2)††	35.45	25.27	2.58	33.53	24.42	2.82	31.66	23.60	3.10	29.75	22.77	3.42	27.69	21.89	3.79	25.42	20.92	4.21
	62 (16.7)	34.77	31.21	2.57	32.91	30.32	2.82	31.13	29.45	3.10	29.33	28.49	3.42	27.58	27.58	3.79	25.73	25.73	4.21
	57 (13.9)	33.56	33.56	2.57	32.10	32.10	2.82	30.66	30.66	3.09	29.17	29.17	3.42	27.54	27.54	3.79	25.70	25.70	4.21
1200	72 (22.2)	42.92	22.23	2.68	40.54	21.37	2.92	38.22	20.53	3.20	35.84	19.68	3.51	33.32	18.80	3.87	30.56	17.84	4.28
	67 (19.4)	38.97	27.97	2.66	36.80	27.10	2.90	34.69	26.25	3.18	32.54	25.40	3.49	30.24	24.49	3.86	27.74	23.50	4.27
	63 (17.2)††	36.11	26.82	2.64	34.10	25.95	2.89	32.15	25.11	3.16	30.15	24.25	3.48	28.03	23.35	3.85	25.69	22.34	4.27
	62 (16.7)	35.51	33.43	2.64	33.61	32.44	2.89	31.85	31.85	3.16	30.24	30.24	3.48	28.49	28.49	3.85	26.53	26.53	4.27
	57 (13.9)	34.92	34.92	2.64	33.35	33.35	2.88	31.80	31.80	3.16	30.20	30.20	3.48	28.46	28.46	3.85	26.50	26.50	4.27
1350	72 (22.2)	43.44	23.17	2.75	40.99	22.29	2.99	38.58	21.44	3.26	36.13	20.58	3.58	33.54	19.69	3.93	30.71	18.72	4.34
	67 (19.4)	39.46	29.56	2.72	37.22	28.66	2.97	35.04	27.80	3.24	32.82	26.92	3.56	30.47	25.98	3.92	27.91	24.94	4.34
	63 (17.2)††	36.59	28.29	2.71	34.51	27.40	2.95	32.49	26.54	3.23	30.44	25.66	3.55	28.26	24.71	3.92	25.87	23.66	4.34
	62 (16.7)	36.18	35.96	2.71	34.42	34.42	2.95	32.77	32.77	3.23	31.07	31.07	3.55	29.22	29.22	3.92	27.16	27.16	4.34
	57 (13.9)	36.04	36.04	2.71	34.37	34.37	2.95	32.73	32.73	3.23	31.03	31.03	3.55	29.19	29.19	3.92	27.12	27.12	4.34

See notes on pg. 22

DETAILED COOLING CAPACITIES* (CONT.)

EVAPORATOR AIR		CONDENSER ENTERING AIR TEMPERATURES °F (°C)																	
		75 (23.9)			85 (29.4)			95 (35)			105 (40.6)			115 (46.1)			125 (51.7)		
CFM	EWB °F (°C)	Capacity MBtuh		Total Sys. KW**	Capacity MBtuh		Total Sys. KW**	Capacity MBtuh		Total Sys. KW**	Capacity MBtuh		Total Sys. KW**	Capacity MBtuh		Total Sys. KW**	Capacity MBtuh		Total Sys. KW**
		Total	Sens‡		Total	Sens‡		Total	Sens‡		Total	Sens‡		Total	Sens‡		Total	Sens‡	
CH13NA042–C Outdoor Section With FB4CNF042 Indoor Section																			
1225	57 (13.9)	39.37	39.37	3.01	37.75	37.75	3.34	36.03	36.03	3.69	34.20	34.20	4.07	31.58	31.58	4.44	28.93	28.93	4.89
	62 (16.7)	41.08	37.19	3.01	38.99	36.16	3.34	36.82	35.06	3.70	34.58	33.87	4.08	31.64	31.64	4.44	28.98	28.98	4.89
	63 (17.2)††	41.94	30.35	3.01	39.77	29.36	3.34	37.53	28.35	3.70	35.15	27.30	4.09	31.79	25.83	4.45	28.16	24.25	4.86
	67 (19.4)	45.43	31.55	2.98	43.16	30.64	3.34	40.70	29.62	3.72	38.18	28.58	4.12	35.48	27.48	4.56	31.93	26.05	4.98
	72 (22.2)	49.74	25.53	2.94	47.65	24.77	3.32	45.25	23.90	3.72	42.59	22.96	4.15	39.57	21.82	4.63	36.47	20.70	5.14
1400	57 (13.9)	41.05	41.05	3.05	39.30	39.30	3.39	37.49	37.49	3.75	35.56	35.56	4.14	33.40	33.40	4.57	30.34	30.34	4.98
	62 (16.7)	42.10	39.81	3.05	39.92	38.67	3.39	37.73	37.39	3.75	35.61	35.61	4.14	33.44	33.44	4.57	30.39	30.39	4.98
	63 (17.2)††	42.91	32.24	3.04	40.63	31.23	3.39	38.26	30.19	3.75	35.81	29.11	4.14	32.72	27.77	4.53	28.86	26.06	4.93
	67 (19.4)	46.38	33.45	3.02	44.09	32.65	3.38	41.50	31.60	3.77	38.83	30.53	4.18	36.08	29.42	4.62	32.97	28.16	5.09
	72 (22.2)	50.61	26.60	2.98	48.50	25.87	3.36	46.07	25.05	3.76	43.36	24.14	4.20	40.38	23.11	4.68	37.02	21.88	5.20
1575	57 (13.9)	42.49	42.49	3.09	40.64	40.64	3.44	38.70	38.70	3.80	36.67	36.67	4.20	34.47	34.47	4.64	31.57	31.57	5.07
	62 (16.7)	43.00	42.10	3.09	40.76	40.76	3.44	38.75	38.75	3.80	36.71	36.71	4.20	34.51	34.51	4.64	31.63	31.63	5.07
	63 (17.2)††	43.68	34.03	3.08	41.28	33.00	3.44	38.83	31.93	3.80	36.30	30.82	4.20	33.52	29.59	4.62	29.39	27.70	5.00
	67 (19.4)	47.08	35.20	3.05	44.76	34.43	3.42	42.12	33.50	3.82	39.37	32.39	4.23	36.51	31.23	4.68	33.42	29.94	5.16
	72 (22.2)	51.25	27.56	3.02	49.14	26.89	3.39	46.67	26.10	3.81	43.93	25.24	4.25	40.90	24.23	4.73	37.53	23.06	5.25

EVAPORATOR AIR		CONDENSER ENTERING AIR TEMPERATURES °F (°C)																	
		75 (23.9)			85 (29.4)			95 (35)			105 (40.6)			115 (46.1)			125 (51.7)		
CFM	EWB °F (°C)	Capacity MBtuh		Total Sys KW**	Capacity MBtuh		Total Sys KW**	Capacity MBtuh		Total Sys KW**	Capacity MBtuh		Total Sys KW**	Capacity MBtuh		Total Sys KW**	Capacity MBtuh		Total Sys KW**
		Total	Sens‡		Total	Sens‡		Total	Sens‡		Total	Sens‡		Total	Sens‡		Total	Sens‡	
CH13NA043–B Outdoor Section With FB4CNF042 Indoor Section																			
1225	72 (22.2)	49.67	24.01	2.87	47.21	23.09	3.26	44.62	22.17	3.67	41.82	21.21	4.11	37.93	19.91	4.57	33.56	18.45	5.01
	67 (19.4)	45.16	29.53	2.91	42.72	28.60	3.29	40.14	27.59	3.69	36.47	26.18	4.05	32.51	24.69	4.44	28.56	23.20	4.90
	63 (17.2)††	41.66	28.34	2.93	39.36	27.37	3.29	36.20	26.05	3.63	32.52	24.55	3.98	29.00	23.12	4.39	25.27	21.60	4.83
	62 (16.7)	40.81	34.80	2.94	38.58	33.78	3.29	35.35	32.24	3.61	32.28	32.28	3.98	29.64	29.64	4.40	26.87	26.87	4.86
	57 (13.9)	39.24	39.24	2.94	37.50	37.50	3.29	34.81	34.81	3.60	32.22	32.22	3.98	29.59	29.59	4.40	26.82	26.82	4.86
1400	72 (22.2)	50.52	24.97	2.89	48.02	24.13	3.29	45.34	23.23	3.71	42.51	22.27	4.15	38.72	21.14	4.62	34.24	19.64	5.08
	67 (19.4)	46.10	31.37	2.94	43.60	30.47	3.33	41.00	29.52	3.73	37.65	28.23	4.13	33.26	26.58	4.51	29.23	25.04	4.96
	63 (17.2)††	42.58	30.13	2.98	40.15	29.13	3.34	37.57	28.06	3.71	33.28	26.32	4.04	29.64	24.83	4.44	25.85	23.22	4.89
	62 (16.7)	41.81	37.29	2.98	39.52	36.17	3.34	37.14	37.14	3.71	33.88	33.88	4.05	31.05	31.05	4.47	28.13	28.13	4.94
	57 (13.9)	40.96	40.96	2.98	39.10	39.10	3.34	37.06	37.06	3.71	33.82	33.82	4.05	31.00	31.00	4.47	28.08	28.08	4.94
1575	72 (22.2)	51.15	25.91	2.93	48.59	25.09	3.34	45.86	24.18	3.76	42.97	23.24	4.20	39.28	22.23	4.67	34.78	20.77	5.15
	67 (19.4)	46.81	33.08	2.98	44.24	32.22	3.37	41.60	31.27	3.77	38.48	30.11	4.20	33.88	28.36	4.57	29.75	26.68	5.02
	63 (17.2)††	43.28	31.82	3.01	40.78	30.80	3.38	38.15	29.72	3.77	33.93	28.00	4.10	30.14	26.41	4.50	26.39	26.23	4.95
	62 (16.7)	42.72	39.48	3.02	40.50	40.50	3.38	38.41	38.41	3.77	35.30	35.30	4.12	32.26	32.26	4.54	29.17	29.17	5.01
	57 (13.9)	42.43	42.43	3.02	40.45	40.45	3.38	38.36	38.36	3.77	35.24	35.24	4.12	32.21	32.21	4.54	29.12	29.12	5.01

See notes on pg. 22

DETAILED COOLING CAPACITIES* (CONT.)

EVAPORATOR AIR		CONDENSER ENTERING AIR TEMPERATURES °F (°C)																	
		75 (23.9)			85 (29.4)			95 (35)			105 (40.6)			115 (46.1)			125 (51.7)		
CFM	EWB °F (°C)	Capacity MBtuh		Total Sys. KW**	Capacity MBtuh		Total Sys. KW**	Capacity MBtuh		Total Sys. KW**	Capacity MBtuh		Total Sys. KW**	Capacity MBtuh		Total Sys. KW**	Capacity MBtuh		Total Sys. KW**
		Total	Sens‡		Total	Sens‡		Total	Sens‡		Total	Sens‡		Total	Sens‡		Total	Sens‡	
CH13NA048–C Outdoor Section With FB4CNF048 Indoor Section																			
1400	57 (13.9)	44.84	44.84	3.32	42.92	42.92	3.70	40.93	40.93	4.11	38.86	38.86	4.55	36.60	36.60	5.05	33.56	33.56	5.57
	62 (16.7)	46.76	41.67	3.34	44.30	40.49	3.72	41.77	39.25	4.12	39.24	37.92	4.56	36.66	36.66	5.06	33.63	33.63	5.57
	63 (17.2)††	47.74	33.97	3.34	45.20	32.83	3.73	42.56	31.66	4.13	39.87	30.49	4.57	36.99	29.25	5.06	32.84	27.47	5.54
	67 (19.4)	51.68	35.32	3.36	48.96	34.23	3.77	46.17	33.09	4.19	43.26	31.91	4.64	40.24	30.71	5.14	37.01	29.42	5.71
	72 (22.2)	56.56	28.54	3.38	54.12	27.70	3.82	51.31	26.67	4.26	48.25	25.56	4.72	45.02	24.40	5.24	41.51	23.12	5.82
1600	57 (13.9)	46.75	46.75	3.40	44.70	44.70	3.78	42.55	42.55	4.20	40.36	40.36	4.65	38.00	38.00	5.16	35.38	35.38	5.73
	62 (16.7)	47.86	44.58	3.40	45.34	43.30	3.79	42.77	42.42	4.20	40.41	40.41	4.65	38.05	38.05	5.16	35.43	35.43	5.73
	63 (17.2)††	48.79	36.07	3.41	46.10	34.88	3.80	43.34	33.68	4.21	40.55	32.48	4.65	37.59	31.21	5.14	33.69	29.53	5.64
	67 (19.4)	52.69	37.40	3.43	50.00	36.46	3.84	47.00	35.27	4.27	43.99	34.06	4.73	40.86	32.83	5.22	37.56	31.51	5.79
	72 (22.2)	57.44	29.66	3.45	55.02	28.92	3.89	52.17	27.93	4.33	49.07	26.85	4.80	45.76	25.71	5.31	42.25	24.50	5.89
1800	57 (13.9)	48.37	48.37	3.47	46.18	46.18	3.87	43.93	43.93	4.29	41.59	41.59	4.74	39.13	39.13	5.25	36.47	36.47	5.83
	62 (16.7)	48.85	47.20	3.47	46.29	46.29	3.87	43.99	43.99	4.29	41.64	41.64	4.74	39.18	39.18	5.25	36.52	36.52	5.83
	63 (17.2)††	49.60	38.01	3.47	46.81	36.86	3.87	43.97	35.64	4.28	41.05	34.39	4.73	38.05	33.09	5.22	34.69	31.59	5.77
	67 (19.4)	53.47	39.41	3.49	50.73	38.51	3.91	47.66	37.39	4.34	44.54	36.15	4.80	41.34	34.87	5.30	37.99	33.50	5.87
	72 (22.2)	58.09	30.71	3.52	55.69	30.04	3.95	52.82	29.12	4.40	49.68	28.08	4.87	46.32	26.95	5.38	42.74	25.74	5.96

EVAPORATOR AIR		CONDENSER ENTERING AIR TEMPERATURES °F (°C)																	
		75 (23.9)			85 (29.4)			95 (35)			105 (40.6)			115 (46.1)			125 (51.7)		
CFM	EWB °F (°C)	Capacity MBtuh		Total Sys KW**	Capacity MBtuh		Total Sys KW**	Capacity MBtuh		Total Sys KW**	Capacity MBtuh		Total Sys KW**	Capacity MBtuh		Total Sys KW**	Capacity MBtuh		Total Sys KW**
		Total	Sens‡		Total	Sens‡		Total	Sens‡		Total	Sens‡		Total	Sens‡		Total	Sens‡	
CH13NA049–B Outdoor Section With FB4CNF048 Indoor Section																			
1400	72 (22.2)	55.18	26.58	3.09	52.45	25.62	3.51	49.58	24.62	3.93	46.44	23.54	4.36	41.58	21.90	4.80	36.80	20.30	5.27
	67 (19.4)	50.27	32.84	3.08	47.56	31.82	3.48	44.65	30.69	3.89	40.02	28.92	4.25	35.80	27.32	4.68	31.49	25.70	5.16
	63 (17.2)††	46.43	31.58	3.08	43.86	30.48	3.46	39.76	28.77	3.79	35.90	27.19	4.18	31.94	25.58	4.61	27.74	23.85	5.09
	62 (16.7)	45.50	38.79	3.08	43.00	37.63	3.45	38.96	35.69	3.78	35.68	35.68	4.18	32.70	32.70	4.63	29.57	29.57	5.13
	57 (13.9)	43.72	43.72	3.07	41.74	41.74	3.44	38.42	38.42	3.78	35.61	35.61	4.18	32.65	32.65	4.63	29.52	29.52	5.12
1600	72 (22.2)	56.09	27.67	3.15	53.31	26.76	3.57	50.34	25.76	3.99	47.19	24.72	4.43	42.56	23.24	4.89	37.52	21.59	5.35
	67 (19.4)	51.26	34.82	3.14	48.46	33.83	3.55	45.50	32.76	3.96	40.99	31.04	4.33	36.54	29.36	4.76	32.10	27.63	5.24
	63 (17.2)††	47.41	33.51	3.14	44.72	32.39	3.52	40.81	30.79	3.87	36.65	29.09	4.25	32.61	27.43	4.68	28.34	25.58	5.16
	62 (16.7)	46.56	41.49	3.14	44.01	40.23	3.52	40.40	40.40	3.87	37.31	37.31	4.27	34.19	34.19	4.71	30.92	30.92	5.21
	57 (13.9)	45.57	45.57	3.14	43.49	43.49	3.52	40.35	40.35	3.87	37.25	37.25	4.27	34.14	34.14	4.71	30.87	30.87	5.21
1800	72 (22.2)	56.77	28.71	3.21	53.95	27.83	3.63	50.93	26.83	4.06	47.73	25.80	4.49	43.24	24.50	4.96	38.09	22.84	5.43
	67 (19.4)	52.03	36.73	3.20	49.15	35.76	3.61	46.16	34.73	4.02	41.79	33.07	4.41	37.13	31.28	4.83	32.66	29.42	5.31
	63 (17.2)††	48.21	35.37	3.20	45.40	34.24	3.59	42.36	33.00	3.98	37.31	30.93	4.32	33.58	29.50	4.77	28.89	28.89	5.23
	62 (16.7)	47.55	43.88	3.20	44.99	44.99	3.59	42.61	42.61	3.98	38.73	38.73	4.35	35.45	35.45	4.80	32.03	32.03	5.30
	57 (13.9)	47.11	47.11	3.20	44.92	44.92	3.59	42.55	42.55	3.98	38.67	38.67	4.35	35.40	35.40	4.80	31.99	31.99	5.30

See notes on pg. 22

DETAILED COOLING CAPACITIES* (CONT.)

EVAPORATOR AIR		CONDENSER ENTERING AIR TEMPERATURES °F (°C)																	
		75 (23.9)			85 (29.4)			95 (35)			105 (40.6)			115 (46.1)			125 (51.7)		
CFM	EWB °F (°C)	Capacity MBtuh		Total Sys. KW**	Capacity MBtuh		Total Sys. KW**	Capacity MBtuh		Total Sys. KW**	Capacity MBtuh		Total Sys. KW**	Capacity MBtuh		Total Sys. KW**	Capacity MBtuh		Total Sys. KW**
		Total	Sens‡		Total	Sens‡		Total	Sens‡		Total	Sens‡		Total	Sens‡		Total	Sens‡	
CH13NA060–C Outdoor Section With FX4DN(B,F)061 Indoor Section																			
1750	57 (13.9)	54.58	54.58	4.12	52.58	52.58	4.55	50.45	50.45	5.03	48.15	48.15	5.59	45.65	45.65	6.22	42.94	42.94	6.94
	62 (16.7)	56.76	49.61	4.15	54.22	48.41	4.57	51.54	47.15	5.05	48.72	45.76	5.60	45.74	45.74	6.22	43.00	43.00	6.95
	63 (17.2)††	57.87	40.38	4.16	55.26	39.22	4.59	52.48	38.00	5.06	49.52	36.74	5.61	46.35	35.39	6.23	42.96	33.96	6.94
	67 (19.4)	62.33	41.92	4.22	59.54	40.77	4.65	56.55	39.56	5.13	53.37	38.29	5.68	49.98	36.96	6.30	46.35	35.53	7.01
	72 (22.2)	68.43	34.03	4.31	65.38	32.89	4.75	62.12	31.69	5.23	58.67	30.43	5.78	54.98	29.12	6.40	51.05	27.72	7.10
2000	57 (13.9)	56.85	56.85	4.22	54.71	54.71	4.66	52.42	52.42	5.14	49.95	49.95	5.70	47.29	47.29	6.33	44.40	44.40	7.05
	62 (16.7)	58.04	53.16	4.24	55.42	51.86	4.67	52.69	50.40	5.15	50.02	50.02	5.70	47.35	47.35	6.33	44.46	44.46	7.05
	63 (17.2)††	59.05	42.86	4.25	56.31	41.66	4.68	53.41	40.43	5.16	50.32	39.13	5.70	47.03	37.74	6.32	43.53	36.27	7.03
	67 (19.4)	63.54	44.58	4.32	60.60	43.39	4.75	57.50	42.16	5.23	54.19	40.86	5.77	50.67	39.50	6.39	46.93	38.04	7.10
	72 (22.2)	69.69	35.64	4.41	66.51	34.48	4.84	63.12	33.26	5.33	59.52	31.98	5.87	55.70	30.65	6.49	51.64	29.23	7.19
2250	57 (13.9)	58.74	58.74	4.33	56.47	56.47	4.76	54.04	54.04	5.25	51.43	51.43	5.80	48.62	48.62	6.43	45.58	45.58	7.15
	62 (16.7)	59.14	56.29	4.33	56.56	56.56	4.76	54.11	54.11	5.25	51.50	51.50	5.80	48.68	48.68	6.43	45.63	45.63	7.15
	63 (17.2)††	59.92	45.20	4.34	57.09	43.99	4.77	54.08	42.73	5.24	50.91	41.39	5.79	47.54	39.96	6.41	43.96	38.42	7.12
	67 (19.4)	64.42	47.10	4.41	61.39	45.91	4.84	58.19	44.64	5.32	54.77	43.32	5.86	51.18	41.91	6.48	47.35	40.39	7.18
	72 (22.2)	70.64	37.16	4.50	67.35	35.98	4.93	63.84	34.74	5.42	60.14	33.44	5.96	56.21	32.09	6.58	52.04	30.66	7.28

EVAPORATOR AIR		CONDENSER ENTERING AIR TEMPERATURES °F (°C)																	
		75 (23.9)			85 (29.4)			95 (35)			105 (40.6)			115 (46.1)			125 (51.7)		
CFM	EWB °F (°C)	Capacity MBtuh		Total Sys KW**	Capacity MBtuh		Total Sys KW**	Capacity MBtuh		Total Sys KW**	Capacity MBtuh		Total Sys KW**	Capacity MBtuh		Total Sys KW**	Capacity MBtuh		Total Sys KW**
		Total	Sens‡		Total	Sens‡		Total	Sens‡		Total	Sens‡		Total	Sens‡		Total	Sens‡	
CH13NA061–B Outdoor Section With FB4CNF060 Indoor Section																			
1750	72 (22.2)	69.05	35.41	4.35	65.87	34.16	4.78	62.51	32.87	5.26	58.93	31.51	5.80	55.06	30.06	6.42	50.92	28.53	7.11
	67 (19.4)	62.96	43.59	4.28	60.07	42.34	4.70	57.00	41.04	5.18	53.73	39.67	5.72	50.21	38.21	6.34	46.43	36.67	7.05
	63 (17.2)††	58.46	42.00	4.23	55.78	40.76	4.65	52.92	39.45	5.12	49.90	38.08	5.67	46.64	36.64	6.29	43.13	35.09	7.00
	62 (16.7)	57.35	51.53	4.21	54.77	50.25	4.64	51.98	48.86	5.11	49.12	47.39	5.66	46.05	45.68	6.28	43.01	43.01	7.00
	57 (13.9)	54.91	54.91	4.19	52.89	52.89	4.61	50.70	50.70	5.10	48.34	48.34	5.64	45.77	45.77	6.28	42.95	42.95	7.00
2000	72 (22.2)	70.27	36.97	4.46	66.96	35.71	4.89	63.44	34.39	5.36	59.72	33.00	5.90	55.72	31.53	6.52	51.43	29.97	7.21
	67 (19.4)	64.13	46.20	4.38	61.10	44.93	4.81	57.91	43.60	5.28	54.48	42.20	5.82	50.84	40.71	6.44	46.93	39.10	7.14
	63 (17.2)††	59.59	44.43	4.33	56.79	43.17	4.75	53.82	41.84	5.22	50.66	40.44	5.77	47.27	38.94	6.39	43.63	37.33	7.10
	62 (16.7)	58.59	55.04	4.32	55.90	53.65	4.74	53.09	52.10	5.22	50.15	50.15	5.76	47.36	47.36	6.39	44.35	44.35	7.11
	57 (13.9)	57.10	57.10	4.30	54.92	54.92	4.73	52.58	52.58	5.21	50.05	50.05	5.76	47.30	47.30	6.39	44.30	44.30	7.11
2250	72 (22.2)	71.22	38.47	4.56	67.77	37.18	4.99	64.14	35.84	5.46	60.30	34.44	6.00	56.16	32.93	6.62	51.79	31.36	7.31
	67 (19.4)	65.02	48.72	4.48	61.89	47.43	4.91	58.56	46.06	5.38	55.05	44.63	5.92	51.28	43.07	6.54	47.29	41.41	7.24
	63 (17.2)††	60.47	46.78	4.43	57.55	45.48	4.85	54.48	44.12	5.32	51.22	42.68	5.86	47.72	41.12	6.49	44.01	39.45	7.19
	62 (16.7)	59.62	58.18	4.42	56.92	56.55	4.84	54.18	54.18	5.32	51.51	51.51	5.87	48.59	48.59	6.50	45.42	45.42	7.21
	57 (13.9)	58.91	58.91	4.41	56.60	56.60	4.84	54.11	54.11	5.32	51.45	51.45	5.87	48.54	48.54	6.50	45.37	45.37	7.21

* Detailed cooling capacities are based on indoor and outdoor unit at the same elevation, per AHRI Standard 210/240–2008, and connected by 25 ft of tubing. If other than 25 ft of tubing is used and/or indoor unit is located above outdoor unit, a slight variation in capacity may occur.

† Total and sensible capacities are net capacities. Blower motor heat has been subtracted.

‡ Sensible capacities shown are based on 80°F (27°C) entering air at the indoor coil. For sensible capacities at other than 80°F (27°C), deduct 835 Btuh (245 kW) per 1000 CFM (480 L/S) of indoor coil air for each degree below 80°F (27°C), or add 835 Btuh (245 kW) per 1000 CFM (480 L/S) of indoor coil air per degree above 80°F (27°C).
When the required data falls between the published data, interpolation may be performed.

** Unit kW is total of indoor and outdoor unit kilowatts.

HEAT PUMP HEATING PERFORMANCE

INDOOR AIR		OUTDOOR COIL ENTERING AIR TEMPERATURES °F (°C)																							
		–3 (–19.4)			7 (–13.9)			17 (–8.3)			27 (–2.8)			37 (2.8)			47 (8.3)			57 (13.9)			67 (19.4)		
EDB °F (°C)	CFM	Capacity MBtuh		Total Sys. KW†	Capacity MBtuh		Total Sys. KW†	Capacity MBtuh		Total Sys. KW†	Capacity MBtuh		Total Sys. KW†	Capacity MBtuh		Total Sys. KW†	Capacity MBtuh		Total Sys. KW†	Capacity MBtuh		Total Sys. KW†	Capacity MBtuh		Total Sys. KW†
		Total	Integ*		Total	Integ*		Total	Integ*		Total	Integ*		Total	Integ*		Total	Integ*		Total	Integ*		Total	Integ*	
CH13NA018–A Outdoor Section With FB4CNF018 Indoor Section																									
65 (18.3)	525	5.18	4.76	1.09	7.28	6.69	1.13	9.55	8.71	1.18	12.03	10.68	1.23	14.44	13.14	1.28	16.94	16.94	1.33	19.01	19.01	1.38	20.73	20.73	1.42
	600	5.26	4.84	1.09	7.38	6.78	1.13	9.73	8.87	1.17	12.17	10.81	1.21	14.62	13.31	1.26	16.98	16.98	1.30	18.87	18.87	1.34	20.34	20.34	1.36
	675	5.33	4.91	1.10	7.47	6.87	1.13	10.00	9.11	1.17	12.28	10.91	1.20	14.77	13.44	1.25	16.95	16.95	1.27	18.64	18.64	1.30	19.82	19.82	1.32
70 (21.1)	525	4.93	4.53	1.14	7.02	6.45	1.19	9.26	8.44	1.24	11.80	10.48	1.29	14.18	12.91	1.35	16.72	16.72	1.40	18.81	18.81	1.45	20.55	20.55	1.50
	600	5.01	4.61	1.14	7.13	6.55	1.19	9.40	8.57	1.23	11.95	10.61	1.28	14.36	13.07	1.32	16.80	16.80	1.37	18.74	18.74	1.41	20.27	20.27	1.44
	675	5.08	4.67	1.15	7.22	6.63	1.19	9.52	8.68	1.23	12.06	10.71	1.27	14.51	13.21	1.31	16.81	16.81	1.34	18.58	18.58	1.37	19.88	19.88	1.40
75 (23.9)	525	4.64	4.27	1.19	6.74	6.20	1.24	8.97	8.18	1.29	11.57	10.27	1.36	13.92	12.67	1.41	16.49	16.49	1.48	18.58	18.58	1.53	20.34	20.34	1.57
	600	4.73	4.35	1.19	6.85	6.30	1.24	9.11	8.30	1.29	11.72	10.40	1.34	14.10	12.83	1.39	16.59	16.59	1.44	18.57	18.57	1.48	20.12	20.12	1.51
	675	4.80	4.42	1.20	6.94	6.38	1.24	9.22	8.41	1.28	11.83	10.51	1.33	14.25	12.96	1.37	16.64	16.64	1.41	18.48	18.48	1.45	19.85	19.85	1.47

INDOOR AIR		OUTDOOR COIL ENTERING AIR TEMPERATURES °F (°C)																							
		–3 (–19.4)			7 (–13.9)			17 (–8.3)			27 (–2.8)			37 (2.8)			47 (8.3)			57 (13.9)			67 (19.4)		
EDB	CFM	Capacity MBtuh		Total Sys. KW†	Capacity MBtuh		Total Sys. KW†	Capacity MBtuh		Total Sys. KW†	Capacity MBtuh		Total Sys. KW†	Capacity MBtuh		Total Sys. KW†	Capacity MBtuh		Total Sys. KW†	Capacity MBtuh		Total Sys. KW†	Capacity MBtuh		Total Sys. KW†
		Total	Integ*		Total	Integ*		Total	Integ*		Total	Integ*		Total	Integ*		Total	Integ*		Total	Integ*		Total	Integ*	
CH13NA019–A Outdoor Section With FY5BNF018 Indoor Section																									
65 (18.3)	525	5.35	4.92	1.09	7.47	6.87	1.14	9.77	8.91	1.19	12.44	11.04	1.25	14.90	13.56	1.31	17.64	17.64	1.39	20.69	20.69	1.48	23.59	23.59	1.56
	600	5.48	5.04	1.10	7.62	7.00	1.15	9.95	9.07	1.19	12.62	11.21	1.25	15.13	13.77	1.30	17.93	17.93	1.37	20.94	20.94	1.44	23.59	23.59	1.51
	675	5.59	5.14	1.11	7.74	7.12	1.16	10.11	9.21	1.20	12.78	11.35	1.25	15.32	13.94	1.29	18.15	18.15	1.36	21.01	21.01	1.42	23.45	23.45	1.48
70 (21.1)	525	5.08	4.67	1.13	7.19	6.60	1.19	9.47	8.63	1.24	12.18	10.82	1.31	14.63	13.31	1.37	17.32	17.32	1.45	20.31	20.31	1.55	23.30	23.30	1.64
	600	5.20	4.78	1.14	7.34	6.74	1.19	9.65	8.80	1.24	12.38	10.99	1.30	14.85	13.51	1.36	17.60	17.60	1.43	20.63	20.63	1.51	23.36	23.36	1.59
	675	5.31	4.89	1.16	7.47	6.86	1.21	9.81	8.94	1.25	12.54	11.14	1.30	15.04	13.69	1.35	17.83	17.83	1.42	20.78	20.78	1.49	23.29	23.29	1.55
75 (23.9)	525	4.76	4.38	1.18	6.87	6.32	1.24	9.14	8.34	1.30	11.90	10.57	1.37	14.34	13.05	1.44	16.99	16.99	1.52	19.93	19.93	1.62	22.96	22.96	1.72
	600	4.88	4.49	1.19	7.02	6.45	1.25	9.33	8.50	1.30	12.10	10.75	1.36	14.58	13.26	1.42	17.27	17.27	1.50	20.28	20.28	1.59	23.11	23.11	1.66
	675	4.99	4.59	1.21	7.16	6.58	1.26	9.48	8.65	1.31	12.27	10.90	1.36	14.76	13.44	1.42	17.51	17.51	1.49	20.50	20.50	1.56	23.10	23.10	1.63

See notes on pg. 29

HEAT PUMP HEATING PERFORMANCE

INDOOR AIR		OUTDOOR COIL ENTERING AIR TEMPERATURES °F (°C)																							
		–3 (–19.4)			7 (–13.9)			17 (–8.3)			27 (–2.8)			37 (2.8)			47 (8.3)			57 (13.9)			67 (19.4)		
EDB °F (°C)	CFM	Capacity MBtuh		Total Sys. KW†	Capacity MBtuh		Total Sys. KW†	Capacity MBtuh		Total Sys. KW†	Capacity MBtuh		Total Sys. KW†	Capacity MBtuh		Total Sys. KW†	Capacity MBtuh		Total Sys. KW†	Capacity MBtuh		Total Sys. KW†	Capacity MBtuh		Total Sys. KW†
		Total	Integ‡		Total	Integ‡		Total	Integ‡		Total	Integ‡		Total	Integ‡		Total	Integ‡		Total	Integ‡		Total	Integ‡	
CH13NA024–A Outdoor Section With FB4CNF024 Indoor Section																									
65 (18.3)	700	7.98	7.35	1.45	10.55	9.70	1.54	13.20	12.03	1.60	16.25	14.43	1.67	19.15	17.43	1.73	22.05	22.05	1.80	25.36	25.36	1.89	28.21	28.21	1.97
	800	8.15	7.50	1.46	10.74	9.87	1.54	13.42	12.23	1.60	16.65	14.78	1.65	19.39	17.64	1.70	22.34	22.34	1.76	25.60	25.60	1.83	28.25	28.25	1.91
	900	8.29	7.63	1.47	10.91	10.02	1.55	13.60	12.40	1.60	16.82	14.94	1.65	19.58	17.82	1.69	22.59	22.59	1.74	25.74	25.74	1.80	28.20	28.20	1.86
70 (21.1)	700	7.54	6.94	1.51	10.14	9.31	1.61	12.78	11.66	1.67	15.64	13.89	1.74	18.85	17.15	1.82	21.72	21.72	1.89	24.99	24.99	1.98	27.87	27.87	2.07
	800	7.71	7.09	1.52	10.32	9.49	1.61	13.00	11.85	1.67	15.96	14.18	1.73	19.08	17.36	1.79	22.00	22.00	1.85	25.27	25.27	1.93	27.95	27.95	2.00
	900	7.85	7.22	1.53	10.49	9.64	1.62	13.19	12.03	1.67	16.26	14.44	1.72	19.29	17.55	1.78	22.24	22.24	1.83	25.44	25.44	1.89	27.94	27.94	1.96
75 (23.9)	700	7.08	6.51	1.58	9.68	8.89	1.68	12.36	11.27	1.75	15.19	13.49	1.82	18.59	16.91	1.91	21.39	21.39	1.98	24.61	24.61	2.08	27.51	27.51	2.17
	800	7.24	6.66	1.59	9.86	9.06	1.68	12.57	11.46	1.75	15.45	13.73	1.81	18.81	17.11	1.88	21.66	21.66	1.95	24.91	24.91	2.02	27.62	27.62	2.10
	900	7.38	6.79	1.60	10.03	9.22	1.69	12.76	11.63	1.75	15.68	13.92	1.80	18.99	17.28	1.87	21.90	21.90	1.92	25.11	25.11	1.99	27.65	27.65	2.06

INDOOR AIR		OUTDOOR COIL ENTERING AIR TEMPERATURES °F (°C)																							
		–3 (–19.4)			7 (–13.9)			17 (–8.3)			27 (–2.8)			37 (2.8)			47 (8.3)			57 (13.9)			67 (19.4)		
EDB	CFM	Capacity MBtuh		Total Sys. KW†	Capacity MBtuh		Total Sys. KW†	Capacity MBtuh		Total Sys. KW†	Capacity MBtuh		Total Sys. KW†	Capacity MBtuh		Total Sys. KW†	Capacity MBtuh		Total Sys. KW†	Capacity MBtuh		Total Sys. KW†	Capacity MBtuh		Total Sys. KW†
		Total	Integ*		Total	Integ*		Total	Integ*		Total	Integ*		Total	Integ*		Total	Integ*		Total	Integ*		Total	Integ*	
CH13NA025–B Outdoor Section With FY4ANF030 Indoor Section																									
65 (18.3)	732	9.41	8.65	1.44	12.45	11.44	1.51	15.23	13.89	1.57	18.33	16.28	1.64	21.85	19.88	1.72	25.43	25.43	1.80	28.28	28.28	1.87	30.75	30.75	1.94
	835	9.59	8.82	1.47	12.64	11.62	1.53	15.45	14.09	1.58	18.60	16.52	1.64	22.17	20.17	1.72	25.26	25.26	1.77	27.79	27.79	1.83	29.76	29.76	1.88
	938	9.76	8.98	1.49	12.82	11.78	1.55	15.65	14.27	1.59	18.82	16.72	1.65	22.40	20.38	1.72	25.01	25.01	1.77	27.17	27.17	1.81	28.63	28.63	1.85
70 (21.1)	732	9.12	8.39	1.50	11.97	11.00	1.57	14.98	13.66	1.64	18.03	16.01	1.71	21.49	19.55	1.79	25.23	25.23	1.88	28.15	28.15	1.96	30.64	30.64	2.03
	835	9.31	8.56	1.52	12.40	11.40	1.59	15.20	13.86	1.64	18.30	16.25	1.71	21.80	19.84	1.79	25.18	25.18	1.86	27.77	27.77	1.92	29.92	29.92	1.98
	938	9.48	8.72	1.55	12.58	11.56	1.61	15.39	14.04	1.66	18.53	16.45	1.72	22.07	20.08	1.80	25.00	25.00	1.85	27.30	27.30	1.90	28.96	28.96	1.94
75 (23.9)	732	8.79	8.09	1.56	11.57	10.63	1.63	14.73	13.43	1.71	17.72	15.74	1.78	21.12	19.22	1.87	24.93	24.93	1.97	27.94	27.94	2.05	30.48	30.48	2.13
	835	8.99	8.27	1.58	11.79	10.84	1.65	14.95	13.63	1.72	17.98	15.97	1.78	21.43	19.50	1.86	25.04	25.04	1.95	27.70	27.70	2.01	29.88	29.88	2.07
	938	9.16	8.43	1.61	11.99	11.02	1.67	15.14	13.80	1.73	18.21	16.17	1.79	21.70	19.75	1.87	24.91	24.91	1.93	27.34	27.34	1.99	29.17	29.17	2.04

See notes on pg. 29

HEAT PUMP HEATING PERFORMANCE

INDOOR AIR		OUTDOOR COIL ENTERING AIR TEMPERATURES °F (°C)																							
		−3 (−19.4)			7 (−13.9)			17 (−8.3)			27 (−2.8)			37 (2.8)			47 (8.3)			57 (13.9)			67 (19.4)		
EDB °F (°C)	CFM	Capacity MBtuh		Total Syst. KW†	Capacity MBtuh		Total Syst. KW†	Capacity MBtuh		Total Syst. KW†	Capacity MBtuh		Total Syst. KW†	Capacity MBtuh		Total Syst. KW†	Capacity MBtuh		Total Syst. KW†	Capacity MBtuh		Total Syst. KW†	Capacity MBtuh		Total Syst. KW†
		Total	Integ*		Total	Integ*		Total	Integ*		Total	Integ*		Total	Integ*		Total	Integ*		Total	Integ*		Total	Integ*	
CH13NA030−A Outdoor Section With FB4CNF030 Indoor Section																									
65 (18.3)	875	11.54	10.62	2.01	14.61	13.43	2.07	17.89	16.31	2.13	21.51	19.10	2.20	24.95	22.71	2.26	28.66	28.66	2.33	32.91	32.91	2.40	36.28	36.28	2.45
	1000	11.73	10.79	2.02	14.83	13.63	2.07	18.18	16.58	2.12	21.76	19.32	2.18	25.26	22.99	2.23	29.04	29.04	2.29	33.14	33.14	2.34	36.10	36.10	2.37
	1125	11.90	10.95	2.04	15.02	13.81	2.08	18.71	17.06	2.13	21.96	19.50	2.17	25.52	23.22	2.21	29.36	29.36	2.27	33.18	33.18	2.30	35.81	35.81	2.32
70 (21.1)	875	11.08	10.20	2.10	14.17	13.02	2.16	17.44	15.90	2.22	21.21	18.84	2.30	24.58	22.37	2.36	28.23	28.23	2.44	32.45	32.45	2.51	35.92	35.92	2.57
	1000	11.30	10.40	2.11	14.41	13.24	2.17	17.70	16.14	2.22	21.45	19.05	2.28	24.88	22.64	2.33	28.60	28.60	2.39	32.74	32.74	2.45	35.79	35.79	2.49
	1125	11.48	10.56	2.13	14.61	13.42	2.18	17.93	16.35	2.22	21.65	19.23	2.27	25.13	22.87	2.32	28.91	28.91	2.37	32.84	32.84	2.41	35.55	35.55	2.43
75 (23.9)	875	10.66	9.81	2.20	13.74	12.63	2.26	16.99	15.49	2.32	20.87	18.54	2.41	24.20	22.03	2.48	27.80	27.80	2.55	31.99	31.99	2.63	35.52	35.52	2.69
	1000	10.85	9.98	2.21	13.97	12.83	2.26	17.25	15.73	2.32	21.12	18.76	2.39	24.49	22.29	2.44	28.16	28.16	2.50	32.32	32.32	2.56	35.45	35.45	2.60
	1125	11.02	10.14	2.22	14.16	13.01	2.27	17.47	15.93	2.32	21.33	18.95	2.38	24.75	22.52	2.43	28.47	28.47	2.48	32.48	32.48	2.52	35.27	35.27	2.55

INDOOR AIR		OUTDOOR COIL ENTERING AIR TEMPERATURES °F (°C)																							
		−3 (−19.4)			7 (−13.9)			17 (−8.3)			27 (−2.8)			37 (2.8)			47 (8.3)			57 (13.9)			67 (19.4)		
EDB	CFM	Capacity MBtuh		Total Sys. KW†	Capacity MBtuh		Total Sys. KW†	Capacity MBtuh		Total Sys. KW†	Capacity MBtuh		Total Sys. KW†	Capacity MBtuh		Total Sys. KW†	Capacity MBtuh		Total Sys. KW†	Capacity MBtuh		Total Sys. KW†	Capacity MBtuh		Total Sys. KW†
		Total	Integ*		Total	Integ*		Total	Integ*		Total	Integ*		Total	Integ*		Total	Integ*		Total	Integ*		Total	Integ*	
CH13NA031−A Outdoor Section With PF4MNA030 Indoor Section																									
65 (18.3)	875	10.82	9.96	1.98	14.17	13.02	2.08	17.80	16.23	2.17	22.29	19.80	2.29	26.19	23.83	2.40	30.45	30.45	2.51	35.44	35.44	2.65	41.17	41.17	2.81
	1000	11.07	10.19	2.01	14.46	13.29	2.10	18.14	16.54	2.18	22.63	20.10	2.29	26.57	24.18	2.38	30.92	30.92	2.48	36.05	36.05	2.61	41.75	41.75	2.74
	1125	11.30	10.40	2.04	14.72	13.52	2.12	18.43	16.80	2.20	22.92	20.36	2.30	26.91	24.48	2.38	31.32	31.32	2.47	36.57	36.57	2.59	42.11	42.11	2.70
70 (21.1)	875	10.31	9.49	2.06	13.66	12.56	2.16	17.28	15.76	2.26	21.33	18.94	2.37	25.79	23.46	2.50	30.00	30.00	2.62	34.86	34.86	2.76	40.52	40.52	2.94
	1000	10.55	9.70	2.09	13.93	12.80	2.18	17.59	16.04	2.27	21.77	19.34	2.37	26.15	23.80	2.49	30.44	30.44	2.59	35.46	35.46	2.72	41.16	41.16	2.86
	1125	10.79	9.93	2.12	14.21	13.06	2.21	17.91	16.33	2.29	22.52	20.00	2.39	26.48	24.10	2.48	30.83	30.83	2.58	35.96	35.96	2.70	41.57	41.57	2.81
75 (23.9)	875	9.78	9.00	2.15	13.13	12.07	2.25	16.75	15.27	2.36	20.70	18.39	2.47	25.41	23.12	2.62	29.57	29.57	2.73	34.29	34.29	2.88	39.83	39.83	3.07
	1000	10.03	9.22	2.18	13.42	12.33	2.27	17.08	15.58	2.37	21.11	18.74	2.47	25.76	23.45	2.60	29.98	29.98	2.70	34.87	34.87	2.83	40.53	40.53	2.99
	1125	10.25	9.43	2.21	13.68	12.57	2.30	17.38	15.84	2.39	21.48	19.07	2.48	26.07	23.72	2.59	30.39	30.39	2.69	35.36	35.36	2.81	40.99	40.99	2.94

See notes on pg. 29

HEAT PUMP HEATING PERFORMANCE

INDOOR AIR		OUTDOOR COIL ENTERING AIR TEMPERATURES °F (°C)																							
		−3 (−19.4)			7 (−13.9)			17 (−8.3)			27 (−2.8)			37 (2.8)			47 (8.3)			57 (13.9)			67 (19.4)		
EDB °F (°C)	CFM	Capacity MBtuh		Total Sys. KW†	Capacity MBtuh		Total Sys. KW†	Capacity MBtuh		Total Sys. KW†	Capacity MBtuh		Total Sys. KW†	Capacity MBtuh		Total Sys. KW†	Capacity MBtuh		Total Sys. KW†	Capacity MBtuh		Total Sys. KW†	Capacity MBtuh		Total Sys. KW†
		Total	Integ‡		Total	Integ‡		Total	Integ‡		Total	Integ‡		Total	Integ‡		Total	Integ‡		Total	Integ‡		Total	Integ‡	
CH13NA036–C Outdoor Section With FB4CNF036 Indoor Section																									
65 (18.3)	1050	12.79	11.77	2.17	16.58	15.24	2.26	20.53	18.72	2.35	24.72	21.96	2.46	29.59	26.93	2.60	33.44	33.44	2.71	37.48	37.48	2.84	41.96	41.96	3.04
	1200	13.08	12.04	2.19	16.92	15.55	2.28	20.91	19.07	2.36	25.18	22.36	2.46	29.99	27.29	2.58	33.84	33.84	2.68	38.05	38.05	2.80	42.68	42.68	2.97
	1350	13.35	12.28	2.22	17.22	15.83	2.30	21.25	19.37	2.37	25.56	22.70	2.46	30.31	27.58	2.58	34.23	34.23	2.66	38.53	38.53	2.77	43.26	43.26	2.93
70 (21.1)	1050	11.97	11.01	2.27	15.80	14.52	2.36	19.79	18.04	2.46	24.01	21.32	2.57	29.06	26.45	2.72	32.95	32.95	2.83	36.89	36.89	2.97	41.27	41.27	3.17
	1200	12.30	11.31	2.29	16.16	14.85	2.38	20.20	18.42	2.47	24.46	21.72	2.56	29.49	26.84	2.70	33.40	33.40	2.80	37.45	37.45	2.92	41.97	41.97	3.10
	1350	12.56	11.55	2.32	16.46	15.13	2.40	20.53	18.72	2.48	24.83	22.06	2.57	29.84	27.16	2.69	33.76	33.76	2.78	37.92	37.92	2.89	42.56	42.56	3.06
75 (23.9)	1050	11.18	10.29	2.37	15.04	13.83	2.47	19.07	17.39	2.57	23.26	20.66	2.68	27.74	25.24	2.81	32.46	32.46	2.96	36.32	36.32	3.10	40.58	40.58	3.31
	1200	11.45	10.53	2.40	15.37	14.13	2.48	19.45	17.73	2.57	23.71	21.06	2.67	28.43	25.87	2.79	32.89	32.89	2.92	36.86	36.86	3.05	41.27	41.27	3.24
	1350	11.71	10.78	2.43	15.67	14.40	2.51	19.78	18.04	2.59	24.08	21.39	2.68	29.29	26.66	2.81	33.26	33.26	2.90	37.31	37.31	3.02	41.84	41.84	3.19

INDOOR AIR		OUTDOOR COIL ENTERING AIR TEMPERATURES °F (°C)																							
		−3 (−19.4)			7 (−13.9)			17 (−8.3)			27 (−2.8)			37 (2.8)			47 (8.3)			57 (13.9)			67 (19.4)		
EDB	CFM	Capacity MBtuh		Total Sys. KW†	Capacity MBtuh		Total Sys. KW†	Capacity MBtuh		Total Sys. KW†	Capacity MBtuh		Total Sys. KW†	Capacity MBtuh		Total Sys. KW†	Capacity MBtuh		Total Sys. KW†	Capacity MBtuh		Total Sys. KW†	Capacity MBtuh		Total Sys. KW†
		Total	Integ*		Total	Integ*		Total	Integ*		Total	Integ*		Total	Integ*		Total	Integ*		Total	Integ*		Total	Integ*	
CH13NA037–C Outdoor Section With PF4MNA042 Indoor Section																									
65 (18.3)	1050	14.77	13.59	2.40	17.68	16.24	2.43	21.20	19.33	2.48	25.70	22.82	2.56	29.98	27.28	2.65	34.78	34.78	2.75	40.09	40.09	2.86	45.03	45.03	2.97
	1200	15.21	13.99	2.44	18.14	16.67	2.47	21.71	19.79	2.51	26.15	23.22	2.58	30.49	27.74	2.65	35.32	35.32	2.75	40.47	40.47	2.83	45.09	45.09	2.93
	1350	15.61	14.36	2.49	18.56	17.06	2.52	22.17	20.21	2.55	26.56	23.59	2.61	30.95	28.16	2.67	35.84	35.84	2.75	40.61	40.61	2.83	44.98	44.98	2.92
70 (21.1)	1050	13.85	12.74	2.46	16.86	15.49	2.51	20.44	18.63	2.57	25.18	22.36	2.66	29.44	26.79	2.75	34.20	34.20	2.86	39.48	39.48	2.98	44.45	44.45	3.09
	1200	14.26	13.12	2.51	17.30	15.89	2.55	20.92	19.07	2.60	25.63	22.76	2.68	29.95	27.25	2.76	34.76	34.76	2.86	39.94	39.94	2.95	44.56	44.56	3.05
	1350	14.64	13.46	2.56	17.69	16.26	2.59	21.34	19.46	2.64	26.03	23.11	2.71	30.36	27.63	2.77	35.25	35.25	2.87	40.15	40.15	2.94	44.50	44.50	3.03
75 (23.9)	1050	12.95	11.91	2.53	16.05	14.75	2.59	19.71	17.97	2.66	24.06	21.37	2.74	28.95	26.35	2.86	33.65	33.65	2.98	38.89	38.89	3.11	43.87	43.87	3.22
	1200	13.34	12.27	2.57	16.47	15.14	2.63	20.16	18.38	2.69	25.07	22.27	2.78	29.42	26.77	2.87	34.19	34.19	2.97	39.37	39.37	3.07	44.01	44.01	3.17
	1350	13.69	12.60	2.62	16.85	15.48	2.67	20.56	18.75	2.72	25.47	22.62	2.81	29.81	27.13	2.88	34.66	34.66	2.98	39.67	39.67	3.06	44.00	44.00	3.15

See notes on pg. 29

HEAT PUMP HEATING PERFORMANCE

INDOOR AIR		OUTDOOR COIL ENTERING AIR TEMPERATURES ° F (° C)																							
		–3 (–19.4)			7 (–13.9)			17 (–8.3)			27 (–2.8)			37 (2.8)			47 (8.3)			57 (13.9)			67 (19.4)		
EDB ° F (° C)	CFM	Capacity MBtuh		Total Syst. KW†	Capacity MBtuh		Total Syst. KW†	Capacity MBtuh		Total Syst. KW†	Capacity MBtuh		Total Syst. KW†	Capacity MBtuh		Total Syst. KW†	Capacity MBtuh		Total Syst. KW†	Capacity MBtuh		Total Syst. KW†	Capacity MBtuh		Total Syst. KW†
		Total	Integ*		Total	Integ*		Total	Integ*		Total	Integ*		Total	Integ*		Total	Integ*		Total	Integ*		Total	Integ*	
CH13NA042–C Outdoor Section With FB4CNF042 Indoor Section																									
65 (18.3)	1225	15.60	14.35	2.64	20.17	18.54	2.75	24.73	22.55	2.85	29.47	26.17	2.95	34.77	31.64	3.05	39.07	39.07	3.08	43.89	43.89	3.10	49.14	49.14	3.09
	1400	15.96	14.69	2.66	20.52	18.86	2.76	25.15	22.93	2.85	29.96	26.61	2.94	35.16	32.00	3.03	39.57	39.57	3.05	44.52	44.52	3.05	49.61	49.61	3.01
	1525	16.17	14.87	2.68	20.75	19.07	2.77	25.41	23.17	2.86	30.27	26.89	2.94	35.42	32.23	3.02	39.87	39.87	3.04	44.90	44.90	3.03	49.76	49.76	2.97
70 (21.1)	1225	14.87	13.68	2.80	19.40	17.83	2.88	23.98	21.87	2.97	28.70	25.49	3.06	34.24	31.16	3.17	38.52	38.52	3.21	43.24	43.24	3.23	48.43	48.43	3.23
	1400	15.18	13.97	2.82	19.76	18.16	2.90	24.40	22.25	2.98	29.18	25.91	3.06	34.67	31.55	3.15	39.00	39.00	3.17	43.85	43.85	3.18	48.95	48.95	3.15
	1525	15.33	14.10	2.84	20.00	18.37	2.91	24.66	22.49	2.99	29.49	26.19	3.06	34.94	31.79	3.14	39.30	39.30	3.16	44.23	44.23	3.16	49.17	49.17	3.11
75 (23.9)	1225	14.04	12.91	2.96	18.60	17.10	3.03	23.21	21.16	3.11	27.91	24.79	3.19	32.98	30.01	3.28	38.00	38.00	3.34	42.60	42.60	3.37	47.73	47.73	3.38
	1400	14.34	13.20	2.99	18.96	17.42	3.04	23.61	21.53	3.11	28.39	25.21	3.18	34.12	31.05	3.28	38.46	38.46	3.30	43.19	43.19	3.31	48.30	48.30	3.29
	1525	14.55	13.38	3.01	19.19	17.63	3.05	23.88	21.77	3.12	28.69	25.48	3.18	34.39	31.29	3.27	38.75	38.75	3.29	43.56	43.56	3.29	48.57	48.57	3.25

INDOOR AIR		OUTDOOR COIL ENTERING AIR TEMPERATURES ° F (° C)																							
		–3 (–19.4)			7 (–13.9)			17 (–8.3)			27 (–2.8)			37 (2.8)			47 (8.3)			57 (13.9)			67 (19.4)		
EDB	CFM	Capacity MBtuh		Total Sys. KW†	Capacity MBtuh		Total Sys. KW†	Capacity MBtuh		Total Sys. KW†	Capacity MBtuh		Total Sys. KW†	Capacity MBtuh		Total Sys. KW†	Capacity MBtuh		Total Sys. KW†	Capacity MBtuh		Total Sys. KW†	Capacity MBtuh		Total Sys. KW†
		Total	Integ*		Total	Integ*		Total	Integ*		Total	Integ*		Total	Integ*		Total	Integ*		Total	Integ*		Total	Integ*	
CH13NA043–B Outdoor Section With FB4CNF042 Indoor Section																									
65 (18.3)	1225	13.87	12.76	2.19	18.33	16.85	2.36	23.04	21.01	2.53	28.16	25.01	2.70	34.17	31.10	2.90	39.59	39.59	3.05	45.98	45.98	3.19	53.46	53.46	3.30
	1400	14.16	13.03	2.21	18.68	17.16	2.36	23.44	21.37	2.53	28.68	25.47	2.70	34.59	31.48	2.88	40.13	40.13	3.02	46.68	46.68	3.14	54.11	54.11	3.21
	1575	14.42	13.27	2.23	18.97	17.43	2.38	23.78	21.68	2.54	29.80	26.46	2.72	34.98	31.83	2.87	40.60	40.60	3.00	47.27	47.27	3.11	54.46	54.46	3.15
70 (21.1)	1225	13.11	12.06	2.33	17.63	16.20	2.48	22.34	20.37	2.64	27.41	24.34	2.82	33.61	30.59	3.02	38.96	38.96	3.18	45.24	45.24	3.33	52.64	52.64	3.46
	1400	13.39	12.32	2.35	17.97	16.51	2.49	22.74	20.73	2.65	27.88	24.76	2.81	34.07	31.00	3.00	39.50	39.50	3.15	45.92	45.92	3.27	53.38	53.38	3.36
	1575	13.66	12.57	2.37	18.27	16.79	2.51	23.08	21.04	2.66	28.28	25.12	2.82	34.44	31.34	2.99	39.95	39.95	3.13	46.51	46.51	3.24	53.80	53.80	3.30
75 (23.9)	1225	12.34	11.35	2.47	16.88	15.52	2.61	21.61	19.70	2.77	26.65	23.67	2.94	33.00	30.03	3.15	38.34	38.34	3.32	44.52	44.52	3.47	51.81	51.81	3.62
	1400	12.62	11.61	2.49	17.21	15.81	2.62	22.00	20.06	2.77	27.12	24.09	2.93	33.48	30.46	3.13	38.87	38.87	3.28	45.18	45.18	3.42	52.61	52.61	3.52
	1575	12.87	11.84	2.52	17.50	16.08	2.64	22.35	20.37	2.78	27.51	24.43	2.93	33.87	30.82	3.12	39.31	39.31	3.26	45.75	45.75	3.38	53.11	53.11	3.46

See notes on pg. 29

HEAT PUMP HEATING PERFORMANCE

INDOOR AIR		OUTDOOR COIL ENTERING AIR TEMPERATURES ° F (° C)																							
		–3 (–19.4)			7 (–13.9)			17 (–8.3)			27 (–2.8)			37 (2.8)			47 (8.3)			57 (13.9)			67 (19.4)		
EDB ° F (° C)	CFM	Capacity MBtuh		Total Sys. KW†	Capacity MBtuh		Total Sys. KW†	Capacity MBtuh		Total Sys. KW†	Capacity MBtuh		Total Sys. KW†	Capacity MBtuh		Total Sys. KW†	Capacity MBtuh		Total Sys. KW†	Capacity MBtuh		Total Sys. KW†	Capacity MBtuh		Total Sys. KW†
		Total	Integ‡		Total	Integ‡		Total	Integ‡		Total	Integ‡		Total	Integ‡		Total	Integ‡		Total	Integ‡		Total	Integ‡	
CH13NA048–C Outdoor Section With FB4CNF048 Indoor Section																									
65 (18.3)	1400	18.42	16.95	3.14	23.65	21.74	3.21	28.90	26.35	3.28	35.25	31.31	3.40	40.02	36.42	3.48	45.07	45.07	3.56	50.81	50.81	3.66	57.16	57.16	3.81
	1600	18.80	17.30	3.19	24.10	22.15	3.24	29.38	26.79	3.30	35.74	31.74	3.40	40.52	36.87	3.46	45.69	45.69	3.53	51.59	51.59	3.61	58.17	58.17	3.72
	1800	19.15	17.61	3.24	24.47	22.49	3.28	29.81	27.18	3.33	36.14	32.10	3.41	40.97	37.28	3.46	46.22	46.22	3.52	52.24	52.24	3.59	58.97	58.97	3.66
70 (21.1)	1400	17.61	16.20	3.27	22.86	21.00	3.34	28.11	25.63	3.42	33.56	29.80	3.50	39.44	35.89	3.63	44.40	44.40	3.71	50.01	50.01	3.82	56.20	56.20	3.97
	1600	17.99	16.55	3.31	23.30	21.41	3.37	28.60	26.08	3.43	34.24	30.41	3.51	39.94	36.35	3.61	45.00	45.00	3.68	50.76	50.76	3.77	57.15	57.15	3.90
	1800	18.34	16.87	3.36	23.68	21.76	3.41	29.03	26.47	3.46	35.39	31.43	3.55	40.40	36.76	3.61	45.52	45.52	3.67	51.40	51.40	3.74	58.01	58.01	3.83
75 (23.9)	1400	16.74	15.40	3.41	22.00	20.22	3.48	27.27	24.87	3.56	32.66	29.01	3.65	38.91	35.41	3.79	43.75	43.75	3.87	49.22	49.22	3.98	55.27	55.27	4.15
	1600	17.12	15.75	3.45	22.44	20.62	3.51	27.77	25.32	3.57	33.25	29.53	3.65	39.42	35.87	3.77	44.33	44.33	3.84	49.95	49.95	3.93	56.19	56.19	4.07
	1800	17.47	16.07	3.50	22.83	20.98	3.55	28.20	25.71	3.60	33.75	29.98	3.66	39.83	36.24	3.77	44.84	44.84	3.83	50.57	50.57	3.90	57.03	57.03	4.01

INDOOR AIR		OUTDOOR COIL ENTERING AIR TEMPERATURES ° F (° C)																							
		–3 (–19.4)			7 (–13.9)			17 (–8.3)			27 (–2.8)			37 (2.8)			47 (8.3)			57 (13.9)			67 (19.4)		
EDB	CFM	Capacity MBtuh		Total Sys. KW†	Capacity MBtuh		Total Sys. KW†	Capacity MBtuh		Total Sys. KW†	Capacity MBtuh		Total Sys. KW†	Capacity MBtuh		Total Sys. KW†	Capacity MBtuh		Total Sys. KW†	Capacity MBtuh		Total Sys. KW†	Capacity MBtuh		Total Sys. KW†
		Total	Integ*		Total	Integ*		Total	Integ*		Total	Integ*		Total	Integ*		Total	Integ*		Total	Integ*		Total	Integ*	
CH13NA049–B Outdoor Section With FB4CNF048 Indoor Section																									
65 (18.3)	1400	16.12	14.83	2.88	21.41	19.68	3.00	26.99	24.60	3.14	33.01	29.32	3.30	40.20	36.58	3.50	46.56	46.56	3.66	53.98	53.98	3.85	62.59	62.59	4.07
	1600	16.47	15.15	2.92	21.82	20.05	3.04	27.46	25.04	3.16	33.59	29.83	3.30	40.74	37.07	3.48	47.21	47.21	3.63	54.83	54.83	3.79	63.65	63.65	3.97
	1800	16.79	15.44	2.96	22.18	20.39	3.07	27.87	25.41	3.19	34.09	30.28	3.31	41.17	37.46	3.48	47.76	47.76	3.62	55.53	55.53	3.76	64.36	64.36	3.90
70 (21.1)	1400	15.31	14.09	2.99	20.62	18.95	3.12	26.19	23.88	3.27	32.16	28.56	3.43	39.59	36.02	3.65	45.86	45.86	3.82	53.13	53.13	4.02	61.55	61.55	4.26
	1600	15.66	14.41	3.03	21.03	19.33	3.15	26.67	24.31	3.28	32.72	29.06	3.43	40.13	36.52	3.63	46.50	46.50	3.78	53.95	53.95	3.96	62.63	62.63	4.16
	1800	16.00	14.72	3.07	21.40	19.66	3.19	27.09	24.70	3.31	33.22	29.51	3.45	40.60	36.94	3.63	47.05	47.05	3.77	54.64	54.64	3.93	63.42	63.42	4.09
75 (23.9)	1400	14.48	13.32	3.11	19.73	18.14	3.25	25.34	23.10	3.40	31.26	27.77	3.56	38.02	34.60	3.76	45.17	45.17	3.99	52.29	52.29	4.19	60.51	60.51	4.45
	1600	14.82	13.63	3.15	20.14	18.51	3.28	25.82	23.54	3.41	31.83	28.27	3.57	39.49	35.93	3.78	45.79	45.79	3.95	53.08	53.08	4.13	61.61	61.61	4.35
	1800	15.14	13.93	3.19	20.51	18.85	3.31	26.25	23.93	3.44	32.33	28.72	3.58	39.94	36.35	3.78	46.34	46.34	3.93	53.76	53.76	4.10	62.44	62.44	4.28

See notes on pg. 29

HEAT PUMP HEATING PERFORMANCE

INDOOR AIR		OUTDOOR COIL ENTERING AIR TEMPERATURES °F (°C)																							
		–3 (–19.4)			7 (–13.9)			17 (–8.3)			27 (–2.8)			37 (2.8)			47 (8.3)			57 (13.9)			67 (19.4)		
EDB °F (°C)	CFM	Capacity MBtuh		Total Sys. KW†	Capacity MBtuh		Total Sys. KW†	Capacity MBtuh		Total Sys. KW†	Capacity MBtuh		Total Sys. KW†	Capacity MBtuh		Total Sys. KW†	Capacity MBtuh		Total Sys. KW†	Capacity MBtuh		Total Sys. KW†	Capacity MBtuh		Total Sys. KW†
		Total	Integ*		Total	Integ*		Total	Integ*		Total	Integ*		Total	Integ*		Total	Integ*		Total	Integ*		Total	Integ*	
CH13NA060–C Outdoor Section With FX4DN(B,F)061 Indoor Section																									
65 (18.3)	1825	23.52	21.64	3.67	29.80	27.38	3.77	35.99	32.82	3.87	42.31	37.58	3.97	49.56	45.10	4.13	55.29	55.29	4.26	62.11	62.11	4.37	67.98	67.98	4.52
	2082	24.07	22.15	3.74	30.40	27.93	3.82	36.64	33.40	3.90	43.07	38.25	3.99	50.22	45.70	4.13	56.04	56.04	4.23	62.79	62.79	4.32	68.30	68.30	4.44
	2339	24.58	22.61	3.80	30.93	28.43	3.88	37.20	33.92	3.94	43.80	38.90	4.02	50.76	46.19	4.14	56.79	56.79	4.22	63.20	63.20	4.30	68.44	68.44	4.40
70 (21.1)	1825	22.29	20.50	3.82	28.67	26.35	3.92	34.96	31.88	4.03	41.23	36.62	4.14	48.89	44.49	4.32	54.50	54.50	4.45	61.26	61.26	4.56	67.08	67.08	4.71
	2082	22.83	21.01	3.88	29.27	26.90	3.97	35.61	32.46	4.06	41.96	37.27	4.15	49.53	45.07	4.31	55.23	55.23	4.42	61.98	61.98	4.50	67.46	67.46	4.63
	2339	23.32	21.46	3.95	29.81	27.39	4.03	36.18	32.98	4.11	42.61	37.85	4.18	50.06	45.55	4.32	55.95	55.95	4.41	62.43	62.43	4.48	67.63	67.63	4.58
75 (23.9)	1825	21.01	19.33	3.97	27.50	25.27	4.08	33.90	30.90	4.20	40.18	35.69	4.31	48.13	43.79	4.51	53.73	53.73	4.65	60.43	60.43	4.76	66.25	66.25	4.91
	2082	21.54	19.81	4.03	28.10	25.82	4.13	34.53	31.48	4.23	40.89	36.32	4.33	48.80	44.41	4.50	54.43	54.43	4.61	61.17	61.17	4.70	66.64	66.64	4.82
	2339	22.02	20.26	4.10	28.62	26.30	4.19	35.10	32.00	4.27	41.50	36.86	4.36	49.38	44.94	4.51	55.10	55.10	4.61	61.64	61.64	4.67	66.83	66.83	4.77

INDOOR AIR		OUTDOOR COIL ENTERING AIR TEMPERATURES °F (°C)																							
		–3 (–19.4)			7 (–13.9)			17 (–8.3)			27 (–2.8)			37 (2.8)			47 (8.3)			57 (13.9)			67 (19.4)		
EDB	CFM	Capacity MBtuh		Total Sys. KW†	Capacity MBtuh		Total Sys. KW†	Capacity MBtuh		Total Sys. KW†	Capacity MBtuh		Total Sys. KW†	Capacity MBtuh		Total Sys. KW†	Capacity MBtuh		Total Sys. KW†	Capacity MBtuh		Total Sys. KW†	Capacity MBtuh		Total Sys. KW†
		Total	Integ*		Total	Integ*		Total	Integ*		Total	Integ*		Total	Integ*		Total	Integ*		Total	Integ*		Total	Integ*	
CH13NA061–B Outdoor Section With FB4CNF060 Indoor Section																									
65 (18.3)	1750	20.78	19.12	3.54	27.12	24.92	3.71	33.83	30.85	3.87	41.46	36.82	4.06	49.79	45.31	4.30	57.84	57.84	4.52	67.65	67.65	4.75	77.20	77.20	5.01
	2000	21.26	19.56	3.60	27.66	25.42	3.75	34.45	31.41	3.90	43.12	38.30	4.11	50.47	45.93	4.29	58.69	58.69	4.50	68.52	68.52	4.69	77.79	77.79	4.92
	2250	21.72	19.98	3.66	28.12	25.84	3.80	34.97	31.88	3.94	43.64	38.76	4.13	51.03	46.44	4.29	59.42	59.42	4.49	69.10	69.10	4.66	78.10	78.10	4.86
70 (21.1)	1750	19.73	18.15	3.68	26.14	24.02	3.85	32.88	29.97	4.03	40.37	35.85	4.23	49.08	44.67	4.49	57.00	57.00	4.72	66.71	66.71	4.96	76.18	76.18	5.22
	2000	20.21	18.59	3.74	26.68	24.52	3.90	33.49	30.53	4.05	41.10	36.50	4.24	49.76	45.28	4.47	57.83	57.83	4.68	67.58	67.58	4.89	76.81	76.81	5.12
	2250	20.65	19.00	3.80	27.17	24.96	3.95	34.03	31.03	4.09	41.74	37.07	4.27	50.30	45.77	4.48	58.53	58.53	4.68	68.20	68.20	4.86	77.17	77.17	5.07
75 (23.9)	1750	18.66	17.17	3.83	25.11	23.07	4.01	31.90	29.08	4.20	39.31	34.91	4.41	48.42	44.06	4.70	56.20	56.20	4.93	65.76	65.76	5.17	75.14	75.14	5.44
	2000	19.13	17.60	3.89	25.63	23.55	4.05	32.50	29.63	4.22	40.02	35.55	4.41	49.06	44.65	4.67	56.99	56.99	4.89	66.65	66.65	5.10	75.80	75.80	5.34
	2250	19.56	17.99	3.95	26.11	23.99	4.10	33.04	30.12	4.26	40.65	36.11	4.44	49.61	45.14	4.67	57.68	57.68	4.88	67.30	67.30	5.06	76.20	76.20	5.28

NOTE: When the required data fall between the published data, interpolation may be performed. Extrapolation is not an acceptable practice.

* The Btuh heating capacity values shown are net "integrated" values from which the defrost effect has been subtracted. The Btuh heating from supplement heaters should be added to those values to obtain total system capacity.

† The kW values include the compressor, outdoor fan motor, and indoor blower motor. The kW from supplement heaters should be added to these values to obtain total system kilowatts.

EDB = Entering Dry Bulb

GUIDE SPECIFICATIONS
GENERAL

System Description

Outdoor-mounted, air-cooled, split-system air conditioner unit suitable for ground or rooftop installation. Unit consists of a hermetic compressor, an air-cooled coil, propeller-type condenser fan, and a control box. Unit will discharge supply air upward as shown on contract drawings. Unit will be used in a refrigeration circuit to match up to a packaged fan coil or coil unit.

Quality Assurance

— Unit will be rated in accordance with the latest edition of AHRI Standard 210.

— Unit will be certified for capacity and efficiency, and listed in the latest AHRI directory.

— Unit construction will comply with latest edition of ANSI/ ASHRAE and with NEC.

— Unit will be constructed in accordance with UL standards and will carry the UL label of approval. Unit will have c-UL-us approval.

— Unit cabinet will be capable of withstanding Federal Test Method Standard No. 141 (Method 6061) 500-hr salt spray test.

— Air-cooled condenser coils will be leak tested at 150 psig and pressure tested at 450 psig.

— Unit constructed in ISO9001 approved facility.

Delivery, Storage, and Handling

— Unit will be shipped as single package only and is stored and handled per unit manufacturer's recommendations.

Warranty (for inclusion by specifying engineer)

— U.S. and Canada only.

PRODUCTS

Equipment

Factory assembled, single piece, air-cooled air conditioner unit. Contained within the unit enclosure is all factory wiring, piping, controls, compressor, refrigerant charge Puron® (R-410A), and special features required prior to field start-up.

Unit Cabinet

— Unit cabinet will be constructed of galvanized steel, bonderized, and coated with a powder coat paint.

— Single phase equipment available with dense grille only.

Fans

— Condenser fan will be direct-drive propeller type, discharging air upward.

— Condenser fan motors will be totally enclosed, 1-phase type with class B insulation and permanently lubricated bearings. Shafts will be corrosion resistant.

— Fan blades will be statically and dynamically balanced.

— Condenser fan openings will be equipped with coated steel wire safety guards.

Compressor

— Compressor will be hermetically sealed.

— Compressor will be mounted on rubber vibration isolators.

Condenser Coil

— Condenser coil will be air cooled.

— Coil will be constructed of aluminum fins mechanically bonded to copper tubes which are then cleaned, dehydrated, and sealed.

Refrigeration Components

— Refrigeration circuit components will include liquid-line shutoff valve with sweat connections, vapor-line shutoff valve with sweat connections, system charge of Puron® (R-410A) refrigerant, and compressor oil.

— Unit will be equipped with high-pressure switch, low pressure switch and filter drier for Puron refrigerant.

Operating Characteristics

— The capacity of the unit will meet or exceed _____ Btuh at a suction temperature of _____ °F/°C. The power consumption at full load will not exceed _____ kW.

— Combination of the unit and the evaporator or fan coil unit will have a total net cooling capacity of _____ Btuh or greater at conditions of _____ CFM entering air temperature at the evaporator at _____ °F/°C wet bulb and _____ °F/°C dry bulb, and air entering the unit at _____ °F/°C.

— The system will have a SEER of _____ Btuh/watt or greater at DOE conditions.

Electrical Requirements

— Nominal unit electrical characteristics will be _____ v, single phase, 60 hz. The unit will be capable of satisfactory operation within voltage limits of _____ v to _____ v.

— Unit electrical power will be single point connection.

— Control circuit will be 24v.

Special Features

— Refer to section of this literature identifying accessories and descriptions for specific features and available enhancements.

SYSTEM DESIGN SUMMARY

1. Intended for outdoor installation with free air inlet and outlet. Outdoor fan external static pressure available is less than 0.01-IN. W.C.
2. Minimum outdoor operating air temperature without low-ambient operation accessory is 55°F (12.8°C).
3. Maximum outdoor operating air temperature is 125°F (51.7°C).
4. For reliable operation, unit should be level in all horizontal planes.
5. For interconnecting refrigerant tube lengths greater than 80 ft (23.4 m) and/or 35 ft (10.7 m) vertical differential, consult Residential Piping and Longline Guideline and Service Manual available from equipment distributor.
6. If any refrigerant tubing is buried, provide a 6 in. (152.4 mm) vertical rise to the valve connections at the unit. Refrigerant tubing lengths up to 36 in. (914.4 mm) may be buried without further consideration. Do not bury refrigerant lines longer than 36 in. (914.4 mm).
7. Use only copper wire for electric connection at unit. Aluminum and clad aluminum are not acceptable for the type of connector provided.
8. Do not apply capillary tube indoor coils to these units.
9. Factory-supplied filter drier must be installed.

Copyright 2013 Carrier Corp. • 7310 W. Morris St. • Indianapolis, IN 46231

Edition Date: 03/13

Catalog No: CH13NA–06PD

Replaces: CH13NA–05PD

Manufacturer reserves the right to change, at any time, specifications and designs without notice and without obligations.