PG80ESU (Minor Series B&C)
80% AFUE, Ultra Low NOx,
4-Way Multipoise Gas Furnace

Troubleshooting Guide

Table of Contents:

SAFETY CONSIDERATIONS 1
INSTRUCTIONS 3
Start Here Section 3
GENERAL 4
SEQUENCE OF OPERATION 4
SERVICE/STATUS CODE INSTRUCTIONS 6
Rapid Flashing LED 9
Status Code 11 - No Previous Code 10
Status Code 12 - Blower on After Power Up 10
Status Code 13 - Limit Circuit Lockout 11
Status Code 14 - Ignition Lockout 13
Status Code 21 - Gas Heating Lockout. 13
Status Code 22 - Abnormal Flame-proving Signal. 14
Status Code 23 - Transducer Greater than 0.15” 14
Status Code 24 - Secondary Voltage Fuse Open 15
Status Code 25 - Setup Error 16
Status Code 26 - Wiring Harness 16
Status Code 31 - Transducer Does Not Sense Target Pressure 17
Status Code 34 - Ignition-Proving Failure 18
Status Code 42 - Inducer Motor Fault 20
Status Code 45 - Control Circuitry Lockout. 21
CLEAN UP AND STARTUP. 21
COMBUSTION TONE MITIGATION 22
APPENDIX A - Furnace Control Board Layout 23
APPENDIX B - Wiring and Connection Diagram 24
APPENDIX C - Transducer Pressure Check 25
APPENDIX D - Transducer Target Pressures 26
APPENDIX E - Static Pressure Reading Locations 27
QUICK REFERENCE INFORMATION. 29
Flame Sensor Microamperage 29
Hot Surface Igniter Reading 29
SERVICE TRAINING 30

SAFETY CONSIDERATIONS

⚠ WARNING

CARBON MONOXIDE POISONING HAZARD

Failure to follow this warning could result in personal injury and/or death.

Carbon Monoxide (CO) is a colorless, odorless, and tasteless poisonous gas that can be fatal when inhaled. Follow all installation, maintenance, and service instructions. See additional information below regarding the installation of a CO Alarm.

⚠ WARNING

FIRE, EXPLOSION, ELECTRICAL SHOCK, AND CARBON MONOXIDE POISONING HAZARD

Failure to follow this warning could result in dangerous operation, personal injury, death, or property damage.

Improper installation, adjustment, alteration, service, maintenance, or use can cause carbon monoxide poisoning, explosion, fire, electrical shock, or other conditions which may cause personal injury or property damage. Consult a qualified service agency, local gas supplier, or your distributor or branch for information or assistance. The qualified service agency must use only factory-authorized accessories and replacement parts when installing and servicing this product.

Improper installation, adjustment, alteration, service, maintenance, or use can cause explosion, fire, electrical shock, or other conditions which may cause death, personal injury, or property damage. Consult a qualified installer, service agency, or your distributor or branch for information or assistance. The qualified installer or agency must use factory-authorized kits or accessories when modifying this product. Refer to the individual instructions packaged with the kits or accessories when installing.

Installing and servicing heating equipment can be hazardous due to gas and electrical components. Only trained and qualified personnel should install, repair, or service heating equipment. Untrained personnel can perform basic maintenance functions such as cleaning and replacing air filters. All other operations must be performed by trained service personnel. When working on heating equipment, observe precautions in literature, on tags, and on labels attached to or shipped with furnace and other safety precautions that may apply.

These instructions cover minimum requirements and conform to existing national standards and safety codes. In some instances, these instructions exceed certain local codes and ordinances, especially those that may not have kept up with changing residential construction practices. We require these instructions as a minimum for a safe installation.

This is the safety-alert symbol ⚠. When you see this symbol on the furnace and in instructions or manuals, be alert to the potential for personal injury.

Follow all safety codes. Wear safety glasses, protective clothing, and work gloves. Have a fire extinguisher available. Read these instructions thoroughly and follow all warnings or cautions included in literature and attached to the unit.

Understand the signal words DANGER, WARNING, and CAUTION. These words are used with the safety-alert symbol. DANGER identifies the most serious hazards which will result in severe personal injury or death. WARNING signifies a hazard which could result in personal injury or death. CAUTION is used to identify hazards which may result in minor personal injury or product and property damage. NOTE and NOTICE are used to highlight suggestions which will result in enhanced installation, reliability, or operation.

⚠ WARNING

FIRE, EXPLOSION, ELECTRICAL SHOCK AND CARBON MONOXIDE POISONING HAZARD

Failure to follow instructions could result in personal injury, death or property damage.

Improper installation, adjustment, alteration, service, maintenance, or use can cause carbon monoxide poisoning, explosion, fire, electrical shock, or other conditions, which could result in personal injury or death. Consult your distributor or branch for information or assistance. The qualified installer or agency must use only factory-authorized kits or accessories when servicing this product.

⚠ WARNING

FIRE, EXPLOSION, ELECTRICAL SHOCK HAZARD

Failure to follow this warning could result in personal injury, death or property damage.

Gas supply MUST be shut off before disconnecting electrical power and proceeding with conversion.

⚠ WARNING

ELECTRICAL SHOCK, FIRE OR EXPLOSION HAZARD

Failure to follow this warning could result in personal injury, death or property damage.

Before installing, modifying, or servicing system, main electrical disconnect switch must be in the OFF position and install a lockout tag. There may be more than one disconnect switch. Lock out and tag switch with a suitable warning label. Verify proper operation after servicing.

⚠ CAUTION

UNIT OPERATION HAZARD

Failure to follow this caution may result in unit damage or improper operation.

Do NOT use this kit with furnaces with an input of 26,000 BTUh; the unit will be severely over-fired. This could result in delayed ignition, sooting or premature heat exchanger failure.

MODEL NUMBER NOMENCLATURE

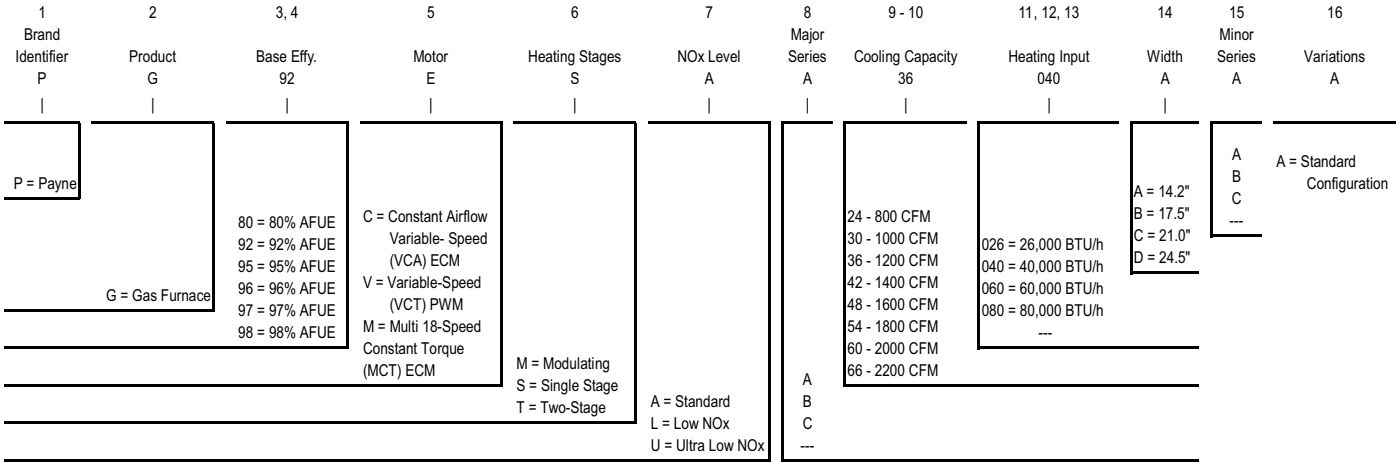

A220583

INSTRUCTIONS

This guide uses your expertise and observations to lead you to the trouble spot as efficiently as possible. This is only intended as a guide and should not be used blindly. Your experience and expertise are of high value when troubleshooting this unit. Do not disregard your instincts.

The furnace control was designed with diagnostic capabilities built in. An AMBER LED is used to flash a status code which will lead you to one of the sections as listed in the Index.

You should ALWAYS begin in the START HERE section (see Index for page number) which will guide you to the appropriate section where a minimal number of steps will be used to correct the problem. Once in a section, read the ACTION. An ACTION may have a number in the GO TO column. Do whatever the ACTION says, then proceed to the step indicated in the GO TO column.

If the ACTION is a question (a question will have a number in the YES or NO column), answer YES or NO. If the answer is YES, go to the step indicated in the YES column. If the answer is NO, go to the step indicated in the NO column.

Let's try our guide out using the EXAMPLE section below and see how it works. Suppose that the problem is a defective Limit Switch (for example the contacts will not re-close). This is an internal problem and cannot simply be seen. We go to the START HERE section to Step 1.

EXAMPLE

Start Here Section

STEP	ACTION	YES	NO	GO TO
1.	Step 1 tells us to remove main furnace door first and NOT TO REMOVE THE BLOWER ACCESS PANEL. It then asks the question, "Is AMBER LED status light on?". If the Limit switch was defective, a limit circuit lockout status code would be flashing, so the answer is YES. We go to Step 2.	2	19	
2.	Step 2 asks the question, "Is the AMBER LED status light blinking rapidly without a pause?". If the limit switch was defective a limit circuit lockout status code would be flashing, so the answer is NO. We go to Step 4.	3	4	
3.	Step 4 asks the question, "Is the AMBER LED status light blinking ON/OFF slowly with a combination of short and long flashes?". If the limit switch was defective, a limit circuit lockout status code would be flashing, so the answer is YES. We go to Step 5.	5	7	
4.	Step 5 tells us to determine the status code. The status code is a 2-digit number with the first digit determined by the number of short flashes and the second digit by the number of long flashes. We count the short and long flashes and see that status code 13 is flashing and go to Step 6.			6
5.	Step 6 tells us to go to status code 13 section			INDEX

Manufacturer reserves the right to change, at any time, specifications and designs without notice and without obligations.

GENERAL

The furnace must have a 115-VAC power supply properly connected and grounded. Correct polarity must be maintained to enable gas heating operation.

The gas service pressure must not exceed 0.5 psig (14-in. w.c.), and no less than 0.16 psig (4.5-in. w.c.).

Thermostat wire connections to the furnace at R and W are the minimum required for gas heating operation. Y is required to be connected to the furnace for single-stage cooling and heat pumps. G is required for continuous fan. COM-24V is required for some thermostats. These connections must be made at the 24-VAC terminal block on the furnace control. (See Appendix A)

Before operating the furnace, check each manual reset switch for continuity. If necessary, press and release the button to reset the switch.

SEQUENCE OF OPERATION

Using the schematic diagram in Appendix A, follow the sequence of operation through the different modes. Read and follow the wiring diagram very carefully.

NOTE: If a power interruption occurs during a call for heat, the control will start a 90-second blower-only ON period two seconds after power is restored if the thermostat is still calling for gas heating. The LED light will flash code 12 during the 90-second period, after which the LED will be ON continuous, as long as no faults are detected. After the 90-second blower-on period, the furnace will respond to the thermostat normally.

The blower access panel must be installed for power to be conducted through the blower door interlock switch ILK to the furnace control CPU, transformer TRAN, inducer motor IDM, blower motor BLWM, hot-surface igniter HSI, and gas valve GV.

1. **Heating Mode:** The wall thermostat “calls for heat”, closing the R-W circuit. The furnace control performs a self-check, verifies the transducer reads no pressure present, and starts the inducer motor IDM ramp to prepurge pressure
   a. **Inducer Prepurge Period:** The furnace control CPU ramps up the inducer motor IDM to prepurge pressure then the furnace control CPU begins a 15-second prepurge period. If the transducer fails to reach target pressure the inducer motor IDM will remain running until target pressure is maintained.
   b. **Igniter Warm-Up:** At the end of the prepurge period, the Hot-Surface Igniter HSI is energized for a 17-second igniter warm-up period. Inducer maintains pressure during igniter warm-up.
   c. **Trial for Ignition:** When the igniter warm-up period is completed the main gas valve relay contact GVR closes to energize the gas valve solenoid GV. The gas valve solenoid GV permits gas flow to the burners where it is ignited by the HSI. Five seconds after the GVR closes, a 2-second flame proving period begins. The HSI igniter will remain energized until the flame is sensed or until the 2-second flame proving period begins.
   d. **Flame Proving:** When the burner flame is proved at the flame sensor electrode FSE, the inducer motor IDM will increase speed (after a short delay of 14 seconds on some models) to a higher RUN pressure. The control will maintain this pressure once reached, and the furnace control CPU will begin the blower-ON delay period while continuing to hold the gas valve GV open. If the burner flame is not proved within the 2-second flame proving period, the control CPU will open the gas valve relay GVR, de-energizing the gas valve solenoid GV. The control CPU will repeat the ignition sequence for up to three more Trials-For-Ignition before going to an Ignition-Lockout. Lockout will be reset automatically after three hours, or by momentarily interrupting 115-VAC power to the furnace, or by interrupting 24-VAC power at SEC1 or SEC2 to the furnace control CPU (not at W, G, R, etc.). If flame is proved when flame should not be present, the furnace control CPU will lock out of Heating mode and operate the inducer motor IDM until flame is no longer proved.
   e. **Blower-On-Delay:** If the burner flame is proven a 25-second blower-ON delay begins from when the gas valve GV is opened. The blower motor BLWM is turned ON at heat airflow. Simultaneously, the humidifier terminal HUM and electronic air cleaner terminal EAC-1 are energized and remain energized throughout the heating cycle.
   f. **Blower-Off-Delay:** When the thermostat is satisfied, the R to W circuit is opened, de-energizing the gas valve GV, stopping gas flow to the burners, and de-energizing the humidifier terminal HUM. The inducer motor IDM will remain energized for a 15-second post-purge period. The blower motor BLWM and air cleaner terminal EAC-1 will remain energized at heat airflow for 90, 120, 150, or 180 seconds (depending on selection at blower-OFF delay switches). The furnace control CPU is factory-set for a 120-second blower-OFF
2. **Cooling Mode:** The thermostat closes the R-G and -Y circuit for cooling. The R-Y circuit starts the outdoor unit on cooling speed, and the R-G and -Y circuit starts the furnace blower motor BLWM at cooling airflow. Cooling airflow (Table 5) is based on the motor wire lead selection used on the COOL terminal. The electronic air cleaner terminal EAC-1 is energized with 115-VAC whenever the blower motor BLWM is operating. When the thermostat is satisfied, the R-G and -Y circuit is opened. The outdoor unit stops, and the furnace blower BLWM and electronic air cleaner terminal EAC-1 will remain energized for an additional 90 seconds. Remove J2 Jumper to reduce the cooling off-delay to 5 seconds.
3. **Continuous Blower Mode:** When the R-G circuit is closed by the thermostat, the blower motor BLWM will operate at FAN tap. Terminal EAC-1 is energized as long as the blower motor BLWM is energized. During a call for heat, the furnace control CPU will transition the blower motor BLWM to FAN tap. The blower motor BLWM will remain ON until the main burners ignite then shut OFF and remain OFF for 25 seconds before coming back on at HEAT tap. The blower motor BLWM will revert to FAN tap after the heating cycle blower off-delay is completed. When the thermostat “calls for cooling”, the blower motor BLWM will switch to operate at COOL tap. When the thermostat is satisfied, the blower motor BLWM will operate an additional 90 seconds at cooling airflow before transitioning back to FAN tap. When the R-G circuit is opened, the blower motor BLWM will continue operating for an additional 5 seconds if no other function requires blower motor BLWM operation.
4. **Heat Pump:** When installed with a heat pump, the furnace control automatically changes the timing sequence to avoid long blower off times during demand defrost cycles. Whenever the R-W circuit is closed along with the R-Y circuit, the furnace control CPU will transition to or bring on the blower motor BLWM at COOL tap. The blower motor BLWM will remain on until the main burners ignite then shut OFF and remain OFF for 25 seconds before coming back on at HEAT tap. When the R-W connection is opened, the furnace control begins a normal inducer post-purge period while changing the blower airflow. If R-Y circuit is still closed, the furnace control CPU will transition the blower motor BLWM airflow to COOL tap. If R-G circuit is open, the blower motor BLWM will remain on HEAT tap for the selected blower-OFF delay period. At the end of the blower-OFF delay, the blower motor BLWM will shut OFF unless R-G is circuit is closed, in which case the blower motor BLWM will operate at FAN tap.

Manufacturer reserves the right to change, at any time, specifications and designs without notice and without obligations.

5. **Component Test:** The furnace features a component test feature to help diagnose a system problem in the case of a component failure. To initiate the component test sequence, shut OFF the room thermostat or disconnect the R thermostat lead. Briefly short the TEST/TWIN terminal to the C terminal. Status LED will flash most recent code 4 times and then turn ON the inducer motor. The inducer motor will run for the entire component test. The hot surface igniter, blower motor fan speed, blower motor-heat speed, and blower motor-cool speed will be turned ON for 10-15 seconds each. Gas Valve and Humidifier will not be turned on.
   NOTE: The component test feature will not operate if the control is receiving any thermostat signals or until all time delays have expired.

The component test sequence is as follows:

1. Inducer relay ON 50% ULN80 for 15 sec., then proceed to Step 2. Inducer to remain ON throughout the test.
2. HSI relay ON for 15 sec., then OFF.
3. Blower motor FAN Speed for 10 sec., then OFF.
4. Blower motor HEAT Speed for 10 sec., then OFF.
5. Blower motor COOL Speed for 10 sec., then OFF.
6. Inducer OFF, end of test

NOTE: The EAC terminals are energized when the blower is operating

Wiring Diagrams

Refer to Fig. 3 for wiring diagram.

Troubleshooting

Referring to the service label and wiring diagram can be a useful tool in isolating furnace operation problems. This Troubleshooting Guide will help to identify the problem or failed component. After replacing any component, verify correct operation sequence

SERVICE/STATUS CODE INSTRUCTIONS

If status code recall is needed disconnect the “R” thermostat lead, reset power, and put setup switch “SW1-1” in the ON position. To clear the status code history put setup switch “SW1-1” in the ON position and jumper thermostat terminals “R”, “W/W1”, and “Y/Y2” simultaneously until status code #11 is flashed.

LED CODES	STATUS
CONTINUOUS OFF	Check for 115VAC at L1 and L2, and 24VAC at SEC-1 and SEC-2
CONTINUOUS ON	Control has 24VAC power.
RAPID FLASHING	Line voltage (115VAC) polarity reversed.

Each of the following status codes is a two digit number with the first digit determined by the number of short flashes and the second digit is the number of long flashes.

LED ACTIVITY (CFH = Call for Heat)

11 **NO PREVIOUS CODE** - Stored status codes are erased automatically after 72 hours or as specified above.

12 **BLOWER ON AFTER POWER UP (115VAC or 24VAC)** - Blower runs for 90 seconds, if unit is powered up during a call for heat (R-W closed) or (R-W opens) during a blower on-delay period.

13 **LIMIT CIRCUIT LOCKOUT** - Lockout occurs if a limit, draft safeguard, burner thermal switch or blocked vent switch (if used) is open. Control will auto-reset after three hours. Check for:
- Loose blower wheel
- Restricted vent
- Proper vent sizing
- Excess wind
- Dirty filter or restricted duct system
- Defective switch or connections
- Inadequate combustion air supply (Burner thermal switch open)

14 **IGNITION LOCKOUT** - Control will auto-reset after three hours. Refer to status code #34.

21 **GAS HEATING LOCKOUT** - Control will NOT auto-reset. Check for:
- Mis-wired gas valve
- Defective control (valve relay)
- 24VAC sensed at gas valve when should not be present

22 **ABNORMAL FLAME - PROVING SIGNAL** - Flame is provided while gas valve is de-energized, inducer will run until fault is cleared. Check for:
- Leaky gas valve
- Stuck-open gas valve

23 **PRESSURE** > 0.15-in. w.c. AT START-UP. Check for:
- Obstruction in pressure tubing or Transducer vent holes
- Defective Transducer
-Transducer wiring

24 **SECONDARY VOLTAGE FUSE IS OPEN.** Check for:
- Short circuit in secondary voltage (24VAC) wiring

25 **INVALID MODEL SELECTION OR SETUP ERROR** - Indicated either the model plug is missing or incorrect. If code flashes 4 times
on power-up control is defaulting to model selection stored in memory

31 **PRESSURE TRANSDUCER INPUT DOES NOT SENSE TARGET PRESSURE OR PRESSURE IS OUT OF RANGE**. Check for:
- Excessive wind- Proper vent sizing
- Restricted vent
- Defective inducer motor
- Inadequate combustion air supply
- Defective pressure transducer
- Low inlet gas pressure (if LGPS used)
- Low inducer voltage (115VAC)
- Disconnected or obstructed pressure tubing

34 **IGNITION PROVING FAILURE** - Control will try ignition four times before lockout #14 occurs. If flame signal lost during blower on-delay period, blower will come on for the selected blower off-delay. Check for:
- Oxide buildup on flame sensor (clean with fine steel wool)
- Proper flame sense microamps (.5 microamps D.C. Min., 4.0 - 6.0 nominal)
- Manual valve shut-off- Low inlet gas pressure
- Control ground continuity
- Gas valve defective or turned off
- Flame sensor must not be grounded or touching casing
- Inadequate flame carryover or rough ignition
- Green/Yellow wire MUST be connected to furnace sheet metal

Manufacturer reserves the right to change, at any time, specifications and designs without notice and without obligations.

42 **INDUCER MOTOR FAULT** the RPM pulses are not detected from the inducer motor within 20 seconds after a heat request the inducer is outside of its valid range of operation, or the inducer RPM signal was lost for 5 seconds during operation.
Check for:
- Proper vent sizing
- Restricted combustion air supply
- Failed inducer motor
- Improper or loose motor wiring or bad connection

45 **CONTROL CIRCUITARY LOCKOUT** Auto-reset after one hour lockout due to:
- Gas valve relay stuck open
- Flame sense circuit failure
- Software check error

Reset power to clear lockout. Replace control if status code repeats.

COMPONENT TEST

To initiate the component test sequence, shut OFF the room thermostat or disconnect the “R” thermostat lead. Briefly short the TEST/TWIN terminal to the “C” terminal. Status LED will flash most recent code 4 times and then turn ON the inducer motor.

The inducer motor will run for the entire component test. The hot surface igniter, blower motor fan speed, blower motor-heat speed, and blower motor-cool speed will be turned ON for 10-15 seconds each. Gas Valve and Humidifier will not be turned on.

LED CODES	STATUS
11	Indicated the blower motor tested OK. Visual check of inducer motor and hot surface igniter required.
25	SETUP ERROR - Reference code 25 on left
42	INDUCER MOTOR FAULT - Indicates inducer motor failed test. Check inducer, wiring, furnace control and tubing for poor connections

START HERE

If a problem exists, the service technician should always begin troubleshooting here.

⚠ NOTICE

SPECIAL NOTE: All voltmeters are not the same - Your voltage readings may vary. This applies to the entire content of this troubleshooting manual. They are not absolute values. Correct 115-VAC voltage, current, and power measurements cannot be taken on variable speed furnaces using a true RMS meter.

STEP	ACTION	YES	NO	GO TO
1.	Remove main furnace door first. DO NOT REMOVE BLOWER ACCESS PANEL! Record status of AMBER LED. See Service/Status Code Instructions. Is AMBER LED status light on?	2	16	
2.	Is the AMBER LED status light blinking rapidly without a pause?	3	4	
3.	Go to the page number indicated in the Index for RAPID FLASHING LED.			INDEX
4.	Is the AMBER LED status light blinking ON/OFF slowly with a combination of short and long flashes?	5	7	
5.	Determine status code. The status code is a 2-digit number with the first digit determined by the number of short flashes and the second digit by the number of long flashes.			6
6.	Go to page number indicated in the Index for the section covering the status code.			INDEX
7.	To retrieve previous codes, no thermostat inputs to the control must be present and all time-delays must have expired. Disconnect the R thermostat lead from the furnace control board and wait for the blower to turn off if it is running. Briefly (2-3 seconds) remove then reconnect one main limit or draft safeguard wire to display stored status code. Previous status codes may also be recalled by momentarily shorting the TEST/TWIN terminal to Com24V terminal until the LED goes out. After status code recall is completed, component self-test will occur.			8
8.	Was there a previous status code other than code 11? Note: Status codes are erased after 72 hours	9	10	
9.	Go to page number indicated in the Index for the section covering the first previous status code.			INDEX
10.	Reconnect the R thermostat lead, set the thermostat fan control to AUTO position if equipped, and set the thermostat to call for heat.			11
11.	Does the furnace respond to the call for heat?	12	25	
12.	Observe operation of furnace for 20 minutes or until AMBER LED status light starts blinking.			13
13.	Does the AMBER LED status light blink ON/OFF slowly with a combination of short and long flashes?	5	14	
14.	Is the temperature rise above or below the range specified on the rating plate when the unit is operating? Refer to the Start-Up and Adjustment section in the Installation, Start-Up, and Operating Instructions.			15
15.	Go to page number indicated in Index for CLEANUP AND START-UP INSTRUCTIONS.			INDEX
16.	Make sure power is being supplied to the furnace.			17
17.	Check fuses, breakers, or manual disconnects to be sure they are correctly set. If not, reset them and go back to step 1.			18
18.	Remove blower access panel and depress door switch. Use a piece of tape to hold switch closed.			19
19.	Is 115-VAC across L1 and L2?	21	20	
20.	Turn power off. Check continuity of power leads and door switch. If necessary, repair power leads and/or replace door switch.			15
21.	Is 24-VAC across SEC-1 and SEC-2?	22	23	
22.	Replace the furnace control.			18
23.	Is 115-VAC across the transformer primary leads?	24	22	
24.	Replace the transformer.			15
25.	Is 24-VAC across W and COM-24V on the furnace control?	27	26	
26.	You have a defective thermostat, or a break in wiring between thermostat and furnace. Fix problem.			15
27.	Disconnect all thermostat leads and jumper R to W. Does the furnace respond to the call for heat?	28	22	
28.	You have an incompatible thermostat. Do any of the following: 1. Wire the thermostat C terminal to COM-24V. 2. Isolate the W input with a relay. 3. Install ballast resistor across W and COM-24V. 4. Replace the thermostat with a compatible model.			15

Manufacturer reserves the right to change, at any time, specifications and designs without notice and without obligations.

Rapid Flashing LED

Indicates that line voltage polarity is reversed.

STEP	ACTION	YES	NO	GO TO
1.	Is this furnace twinned with another furnace?	7	2	
2.	Remove blower access panel and depress door switch. Use a piece of tape to hold switch closed.			3
3.	Is 115-VAC across NEUTRAL-L2 and chassis ground?	4	6	
4.	Line voltage polarity is reversed. Fix problem.			5
5.	Go to page number indicated in Index for CLEANUP AND START- UP INSTRUCTIONS.			INDEX
6.	Replace the furnace control.			5
7.	Remove blower access panels and depress door switch in each unit. Use tape to hold switches closed.			8
8.	Is the AMBER LED status light blinking rapidly in only one of the twinned units?	9	16	
9.	Are the fuses, breakers, or manual disconnect on the problem unit correctly set?	11	10	
10.	Fix problem.			5
11.	Are the Auxiliary Limit switches properly set?	12	10	
12.	Do you have 115-VAC across L1 and NEUTRAL-L2 in the problem unit?	13	15	
13.	Do you have 24-VAC across SEC-1 and SEC-2 in the problem unit?	16	14	
14.	Replace the transformer.			5
15.	Turn power off to both units. Check continuity of power leads and door switch in the problem unit. If necessary, repair power leads and/or replace door switch in the problem unit.			5
16.	Check the furnace circuit breaker location in the service panel. On single-phase (residential) systems, each furnace circuit breaker should be located directly across from each other in service panel, or each furnace circuit breaker should be located on the same side of service panel but must skip 1 space to be connected to the same leg of the 1-phase power supply. On 3-phase (commercial) systems, each furnace circuit breaker should be located directly across from each other in service panel, or each furnace circuit breaker should be located on the same side of service panel but must skip 2 spaces to be connected to the same leg of the 3-phase power supply.			17
17.	Check the 115-VAC power lead connections at the furnace control of each furnace. The BLACK lead goes to L1 and the WHITE lead goes to NEUTRAL-L2.			18
18.	Depress and use a piece of tape to hold door switch closed on both units. Turn power on to both units			19
19.	Do you have 0-VAC shown when measuring from L1 on one unit to L1 of the second unit?	20	16	
20.	Check the 115-VAC transformer lead connections at the furnace control of each furnace. The BLACK lead goes to L1 and the WHITE lead goes to NEUTRAL-L2.			21
21.	If the circuit breaker location and the 115-VAC wiring is correct, reverse the transformer secondary lead connections SEC-1 and SEC-2 in the MAIN furnace.			5

Manufacturer reserves the right to change, at any time, specifications and designs without notice and without obligations.

Status Code 11 - No Previous Code

Stored status codes are erased after 72 hours Run system through a heating or cooling cycle to check system.

STEP	ACTION	YES	NO	GO TO
1.	No Previous Fault Codes – Stored status codes are erased automatically after 72 hours			INDEX

Status Code 12 - Blower on After Power Up

Blower will run for 90 seconds when furnace power is interrupted and later restored during a call for heat (R-W closed) or if the call for heat is interrupted (R-W opens) during the blower on-delay period.

STEP	ACTION	YES	NO	GO TO
1.	Remove the blower access panel and disconnect the W thermostat lead from the furnace control			2
2.	Depress the door switch. Use piece of tape to hold it closed.			3
3.	Set the thermostat to call for heat and set the fan control to the AUTO position (if equipped). Reconnect the W thermostat lead to the furnace control			4
4.	Does the furnace keep repeating the following cycle? Induced draft motor starts and runs for less than 5 seconds, induced draft motor IDM stops, blower motor BLWM runs for 90 seconds while AMBER LED status light flashes status code 12.	5	14	
5.	Do you have less than 18-VAC across R and COM-24V on the furnace control?	6	14	
6.	Do you have less than 90-VAC across L1 and NEUTRAL-L2 on the furnace control?	7	10	
7.	Make sure wire gage between main fuse box and furnace complies with wire size specification in Installation, Start-Up, and Operating Instructions.			8
8.	Fix problem.			9
9.	Go to the page number indicated in Index for the CLEANUP AND START-UP INSTRUCTIONS.			INDEX
10.	Disconnect the R thermostat lead			11
11.	Do you have less than 19-VAC across the R and COM24V on the furnace control?	12	13	
12.	Replace transformer			8
13.	The thermostat or the thermostat wires are loading down the transformer. Replace the thermostat or repair the thermostat wires			8
14.	Does the furnace keep repeating the following cycle? Induced draft motor starts and runs for more than 15 seconds, induced draft motor IDM stops, blower motor BLWM runs for 90 seconds while AMBER LED status light flashes status code 12.	15	24	
15.	Disconnect the Igniter at PL13			16
16.	Does the furnace still abruptly shut down as described in Step 14.	20	17	
17.	Does the furnace display a fault code 34?	18	19	
18.	There is a short in the igniter wiring or igniter			8
19.	Reconnect the igniter at PL13			20
20.	Does the furnace keep repeating the following cycle? Induced draft motor starts and runs for 30 seconds, Gas Valve Relay clicks, induced draft motor IDM stops, blower motor BLWM runs for 90 seconds while AMBER LED status light flashes status code 12.	21	25	
21.	Disconnect the humidifier lead (if used) from HUM terminal on the furnace control.			22
22.	Does the furnace still alternately cycle induced draft motor IDM and blower motor BLWM as described in Step 20.	23	24	
23.	There is a short in the gas valve GV or wiring to gas valve GV.			8
24.	There is a direct short in wiring to humidifier solenoid coil, diode bridge (if used), or humidifier solenoid coil.			8
25.	Power to the furnace was probably interrupted or line voltage was too low during a call for heat. This is normal operation. Go to the page number indicated in Index for the CLEANUP AND START-UP INSTRUCTIONS.			INDEX

Manufacturer reserves the right to change, at any time, specifications and designs without notice and without obligations.

Status Code 13 - Limit Circuit Lockout

Lockout occurs if a limit, draft safeguard, burner thermal switch or blocked vent switch (if used) or blower auxiliary limit switch is open. Control will auto-reset after three hours. Blower will run for 4 minutes or until limit switch closes, whichever is longer.

STEP	ACTION	YES	NO	GO TO
1.	Turn power off, remove the blower access panel, and disconnect the R thermostat lead from the furnace control board.			2
2.	Depress the blower door switch. Use a piece of tape to hold it closed. Turn power on			3
3.	Does status code 13 flash?	24	4	
4.	Does a different status code flash?	5	6	
5.	Go to page number indicated in the Index for the section covering the status code.			INDEX
6.	Jumper R and W thermostat terminals.			7
7.	Observe the furnace operation for at least 20 minutes or until status code starts flashing.			8
8.	Does status code 13 flash?	12	9	
9.	Does a different status code flash?	5	11	
10.	Fix Problem			11
11.	Go to page number indicated in Index for CLEANUP AND START- UP INSTRUCTIONS.			INDEX
12.	Did blower motor start?	21	13	
13.	Hook an AC voltmeter across PL15 L1 Black (+) and PL15 L2 White (-). Is 115-VAC across PL15 L1 Black (+) and PL15 L2 White (-)?	17	14	
14.	Is the Black L1 blower lead connected to the BL motor output on the furnace control?	15	10	
15.	Is the White L2 blower lead connected to one of the Neutral-L2 output taps on the furnace control?	16	10	
16.	You have an open wire or bad terminal on either the BLACK L1 or WHITE L2 wire between the furnace control and the blower motor. Repair or replace blower motor harness.			10
17.	Hook an AC voltmeter across the Blower Heat speed output tap (+) and the blower COM connection (-) at the 24V MTR tap connections on the furnace control. Is 24-VAC across Blower Heat speed output tap (+) and the blower COM connection (-)?	18	29	
18.	Hook an AC voltmeter across the PL16 blower lead attached to heat speed (+) and PL15 Com GREEN (-) at blower motor. Is 24-VAC across the PL16 blower lead attached to heat speed (+) and PL15 Com GREEN (-)?	19	20	
19.	Replace blower motor			10
20.	You have an open wire on either the heat speed tap or the blower speed COM of the 24V signal wires to the blower motor.			10
21.	Remove jumper from the R and W terminals and allow blower motor to run for 10 minutes or until blower shuts off			22
22.	Did blower shut off before 10 minutes?	24	23	
23.	Turn power OFF		71	
24.	Is 24vac across connector terminal PL1-6 and COM-24V on the furnace control?	30	25	
25.	Turn power off			26
26.	Disconnect PL1 from furnace control.			27
27.	Turn power off at main disconnect, remove tape from door switch, and remove jumper across R and W/W1.			28
28.	Is blower wheel firmly mounted on motor shaft?	29	24	
29.	Does the model plug PL4 match the part number specified on the Model Plug Chart in upper left-hand corner of wiring schematic?	31	30	
30.	Replace model plug.			10
31.	Does furnace have the proper limit switch, limit shield, blower baffle (if used), and rear air baffle (if used)? If so, are the limit switch, limit shield, and heat exchangers properly aligned?	27	24	
32.	Is blower wheel firmly mounted on the blower shaft?	33	10	
33.	Do you have continuity across limit switch (LS)?	50	34	
34.	Allow limit switch (LS) to cool for 10 minutes. Do you have continuity across the limit switch (LS)?	36	35	
35.	Replace limit switch (LS).			
36.	Turn power on and jumper the R and W thermostat terminals. Allow furnace to operate for 20 minutes or until status code starts flashing			37
37.	Does status code 13 flash?	39	38	
38.	Does a different status code flash?	5	11	
39.	Is the furnace considerably over-fired? (10% or more?) Clock input rate. Do not use manifold pressure method.	40	41	
40.	Ensure that gas inlet pressure and orifice is correct. Adjust gas valve pressure to achieve proper input rate per the Installation, Start Up, and Operating Instructions.			10
41.	Is temperature rise within range?	42	45	
42.	Turn power off and install a temperature probe in front of limit switch button.			43
43.	Turn power on and cycle unit. Does the limit switch open at a temperature at least 15 deg. F. below the temperature setpoint of the switch? (Example - setpoint of switch is 175 deg. F. but switch opens at a temperature below 160 deg. F.)	35	44	
44.	Problem may be related to poor air distribution or excessive pressure drop across the filter. Check filter and return air grills for blockage. Add turning vanes, more supply openings, or more return air openings.			10
45.	Does the installation have a bypass humidifier or zoning system bypass?	46	48	
46.	Is temperature rise of return air from bypass greater than 15 deg. F?	47	48	
47.	Bypass is oversized. Adjust damper or replace with properly sized bypass.			10
48.	Can blower speed be adjusted to raise airflow delivered?	49	44	

Manufacturer reserves the right to change, at any time, specifications and designs without notice and without obligations.

STEP	ACTION	YES	NO	GO TO
49.	Turn power off and adjust blower speed to achieve higher airflow			36
50.	Do you have continuity across the draft safeguard switch (DSS)?	54	51	
51.	Allow draft safeguard switch (DSS) to cool for 10 minutes. Do you have continuity across the draft safeguard switch (DSS)?	53	52	
52.	Replace draft safeguard switch.			10
53.	You may have excessive restriction in the vent system. Check the following - Restriction in vent pipe - Proper vent sizing for application - Elbow baffle installed incorrectly in inducer outlet vent elbow NOTE: If there are no signs of restriction, check for high winds. If there was no excessive wind, replace the Draft Safeguard switch.			10
54.	Unplug the Blower Auxiliary limit switch connection at PL17. Measuring on the PL17 half that leads to the blower housing, do you have continuity across PL17-1 and PL17-2?	68	55	
55.	Allow the blower auxiliary limit switches (ALS) to cool for 10 minutes. Do you have continuity across the blower auxiliary limit switches (ALS))?	57	56	
56.	Measure each (ALS) switch individually for continuity, and replace one or both that fail continuity test			10
57.	Reconnect the Blower auxiliary limit switches (ALS) connection PL17			58
58.	Turn power on and jumper the R and W thermostat terminals. Allow furnace to operate for (2) 20-minute cycles or until status code starts flashing			59
59.	Does status code 13 flash?	61	60	
60.	Does a different status code flash?	5	11	
61.	Does the blower motor stop suddenly while running a heating cycle?	62	65	
62.	Remove jumper from the R and W terminals and allow blower motor to complete its blower-off delay			63
63.	Turn power off			64
64.	Inspect blower harness connections at furnace control and (if applicable) at motor. If no harness defects are found, replace blower motor			10
65.	Remove jumper from the R and W terminals and allow blower motor to complete its blower-off delay			66
66.	Turn power off			67
67.	Remove the blower housing and inspect the auxiliary blower switch harness paying particular attention to where the harness meets the corners of the housing. If no defects are found, replace both blower auxiliary limit switches			10
68.	Reconnect the Blower auxiliary limit switches (ALS) connection PL17			69
69.	Do you have continuity across the burner thermal switch (BTS)?	101	70	
70.	Allow the burner thermal switch (BTS) to cool for 10 minutes.			71
71.	Can burner thermal switch (BTS) be reset?	73	72	
72.	Replace the burner thermal switch (BTS).			10
73.	Reset burner thermal switch (BTS) and turn power on. Jumper R and W thermostat terminals and observe furnace operation for (2) 20 minute cycles.			74
74.	Does the burner thermal switch (BTS) trip again?	76	75	
75.	Does a different status code flash?	5	11	
76.	Remove jumper from the R and W terminals and allow blower to operate for 5 minutes.			77
77.	Turn off power and reset Burner Thermal Switch (BTS)			78
78.	Connect 1 side of a slope manometer with a tee to the collector box pressure tap. Refer to pressure check connection illustration in APPENDIX B: Transducer Operational Check			79
79.	Check for proper transducer output. To do this, connect a DC voltmeter across terminals PL12-2 GREEN and PL12-3 BLACK (+).			80
80.	Run COMPONENT TEST by briefly shorting the TEST/TWIN terminal to the C terminal at the thermostat terminal strip.			81
81.	Referencing the Voltage/Pressure graph located in APPENDIX D, compare the pressure from the slope manometer to the output signal voltage from the transducer. EXAMPLE: The graph illustrates that at 1" of negative pressure, the transducer output should be approximately 1.5 VDC. At 3" of negative pressure, the transducer output should be approximately 3.5 VDC.			82
82.	Is the transducer VDC output within +/- 0.15 VDC of the expected value?	84	83	
83.	Replace the transducer			10
84.	You have inadequate combustion-air through the burner box This may be caused by: - Obstructed Air inlet elbow - Clogged burner box mesh - Leaking inducer housing gasket - Leaking inducer choke plate seal			85
85.	Turn off power and remove burner box			86
86.	Inspect the burner box air inlet elbow for blockage			87
87.	Inspect burner box mesh. Are there sign of deterioration or blockage?	88	92	
88.	Replace burner box assembly			10
89.	Inspect Burner box mounting gasket. Are there signs of damage or deterioration?	90	91	
90.	Replace burner box gasket			10
91.	Inspect and tighten (as needed) flame sense and igniter mounting screws			92
92.	Reinstall burner box. Tighten mounting screws to 45 in. lbs.			93

Manufacturer reserves the right to change, at any time, specifications and designs without notice and without obligations.

STEP	ACTION	YES	NO	GO TO
93.	Remove Inducer assembly			94
94.	Inspect inducer gasket and replace if damaged			95
95.	Inspect inducer wheel for debris and clean as needed			96
96.	Inspect Inducer choke plate to cell panel connection and reseal as needed			97
97.	Reinstall inducer assembly			98
98.	Turn power on and jumper the R and W thermostat terminals. Allow furnace to operate for 20 minutes or until status code starts flashing			99
99.	Does Burner thermal switch (BTS) trip again?	100	11	
100.	You have inadequate combustion-air supply. This may be caused by furnace installed in a negative pressure area.			10
101.	You have an open RED wire or bad terminal in limit circuit. Repair wire or replace harness.			10

Status Code 14 - Ignition Lockout

This status code indicates the furnace failed to ignite gas and/or prove flame in 4 attempts. The variable speed furnace control will auto-reset in 3 hours. Refer to status code 34.

STEP	ACTION	YES	NO	GO TO
1.	IGNITION LOCKOUT - This status code indicates the furnace failed to ignite gas and/or prove flame in 4 attempts. The furnace control will auto-reset in 3 hours. Refer to status code 34.			INDEX

Status Code 21 - Gas Heating Lockout

This status code indicates the main gas valve relay MGVR on the furnace control is stuck closed or there is a miswire/short to gas valve wiring. The furnace control will NOT auto-reset.

STEP	ACTION	YES	NO	GO TO
1.	Turn power off, remove inner blower door and disconnect the R thermostat lead from the furnace control board.			2
2.	Use a piece of tape to hold door switch closed and turn power back on			3
3.	Does status code 21 flash?	4	17	
4.	Turn power off and disconnect wiring to gas valve.			5
5.	Turn power on			6
6.	Does status code 21 flash?	7	10	
7.	There is a mis-wire or short in gas valve wiring.			8
8.	Fix problem			9
9.	Go to page number indicated in Index for CLEANUP AND START- UP INSTRUCTIONS.			INDEX
10.	Does a different status code flash?	20	11	
11.	Jumper R and W thermostat terminals.			12
12.	Does status code 34 flash?	13	17	
13.	Turn power off and reconnect wiring to gas valve.			14
14.	Turn power on.			15
15.	Does status code 21 flash?	16	17	
16.	Replace gas valve			8
17.	Does a different status code flash?	20	18	
18.	Turn power off and reconnect wiring to gas valve.			19
19.	Turn power on.			21
20.	Go to page number indicated in the Index for the section covering the status code.			INDEX
21.	Jumper R and W thermostat terminals.			22
22.	Cycle the furnace several times to check for intermittent operation.			23
23.	Does status code 21 ever flash?	24	25	
24.	Replace furnace control			8
25.	Go to page number indicated in Index for CLEANUP AND START-UP INSTRUCTIONS. If the problem persists on an intermittent basis, replace the furnace control. If the problem persists on an intermittent basis after replacing the furnace control, contact your distributor.			INDEX

Manufacturer reserves the right to change, at any time, specifications and designs without notice and without obligations.

Status Code 22 - Abnormal Flame-proving Signal

This status code indicates the flame signal was sensed while gas valve GV was de- energized. The inducer will run until the fault is cleared.

STEP	ACTION	YES	NO	GO TO
1.	Turn off gas to the furnace by shutting off the external manual shut-off valve.			2
2.	Does status code 22 stop flashing?	3	4	
3.	Replace the gas valve.			11
4.	Disconnect wire from the flame-proving sensor electrode FSE			5
5.	Does status code 22 stop flashing?	6	8	
6.	Remove and inspect burner box assembly and remove any carbon deposits near the flame sensor. Clean flame sensor with fine steel wool. Reinstall flame sensor and burner box assembly. Reconnect wire to flame sensor. Does status code 22 flash?	7	11	
7.	Replace flame sensor electrode FSE			11
8.	Inspect harness flame sensor wire from furnace control at PL1-1 to burner box assembly for knicks or cuts and repair as needed			9
9.	Does status code 22 flash?	10	11	
10.	Replace the furnace control.			11
11.	Go to page number indicated in Index for CLEANUP AND START- UP INSTRUCTIONS.			INDEX

Status Code 23 - Transducer Greater than 0.15”

Transducer senses negative pressure greater than 0.15-in. w.c. at startup

STEP	ACTION	YES	NO	GO TO
1.	Turn power off, remove blower access panel, and disconnect R thermostat lead from the furnace control board.			2
2.	Depress door switch. Use a piece of tape to hold switch closed. Turn power ON			3
3.	Jumper R and W thermostat terminals.			4
4.	Does status code 23 flash?	10	5	
5.	Does a different status code flash?	8	6	
6.	Cycle the furnace multiple times to check for intermittent operation			7
7.	Does the status code 23 ever flash?	10	9	
8.	Go to page number indicated in the Index for the section covering the status code.			INDEX
9.	Go to page number indicated in Index for CLEANUP AND START- UP INSTRUCTIONS.			INDEX
10.	Check the transducer output signal. To do this, connect a DC voltmeter across terminals PL12-2 GREEN (-) and PL12-3 BLACK (+).			11
11.	Do you measure more than 0.65VDC?	16	12	
12.	Unplug the transducer connection at PL3 on the furnace control			13
13.	Does the status code 23 continue to flash?	26	14	
14.	You have a short or miswire in the transducer wiring			15
15.	Fix problem			9
16.	Disconnect the jumper across the R and W thermostat terminal			17
17.	Remove the pressure hose from its connection at the transducer			18
18.	Do you still measure more than 0.65VDC?	19	20	
19.	Replace Transducer			15
20.	Reconnect the pressure hose to the pressure transducer			21
21.	Connect 1 side of a slope manometer with a tee to the collector box pressure tap. Refer to pressure check connection illustration in APPENDIX B: Transducer Operational Check			22
22.	Is measured pressure more negative than -0.15-in. w.c. while furnace inducer is not operating?	25	23	
23.	Check pressure tubing for debris and blockage.			24
24.	Reconnect the pressure hose to the pressure transducer and inducer housing port			6
25.	Flue draft is too high. Check for proper vent sizing and monitor for excessive winds at termination			15
26.	Replace the furnace control.			15

Manufacturer reserves the right to change, at any time, specifications and designs without notice and without obligations.

Status Code 24 - Secondary Voltage Fuse Open

Indicates fuse is open and/or there is a short in low-voltage wiring.

STEP	ACTION	YES	NO	GO TO
1.	Turn power off and remove the blower access panel.			2
2.	Is secondary voltage fuse blown? Check continuity to make sure.	5	3	
3.	Replace furnace control.			4
4.	Replace secondary voltage fuse, if necessary, then go to page number indicated in Index for CLEANUP AND START-UP INSTRUCTIONS.			INDEX
5.	Disconnect all thermostat leads from the furnace control board, including all wires connected to the HUM terminal			6
6.	Replace the fuse, turn power on and depress door switch. Use a piece of tape to hold switch closed.			7
7.	Does status code 24 flash?	8	20	
8.	Turn power off and disconnect the transducer PL3 connection on the furnace control.			9
9.	Replace the fuse, turn power on.			10
10.	Does status code 24 flash?	15	11	
11.	Turn power off and disconnect the transducer PL12 connection at the transducer.			12
12.	Do you have continuity between the red wire (PL12-1) or the black wire (PL12-3) and chassis ground?	14	13	
13.	Replace transducer			
14.	You have a short to ground in the red or black transducer wiring. Repair or replace harness			
15.	Turn off power and Reconnect transducer connection PL3 at furnace control			16
16.	Disconnect PL1 from furnace control.			17
17.	Do you have continuity between either RED wire (PL1-6 or PL1-8) connected to the limit circuit and chassis ground?	18	3	
18.	You have a short circuit in the limit switch circuit. This includes limit switch(es) LS, Draft safeguard switch (DSS), Burner Thermal switches (BTS), and Auxiliary limit switches (ALS)			19
19.	Fix problem.			4
20.	Jumper R and W thermostat terminals.			21
21.	Does status code 24 begin flashing immediately when W is energized?	3	22	
22.	Does status code 24 begin flashing when the gas valve GV is energized?	23	30	
23.	Disconnect jumper wire across R and W thermostat terminals and replace secondary voltage fuse.			24
24.	Disconnect BLUE wire to gas valve GV and jumper R and W thermostat terminals.			25
25.	Does status code 34 flash? If not, status code 24 should occur when BLUE wire is energized.	29	26	
26.	Turn power off and disconnect PL1 from furnace control.			27
27.	Do you have continuity between the BLUE wire and chassis ground?	28	3	
28.	The BLUE wire to gas valve GV is shorting to ground. Replace or repair it.			19
29.	Replace gas valve GV.			19
30.	Does status code 24 begin flashing when the HUM terminal is energized? NOTE: On the furnace control the HUM terminal is energized when the blower turns ON.	3	31	
31.	Continue to observe the furnace operation for 10 minutes.			32
32.	Does status code 24 flash after the blower comes on?	33	34	
33.	The insulation is loose and has shorted against the limit switch(es).			
34.	Check for loose or torn insulation because it can cause intermittent occurrences of status code 24.			35
35.	Disconnect jumper wire across R and W terminals and wait until inducer stops.			36
36.	Jumper R, G, and Y thermostat terminals.			37
37.	Does status code 24 begin flashing when G and Y are energized?	3	38	
38.	Reconnect all thermostat leads to the furnace control board. Do NOT reconnect the humidifier lead to the HUM terminal. Operate the furnace in heating and cooling modes from the thermostat			39
39.	Does status code 24 occur during heating cycle?	36	41	
40.	You have a defective thermostat or a short circuit in R, W/W1, or W2 wiring between thermostat, User Interface, furnace, and outdoor unit. If the furnace is twinned, also check the twinning kit relay TKR.			19
41.	Does status code 24 occur during cooling cycle?	42	43	
42.	You have a defective thermostat, short circuit in G, Y1, Y/Y2 or O wiring between thermostat and outdoor unit, or a short circuit in the outdoor unit contactor or reversing valve (heat pump only).			19
43.	Does problem usually occur in cooling mode?	44	45	
44.	Check outdoor unit contactor. Failure to pull in can cause excessive current draw on low-voltage circuit. This can be an intermittent problem.			19
45.	Reconnect humidifier and check for excessive current draw when the blower turns ON. If current draw is excessive check wiring to humidifier and humidifier valve solenoid			19

Manufacturer reserves the right to change, at any time, specifications and designs without notice and without obligations.

Status Code 25 - Setup Error

Indicates model plug PL4 is missing or incorrect.

STEP	ACTION	YES	NO	GO TO
1.	Turn power off, remove blower the blower access panel, and disconnect the R thermostat lead from the furnace control board.			2
2.	Turn power on and depress door switch. Use a piece of tape to hold switch closed.			3
3.	Does status code 25 flash only 4 times on power-up?	4	7	
4.	The model plug is missing or invalid, but the control will default to the model stored in memory. The furnace will operate properly as if the model plug was installed.			5
5.	Install correct model plug			6
6.	Go to page number indicated in Index for CLEANUP AND START- UP INSTRUCTIONS.			INDEX
7.	Is this a new service replacement control?	8	10	
8.	You need to remove the model plug PL4 from the old control and install it on the new replacement control. Once you install the model plug the power to the furnace needs to be cycled because the model plug is only read on power-up.			9
9.	If the model plug is not available from the old control, reference the model plug chart on the rating plate for the correct part number. If necessary, you can install two resistors into the PL4 connection on the control board. R1 goes across the middle 2 pins and R2 goes across the outer 2 pins. The resistors need to be within 10% of the required value. Check with an ohm meter before installing.			6
10.	Turn power off and remove model plug from PL4. Measure model plug resistance and compare with values noted on rating plate. Are values within 10% of expected?	11	12	
11.	Replace the furnace control.			6
12.	One of the model plugs resistors is bad. Replace the model plug			6

Status Code 26 - Wiring Harness

Indicates yellow jumper in main plug of harness is damaged or missing

STEP	ACTION	YES	NO	GO TO
1.	Turn power off, remove the blower access panel.			2
2.	Disconnect PL1 from furnace control.			3
3.	Do you have continuity on the yellow jumper wire between PL1-2 and PL1-4?	5	4	
4.	Repair or replace harness			6
5.	Replace furnace control			6
6.	Go to page number indicated in Index for CLEANUP AND START-UP INSTRUCTIONS.			INDEX

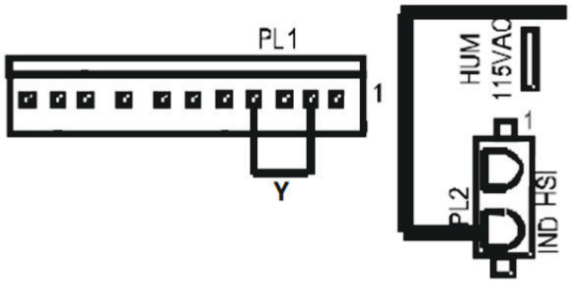

A230410

Fig. 1 – Wiring Harness

Status Code 31 - Transducer Does Not Sense Target Pressure

indicates that transducer does not sense the target pressure, pressure is out of range, or there was a sudden change of pressure greater than 0.15-in. w.c.

STEP	ACTION	YES	NO	GO TO
1.	Turn power off, remove blower access panel, and disconnect the R thermostat lead from the furnace control board.			2
2.	Turn power on and depress door switch. Use a piece of tape to hold switch closed.			3
3.	Jumper R to W thermostat terminals.			4
4.	Does status code 31 flash in 25 seconds?	10	5	
5.	Does status code 31 flash after 30 seconds?	36	6	
6.	Does a different status code flash?	7	33	
7.	Go to page number indicated in the Index for the section covering the status code.			INDEX
8.	Go to page number indicated in Index for CLEANUP AND START- UP INSTRUCTIONS.			INDEX
9.	Fix problem.			8
10.	Turn power off and disconnect jumper wire across R and W thermostat terminals.			11
11.	Connect 1 side of a slope manometer with a tee to the collector box pressure tap. Refer to pressure check connection illustration in APPENDIX B: Transducer Operational Check			12
12.	Jumper R to W thermostat terminals.			13
13.	Reference APPENDIX D: Transducer Target Pressure. Does negative pressure reach the specified pre-purge target pressure (IN.w.c.) within 25seconds?	14	25	
14.	Turn power off and disconnect jumper wire across R and W thermostat terminals.			15
15.	Check the transducer output signal. To do this, connect a DC voltmeter across terminals PL12-2 GREEN and PL12-3 BLACK (+).			16
16.	Turn power ON and run COMPONENT TEST by briefly shorting the TEST/TWIN terminal to the C terminal at the thermostat terminal strip.			17
17.	Referencing the Voltage/Pressure graph located in Appendix D, compare the pressure from the slope manometer to the output signal voltage from the transducer. EXAMPLE: The graph illustrates that at 1" of negative pressure, the transducer output should be approximately 1.5 VDC. At 3" of negative pressure, the transducer output should be approximately 3.5 VDC.			18
18.	Is the transducer VDC output within +/- 0.15 VDC of expected value?	19	24	
19.	Connect a DC voltmeter across terminals PL3-2 GREEN and PL3-3 BLACK (+).			20
20.	Run COMPONENT TEST by briefly shorting the TEST/TWIN terminal to the C terminal at the thermostat terminal strip.			21
21.	Do the Voltages match those measured in step 19?	22		
22.	Replace furnace control			9
23.	You have an open wire or bad terminal in either the Green or Black transducer harness from the furnace control to the transducer. Repair or replace harness			9
24.	Replace Transducer			9
25.	Is inducer motor rotating in direction indicated on cooling fan?	27	26	
26.	Replace inducer motor or inducer motor assembly.			9
27.	Turn power off.			28
28.	Remove Inducer assembly and inspect inducer wheel. Is inducer wheel damaged	29	30	30
29.	If possible, replace inducer wheel. Otherwise, replace inducer motor assembly. NOTE: If the inducer wheel shows signs of excessive deterioration find cause by checking venting, input rates, and temperature rise. If other parts are affected replace them.			9
30.	Is the inducer wheel properly mounted to the inducer motor shaft?	31	9	
31.	Is the Choke plate sealed properly to the furnace cell panel?	32	9	
32.	You have excessive restriction in vent pipe or excessive leakage before the pressure tap in the inducer housing. Check for the following: - Restriction in vent pipe/outlet elbow - Proper vent sizing for installation - Leakage in inducer housing gasket - Extreme Leakage/Defect in Heat exchanger NOTE: If leakage is due to excessive corrosion find the cause by checking venting, input rates, and temperature rise. If other parts are affected, replace them			9
33.	Continue to observe furnace operation for 20 minutes or until status code starts flashing.			34
34.	Does status code 31 flash?	36	35	
35.	Does a different status code flash?	7	8	
36.	Turn power off and disconnect jumper wire across R and W thermostat terminals.			37
37.	Connect 1 side of a slope manometer with a tee to the collector box pressure tap. Refer to pressure check connection illustration in APPENDIX B: Transducer Operational Check			38
38.	Check the transducer output signal. To do this, connect a DC voltmeter across terminals PL12-2 GREEN and PL12-3 BLACK (+).			39
39.	Turn power on and jumper R and W thermostat terminals.			40

Manufacturer reserves the right to change, at any time, specifications and designs without notice and without obligations.

STEP	ACTION	YES	NO	GO TO
40.	Observe the furnace operation for at least 20 minutes or until status code starts flashing, monitoring for any sudden changes in inducer speed, pressure or in voltage			41
41.	Did status code 31 flash?	43	42	
42.	Does a different status code flash?	7	8	
43.	Turn power off and disconnect jumper wire across R and W thermostat terminals.			47
44.	Was there a drop in transducer voltage to nearly 0 VDC before the code 31 started to flash	24	45	
45.	Was there a sudden drop in pressure before the code 31 started to flash?	46	47	
46.	Problem is most likely caused by excessive winds or improperly sized vent system			9
47.	Was there a sudden drop of inducer speed noticed before the code 31 started to flash	48	46	
48.	Inspect harness between inducer assembly and furnace control. If no defect is found, replace inducer assembly			9

Status Code 34 - Ignition-Proving Failure

Indicates the furnace failed to ignite gas and/or prove presence of flame. Furnace will attempt to light 3 additional times before locking out and indicating status code 14.

STEP	ACTION	YES	NO	GO TO
1.	Shut the power off, remove the blower access panel and disconnect the R thermostat lead from the furnace control			2
2.	Assure that all manual gas shut offs are open, and that the switch on the gas valve is in the ON position			3
3.	Turn the power on and depress the door switch. Use a piece of tape to hold it closed.			4
4.	Jumper the R and W thermostat terminals.			5
5.	Observe the operation of the furnace for 5 minutes.			6
6.	Does status code 34 flash?	14	7	
7.	Does a different status code flash?	12	8	
8.	Run furnace through (2) 10-minute heat cycles			9
9.	Does status code 34 flash?	14	10	
10.	Does a different status code flash?	12	13	
11.	Fix problem.			13
12.	Go to page number indicated in the Index for the section covering the status code.			INDEX
13.	Go to page number indicated in Index for CLEANUP AND START- UP INSTRUCTIONS.			INDEX
14.	Turn off the power and disconnect the jumper across the R and W thermostat terminals. Allow furnace to cool for 5 minutes			15
15.	Remove ring terminal with GREEN/YELLOW wire located at gas valve mounting bracket. Check for corrosion and clean or replace as needed.			16
16.	Turn power on and jumper R and W thermostat terminals.			17
17.	Does status code 34 flash?	18	8	
18.	Check hot surface igniter (HSI) continuity. To do this, unplug igniter connection PL14 and measure between PL14-1 and PL14-2 on plug half that leads to burner box. Typical igniter resistance should measure between 40 and 70 Ohms at room temperature			19
19.	Is measured resistance of Hot surface igniter (HSI) between 40 and 70 Ohms?	21	20	
20.	Replace hot surface igniter (HSI)			11
21.	Reattach the Hot surface igniter plug PL14 and turn the power ON.			22
22.	Check the hot surface igniter (HSI) output. To do this connect an AC voltmeter across terminals PL14-1 Black (+) and PL14-2 White (-). Run COMPONENT TEST by briefly shorting the TEST/TWIN terminal to the C terminal at the thermostat terminal strip. Status LED will flash last status code and then turn ON the inducer motor, followed by the hot surface igniter. Is 115VAC across PL14-1 and 14-2 during the 15 second igniter period?	26	23	
23.	Check the hot surface igniter (HSI) output. To do this connect an AC voltmeter across terminals PL2-1 Black (+) and NEUTRAL L2 White (-) on the furnace control. Run COMPONENT TEST by briefly shorting the TEST/TWIN terminal to the C terminal at the thermostat terminal strip. Status LED will flash last status code and then turn ON the inducer motor, followed by the hot surface igniter. Is 115VAC across PL2-1 and NEUTRAL L2 during the 15 second igniter period?	24	25	
24.	You have an open wire or bad terminal in either the Black or White igniter wires from the furnace control to the hot surface igniter (HSI). Repair or replace harness			11
25.	Replace furnace control			11
26.	Jumper the R and W thermostat terminals and monitor ac voltage across the BLUE and GREEN/YELLOW wires to the gas valve GV.			27
27.	Just before status code 34 begins flashing was 24VAC across the BLUE and GREEN/YELLOW wire to gas valve GV?	33	28	
28.	Turn off power and disconnect the jumper across the R and W thermostat terminals.			29
29.	Connect an AC voltmeter across terminals PL1-10 BLUE (+) and PL1-5 GREEN/YELLOW (-) on the furnace control			30
30.	Turn power on and jumper the R and W thermostat terminals and monitor ac voltage across the PL1-10 BLUE and PL1-5 GREEN/YELLOW wires to the gas valve GV.			31
31.	Just before status code 34 begins flashing was 24VAC across the BLUE and GREEN/YELLOW wires at the furnace control?	32	25	
32.	You have an open wire or bad terminal in either the BLUE or GREEN/YELLOW gas valve wires from the furnace control to the gas valve. Repair or replace harness			11

Manufacturer reserves the right to change, at any time, specifications and designs without notice and without obligations.

STEP	ACTION	YES	NO	GO TO
33.	Turn off power and disconnect the jumper across the R and W thermostat terminals.			34
34.	Connect a water column manometer or similar device to the gas valve outlet pressure port.			35
35.	Turn on power and jumper across the R and W thermostat terminals.			36
36.	Does the gas valve open and allow gas to flow?	38	37	
37.	Replace gas valve.			11
38.	Is the gas valve outlet pressure correct as specified in the Installation, Start Up, and Operating Instructions?	40	39	
39.	Adjust gas valve pressure per the Installation, Start Up, and Operating Instructions.			11
40.	Does the burner light and stay on longer than a few seconds?	41	43	
41.	Are there signs of combustion oscillation or pulsation?	42	8	
42.	Check for: Gas pressure fluctuation during heating cycle Proper vent sizing for installation Leakage in or around the heat exchanger leakage between inducer and inducer housing			13
43.	Turn off power and disconnect the jumper across the R and W thermostat terminals.			44
44.	Remove water column manometer or similar device from the gas valve outlet pressure port making sure to fully close port			45
45.	Connect 1 side of a slope manometer with a tee to the collector box pressure tap. Refer to pressure check connection illustration in APPENDIX C: Transducer Operational Check			46
46.	Check the transducer output signal. To do this, connect a DC voltmeter across terminals PL12-2 GREEN and PL12-3 BLACK (+).			47
47.	Turn power ON and run COMPONENT TEST by briefly shorting the TEST/TWIN terminal to the C terminal at the thermostat terminal strip.			48
48.	Referencing the Voltage/Pressure graph located in Appendix D, compare the pressure from the slope manometer to the output signal voltage from the transducer. EXAMPLE: The graph illustrates that at 1" of negative pressure, the transducer output should be approximately 1.5 VDC. At 3" of negative pressure, the transducer output should be approximately 3.5 VDC.			49
49.	Is the transducer VDC output within +/- 0.15 VDC of expected value?	51	50	
50.	Replace transducer			
51.	Turn off power and remove burner box			53
52.	Remove burner box assembly			53
53.	Inspect burner box mesh for			54
54.	Inspect the burner box air inlet elbow for blockage			55
55.	Inspect burner box mesh. Are there sign of deterioration or blockage?	56	57	
56.	Replace burner box assembly			11
57.	Inspect Burner box mounting gasket. Are there signs of damage or deterioration?	58	59	
58.	Replace burner box gasket			11
59.	Remove and clean flame sensor with fine steel wool			60
60.	Remove hot surface igniter and inspect gasket. Replace gasket if damaged			61
61.	Reinstall flame sense electrode and igniter/gasket assembly			62
62.	Reinstall burner box. Tighten mounting screws to 45 in. lbs.			63
63.	Connect a DC microamp meter in series with the flame sensor wire			64
64.	Turn power on and jumper R and W thermostat terminals.			65
65.	When gas valve opens, is the DC current below .5 microamps?	69	66	
66.	When gas valve opens, is the DC current between .5 and 1.0 microamps?	67	25	
67.	Check connections and retry.			68
68.	Inspect unit grounding			8
69.	Replace flame sense electrode.			8

Manufacturer reserves the right to change, at any time, specifications and designs without notice and without obligations.

Status Code 42 - Inducer Motor Fault

Indicates RPM pulses from inducer are not detected within 20 seconds after a heat request, that inducer RPM was lost for greater than 5 seconds during operation, or that inducer is operating outside of its valid speed range

STEP	ACTION	YES	NO	GO TO
1.	Shut the power off, remove the blower access panel and disconnect the R thermostat lead from the furnace control board			2
2.	Turn the power on and depress the door switch. Use a piece of tape to hold it closed.			3
3.	Jumper the R and W thermostat terminals.			4
4.	Observe the operation of the furnace for the next 10 minutes or until fault occurs.			5
5.	Does status code 42 flash?	9	6	
6.	Does a different status code flash?	7	8	
7.	Go to page number indicated in the Index for the section covering the status code.			INDEX
8.	Go to page number Indicated in Index for CLEANUP AND START-UP INSTRUCTIONS.			INDEX
9.	Does the inducer motor turn on?	27	10	
10.	Hook an AC voltmeter across PL2-2 and L2 on the furnace control. Is 115-VAC across PL2-2 and L2?	12	11	
11.	Replace the furnace control.			15
12.	Do you have 115-VAC across PL13-4 and PL13-5?	14	13	
13.	You have an open wire or bad terminal on either the BLACK or WHITE wire between the furnace control and the inducer motor. Repair or replace main wire harness.			15
14.	Are all pins and wire leads intact on connectors between the furnace control and the inducer motor?	16	15	
15.	Fix Problem			8
16.	Turn power off and disconnect jumper wire across R and W thermostat terminals			17
17.	Turn power ON			18
18.	Check the inducer PWM line. To do this connect a DC voltmeter across terminals PL13-1 GRAY (+) and PL13-2 YELLOW (-). Note: The terminals can be damaged if the voltmeter probe is jammed into the connector. Use caution when checking. Run COMPONENT TEST by briefly shorting the TEST/TWIN terminal to the C terminal at the thermostat terminal strip. Does the voltage across PL13-1 and PL13-2 change states as shown below? - State 1 - OFF (0 - 4.0 VDC) - State 2 - MED (6.0 - 9.0 VDC)	23	19	
19.	Turn Power OFF			20
20.	Do you have continuity between PL13-1 and PL1-11	21	22	
21.	Do you have continuity between PL13-2 and PL1-9	11	22	
22.	You have an open wire or bad terminal on either the BROWN or YELLOW wire between the furnace control and the inducer motor. Repair or replace the wire harness			15
23.	Does inducer wheel turn freely?	26	24	
24.	Does the inducer cooling fan rub against the inducer housing?	15	25	
25.	Does the inducer wheel rub against the inducer housing?	15	26	
26.	Replace the inducer assembly			15
27.	Does status code 42 flash within 20 seconds after a call for heat?	28	48	
28.	Turn power off and disconnect jumper wire across R and W thermostat terminals			29
29.	Unplug transducer harness at connection PL12			30
30.	Turn power on and Jumper the R and W thermostat terminals			31
31.	Does status code 42 flash within 20 seconds after a call for heat?	33	32	
32.	Does status code 31 flash	40	11	
33.	Turn power off and disconnect jumper wire across R and W thermostat terminals.			34
34.	Reconnect the transducer connection PL12			35
35.	Turn Power ON			36
36.	Check the RPM feedback line. To do this, connect a DC voltmeter across terminals PL13-1 Gray (+) and PL13-3 ORANGE (-). Run COMPONENT TEST by briefly shorting the TEST/TWIN terminal to the C terminal at the thermostat terminal strip. Does the voltage across PL13-1 and PL13-3 change states as shown below? - State 1 – OFF (15 – 16 VDC) - State 2 – MED (13 – 14.5 VDC) NOTE: Values listed are general guidelines and measured values may differ from those listed. Monitor for the voltage change between the OFF and ON operational states	37	26	
37.	Turn power OFF			38
38.	Do you have continuity between PL13-3 and PL1-7?	11	39	
39.	You have an open wire or bad terminal on the ORANGE wire between PL13 and PL1. Repair or replace harness			15
40.	Turn off power and reconnect the transducer connection at PL12			41
41.	Connect 1 side of a slope manometer with a tee to the collector box pressure tap. Refer to pressure check connection illustration in APPENDIX C: Transducer Operational Check			42
42.	Check for proper output of the transducer. To do this, connect a DC voltmeter across terminals PL12-2 GREEN and PL12-3 BLACK (+).			43
43.	Turn power ON and run COMPONENT TEST by briefly shorting the TEST/TWIN terminal to the C terminal at the thermostat terminal strip.			44

Manufacturer reserves the right to change, at any time, specifications and designs without notice and without obligations.

STEP	ACTION	YES	NO	GO TO
44.	Referencing the Voltage/Pressure graph located in APPENDIX D, compare the pressure from the slope manometer to the output signal voltage from the transducer. EXAMPLE: The graph illustrates that at 1" of negative pressure, the transducer output should be approximately 1.5 VDC. At 3" of negative pressure, the transducer output should be approximately 3.5 VDC.			45
45.	Is the transducer VDC output within +/- 0.15 VDC of expected value?	46	47	
46.	You have excessive restriction in combustion airflow. Inspect HX and inducer housing assembly for blockage			15
47.	Replace Transducer			15
48.	Turn power off and disconnect jumper wire across R and W thermostat terminals			49
49.	Make sure that all pins and wire leads are intact on connections between the furnace control and the inducer motor.			50
50.	Connect 1 side of a slope manometer with a tee to the collector box pressure tap. Refer to pressure check connection illustration in APPENDIX C: Transducer Operational Check			51
51.	Check for proper output of the transducer. To do this, connect a DC voltmeter across terminals PL12-2 GREEN and PL12-3 BLACK (+).			52
52.	Turn power ON and jumper the R and W thermostat terminals.			53
53.	Reference APPENDIX D: “Transducer Target Pressures”. Does the transducer feedback voltage (within +/- 0.15 VDC) and the HX pressure reach expected values?	26	54	
54.	Turn power off and disconnect jumper wire across R and W thermostat terminals.			55
55.	Inspect pressure hose between inducer housing and transducer for cracks or leaks			56
56.	Inspect pressure switch hoses and inducer housing port for obstruction			57
57.	Inspect inducer housing and reseal to cell panel as needed			58
58.	Inspect burner box mounting screw and tighten to 45 in-lbs. if needed.			59
59.	If code 42 persists on an intermittent basis, replace the inducer assembly			8

Status Code 45 - Control Circuitry Lockout

Indicates the furnace control detected one of the following:

1.	Flame Sense Circuitry Error
2.	Software Check Error
3.	Gas Valve Relay Stuck Open

Reset power to clear lockout, If status code reoccurs when power is reapplied, replace furnace control.

CLEAN UP AND STARTUP

WIRING HARNESS – indicated yellow jumper in main plug of harness is damaged or missing:

STEP	ACTION
1.	Start furnace using procedure outlined on Lighting Instructions attached to furnace. Observe operation of furnace through at least 1 complete heating cycle controlled from the room thermostat. Observe cycle for 20 minutes or until a status code is flashed. If status code flashes, refer to the Index
2.	Recycle as necessary and check thermostat heat anticipator setting, gas input rates, and temperature rises. These procedures are outlined in the Installation, Start-Up, and Operating Instructions manual.
3.	Check operation of safety devices: limit switch and burner thermal switch
4.	Put heat off delay setup jumper in its proper positions.
5.	Remove tape from the door switch.
6.	Replace thermostat leads (if necessary).
7.	Set thermostat in AUTO position, calling for heat.
8.	Set thermostat to desired temperature.
9.	Replace furnace door(s). Clean up

Manufacturer reserves the right to change, at any time, specifications and designs without notice and without obligations.

COMBUSTION TONE MITIGATION

STEP	ACTION	YES	NO	GO TO
1.	Remove outer furnace door. Record status of AMBER LED. See Service/Status Code Instructions.			2
2.	Is the AMBER LED status light blinking ON/OFF slowly with a combination of short and long flashes?	3	5	
3.	Determine status code. The status code is a 2-digit number with the first digit determined by the number of short flashes and the second digit by the number of long flashes			4
4.	Go to page number indicated in the Index for the section covering the status code.			INDEX
5.	Remove the blower access panel and disconnect the R thermostat lead from the furnace control			6
6.	Inspect burner box air inlet elbow for blockage			7
7.	Tighten burner box mounting screws (if loose) to 45 in-lbs.			8
8.	Check and tighten igniter and flame sense mounting screws as needed			9
9.	Check and tighten all inducer housing and inducer panel screws as needed			10
10.	Jumper R and W thermostat terminals and monitor for tone			11
11.	Does unit still exhibit tone during start up or operation?	13	12	
12.	Go to the page number indicated in Index for the CLEANUP AND START-UP INSTRUCTIONS.			INDEX
13.	Clock input rate. Do NOT use manifold pressure method. Is the gas valve adjusted to achieve the proper input rate?	16	14	
14.	Adjust gas valve to achieve proper furnace input rate per Installation, Start-Up, and Operating instructions. If it cannot be adjusted to proper rate, replace gas valve			15
15.	Does unit still exhibit tone during start up or operation?	16	12	
16.	Measure manifold pressure. Adjust manifold pressure up by 0.1-in. w.c. if set below 2.3-in. w.c., and down 0.1-in. w.c. if currently set at or above 2.3-in. w.c.			17
17.	Does unit still exhibit tone during start up or operation?	18	12	
18.	Remove R to W jumper and allow unit to cool			19
19.	Check for proper output of the transducer. To do this, connect a DC voltmeter across terminals PL12-2 GREEN and PL12-3 BLACK (+).			20
20.	Do you have more than 0.65VDC?	21	22	
21.	Replace Transducer			
22.	Connect 1 side of a slope manometer with a tee to the collector box pressure tap. Refer to pressure check connection illustration in APPENDIX C			24
23.	Jumper R and W thermostat terminals			24
24.	Referencing the Voltage/Pressure graph located in APPENDIX D, compare the pressure from the slope manometer to the output signal voltage from the transducer. EXAMPLE: The graph illustrates that at 1" of negative pressure, the transducer output should be approximately 1.5 VDC. At 3" of negative pressure, the transducer output should be approximately 3.5 VDC.			25
25.	Is the transducer output within +/- 0.15 VDC of expected?	26	21	
26.	Remove R to W jumper and allow unit to cool			27
27.	Remove inducer assembly from choke plate. Remove choke plate and reseal plate to cell panel. Allow 10 minutes to seal before re-installing inducer assembly.			28
28.	Inspect inducer gasket and replace if damaged			29
29.	Set thermostat to call for heat or jumper R and W thermostat terminals and monitor for tone			30
30.	Does unit still exhibit tone during start up or operation?	31	12	
31.	Remove burner box assembly and inspect burner for debris or damage. Replace as needed			32
32.	Inspect the burner insulation/gasket for damage or debris. Replace as needed			33
33.	Install burner box assembly			34
34.	Set thermostat to call for heat or jumper R and W thermostat terminals and monitor for tone			35
35.	Does unit still exhibit tone during start up or operation?	36	12	
36.	Contact Distributor Service Manager for unit replacement authorization			37
37.	Go to the page number indicated in Index for the CLEANUP AND START-UP INSTRUCTIONS.			INDEX

Manufacturer reserves the right to change, at any time, specifications and designs without notice and without obligations.

APPENDIX A - Furnace Control Board Layout

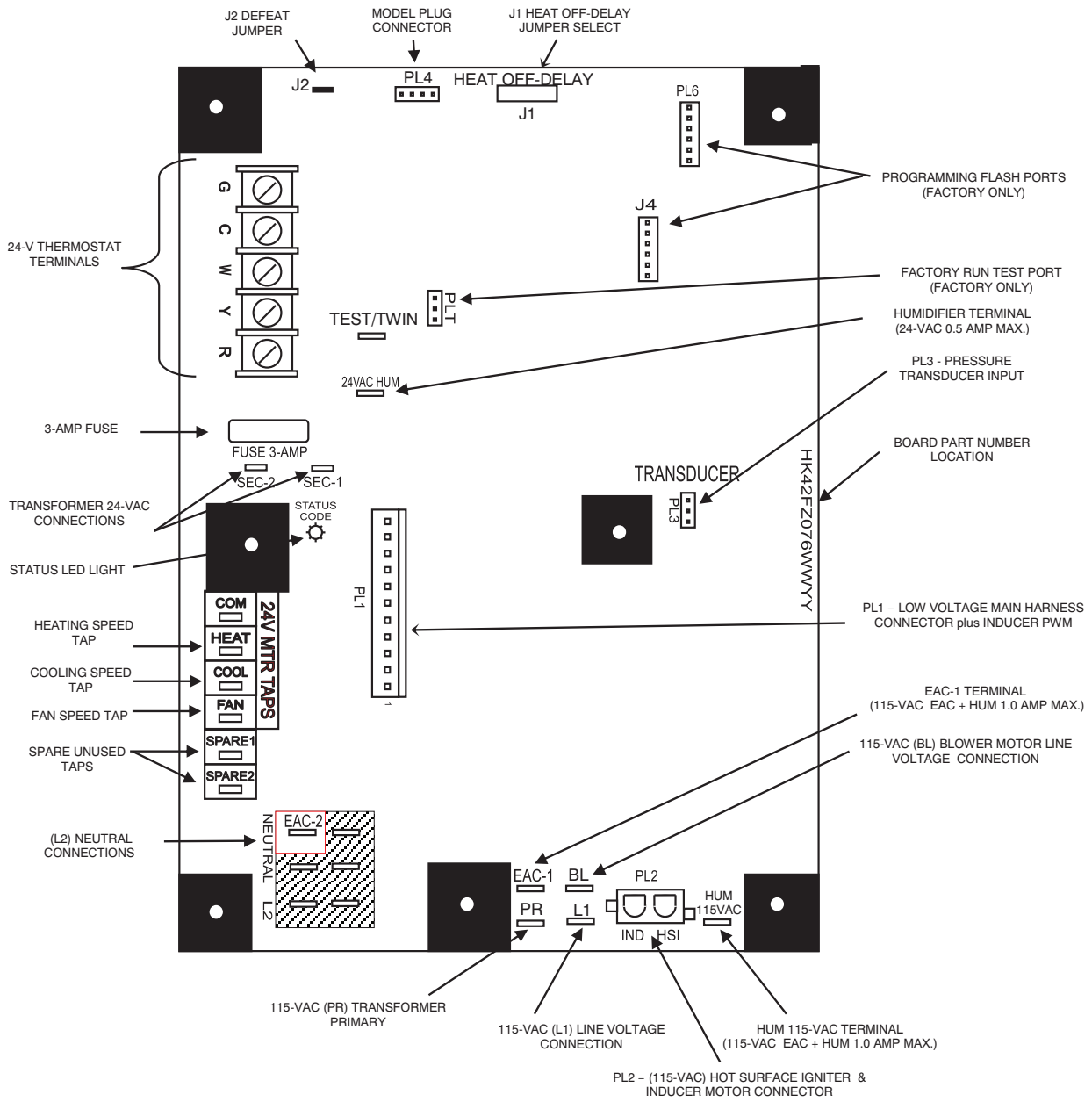

Fig. 2 – Furnace Control Board Layout

APPENDIX B - Wiring and Connection Diagram

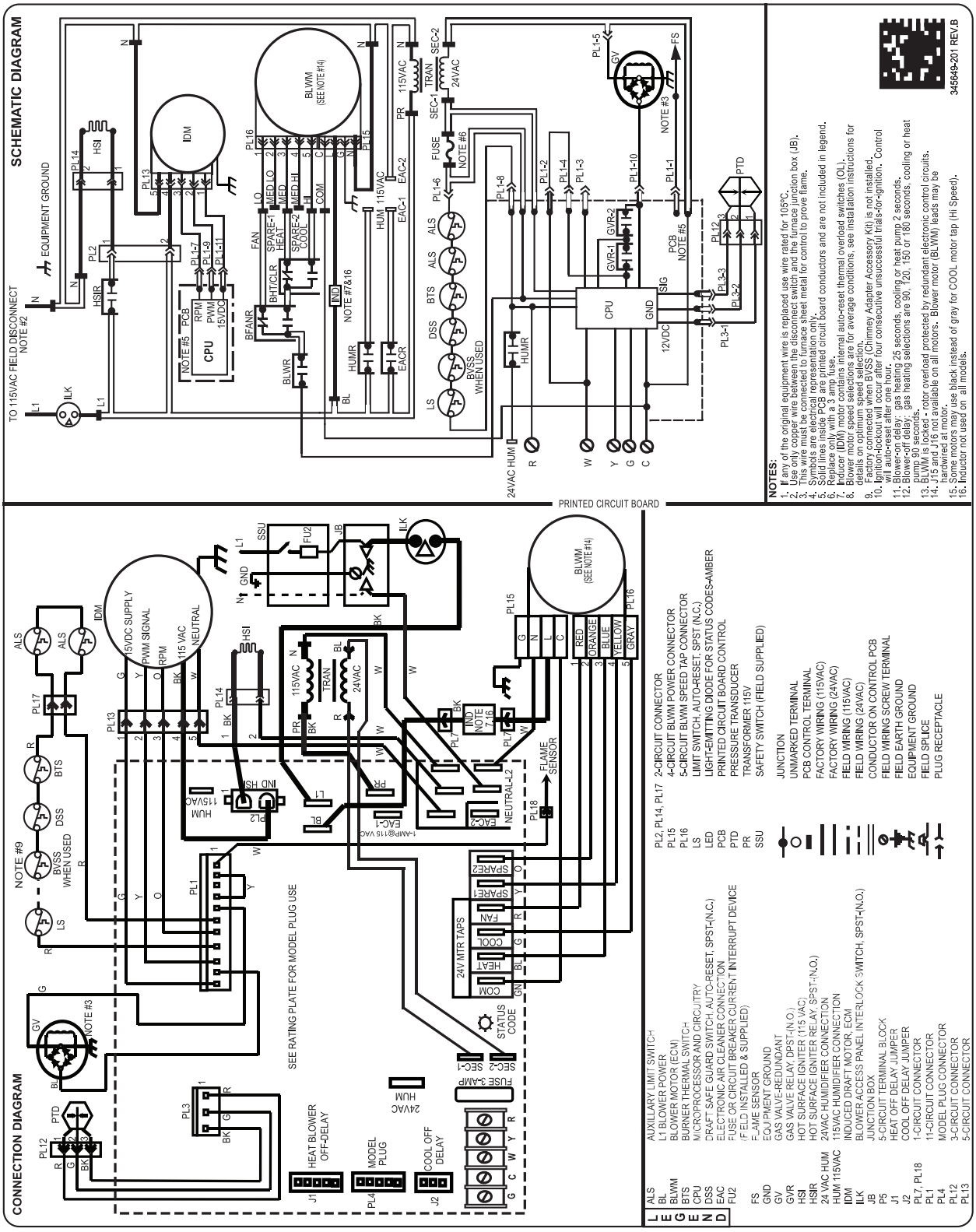

A190414

Fig. 3 – Wiring and Connection Diagram

APPENDIX C - Transducer Pressure Check

STEP	ACTION	YES	NO	GO TO
1.	Shut the power off, remove the blower access panel and disconnect the R thermostat lead from the furnace control board			2
2.	Turn the power on and depress the door switch. Use a piece of tape to hold it closed.			3
3.	Does a status code flash?	4	5	
4.	Go to page number indicated in the Index for the section covering the status code.			INDEX
5.	Check transducer supply voltage. To do this, connect a DC voltmeter across terminals PL12-2 GREEN (-) and PL12-1 RED (+).			6
6.	Do you have approximately 12 VDC across terminals PL12-2 GREEN (-) and PL12-1 RED(+)?	11	7	
7.	Connect a DC voltmeter across terminals and PL3-2 GREEN (-) and PL3-1 RED (+)			8
8.	Do you have approximately 12 VDC across terminals PL3-2 GREEN (-) and PL3-1 RED(+)?	9	10	
9.	You have an open wire on either the red or green transducer wiring. Repair or replace transducer wiring harness			16
10.	Replace Furnace control			16
11.	Check the transducer output signal. To do this, connect a DC voltmeter across terminals PL12-2 GREEN and PL12-3 BLACK (+).			12
12.	Do you have more than 0.65VDC?	13	17	
13.	Unplug the pressure hose from its connection at the transducer			14
14.	Do you measure more than 0.65VDC?	15	17	
15.	Replace the transducer			16
16.	Fix Problem			25
17.	Connect 1 side of a slope manometer with a tee to the collector box pressure tap. Refer to pressure check connection illustration in APPENDIX C			18
18.	Run COMPONENT TEST by briefly shorting the TEST/TWIN terminal to the C terminal at the thermostat terminal strip.			19
19.	Referencing the Voltage/Pressure graph located in APPENDIX D, compare the pressure from the slope manometer to the output signal voltage from the transducer. EXAMPLE: The graph illustrates that at 1" of negative pressure, the transducer output should be approximately 1.5 VDC. At 3" of negative pressure, the transducer output should be approximately 3.5 VDC.			20
20.	Is the transducer VDC output within +/- 0.15 VDC of expected value?	21	15	
21.	Jumper R and W thermostat terminals and allow furnace to operate for (2) 20 minute cycles.			22
22.	Remove jumper from R and W thermostat terminals			23
23.	Repeat the transducer check sequence starting at step 11 - 21.			24
24.	Is the transducer VDC output within +/- 0.15 VDC of expected values at pressure and while inducer is running for component self-test?	25	15	
25.	Go to page number Indicated in Index for CLEANUP AND START-UP INSTRUCTIONS.			INDEX

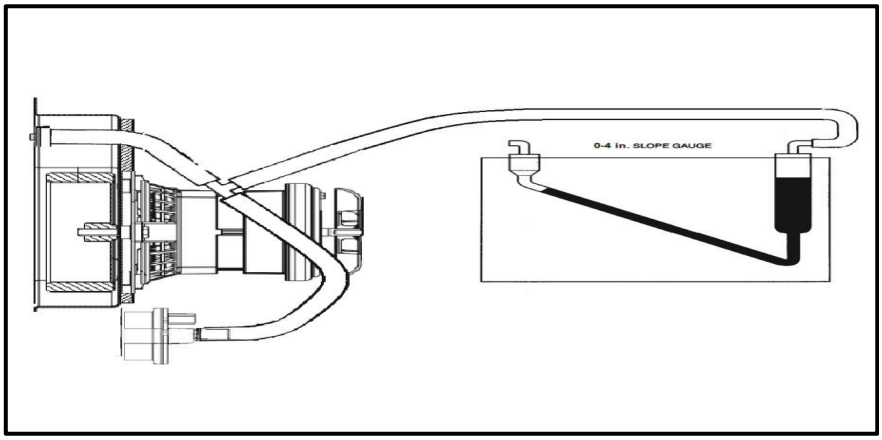

A230411

Fig. 4 – Pressure Check Connection

APPENDIX D - Transducer Target Pressures

Heating Call Sequence	UNIT SIZE (KBTU/h)			
Model Plug	**40**	**60**	**80**	**100**
	HK70EZ024	**HK70EZ026**	**HK70EZ028**	**HK70EZ029**
Startup (Heat call initiation)				
Inducer Pressure (in. w.c.) must be less than	0.15	0.15	0.15	0.15
Transducer feedback (VDC) must be less than	0.65	0.65	0.65	0.65
Pre-Purge and Ignition (15s+ igniter warmup)				
Inducer Pressure (in. w.c.)	0.60	0.65	1.10	0.80
Transducer feedback (VDC)	1.10	1.15	1.60	1.30
Flame Stabilization				
Inducer Pressure (in. w.c.)	0.70	1.00	1.30	1.10
Transducer feedback (VDC)	1.20	1.50	1.80	1.60
Time at this pressure (seconds)	2			10
Run Pressure				
Inducer Pressure (in. w.c.)	1.90	1.25	1.55	1.45
Transducer feedback (VDC)	2.40	1.75	2.05	1.95

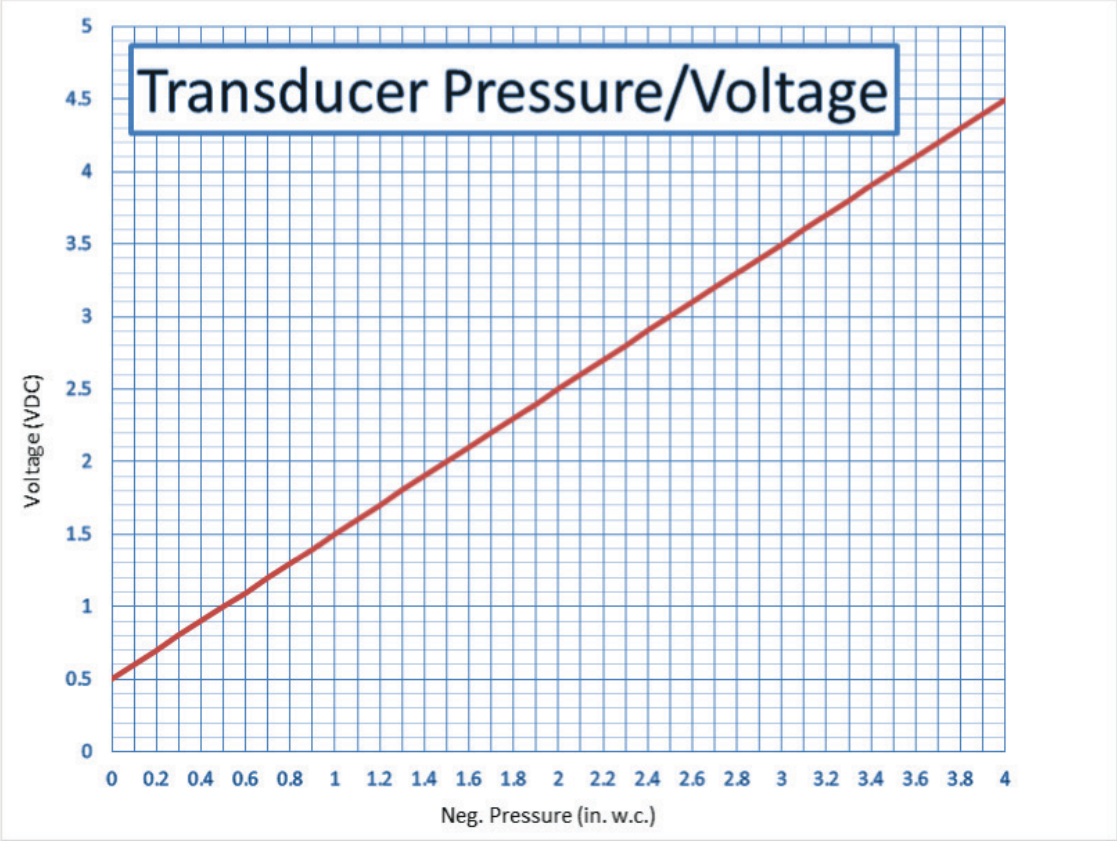

A230412

Fig. 5 – Transducer Pressure/Voltage

APPENDIX E - Static Pressure Reading Locations

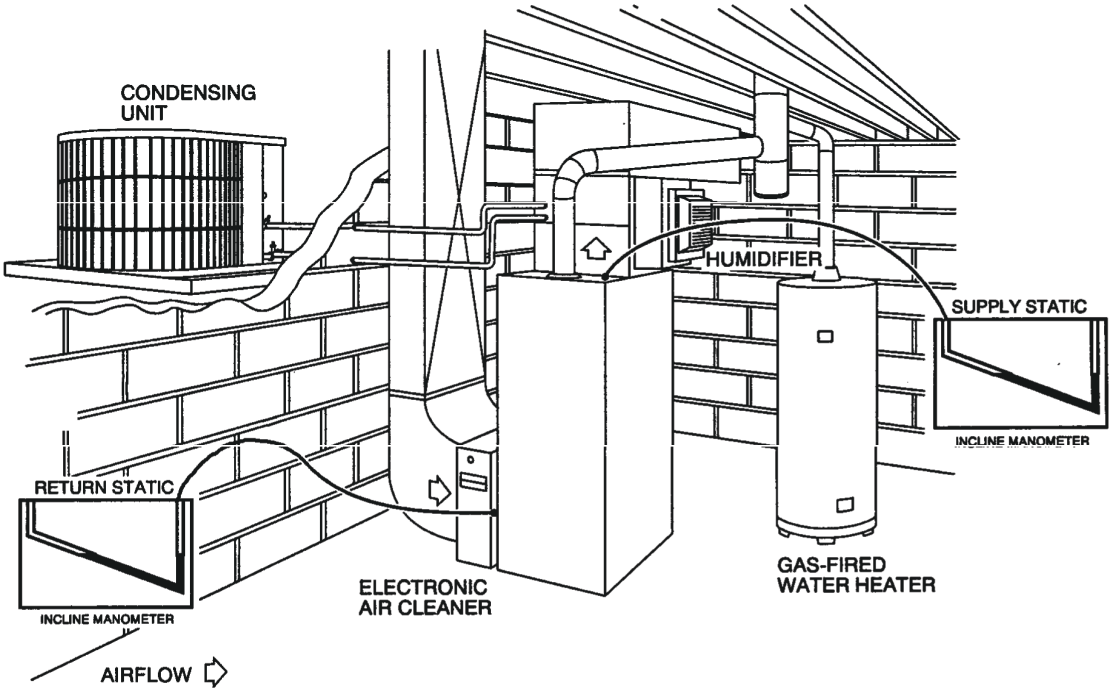

A122333

Fig. 6 – Upflow Total Static Pressure Reading Locations

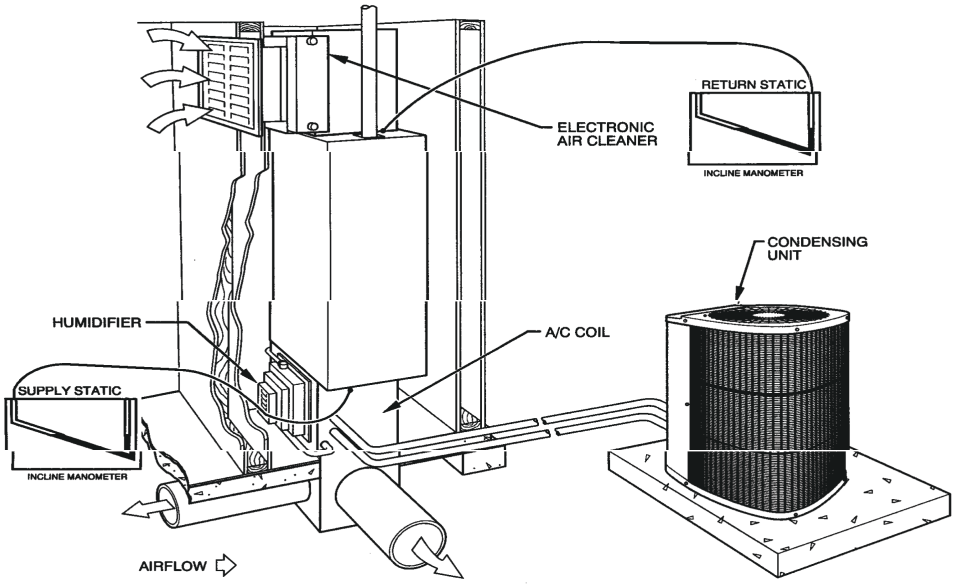

A122334

Fig. 7 – Downflow Total Static Pressure Reading Locations

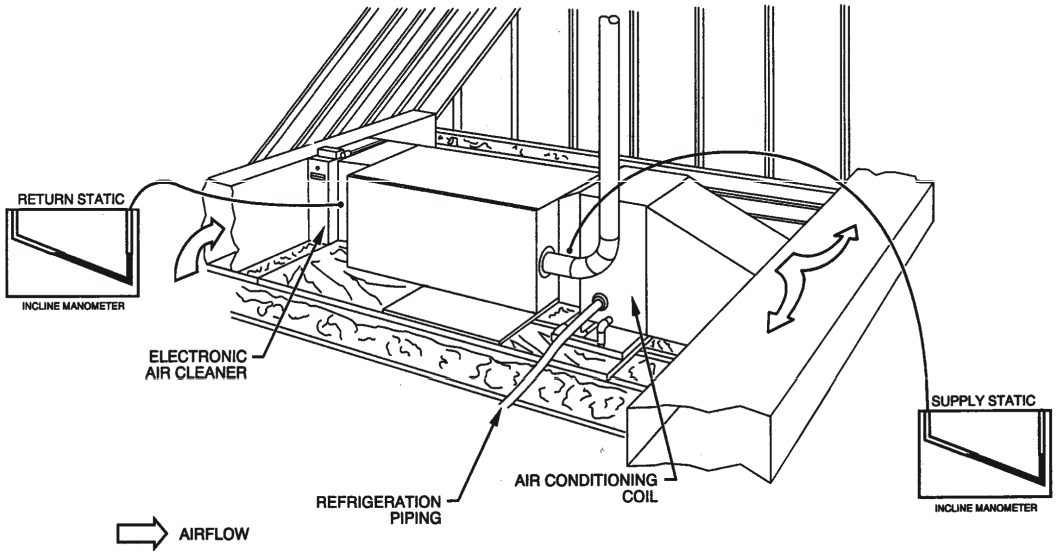

A122335

Fig. 8 – Horizontal Total Static Pressure Reading Locations

Tools Needed:

1. Pilot Tube
2. Incline Manometer/Magnahelic

Example 1:

Return ESP after Filter	0.20-in. w.c.
Supply ESP before Coil	0.40-in. w.c.
Total ESP	0.60-in. w.c.

Example 2:

Return ESP before Filter	0.10-in. w.c.
Filter Static Pressure Drop @ 2000 CFM	0.10-in. w.c.
Supply ESP after Coil	0.20-in. w.c.
Coil Static Pressure Drop Wet	0.20-in. w.c.
Total ESP	0.60-in. w.c.

Both *Examples 1 and 2* are correct. ***Example 1*** ESP readings were taken as laid out in static pressure reading location diagrams (Fig. 6, Fig. 7, Fig. 8). ***Example 2*** readings are taken as described. The coil and filter static pressure drops were taken from the manufacturer's product data sheets with the assumption that 2000 CFM is being delivered.

QUICK REFERENCE INFORMATION

Flame Sensor Microamperage

Microamp Range:	0.5 to 6.0 microamps
Typical Reading:	4 to 6 microamps

Hot Surface Igniter Reading

The Silicon Nitride igniter in this furnace is not voltage sensitive and will work within the voltage range of 102 to 132-VAC. Hence, there is no voltage regulation circuits on the furnace control board. A new Silicon Nitride igniter has a normal resistance range of 40 to 70 ohms at room temperature and is relatively stable over the life of the igniter. The igniter resistance will increase with temperatures above room temperature.

Ohm reading of HSI @ 70°F: 40 to 70 ohms (resistance will remain relatively stable over the life of the igniter).

SERVICE TRAINING

Packaged Service Training programs are an excellent way to increase your knowledge of the equipment discussed in this manual, including:

- Unit Familiarization
- Maintenance
- Installation Overview
- Operating Sequence

A large selection of product, theory, and skills programs is available, using popular video-based formats and materials. All include video and/or slides, plus companion book.

Classroom Service Training plus "hands-on" the products in our labs can mean increased confidence that really pays dividends in faster troubleshooting, fewer callbacks. Course descriptions and schedules are in our catalog.

CALL FOR FREE CATALOG 1-800-644-5544

[ ] Packaged Service Training

[ ] Classroom Service Training

© 2023 Carrier. All rights reserved.
Edition Date: 08/23

Catalog No: GFULN80-G-01TS

A Proud Member of the Carrier Family

Replaces: NEW

Manufacturer reserves the right to change, at any time, specifications and designs without notice and without obligations.