TSTATBBIEWF-01
Bryant Smart Thermostat
Featuring InteliSense™

Installation Instructions

Designed in the USA.

NOTE: Read the entire instruction manual before starting the instructions.

WARNING: Contains strong magnets; can be harmful to pacemaker wearers. Magnets are permanently installed; swallowing risk is removed.

Table of Contents

Safety Considerations 4
Introduction. 5
How to Connect in 3 Easy Steps. 6
Get to Know Your Bryant Smart Thermostat featuring InteliSense 8
Installation Considerations 9
Installation 11
Thermostat Setup with the Service Technician App. . . 17
Manual Setup of Thermostat HVAC Configuration on the Thermostat 19
System Start-Up and Checkout. 24
Operational Information 25
Troubleshooting 30
Equipment Configuration Outputs 32
Manual Configuration. 33
Wiring Diagrams. 37
C-Wire Diagrams for InteliSense 55
Compliance and Certification 55

Safety Considerations

Read and follow manufacturer instructions carefully. Follow all local electrical codes during installation. All wiring must conform to local and national electrical codes. Improper wiring or installation may damage thermostat.

Recognize safety information. This is the safety-alert symbol ⚠. When you see this symbol on the equipment and in instruction manual, be alert to the potential for personal injury.

Understand these signal words: **DANGER, WARNING**, and **CAUTION**. These words are used with the safety-alert symbol. DANGER identifies the most serious hazards which will result in severe personal injury or death. WARNING signifies a hazard which could result in personal injury or death. CAUTION is used to identify unsafe practices which may result in minor personal injury or product and property damage. NOTE is used to highlight suggestions which will result in enhanced installation, reliability, or operation.

⚠ WARNING

Contains strong magnets; can be harmful to pacemaker wearers. Magnets are permanently installed; swallowing risk is removed.

Introduction

The Bryant Smart Thermostat featuring InteliSense™ is a 24V Wi-Fi-enabled wall-mounted, low-voltage control. It includes an LED temperature display and 4 capacitive touch buttons to control temperature setpoints and heating/cooling/fan modes of operation from the thermostat.

Homeowners can remotely, via the Bryant SmartHome app, set temperature as well as set daily/weekly programmable schedules with 4 comfort profiles - home/sleep/wake/away. The Smart Thermostat featuring Bryant InteliSense offers a simplistic, smartphone-like feel and easy snap on/snap off removal from the backplate thanks to its patent-pending design.

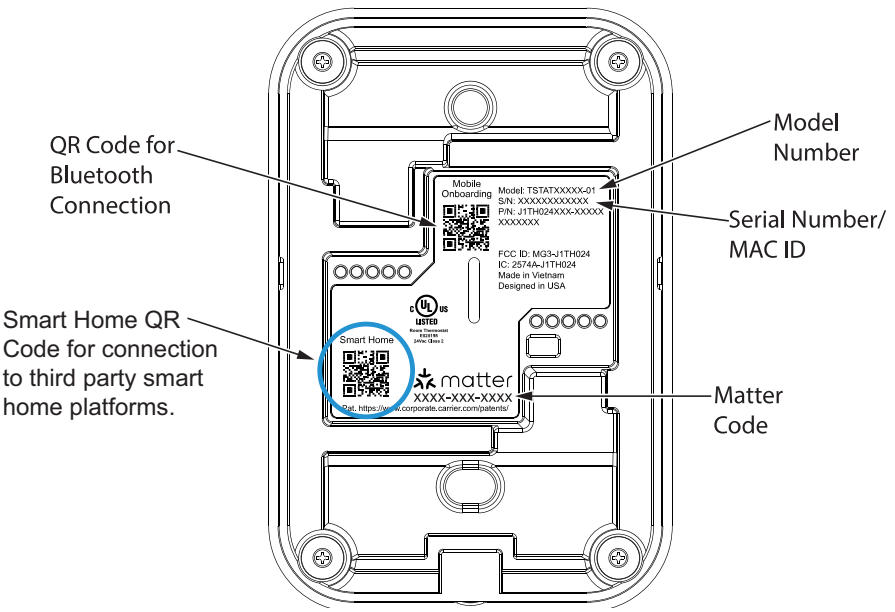

A250162 Rev. B

SMART HOME READY
Once Wi-Fi onboarding is complete via the SmartHome app, use your preferred home automation app to scan the Smart Home QR Code on the back of the thermostat housing and add the device. Or use your third party smart home platform to scan the Smart Home QR code.

How to Connect in 3 Easy Steps

Contractors

1. Download and open the Bryant Service Technician App from the App Store or Google Play.
2. Launch the App then select Connect to Equipment and then Smart Thermostat.
3. Follow the guided thermostat configuration instructions.*

Homeowners

1. Download the Bryant SmartHome App from the App Store or Google Play and create an account.
2. Launch the App then select Add New Device and then Smart Thermostat.
3. Follow the guided setup instructions to connect to your Wi-Fi network.*

** When instructed, utilize the mobile onboarding QR code found in one of three locations:*

- *On the front of this manual*
- *The hang tag attached to front of thermostat*
- *Back of the thermostat*

Get to Know Your Bryant Smart Thermostat featuring InteliSense

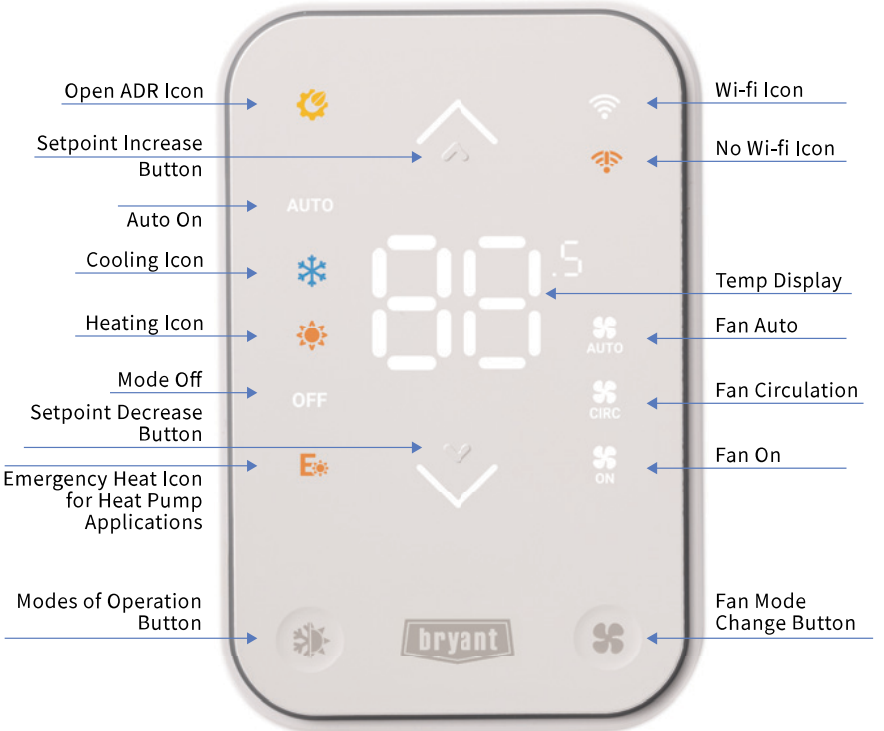

Installation Considerations

Power

This thermostat is powered by 24VAC only. It requires 24VAC (Rh and/or Rc and C terminals) of the low-voltage transformer to be connected to it for proper operation. It will not operate without these 2 connections.

Rh and Rc are connected via the shunt jumper (see Fig. 1). For applications using two 24VAC transformers, one in the indoor unit and one in the outdoor unit, remove the shunt jumper (Fig. 1). Connect the common from each to the C terminal. Connect R from the indoor unit to the Rh terminal. Connect R from the outdoor unit to the Rc terminal. The W signals are taken from the Rh power and the Y signal is taken from the Rc power. If thermostat has been installed in a two—transformer application that is later changed to a single—transformer installation, installer must install a field supplied jumper between Rc and Rh.

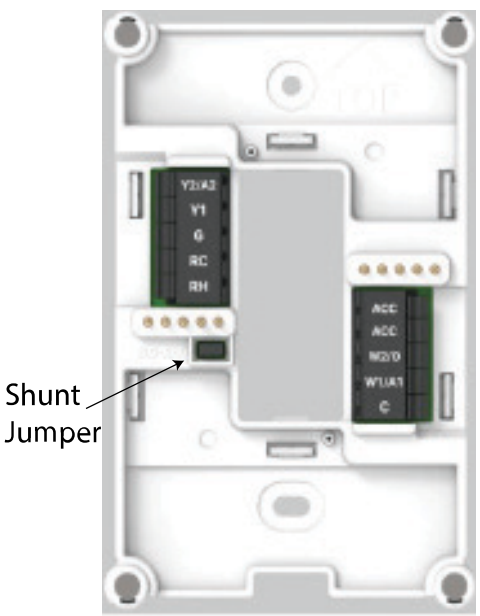

Fig. 1 – Shunt Jumper

Accessory Output and Connections

This thermostat is equipped with a dry contact output for the management of humidifiers, dehumidifiers and ventilation equipment. The 2 terminals are both labeled as ACC. The dry contact output must be configured for the management of either one of them.

Ventilation (ERV, HRV)

Function will be activated for the % on time configured, using a cycle rate of 1h. For example, if it is set to 50%, function will be active for the first 30 min and inactive for the next 30 min. If the difference in temperature is larger than the defined max indoor/outdoor temp delta, the function will never activate. If the outdoor temperature is not available, the thermostat will still follow the percent on time, disregarding the max delta parameter.

Humidifier

Control will be based on a setpoint (which will trigger the activation of the function) and a pre-defined hysteresis of 5% above the setpoint. If humidifier with active heat option is selected, the humidifier will only be activated when the heat is running, regardless of the humidifier setpoint.

Dehumidifier

Control will activate the dehumidifier output when the humidity reaches the setpoint and will de-activate the dehumidifier output when the humidity is 5% below the humidity setpoint. If dehumidifier with fan option is selected, the dehumidifier will be activated when the fan is running, and there is a demand for dehumidification, or during a call for cooling.

Installation

⚠ CAUTION

UNIT DAMAGE HAZARD

Failure to follow the recommended wiring practices could result in damage to the wall control and personal property. Improper wiring or installation may damage the thermostat. Check to make sure wiring is correct before proceeding with installation or turning on power.

Installation Notes:

- No part of the thermostat should be installed directly outdoors or in a cabinet outdoors.
- Never remove the thermostat board from the plastic housing. Doing so could warp and damage the components on the board.
- The mounting plate should be mounted to the wall before wires are attached.
- During thermostat installation, provide sufficient excess wiring behind the mounting plate. Coil the wiring, creating a service loop, and place in mounting box or behind the wall to remove strain against the terminal strip.
- For all wiring applications, use 18-22 AWG or larger single-stranded thermostat wire. Continuous wire lengths over 100 ft. (30.5 m) should use 20 AWG or larger. Wire lengths are not to exceed 250 ft. (76 m) per run.

Packaging contains the following components:

1. Thermostat
2. Anchors and screws
3. Warranty card
4. Installation instructions
5. Optional wall plate

Thermostat Location

Thermostat should be mounted:

- Approximately 5 ft (1.5m) from floor.
- Close to or in a frequently used room, preferably on an inside partitioning wall.
- On a section of wall without pipes or duct work.

Thermostat should NOT be mounted:

- Close to a window, on an outside wall, or next to a door leading to the outside.
- Exposed to direct light or heat from a lamp, sun, fireplace, or other temperature-radiating objects which could cause a false reading.
- Close to or in direct airflow from supply registers and return-air registers.
- In areas with poor air circulation, such as behind a door or in an alcove.

Install Thermostat

⚠ WARNING

ELECTRICAL OPERATION HAZARD

Failure to follow this warning could result in personal injury or death.

Before installing thermostat, turn off all power to equipment. There may be more than 1 power disconnect.

⚠ CAUTION

UNIT DAMAGE HAZARD

Failure to follow this caution may result in equipment damage or improper operation.

Improper wiring or installation may damage thermostat. Check to make sure wiring is correct before proceeding with installation or turning on power.

1. Turn off all power to equipment.
2. If an existing thermostat is being replaced:
   a. Remove existing thermostat from wall.
   b. Take photo of existing thermostat wiring before starting new thermostat installation.
   c. Disconnect wires from existing thermostat, one at a time.
      As each wire is disconnected, record wire color and terminal marking.
   d. New or additional wires may be needed to accommodate C wire.
   e. Discard or recycle old thermostat.

CAUTION

ENVIRONMENTAL HAZARD

Failure to follow this caution may result in environmental damage. Mercury is a hazardous waste. Federal regulations require that Mercury be disposed of properly.

3. Route wires through large hole in the wall mount. Level wall mount against wall (for aesthetic value only thermostat need not be leveled for proper operation) and mark wall through the two mounting holes (note: you might be able to reuse existing mounting locations).

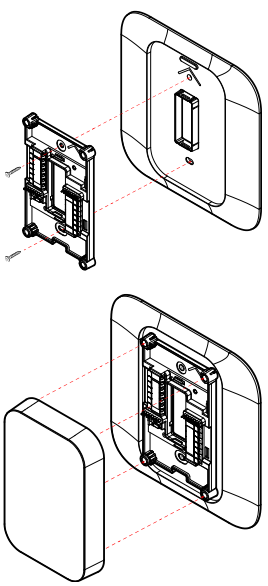

4. Drill two 3/16-in. mounting holes in wall at the screw hole openings in the wall mount. Thermostat may be mounted to a standard junction box, if desired. Screw hole openings on the wall mount will align with junction box mounting holes.
5. Secure plastic mounting base to wall with screws and anchors provided. Use 2 screws and 2 anchors

provided for a secure attachment. Make sure all wires extend through hole in the wall mount.

6. Adjust length and routing of each wire to reach proper connector block and terminal on wall mount with 1/4-in. (6 mm) extra wire.
7. Match and connect equipment wires to proper terminals of each connector block.
8. Push any excess wire into wall and against mounting base. Seal hole in wall to prevent air leaks. Leaks can affect operation and cause incorrect temperature and/or humidity measurement.

Incorrect Wiring

A260060 A260061

Correct Wiring

A260063

9. Reattach thermostat to the wall mount. Pogo pins on wall mount will align with hole openings on the back of the thermostat. The thermostat will be held to the wall mount by way of the four magnets on the wall mount, and the four screws on the back of the thermostat.
10. Remove plastic film from front of thermostat.
11. It will take approximately 7 seconds for the thermostat to light up after being powered on.

Thermostat Setup with the Service Technician App

For ease of Install, use the Service Technician App for full system setup, including HVAC configuration, advanced settings and thermostat testing.

1. To begin setup of your smart thermostat, open the Bryant Service Technician App on your phone. If you have an existing HVACPartners account, please login. If you do not have an existing account, you may continue as a guest to set up the smart thermostat.
2. On the landing screen of the Service Technician App, select the ‘Connect to Equipment’ button.
3. Select ‘Smart Thermostat’ from the list of capable equipment connections to begin the process.
4. Locate the QR code found on the front of your installation guide OR on the hang tag OR back of the thermostat, OR choose I can't find my QR code, to connect via Bluetooth and follow the guided setup instructions to connect to the thermostat and complete the setup process.
5. If InteliSense equipment is present, follow the instructions in the app for learning the equipment so the InteliSense data can be viewed in HVACPartners. If InteliSense equipment is not found and displayed on the Service Technician App during the Bluetooth

provisioning flow, press the "Relearn System" button. See figure below.

NOTE: If a "Relearn System" is required after the initial installation, an InteliSense relearn (Ir) will need to be performed.

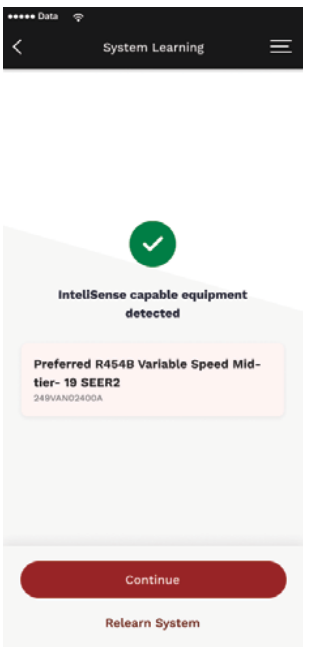

Servicing Dealer Declaration

In the final setup steps, you will have the opportunity to associate the smart thermostat with your dealership.

- Select 'Yes' to declare yourself as the servicing dealer.
- Select 'No' to leave this declaration up to homeowner.

After selecting YES, you will be asked if you want to provide contact information (email address and/or mobile phone number) for the homeowner. This will streamline the onboarding process for them through the homeowner app.

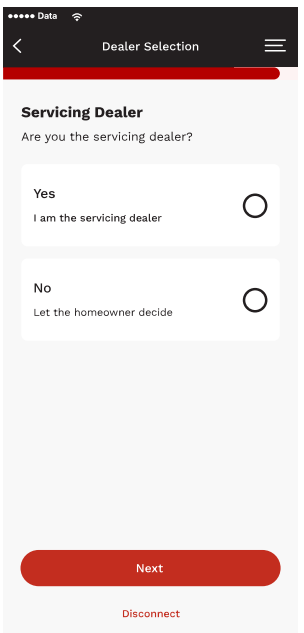

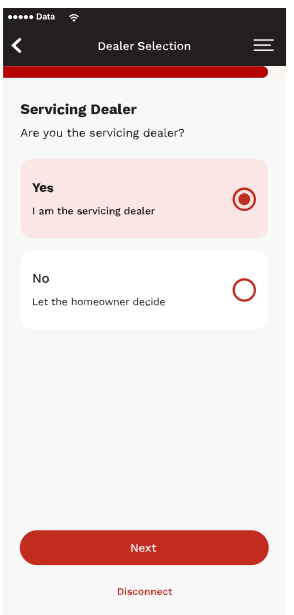

Manual Setup of Thermostat HVAC Configuration on the Thermostat

1. HVAC configuration can be done via thermostat display.
   a. Use the Mode button to go back.
   b. Use the Fan button to select.
   c. Use Up and Down buttons to cycle through options.
2. Upon first power up display will show F for selecting temperature format.

a. Use Up and Down buttons to change between F and C.

b. Press Fan button to select format.

3. After selecting temperature format display will show L1. At this point you may begin selecting a HVAC system type. Use Up and Down arrows to cycle through different HVAC system and sub-system types. Use Fan button to select your HVAC type and sub-system type. Use Mode button to go back.

a. Supported HVAC system types are as follows:

Standard (L1)

Standard supports the following sub-system types:

•0 Heat 1 Cool (01)

•0 Heat 2 Cool (02)

•1 Heat 0 Cool (10)

–If selected, you will be presented with additional choices to include Fan. Use Up and Down arrows to cycle through the two choices. Thermostat controls the fan is represented by F0. Furnace controls the fan is represented by F1. Use Fan button to select.

•2 Heat 0 Cool (20)

–If selected, you will be presented with additional choices to include Fan. Use Up and Down arrows to cycle through the two choices. Thermostat controls the fan is represented by F0. Furnace controls the fan is represented by F1. Use Fan button to select.

- 1 Heat 1 Cool (11)
  - If selected, you will be presented with additional choices to include Fan. Use Up and Down arrows to cycle through the two choices. Thermostat controls the fan is represented by F0. Furnace controls the fan is represented by F1. Use Fan button to select.
- 2 Heat 1 Cool (21)
  - If selected, you will be presented with additional choices to include Fan. Use Up and Down arrows to cycle through the two choices. Thermostat controls the fan is represented by F0. Furnace controls the fan is represented by F1. Use Fan button to select.
- 1 Heat 2 Cool (12)
  - If selected, you will be presented with additional choices to include Fan. Use Up and Down arrows to cycle through the two choices. Thermostat controls the fan is represented by F0. Furnace controls the fan is represented by F1. Use Fan button to select.
- 2 Heat 2 Cool (22)
  - If selected, you will be presented with additional choices to include Fan. Use Up and Down arrows to cycle through the two choices. Thermostat controls the fan is represented by F0. Furnace controls the fan is represented by F1. Use Fan button to select.

Heat Pump (L2).

Heat Pump supports the following sub-system types:

- 1 Stage (10)
  - –If selected, you will be presented with additional choices to select if the reversing valve is energized for cool (01) or heat (02). Use Up and Down arrows to cycle through the two choices.Use Fan button to select.
- 1 Stage with Aux (11)
  - –If selected, you will be presented with additional choices to select if the reversing valve is energized for cool (01) or heat (02). Use Up and Down arrows to cycle through the two choices.Use Fan button to select.
- 1 Stage with 2 Stage Aux (12)
  - –If selected, you will be presented with additional choices to select if the reversing valve is energized for cool (01) or heat (02). Use Up and Down arrows to cycle through the two choices.Use Fan button to select.
- 2 Stage (20)
  - –If selected, you will be presented with additional choices to select if the reversing valve is energized for cool (01) or heat (02). Use Up and Down arrows to cycle through the two choices.Use Fan button to select.
- 2 Stage with Aux (21)
  - –If selected, you will be presented with additional choices to select if the reversing valve is

energized for cool (01) or heat (02). Use Up and Down arrows to cycle through the two choices.Use Fan button to select.

Dual Fuel (L3).

Dual Fuel supports the following sub-system types:

- 1 Stage HP, 1 Heat (11)
  - –If selected, you will be presented with additional choices to select if the reversing valve is energized for cool (01) or heat (02). Use Up and Down arrows to cycle through the two choices.Use Fan button to select.
- 2 Stage HP, 1 Heat (21)
  - –If selected, you will be presented with additional choices to select if the reversing valve is energized for cool (01) or heat (02). Use Up and Down arrows to cycle through the two choices.Use Fan button to select.
- 1 Stage HP, 2 Heat (12)
  - –If selected, you will be presented with additional choices to select if the reversing valve is energized for cool (01) or heat (02). Use Up and Down arrows to cycle through the two choices.Use Fan button to select.

4. After the last parameter is selected, manual configuration will be done, and current temperature will be shown on the display. The thermostat will default to off, fan auto, and will be ready to use.

System Start-Up and Checkout

The thermostat is designed with a built-in installer test capability, Output Test Mode. This allows for easy operation of equipment without delays or setpoint adjustments to force heating or cooling. To use this feature you must first configure the thermostats HVAC type via Manual Setup of Thermostat HVAC Configuration on the thermostat or via the Service Technician app.

To enable and use installer Output Test Mode take the following steps: (To exit test mode without making a selection, choose S0.)

1. Hold the Mode key for 10 seconds. (Only works if system is configured.).
2. Once Output Test Mode is entered the thermostat will display S0.
3. When in the Output Test Mode:
   a. Use the Mode button to go back.
   b. Use the Fan button to select.
   c. Use Up and Down buttons to cycle through options.
4. Stages or Modes available for test are dependent on the HVAC configuration which has been setup. Only those applicable to the selected HVAC type will be shown. The supported test types are as follows:
   a. Test Heat Stage 1 (H1)
   b. Test Heat Stage 2 (H2)

c. Test Auxiliary Heat Stage 1 (A1)
d. Test Auxiliary Heat Stage 2 (A2)
e. Test Cool Stage 1 (C1)
f. Test Cool Stage 2 (C2)
g. Test Fan (F1)
h. Stop Testing (S0)

5. Use the Up and Down arrows to cycle through the available types and press Fan to select the type you want to test.
6. After selection, the test function will override temperature setpoint for 20 min to test heat, cool, auxiliary heat, or fan. Stages or modes not available for the selected configuration will not be shown. Test will end by selecting a new test, selecting stop testing or 20 min timeout. While testing, appropriate mode icon and perimeter lighting will blink until test is finished by any method.

Operational Information

User Interface

The display is a dead front display. All digits, icons, and perimeter lighting will be off unless the proximity sensor is activated, a key is pressed by the user, or unless a heating or cooling call occurs. The first key touch will be ignored if the display was off unless the thermostat had already been woken up by the proximity sensor. Once the display has been woken up the ambient temperature will be shown on the segmented display. The up and down temperature arrows, the applicable mode and fan icons, the Wi-Fi on or off icon and OpenADR (if active) will light up.

For a setpoint change:

When a user toggles the increase or decrease setpoint cap touch, the perimeter lighting will blink once per touch in the appropriate color. After 10 seconds, the perimeter lighting and the rest of LEDs will turn off unless a key is pressed.

Timers

Five-Minute Compressor Timeguard

This timer prevents compressor from starting unless it has been off for at least 5 minutes.

Cycle Timer

To prevent short cycling of the HVAC system, especially in the case where compressors are involved, the number of cycles per hour will be limited. This will be a settable parameter through the HVAC configuration in the App. Heating and cooling cycles will be set independently.

For heating the following minimum run time (MRT) and minimum off time (MOT) defaults will be applied based on the number of cycles per hour:

- Standard Gas – MRT = 7, MOT = 5 (5 Cycles per hour)
- Standard Elec – MRT = 5, MOT = 3 (7.5 Cycles per hour)
- Heat Pump – MRT = 15, MOT = 5 (3 Cycles per hour)
- Dual Fuel – MRT = 15, MOT = 5 (3 Cycles per hour)

For cooling, the following MRT and MOT defaults will be applied based on the number of cycles:

- AC/HP - MRT = 15, MOT = 5 (3 Cycles per hour)

Cycle rates can be increased or decreased in increments of 0.5 and will be inversely proportional to the MRT and MOT of reference of that system. For example, for a Standard Gas

system if cycle rates is increased to 6, MRT = 5.83, MOT = 4.17.

Heat/Cool Setpoints (Desired Temperature)

A minimum difference of 3°F and maximum of 15°F is enforced between heating and cooling desired temperatures.

InteliSense Service

When working remotely on the thermostat, please advise the homeowner before starting. The thermostat will display "Sr" while maintenance is being done through the Dealer Portal or Service Tech App.

A250163B

Equipment On Indicators

When cooling equipment is on the Cooling icon will illuminate when the display is active. The perimeter lighting will glow blue if cooling is active. This could occur in cooling or auto mode depending on setpoint.

When heating equipment is on the Heating icon will illuminate when the display is active. The perimeter lighting will glow orange if heating is active. This could occur in the heating or auto mode depending on the setpoint.

When emergency heating (AUX) equipment is on the Emergency Heating icon will illuminate when the display is active. The perimeter lighting will glow orange if heating is active. This could occur in the heating or auto mode depending on the setpoint.

When fan recirculation is active the fan recirculation icon will illuminate when the display is active. The perimeter lighting will glow green if fan recirculation mode is active and operation mode is inactive.

When OpenADR is active the OpenADR icon will illuminate when the display is active. The perimeter lighting will glow yellow if OpenADR is active.

NOTE: If a call is pending but the system is not ready to run due to minimum off time, the corresponding mode icon will blink until it is ready to run at which point it will stay solid on.

Fan Circulation Mode

Fan circulation mode will turn on the fan for 33% of the time using 1hour cycles, which includes the time that the fan is on due to an active heating or cooling call.

Schedule and Overrides

The schedule can be set up for each day of the week independently, with up to 5 different transitions per day using the mobile app.

There is no backup schedule within the physical thermostat.

Internet connection/service is required to reestablish the schedule. Local time is not stored in thermostat and therefore the schedule will not be followed upon a power on reset (POR) and will require reconnection to the internet for

proper timing. If internet connection is lost but there is no loss of power, thermostat will continue following the schedules even if there could be some drift in the time.

You can override schedule from the thermostat or homeowner app. Schedule will resume after 4 hrs if done through the thermostat unless a different time is set from the app. Overrides can be initiated both through the thermostat and app but duration can only be configured through the app with durations of 1-23 hours, or the option of the override duration to be until the next schedule transition, or a permanent override.

Alerts/Notifications

Only active alerts or notifications will be displayed.

On thermostat Alerts/Notifications:

–WiFi Disconnected - found on the thermostat top right corner.

–Energy Event – Open ADR icon lit on top left corner.

–Auxiliary Heat Running: E* icon lit on lower left corner.

In App Alerts/Notifications:

–Critical Alerts

–Maintenance Alerts

–System Setting Changes

–Utility Events

Troubleshooting

Display Does Not Light Up

If the display doesn't power up after power is applied, check the Rc/Rh and C terminals for 24VAC.

Connecting Thermostat to Apps

- Update the SmartHome App
- Update the Service Tech App

Reset

There are 3 different resets available for the thermostat.

- nr - Network reset
- Ir - InteliSense reset
- Fr - Factory reset

To perform a reset, follow these steps to ensure proper operation:

1. Press (Fan + mode) keys simultaneously for 10s. This will access the reset menu.
2. Use Arrow Up/Down to select the reset type
   a. nr - Network reset: Default Wi-Fi, BLE, and Matter only. Maintain HVAC settings.
   b. Ir - InteliSense reset: Eliminate any InteliSense or PLC related learning. After power cycle, it will automatically initiate the relearn process.
   c. Fr - Factory reset: Default all registry setting, InteliSense, Wi-Fi, BLE, and Matter related items.
3. If performing a Network (nr) or InteliSense (Ir) reset confirm the selection of the reset option with single press of fan button.

4. If performing a Factory reset (Fr) confirm the selection of Factory reset with a double press of fan button.

NOTE: Performing any reset option will result in power on reset of the device.

NOTE: FR reset returns the thermostat to the original factory condition. Erases all installation and WiFi information. Factory reset will restore all settings and operation to original out of the box settings. This includes WiFi, BLE, and HVAC System type setup. This is recommended when any issues persist after trying other troubleshooting matters.

NOTE: Network reset will restore default WiFi and BLE. HVAC settings, including HVAC system type are not changed. This is recommended when having issues connecting via Bluetooth, or when having trouble with WiFi.

NOTE: If configuration changes are needed to be made to the Smart Thermostat after the homeowner connects to WiFi, changes can be made through the Connected Portal.

Equipment Configuration Outputs

HVAC System / Label Names	Rc	Rh	C	W1/A1	W2/O	G	Y1	Y2/A2
Standard 1C	Rc	Rh	C			G	Y1	
Standard 2C	Rc	Rh	C			G	Y1	Y2
Standard 1H	Rc	Rh	C	W1		G		
Standard 2H	Rc	Rh	C	W1	W2	G		
Standard 1H 1C	Rc	Rh	C	W1		G	Y1	
Standard 2H 1C	Rc	Rh	C	W1	W2	G	Y1	
Standard 1H 2C	Rc	Rh	C	W1		G	Y1	Y2
Standard 2H 2C	Rc	Rh	C	W1	W2	G	Y1	Y2
Heat Pump 1 Stage	Rc	Rh	C		O	G	Y1	
Heat Pump 1 Stage w/Aux	Rc	Rh	C	A1	O	G	Y1	
Heat Pump 1 Stage w/2 Aux	Rc	Rh	C	A1	O	G	Y1	Y2
Heat Pump 2 Stage	Rc	Rh	C		O	G	Y1	Y2
Heat Pump 2 Stage w/Aux	Rc	Rh	C	A1	O	G	Y1	A2
DF 1 Stage HP, 1H	Rc	Rh	C	A1	O	G	Y1	
DF 2 Stage HP, 1H	Rc	Rh	C	A1	O	G	Y1	Y2
DF 1 Stage HP, 2H	Rc	Rh	C	A1	O	G	Y1	A2

Manual Configuration

HVAC System	System Shorthand	Step 1 Fahrenheit/ Celsius	Step 2 System Type	Step 3 Stages	Step 4 Fan Choice or Reversing Valve	Step 4 Options
Standard						
Standard 1C	0H/1C	F / C	L1	01		N/A
Standard 2C	0H/2C	F / C	L1	02		N/A
Standard 1H	1H/0C	F / C	L1	10	F0 / F1	Thermostat controls the fan is represented by F0. Furnace controls the fan is represented by F1. Use Fan button to select.
Standard 2H	2H/0C	F / C	L1	20	F0 / F1	Same as above
Standard 1H 1C	1H/1C	F / C	L1	11	F0 / F1	Same as above
Standard 2H 1C	2H/1C	F / C	L1	21	F0 / F1	Same as above
Standard 1H 2C	1H/2C	F / C	L1	12	F0 / F1	Same as above
Standard 2H 2C	2H/2C	F / C	L1	22	F0 / F1	Same as above

Manual Configuration (Continued)

HVAC System	System Shorthand	Step 1 Fahrenheit/ Celsius	Step 2 System Type	Step 3 Stages	Step 4 Fan Choice or Reversing Valve	Step 4 Options
Heat Pump						
Heat Pump 1 Stage	1H/1C with HP	F / C	L2	10	01 / 02	01= Reversing valve energized for cool 02 = Reversing valve energized for heat
Heat Pump 1 Stage w/Aux	2H/1C with HP	F / C	L2	11	01 / 02	Same as above
Heat Pump 1 Stage w/ 2 Stage Aux	3H/1C with HP	F / C	L2	12	01 / 02	Same as above
Heat Pump 2 Stage	2H/2C with HP	F / C	L2	20	01 / 02	Same as above
Heat Pump 2 Stage w/Aux	3H/2C with HP	F / C	L2	21	01 / 02	Same as above

Manual Configuration (Continued)

HVAC System	System Shorthand	Step 1 Fahrenheit/ Celsius	Step 2 System Type	Step 3 Stages	Step 4 Fan Choice or Reversing Valve	Step 4 Options
Dual Fuel						
DF 1 Stage HP, 1H	Dual Fuel, 2H/1C with HP	F / C	L3	11	01 / 02	01= Reversing valve energized for cool 02 = Reversing valve energized for heat
DF 2 Stage HP, 1H	Dual Fuel, 3H/2C with HP	F / C	L3	21	01 / 02	Same as above
DF 1 Stage HP, 2H	Dual Fuel, 3H/1C with HP	F / C	L3	12	01 / 02	Same as above

HVAC Terminals (10)

a. Rc – 24VAC Power (Cooling for two-transformer system)
b. Rh – 24VAC Power (Heating for two-transformer system)
c. C – 24VAC Common
d. W1/A1 – Heat Stage 1/Auxiliary Heat Stage 1
e. W2/O – Heat Stage 2/HP Reverse valve
f. G – Fan
g. Y1 – Cooling Stage 1/HP Stage 1
h. Y2/A2 – Cooling Stage 2/HP Stage 2/Auxiliary Heat Stage 2
i. ACC – Accessory, 1 of the below:
   - Dehumidifier
   - Humidifier
   - Ventilation (ERV, HRV)

Wiring Diagrams

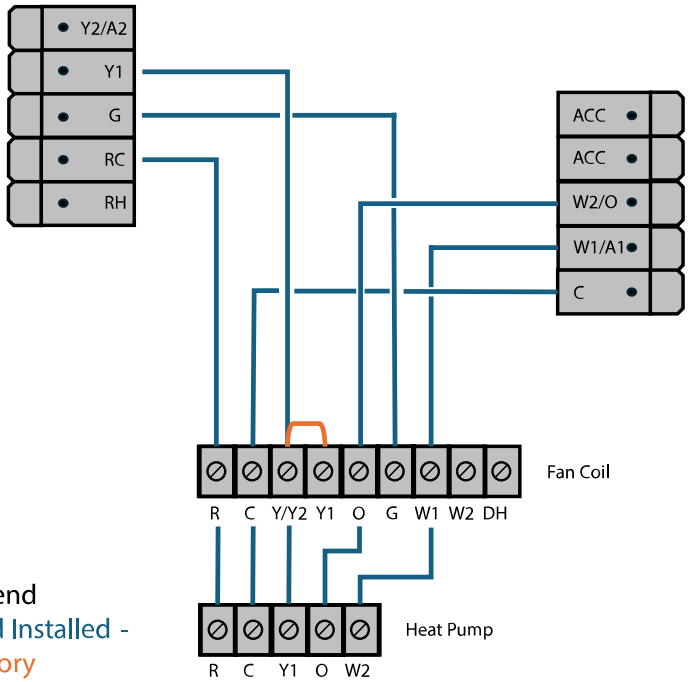

Legend
Field Installed -
Factory Installed -

1 Stage InteliSense Fan Coil + 1 Stage InteliSense Heat Pump
System type and sub -type for manual installation: L2, 11

A250183A

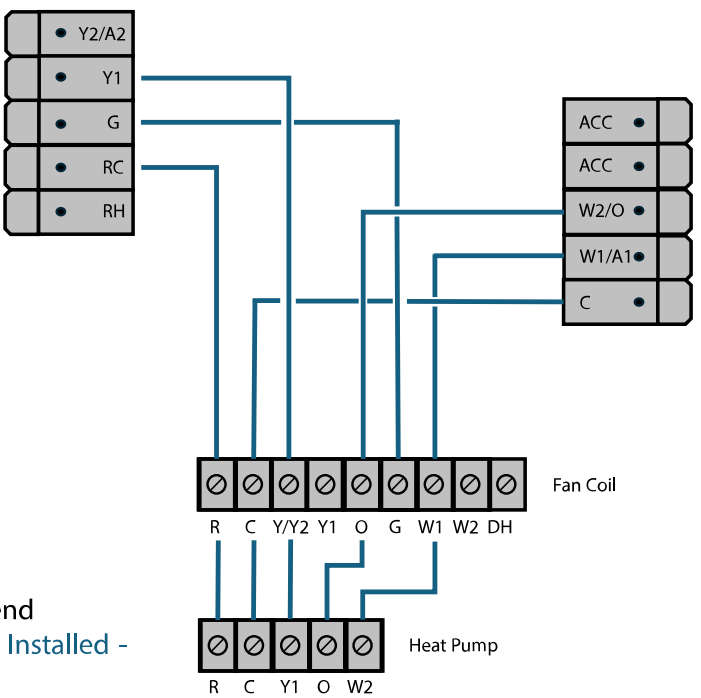

Legend
Field Installed -

1 Stage Non-InteliSense Fan Coil + 1 Stage InteliSense Heat Pump
System type and sub -type for manual installation: L2, 11

A250184A

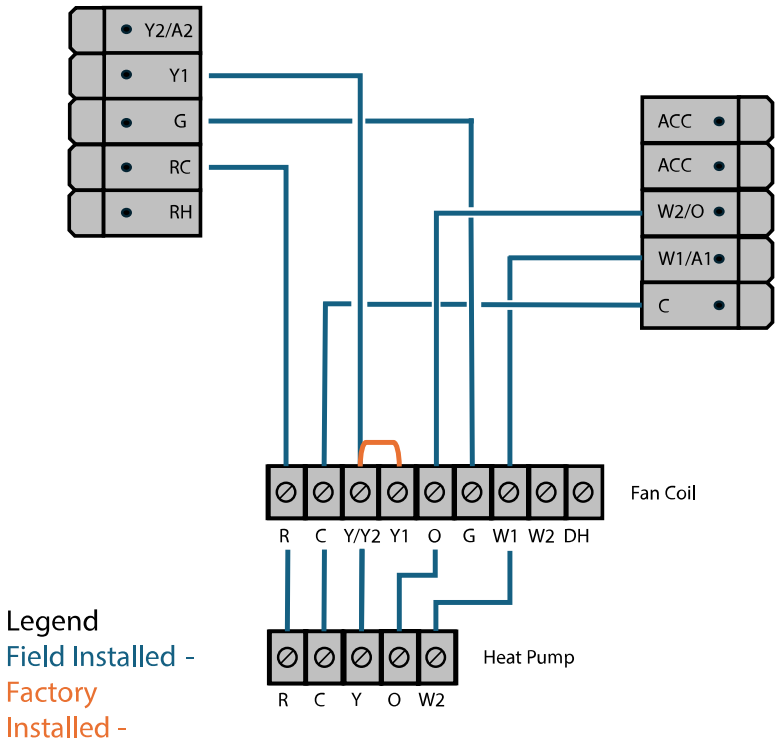

1 Stage InteliSense Fan Coil + 1 Stage Non -InteliSense Heat Pump
System type and sub -type for manual installation: L2, 11

A250185A

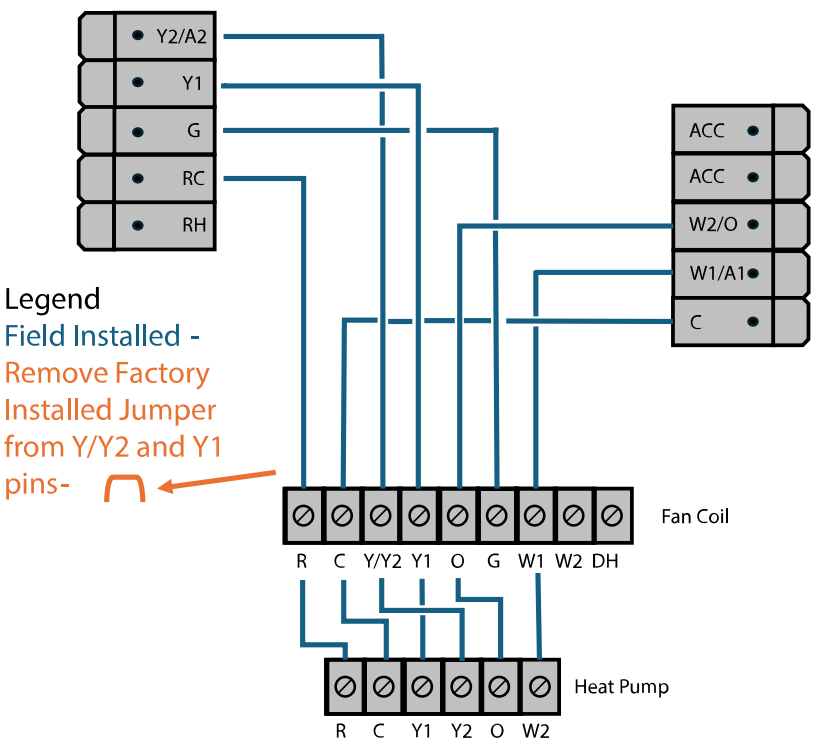

1 Stage InteliSense Fan Coil + 2 Stage InteliSense Heat Pump
System type and sub -type for manual installation: L2, 21

A250186A

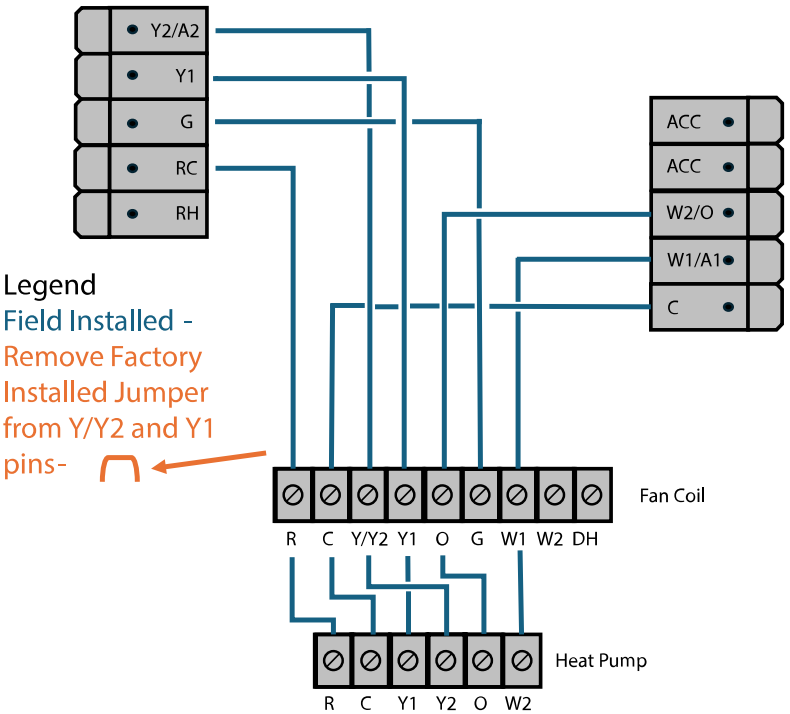

1 Stage InteliSense Fan Coil + 2 Stage Non -InteliSense Heat Pump
System type and sub -type for manual installation: L2, 21

A250187A

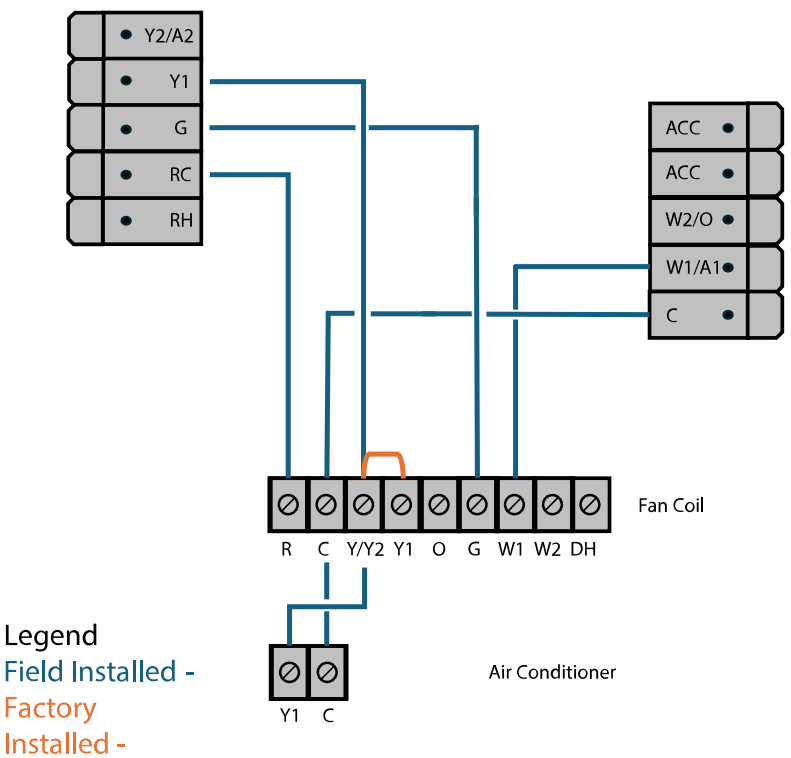

1 Stage InteliSense Fan Coil + 1 Stage InteliSense Air Conditioner
System type and sub -type for manual installation: L1, 11

A250188A

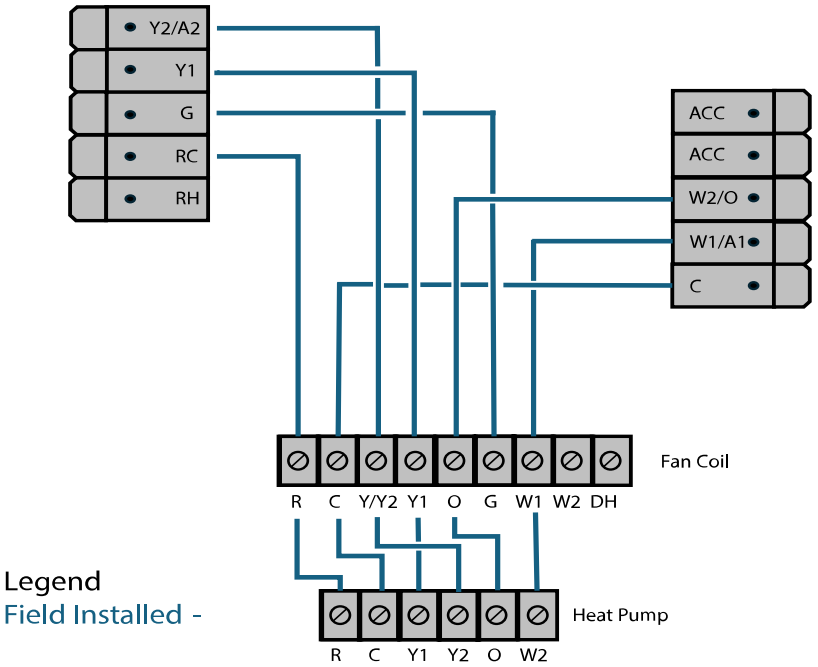

Legend
Field Installed -

1 Stage Non-InteliSense Fan Coil + 2 Stage InteliSense Heat Pump
System type and sub -type for manual installation: L2, 21

A250189A

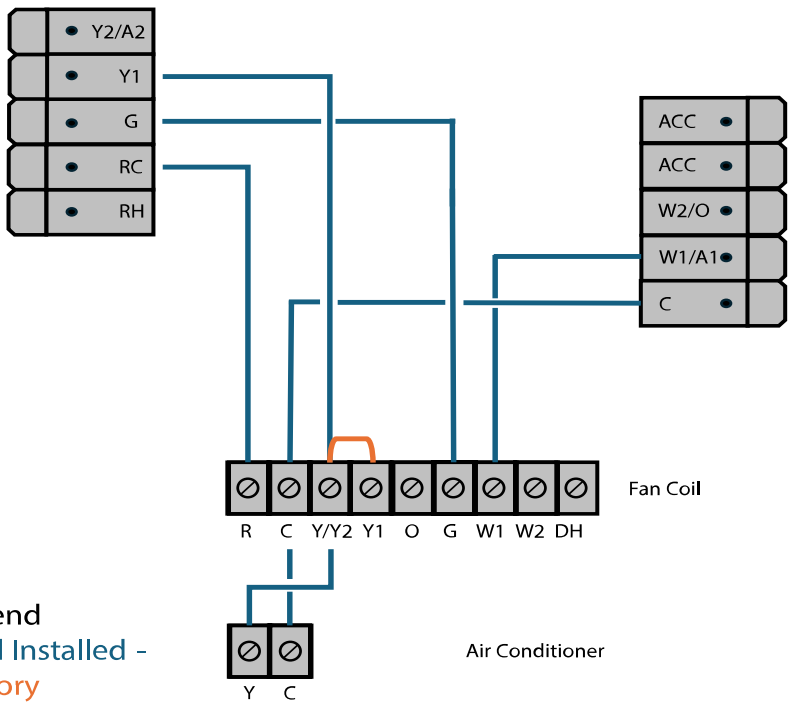

Legend
Field Installed -
Factory Installed -

1 Stage InteliSense Fan Coil + 1 Stage Non -InteliSense Air Conditioner
System type and sub -type for manual installation: L1, 11

A250190A

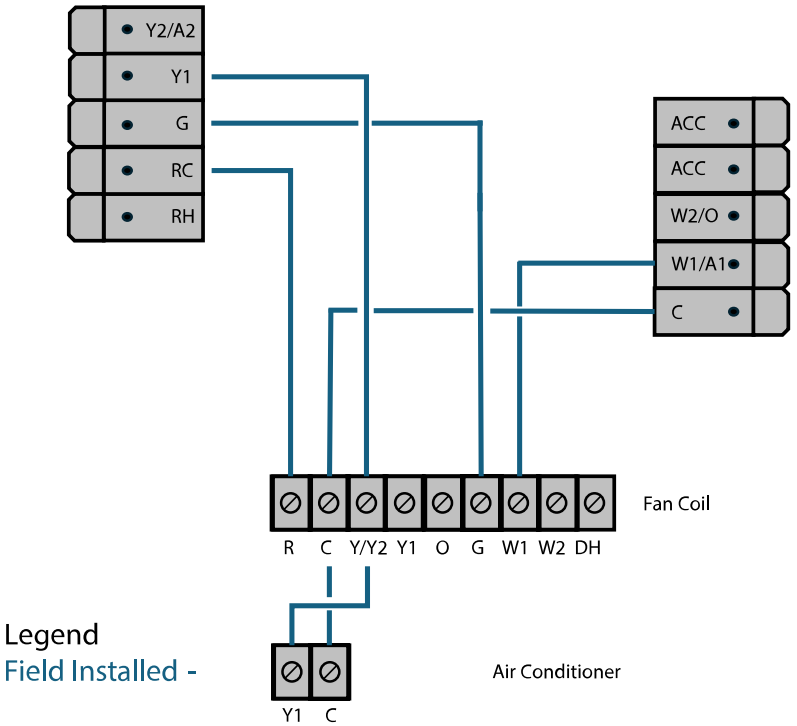

1 Stage Non-InteliSense Fan Coil + 1 Stage InteliSense Air Conditioner
System type and sub -type for manual installation: L1, 11

A250191A

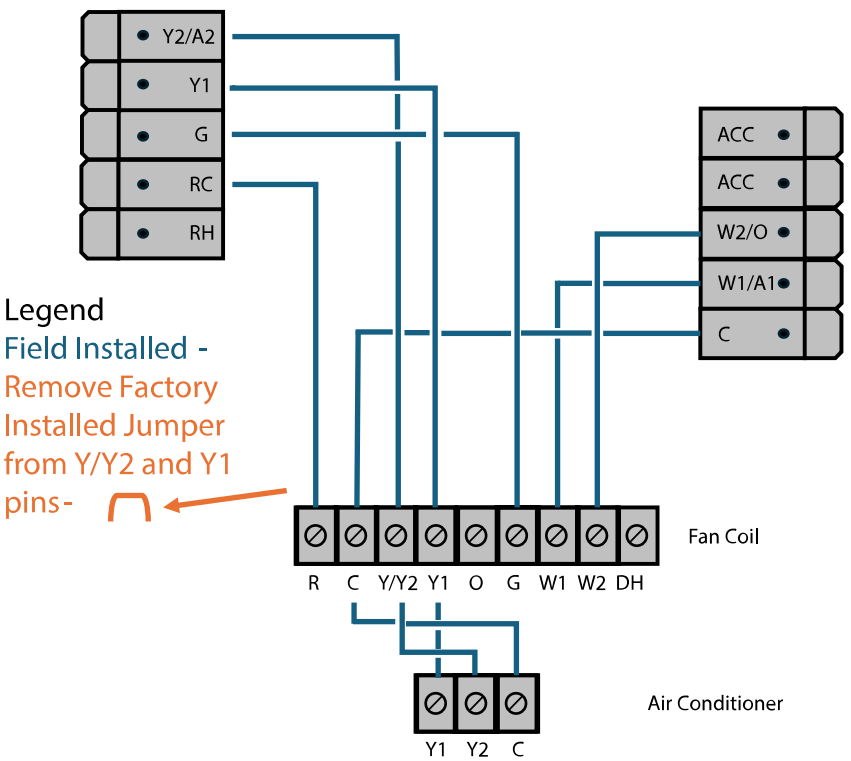

2 Stage InteliSense Fan Coil + 2 Stage Non -InteliSense Air Conditioner
System type and sub -type for manual installation: L1, 22

A250192A

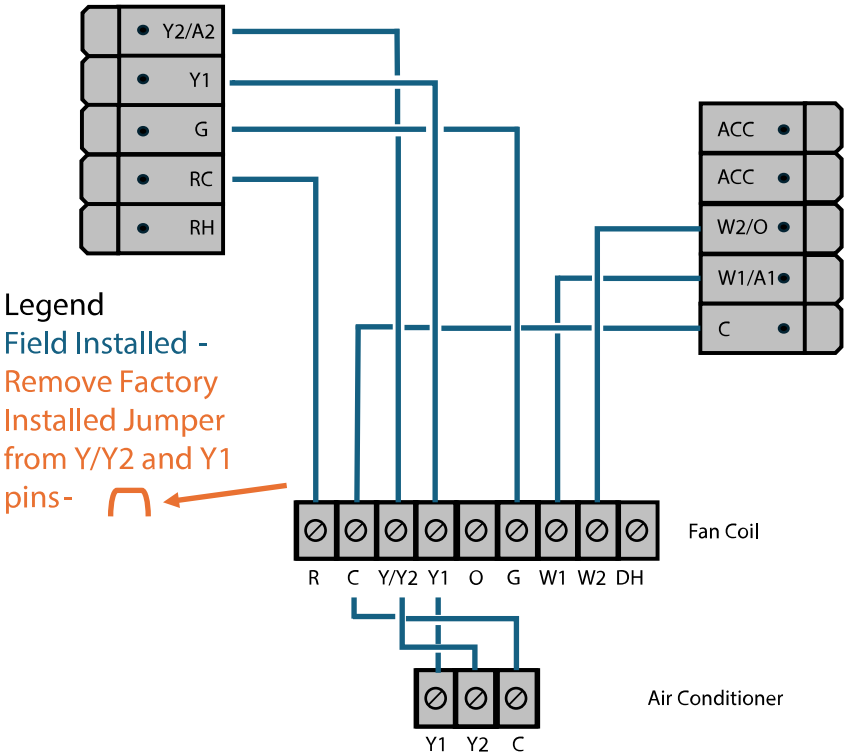

2 Stage InteliSense Fan Coil + 2 Stage InteliSense Air Conditioner
System type and sub -type for manual installation: L1, 22

A250193A

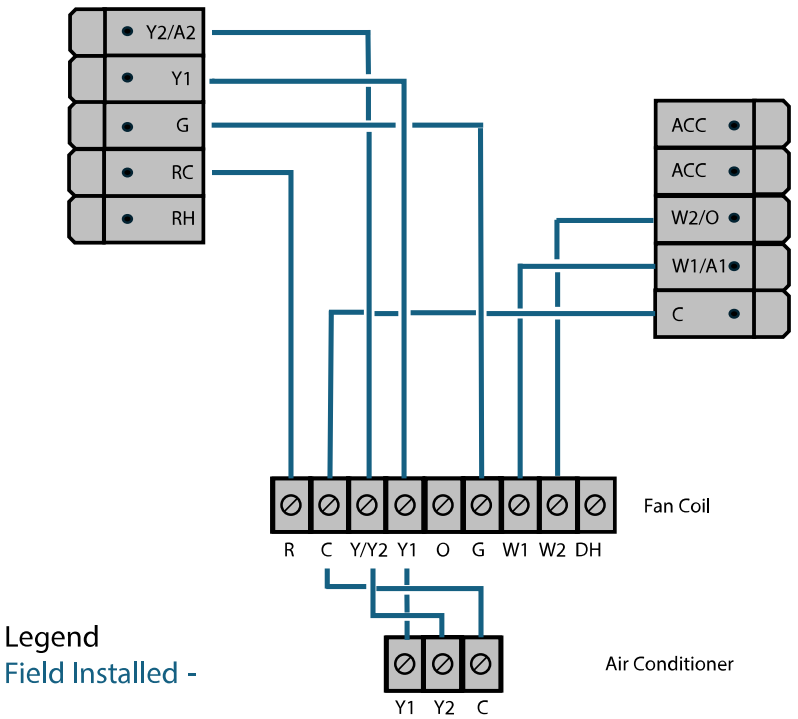

2 Stage Non-InteliSense Fan Coil + 2 Stage InteliSense Air Conditioner
System type and sub -type for manual installation: L1, 22

A250194A

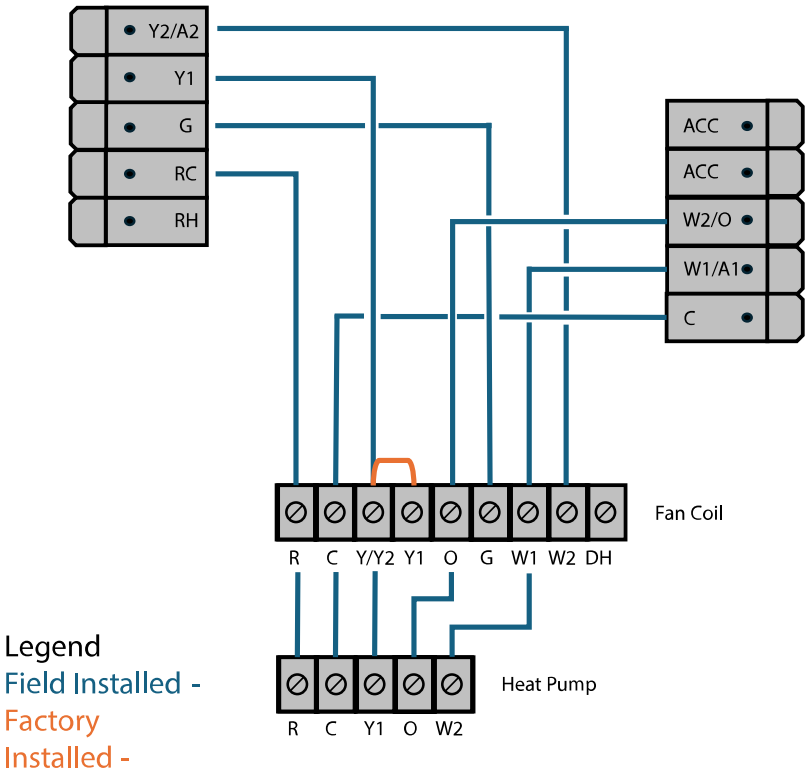

2 Stage InteliSense Fan Coil + 1 Stage InteliSense Heat Pump
System type and sub -type for manual installation: L2, 12

A250195A

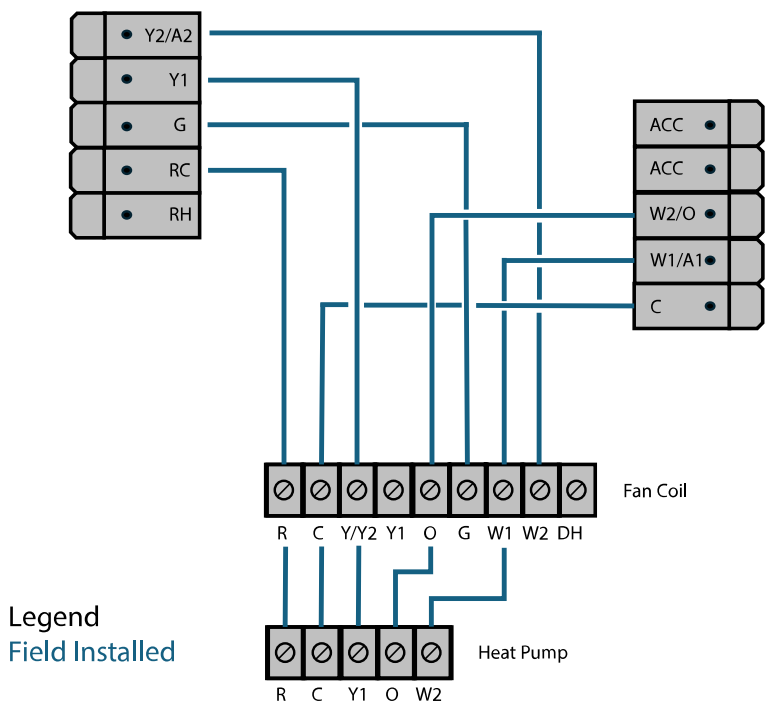

2 Stage Non-InteliSense Fan Coil + 1 Stage InteliSense Heat Pump
System type and sub -type for manual installation: L2, 12

A250196A

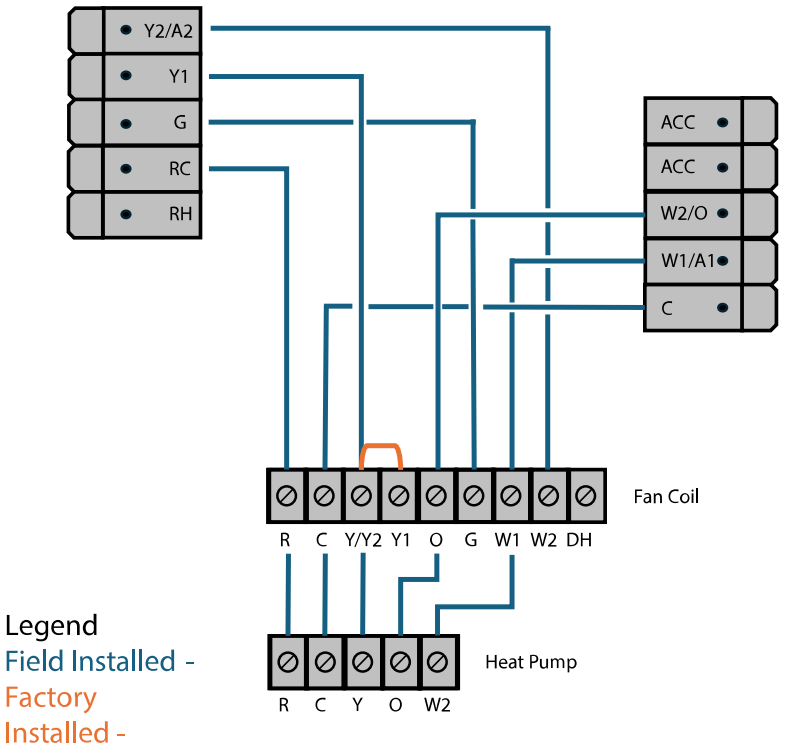

2 Stage InteliSense Fan Coil + 1 Stage Non -InteliSense Heat Pump
System type and sub -type for manual installation: L2, 12

A250197A

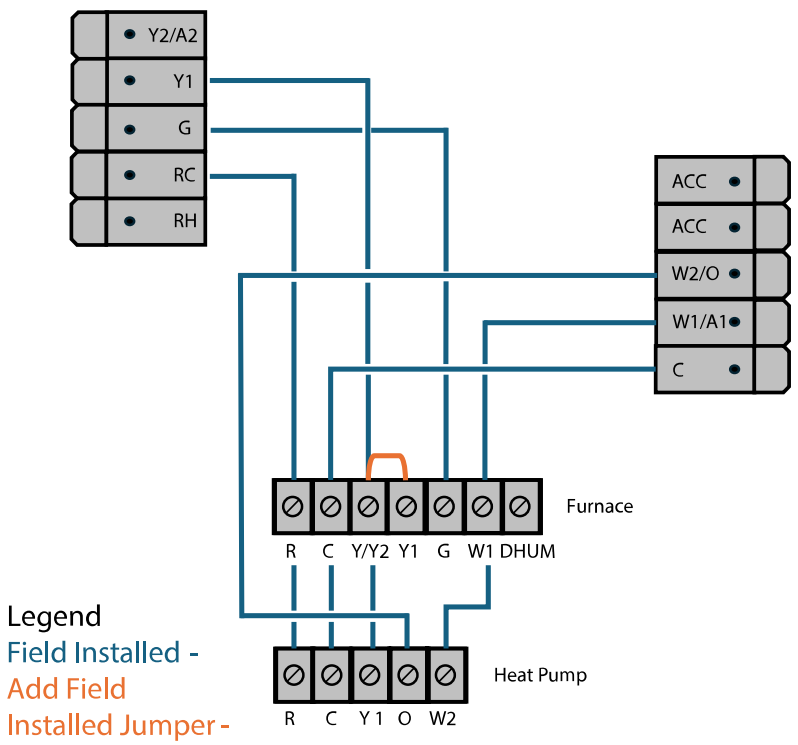

1 Stage InteliSense Furnace + 1 Stage InteliSense Heat Pump
System type and sub -type for manual installation: L3, 11

A250198A

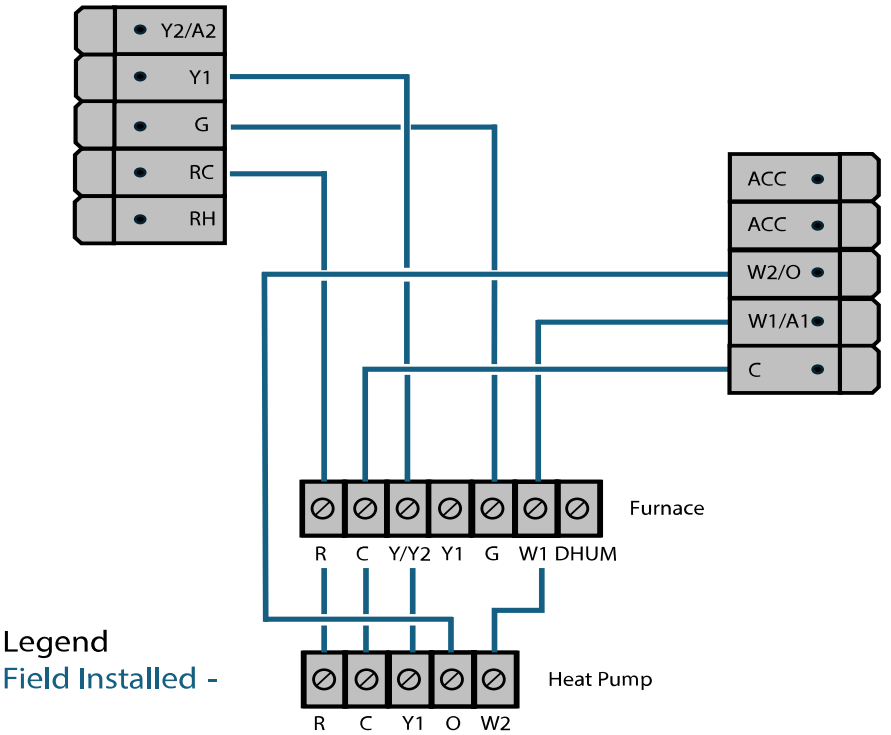

1 Stage Non-InteliSense Furnace + 1 Stage InteliSense Heat Pump
System type and sub -type for manual installation: L3, 11

A250199A

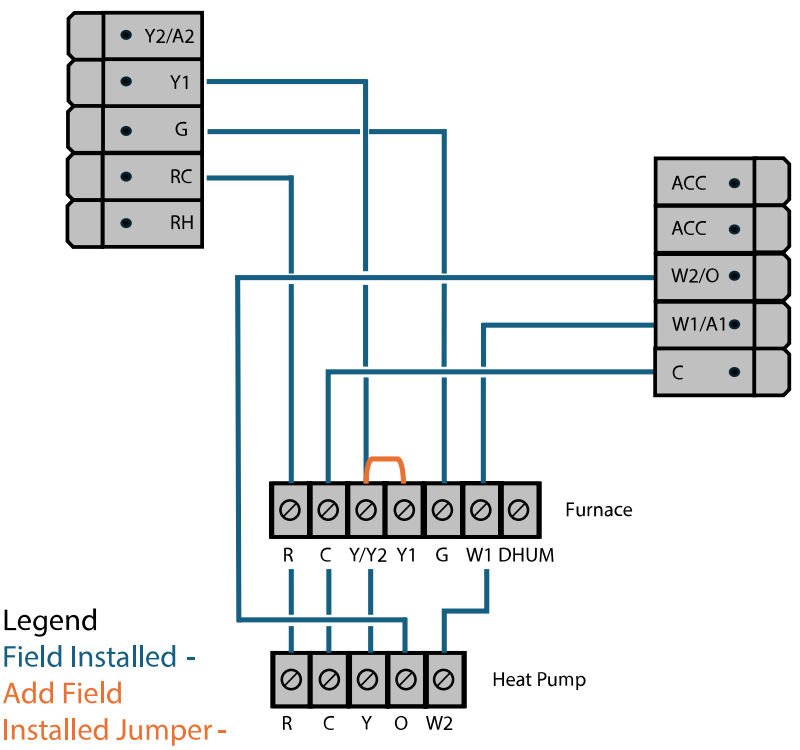

1 Stage InteliSense Furnace + 1 Stage Non -InteliSense Heat Pump
System type and sub -type for manual installation: L3, 11

A250200A

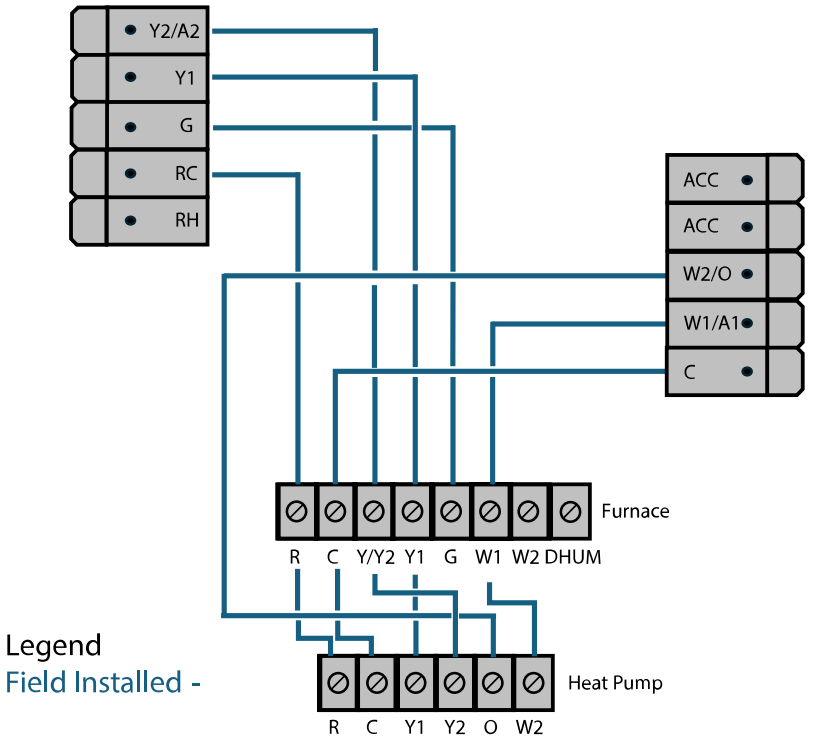

1 Stage InteliSense Furnace + 2 Stage InteliSense Heat Pump
System type and sub -type for manual installation: L3, 12

A250201A

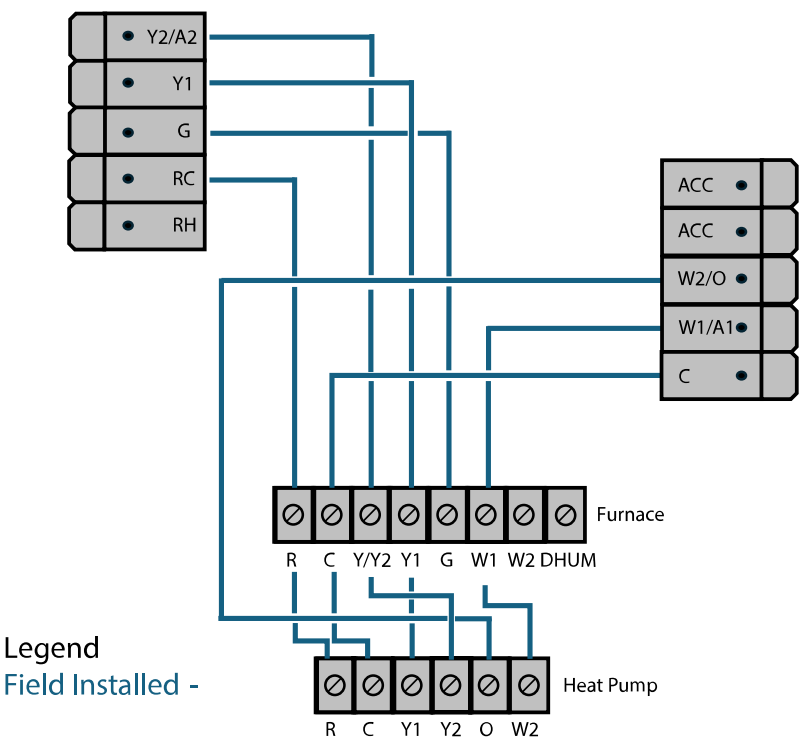

1 Stage InteliSense Furnace + 2 Stage Non -InteliSense Heat Pump
System type and sub -type for manual installation: L3, 21

A250202A

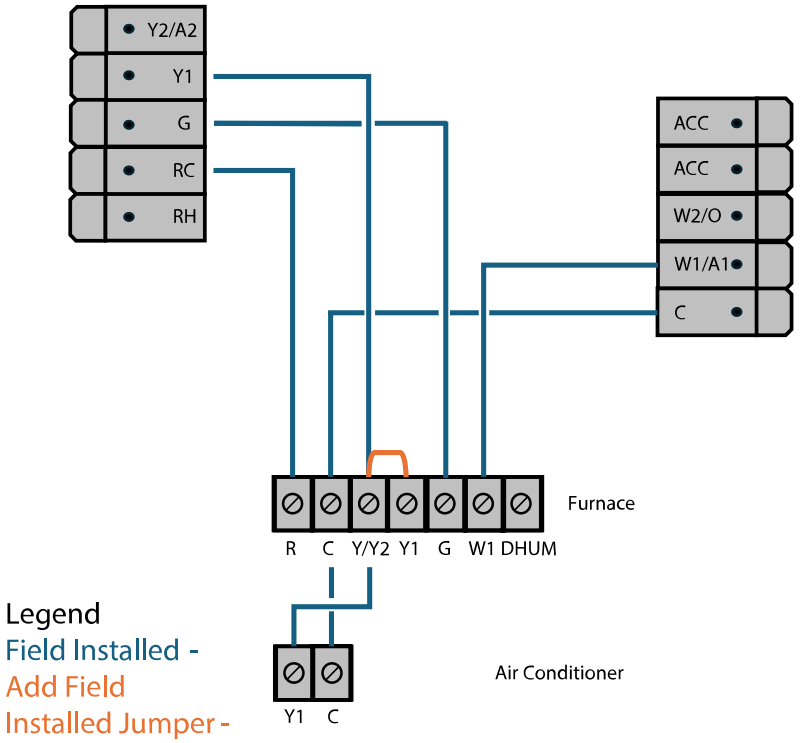

1 Stage InteliSense Furnace + 1 Stage InteliSense Air Conditioner
System type and sub -type for manual installation: L1, 11

A250203A

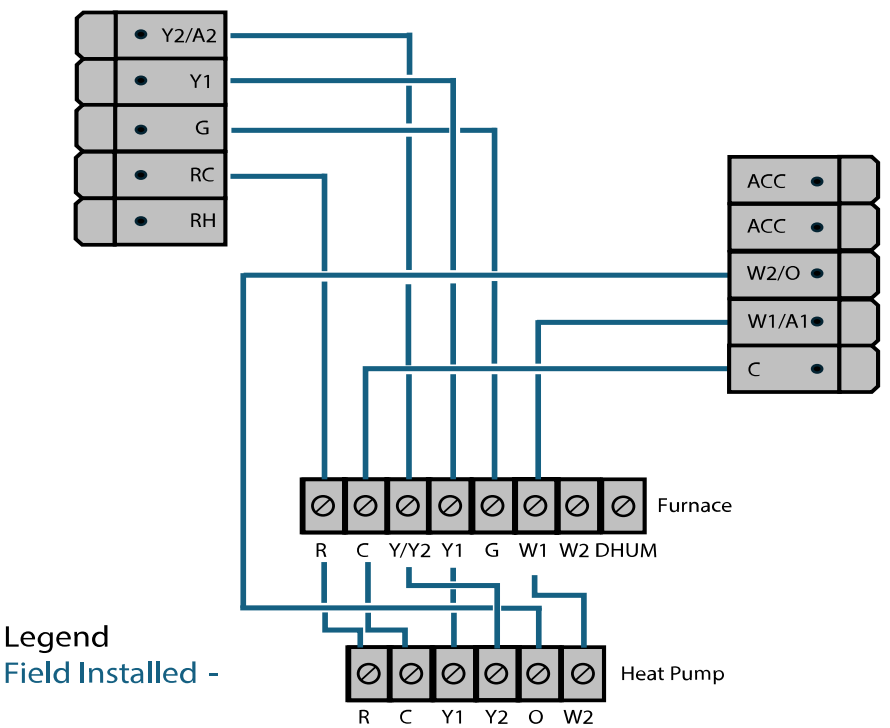

1 Stage Non-InteliSense Furnace + 2 Stage InteliSense Heat Pump
System type and sub -type for manual installation: L3, 21

A250204A

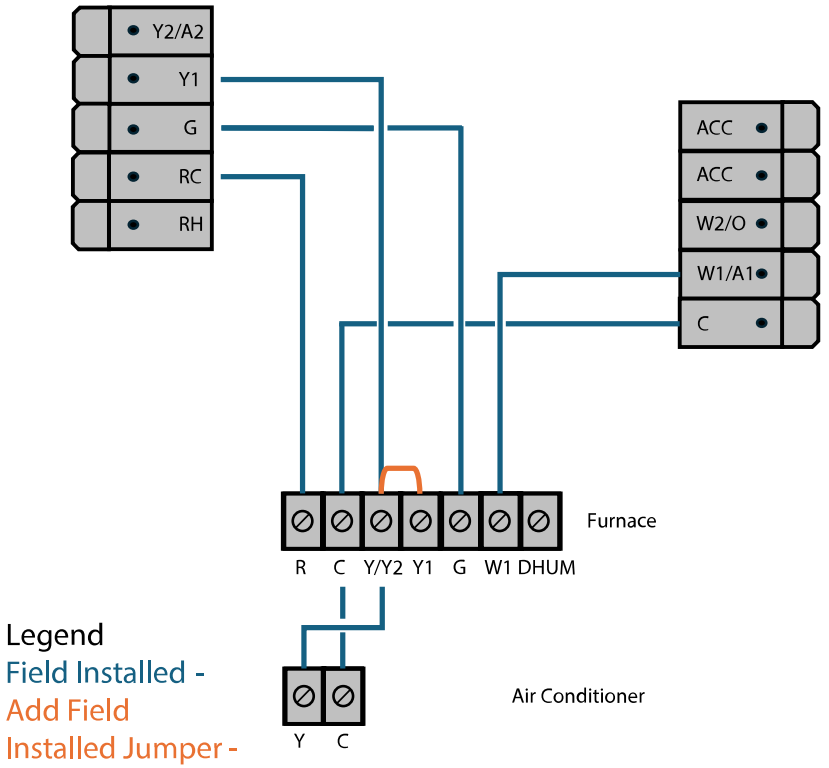

1 Stage InteliSense Furnace + 1 Stage Non -InteliSense Air Conditioner
System type and sub -type for manual installation: L1, 11

A250205A

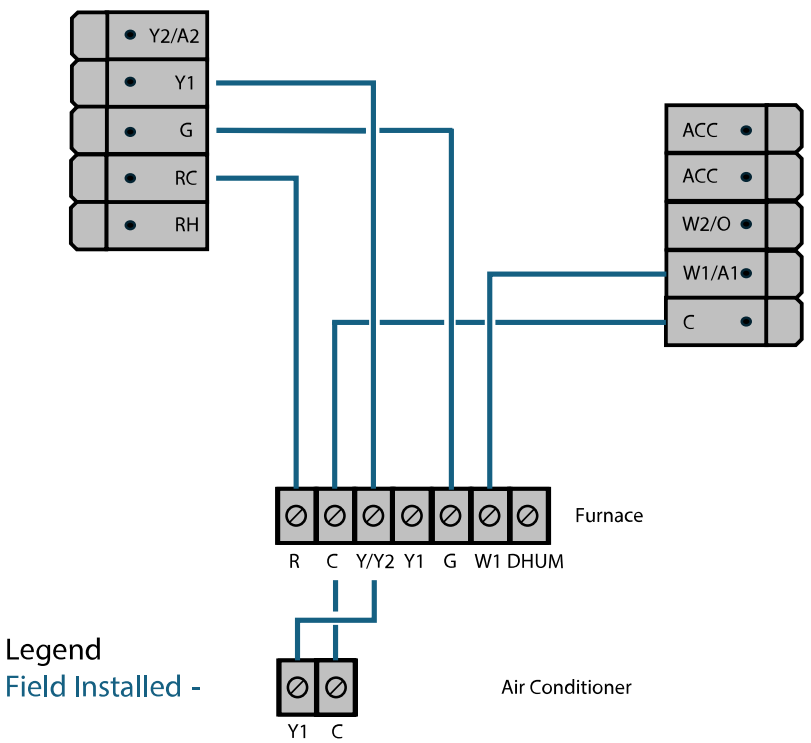

1 Stage Non -InteliSense Furnace + 1 Stage InteliSense Air Conditioner
System type and sub -type for manual installation: L1, 11

A250206A

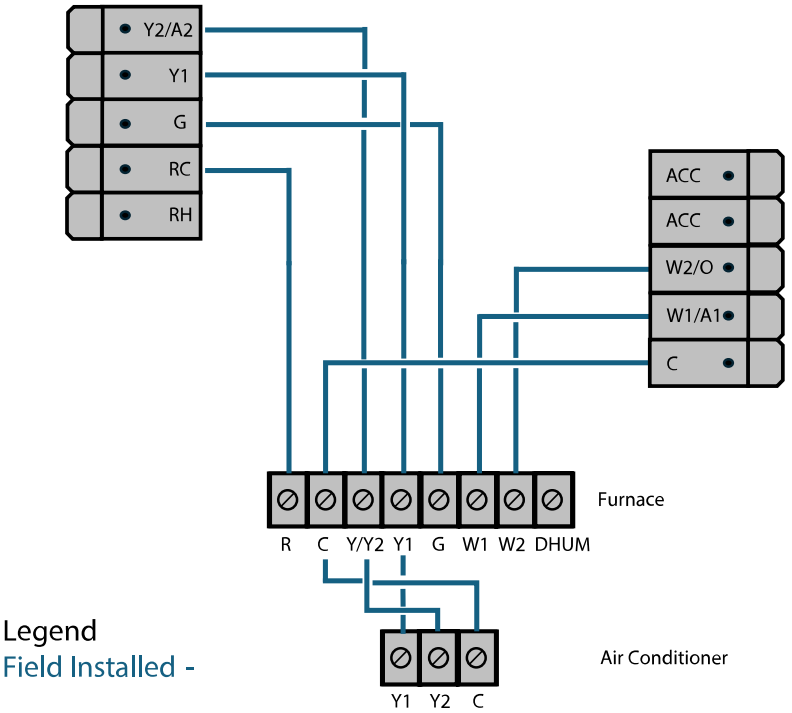

2 Stage Furnace + 2 Stage Air Conditioner
Wiring for InteliSense or Non InteliSense
System type and sub -type for manual installation: L1, 22

A250207A

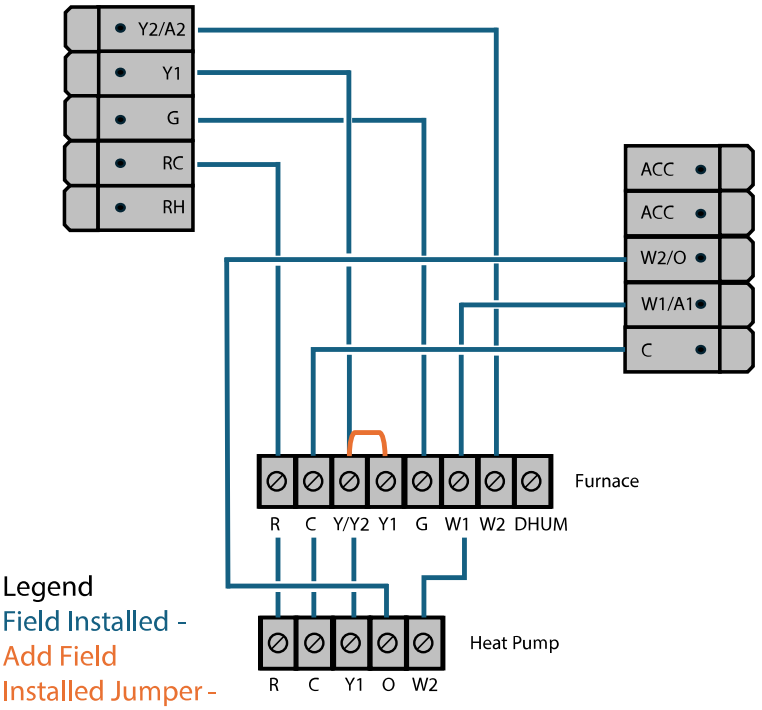

2 Stage InteliSense Furnace + 1 Stage InteliSense Heat Pump
System type and sub -type for manual installation: L3, 12

A250210A

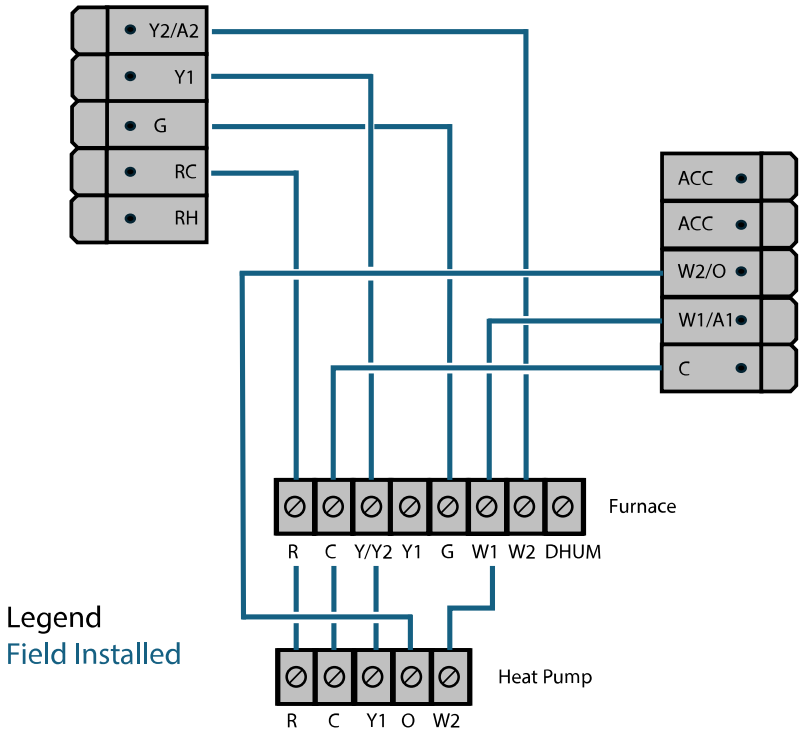

2 Stage Non-InteliSense Furnace + 1 Stage InteliSense Heat Pump
System type and sub -type for manual installation: L3, 12

A250211A

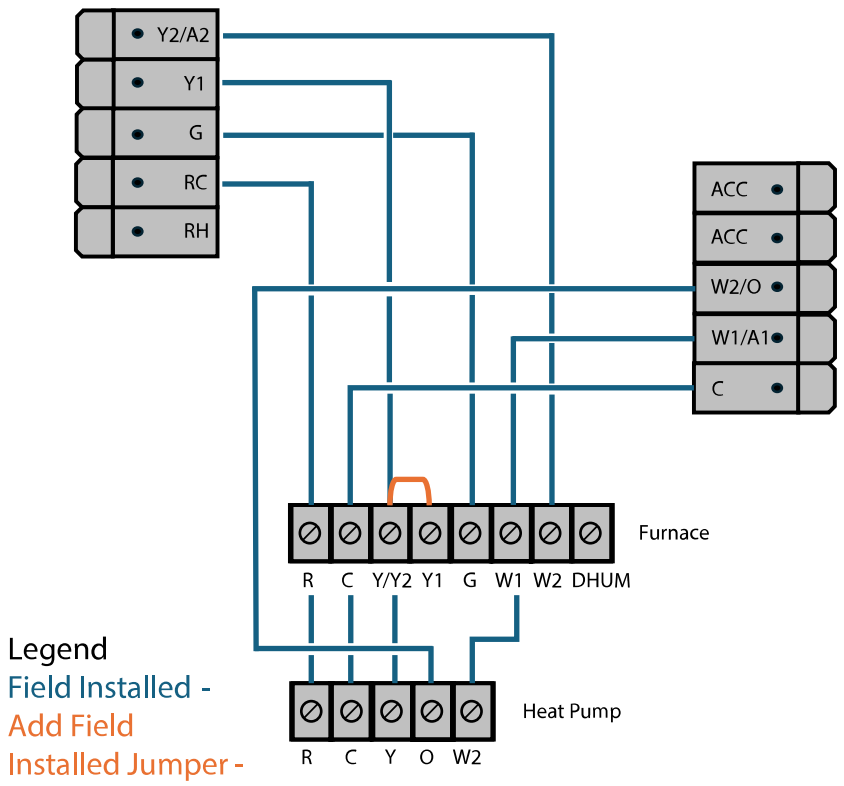

2 Stage InteliSense Furnace + 1 Stage Non -InteliSense Heat Pump
System type and sub -type for manual installation: L3, 12

A250212A

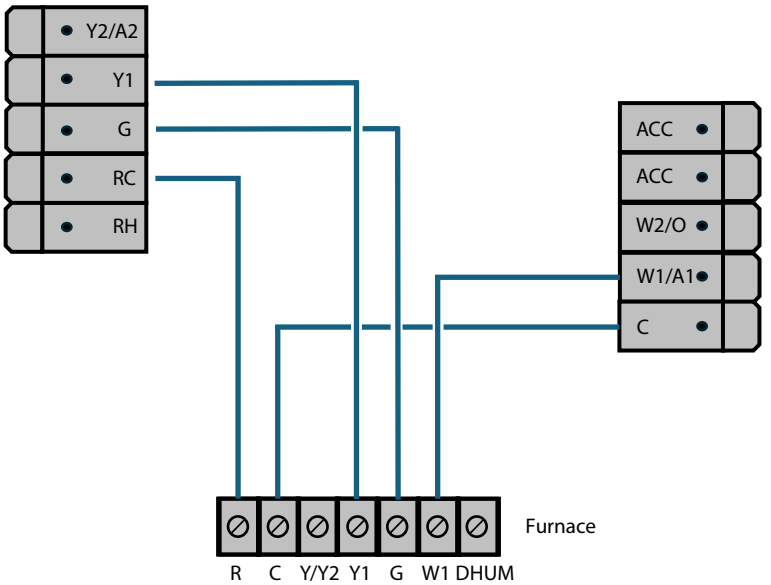

Legend
Field Installed -

InteliSense Furnace, Heating Only
System type and sub -type for manual installation: L1, 10

A250213A

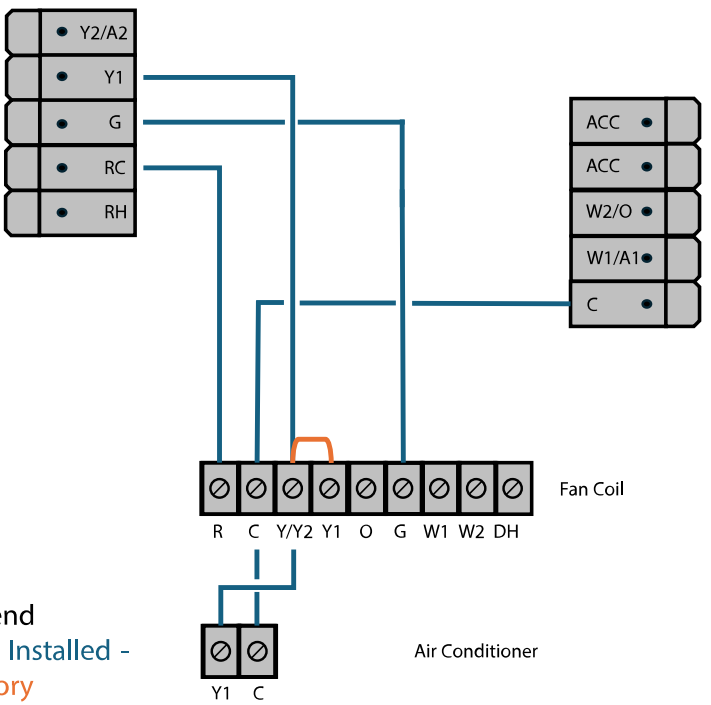

Legend
Field Installed -
Factory Installed -

InteliSense Fan Coil, Cooling Only
System type and sub -type for manual installation: L1, 01

A250214A

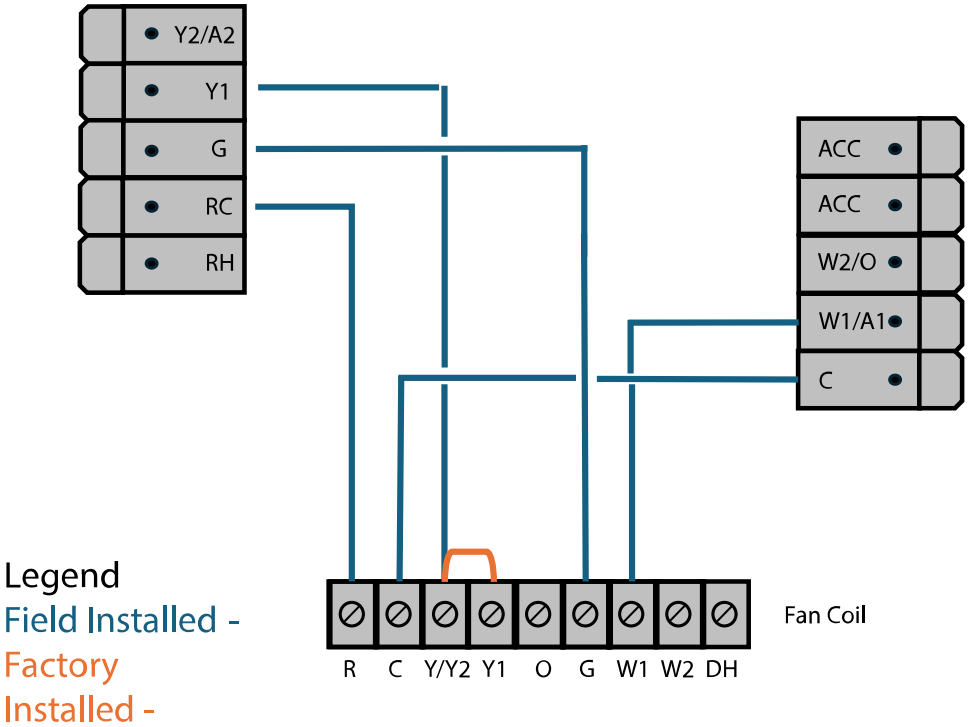

InteliSense Fan Coil, Heating Only
System type and sub -type for manual installation: L1, 10

A250215A

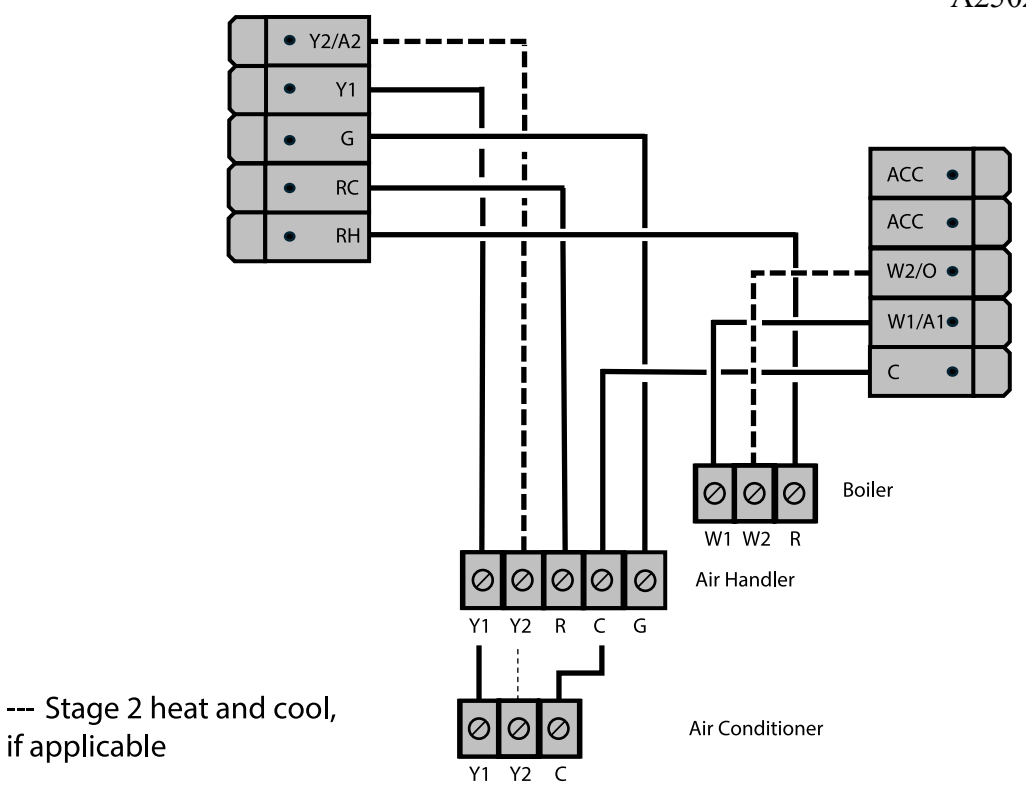

Non InteliSense Fan Coil AC with Boiler (Dual Transformer)

A250218A

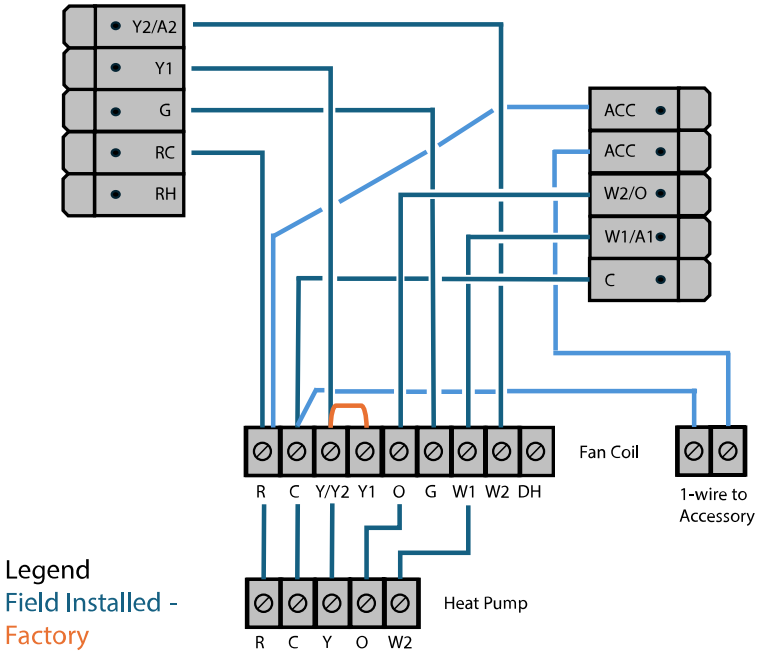

Legend
Field Installed -
Factory Installed -

2 Stage InteliSense Fan Coil + 1 Stage Non -InteliSense Heat Pump
with non-powered (1-wire) accessory
System type and sub -type for manual installation: L2, 12

A250219A

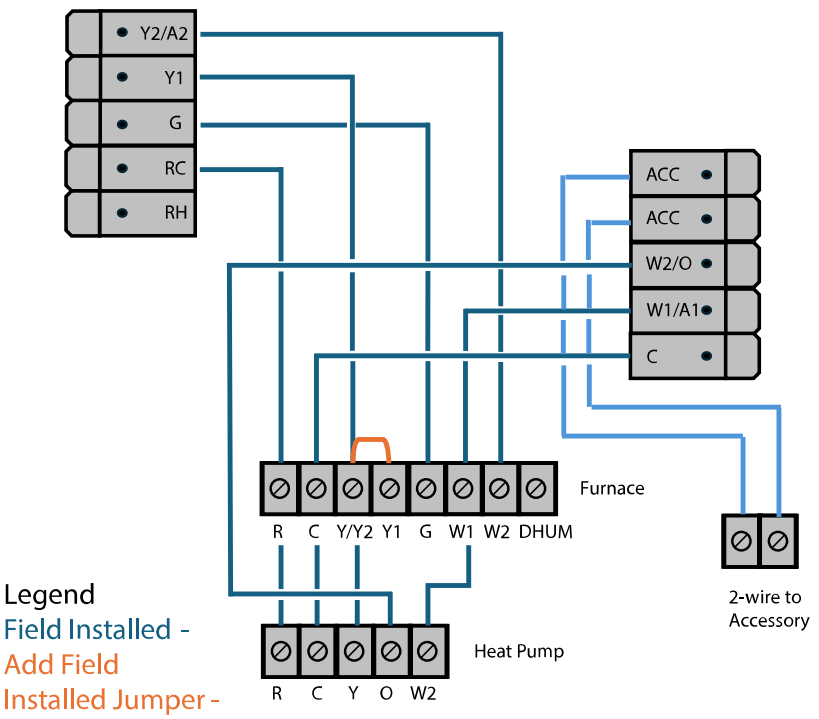

Legend
Field Installed -
Add Field Installed Jumper -

2 Stage InteliSense Furnace + 1 Stage Non -InteliSense Heat Pump
with 2-wire accessory
System type and sub -type for manual installation: L3, 12

A250220A

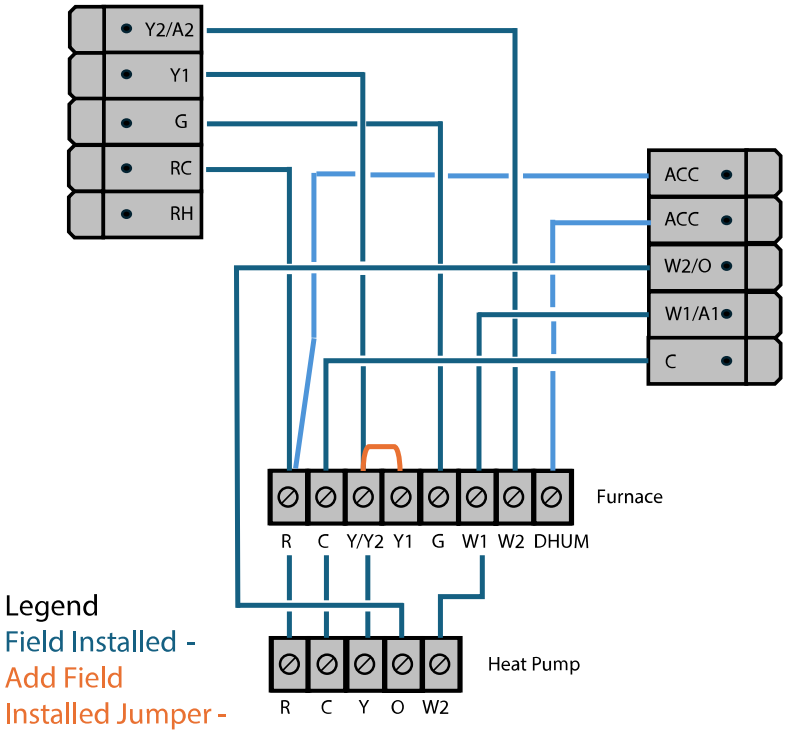

2 Stage InteliSense Furnace + 1 Stage Non -InteliSense Heat Pump with dehum
System type and sub -type for manual installation: L3, 12

A250221A

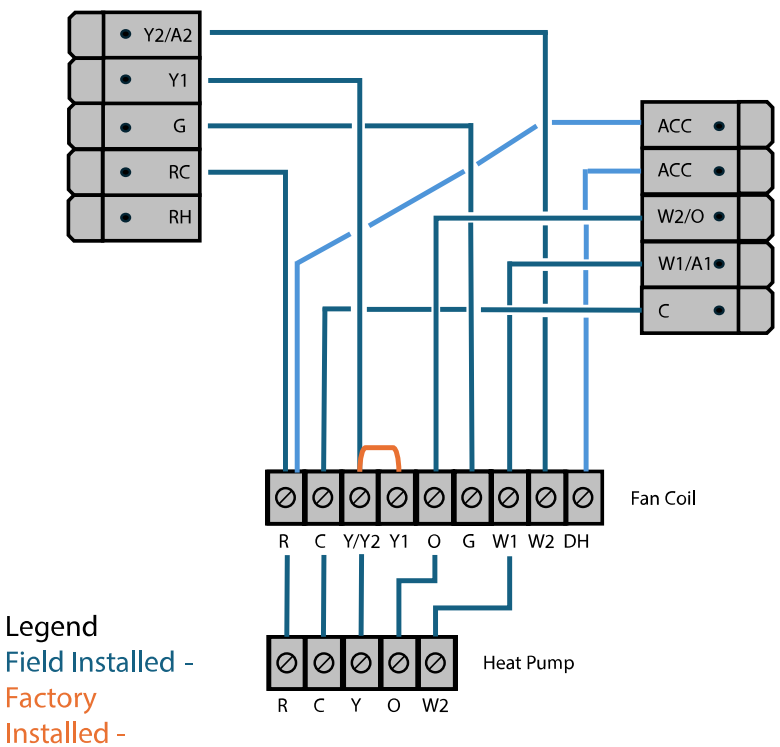

2 Stage InteliSense Fan Coil + 1 Stage Non -InteliSense Heat Pump with dehum
System type and sub -type for manual installation: L2, 12

A250222A

C-Wire Diagrams for InteliSense

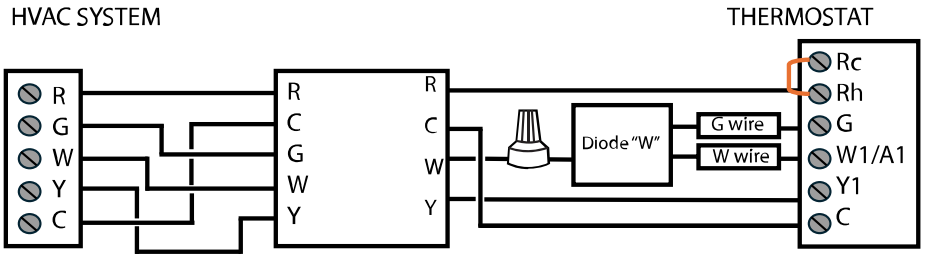

4 existing wires with C-Wire Adapter to accomodate
a thermostat that requires 5 wires

A250223 Rev E

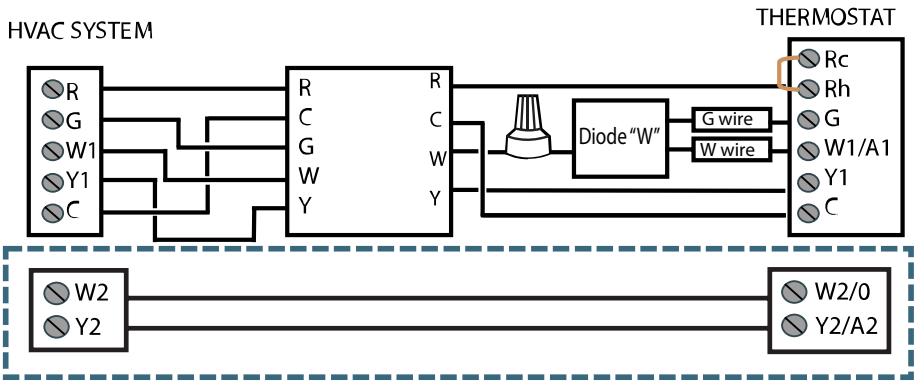

Additional wiring
For applications needing 1 extra wire

A250304B

Compliance and Certification

FCC:

This equipment has been tested and found to comply with the limits for a Class B digital device, pursuant to part 15 of the FCC rules.

These limits are designed to provide reasonable protection against harmful interference in a residential installation. This equipment generates, uses, and can radiate radio frequency energy and, if not used in accordance with the instructions, may cause harmful interference to radio communications.

There is no guarantee that interference will not occur in a particular installation. If this equipment does cause harmful interference to radio or television reception, the user is encouraged to try to correct the interference by one or more of the following measures:

- Reorient or relocate the receiving antenna.
- Increase or decrease the separation between the equipment and receiver.
- Connect the equipment into an outlet on a circuit different from that which the receiver is connected.
- Consult the place of purchase or an experienced remote control/TV technician for help.
- It is strongly recommended that the TV be plugged into a separate wall outlet.

The user is cautioned that changes and modifications made to this equipment without the approval of the manufacturer could void the user's authority to operate this equipment. This device complies with part 15 of the FCC rules. Operation is subject to the following two conditions: (1) This device may not cause harmful interference, and (2) this device must accept any interference received, including interference that may cause undesired operation.

UL Statement:

- Purpose of control: Room Thermostat
- Pollution Degree 2
- Impulse Voltage: 330V

© 2026 Carrier. All rights reserved.

A Carrier Company

Catalog No. II-TSTATBBIEWF-04
Replaces: II-TSTATBBIEWF-03
Edition Date: 05/26

Manufacturer reserves the right to discontinue, or change at any time, specifications or designs without notice and without obligations.