355BAV
Direct-Vent Upflow
Variable-Capacity Condensing Gas Furnace
For Sizes 060-120, Series C

Installation, Start-Up and Operating Instructions

Visit www.Bryant.com

NOTE: Read the entire instruction manual before starting the installation.

NOTE: **This furnace can be installed as a (2-pipe) direct vent or as an optional ventilated combustion air application.**

NOTE: Special Venting Requirements for Installations in Canada

Installation in Canada must conform to the requirements of CSA B149 code. Vent systems **must** be composed of pipe, fittings, cements, and primers listed to ULC S636. The special vent fittings and accessory concentric vent termination kits and accessory external drain trap have been certified to ULC S636 for use with those IPEX PVC vent components which have been certified to this standard. In Canada, the primer and cement must be of the same manufacturer as the vent system - IPEX System 636, PVC/CPVC Primer, Purple Violet for Flue Gas Venting and IPEX System 636(1)™, PVC Cement for Flue Gas Venting, rated Class IIA, 65 deg C. must be used with this venting system - do not mix primers and cements from one manufacturer with a vent system from a different manufacturer. Follow the manufacturer's instructions in the use of primer and cement and never use primer or cement beyond its expiration date.

The safe operation, as defined by ULC S636, of the vent system is based on following these installation instructions, the vent system manufacturer's installation instructions, and proper use of primer and cement. All fire stop and roof flashing used with this system must be UL listed material. Acceptability under Canadian standard CSA B149 is dependent upon full compliance with all installation instructions. Under this standard, it is recommended that the vent system be checked once a year by qualified service personnel.

The authority having jurisdiction (gas inspection authority, municipal building department, fire department, etc) should be consulted before installation to determine the need to obtain a permit.

Consignes spéciales pour l'installation de ventillation au Canada

L'installation faite au Canada doit se conformer aux exigences du code CSA B149. Ce systême de ventillation **doit** se composer de tuyaux, raccords, ciments et apprêts conformes au ULC S636. La tuyauterie de ventillation des gaz, ses accessoires, le terminal concentrique mural ainsi que l'ensemble du drain de condensat extérieur ont été certifiés ULCS 636 pour l'application des composantes IPEX PVC qui sont certifiées à ce standard. Au Canada l'apprêt et le ciment doivent être du même manufacturier que le systême de ventillation - IPEX Système 636, Apprêt PVC/CPVC. Mauve Violette pour conduit en évacuation des gaz et IPEX Système 636(1)™, ciment pour PVC pour conduit en évacuation des gaz, évalué CLASSE IIA, 65 deg. C. doit ëtre utilisé avec ce systèeme d'évacuation - ne pas mélanger l'apprêt et le ciment d'un manufacturier avec le systême de ventillation d'un autre manufacturier. Bien suivre les indications du manufacturier lors de l'utilisation de l'apprêt et du ciment et ne pas utiliser ceux-ci si la date d'expiration est atteinte.

L'opération sécuritaire, tel que définit par ULC S636, du système de ventilation est basé sur les instructions d'installation suivantes, ainsi que l'usage approprié de l'apprêt et ciment. Tout arrët feu et solin de toit utilisés avec ce système doivent être des matériaux listés UL. L'acceptation du standard Canadien CSA B419 est directement relié à l'installation conforme aux instructions ci- haut mentionnées. Le standard Canadien recommande l' inspection par un personel qualifié et ce, une fois par année.

Les autoritées ayant juridiction (inspecteurs de gas, inspecteurs en bâtiments, département des incendies, etc) devraient être consultées avant l'installation afin de déterminer si un permis est requis.

(1) System 636 is a trademark of IPEX Inc.

TABLE OF CONTENTS

PAGE

REQUIRED NOTICE FOR MASSACHUSETTS INSTALLATIONS 3
SAFETY CONSIDERATIONS 4
DIMENSIONAL DRAWING 5
Clearances to Combustibles 6
CODES AND STANDARDS 7
ELECTROSTATIC DISCHARGE (ESD) PRECAUTIONS . . . 8
INTRODUCTION 8
APPLICATIONS 8
General 8
Applications 8
LOCATION 10
General 10
Low-Heat Only Installation 12
Location Relative to Cooling Equipment 12
Hazardous Locations 12
INSTALLATION 12
Leveling Legs (If Desired) 12
Air Ducts 13
Filter Arrangement 13
Bottom Closure Panel 14
Gas Piping 14
Electrical Connections 16
Removal of Existing Furnaces from Common Vent Systems 20
Combustion-air and Vent Pipe Systems 20
Physical Data 33
Condensate Drain 34
START-UP, ADJUSTMENTS, AND SAFETY CHECK 35
General 35
Select Setup Switch Positions 35
Prime Condensate Trap with Water 35
Purge Gas Lines 37
Sequence of Operation 37
Adjustments 44
Check Safety Controls 49
CHECKLIST 51

As an ENERGY STAR® Partner, Bryant Corporation has determined that this product meets the ENERGY STAR® guidelines for energy efficiency.

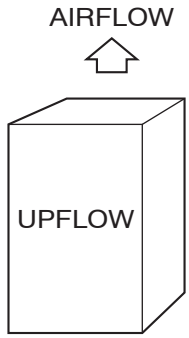

A06340

Fig. 1 - Furnace Orientation

IMPORTANT

The Commonwealth of Massachusetts requires compliance with regulation 248 CMR as follows:

5.08: Modifications to NFPA-54, Chapter 10

2) Revise 10.8.3 by adding the following additional requirements:

a. For all side wall horizontally vented gas fueled equipment installed in every dwelling, building or structure used in whole or in part for residential purposes, including those owned or operated by the Commonwealth and where the side wall exhaust vent termination is less than seven (7) feet above finished grade in the area of the venting, including but not limited to decks and porches, the following requirements shall be satisfied:

1. INSTALLATION OF CARBON MONOXIDE DETECTORS. At the time of installation of the side wall horizontal vented gas fueled equipment, the installing plumber or gasfitter shall observe that a hard wired carbon monoxide detector with an alarm and battery back-up is installed on the floor level where the gas equipment is to be installed. In addition, the installing plumber or gasfitter shall observe that a battery operated or hard wired carbon monoxide detector with an alarm is installed on each additional level of the dwelling, building or structure served by the side wall horizontal vented gas fueled equipment. It shall be the responsibility of the property owner to secure the services of qualified licensed professionals for the installation of hard wired carbon monoxide detectors

   a. In the event that the side wall horizontally vented gas fueled equipment is installed in a crawl space or an attic, the hard wired carbon monoxide detector with alarm and battery back-up may be installed on the next adjacent floor level.

   b. In the event that the requirements of this subdivision can not be met at the time of completion of installation, the owner shall have a period of thirty (30) days to comply with the above requirements; provided, however, that during said thirty (30) day period, a battery operated carbon monoxide detector with an alarm shall be installed.

2. APPROVED CARBON MONOXIDE DETECTORS. Each carbon monoxide detector as required in accordance with the above provisions shall comply with NFPA 720 and be ANSI/UL 2034 listed and IAS certified.

3. SIGNAGE. A metal or plastic identification plate shall be permanently mounted to the exterior of the building at a minimum height of eight (8) feet above grade directly in line with the exhaust vent terminal for the horizontally vented gas fueled heating appliance or equipment. The sign shall read, in print size no less than one-half (1/2) inch in size, "GAS VENT DIRECTLY BELOW. KEEP CLEAR OF ALL OBSTRUCTIONS".

4. INSPECTION. The state or local gas inspector of the side wall horizontally vented gas fueled equipment shall not approve the installation unless, upon inspection, the inspector observes carbon monoxide detectors and signage installed in accordance with the provisions of 248 CMR 5.08(2)(a)1 through 4.

5. EXEMPTIONS: The following equipment is exempt from 248 CMR 5.08(2)(a)1 through 4:

   (1.) The equipment listed in Chapter 10 entitled "Equipment Not Required To Be Vented" in the most current edition of NFPA 54 as adopted by the Board; and

   (2.) Product Approved side wall horizontally vented gas fueled equipment installed in a room or structure separate from the dwelling, building or structure used in whole or in part for residential purposes.

c. MANUFACTURER REQUIREMENTS - GAS EQUIPMENT VENTING SYSTEM PROVIDED. When the manufacturer of Product Approved side wall horizontally vented gas equipment provides a venting system design or venting system components with the equipment, the instructions provided by the manufacturer for installation of the equipment and the venting system shall include:

1. Detailed instructions for the installation of the venting system design or the venting system components; and
2. A complete parts list for the venting system design or venting system.

d. MANUFACTURER REQUIREMENTS - GAS EQUIPMENT VENTING SYSTEM NOT PROVIDED. When the manufacturer of a Product Approved side wall horizontally vented gas fueled equipment does not provide the parts for venting the flue gases, but identifies "special venting systems", the following requirements shall be satisfied by the manufacturer:

1. The referenced "special venting system" instructions shall be included with the appliance or equipment installation instructions; and
2. The "special venting systems" shall be Product Approved by the Board, and the instructions for that system shall include a parts list and detailed installation instructions.

e. A copy of all installation instructions for all Product Approved side wall horizontally vented gas fueled equipment, all venting instructions, all parts lists for venting instructions, and/or all venting design instructions shall remain with the appliance or equipment at the completion of the installation.

For questions regarding these requirements, please contact the Commonwealth of Massachusetts Board of State Examiners of Plumbers and Gas Fitters, 239 Causeway Street, Boston, MA 02114. 617-727-9952.

SAFETY CONSIDERATIONS

⚠ CAUTION

FURNACE RELIABILITY HAZARD

Improper installation or misapplication of furnace may require excessive servicing or cause premature component failure.

Application of this furnace should be indoors with special attention given to vent sizing and material combustion air requirements, gas input rate, air temperature rise, unit leveling, and unit sizing.

⚠ WARNING

FIRE, EXPLOSION, ELECTRICAL SHOCK AND CARBON MONOXIDE POISONING HAZARD

Failure to follow this warning could result in electrical shock, fire, personal injury, or death.

Improper installation, adjustment, alteration, service, maintenance, or use can cause carbon monoxide poisoning, explosion, fire, electrical shock, or other conditions which may cause personal injury or property damage. Consult a qualified installer, service agency, local gas supplier, or your distributor or branch for information or assistance. The qualified installer or agency must use only factory-authorized and listed kits or accessories when modifying this product.

Installing and servicing heating equipment can be hazardous due to gas and electrical components. **Only trained and qualified personnel should install, repair, or service heating equipment.** Untrained personnel can perform basic maintenance functions such as cleaning and replacing air filters. All other operations must be performed by trained service personnel. When working on heating equipment, observe precautions in literature, on tags, and on labels attached to or shipped with unit and other safety precautions that may apply.

These instructions cover the minimum requirements and conform to existing national standards and safety codes. In some instances, these instructions exceed certain local codes and ordinances, especially those that may not have kept up with changing residential construction practices. We require these instructions as a minimum for a safe installation.

Follow all safety codes. Wear safety glasses, protective clothing, and work gloves. Have a fire extinguisher available. Read these instructions thoroughly and follow all warnings or cautions include in literature and attached to the unit. Consult local building codes, the current editions of the National Fuel Gas Code (NFGC) NFPA 54/ANSI Z223.1 and the National Electrical Code (NEC) NFPA 70.

In Canada, refer to the current editions of the National Standards of Canada CAN/CSA-B149.1 and .2 Natural Gas and Propane Installation Codes, and Canadian Electrical Code CSA C22.1

Wear safety glasses and work gloves. Have a fire extinguisher available during start-up and adjustment procedures and service calls.

Recognize safety information. This is the safety-alert symbol ⚠. When you see this symbol on the furnace and in instructions or manuals, be alert to the potential for personal injury.

Understand the signal words DANGER, WARNING, and CAUTION. These words are used with the safety-alert symbol. DANGER identifies the most serious hazards which **will** result in severe personal injury or death. WARNING signifies a hazard which **could** result in personal injury or death. CAUTION is used to identify unsafe practices which **may** result in minor personal injury or product and property damage. NOTE is used to highlight suggestions which **will** result in enhanced installation, reliability, or operation.

⚠ CAUTION

CUT HAZARD

Failure to follow this caution may result in personal injury.

Sheet metal parts may have sharp edges or burrs. Use care and wear appropriate protective clothing and gloves when handling parts.

The 58UVB Condensing Gas-Fired Furnaces are CSA (formerly AGA and CGA) design-certified for natural and propane gases (see furnace rating plate) and for installation in alcoves, attics, basements, closets, utility rooms, crawlspaces, and garages. The furnace is factory-shipped for use with natural gas. A CSA listed gas conversion kit is required to convert furnace for use with propane gas.

See Fig. 3 for required clearances to combustibles.

Maintain a 1-in. (25 mm) clearance from combustible materials to supply air duct work for a distance of 36 inches horizontally from the furnace. See NFPA 90B or local code for further requirements.

These furnaces SHALL NOT be installed directly on carpeting, tile, or any other combustible material other than wood flooring. These furnaces are suitable for installation in a structure built on site or a manufactured building completed at final site. The design of this furnace line is NOT CSA design-certified for installation in recreation vehicles, manufactured (mobile) homes or outdoors.

This furnace is designed for continuous return-air minimum temperature of 60°F db or intermittent operation down to 55°F db such as when used with a night setback thermostat. Return-air temperature must not exceed 80°F db. Failure to follow these return air limits may affect reliability of heat exchangers, motors and controls. (See Fig. 4.)

These furnaces are shipped for UPFLOW applications ONLY. See details in Applications section.

Install this furnace only in a location and position as specified in LOCATION and INSTALLATION sections of these instructions.

Combustion products must be discharged outdoors. Connect this furnace to an approved vent system only, as specified in the Combustion Air and Vent piping sections of these instructions.

Never test for gas leaks with an open flame. Use a commercially available soap solution made specifically for detection of leaks to check all connections as specified in the GAS PIPING section of these instructions.

Always install the furnace to operate within the furnace's intended rise range with a duct system which has an external static pressure within the allowable range as specified in the SET TEMPERATURE RISE section of these instructions.

When a furnace is installed so that supply ducts carry air circulated by the furnace to areas outside the space containing the furnace, the return air shall also be handled by ducts sealed to the furnace casing and terminating outside the space containing the furnace.

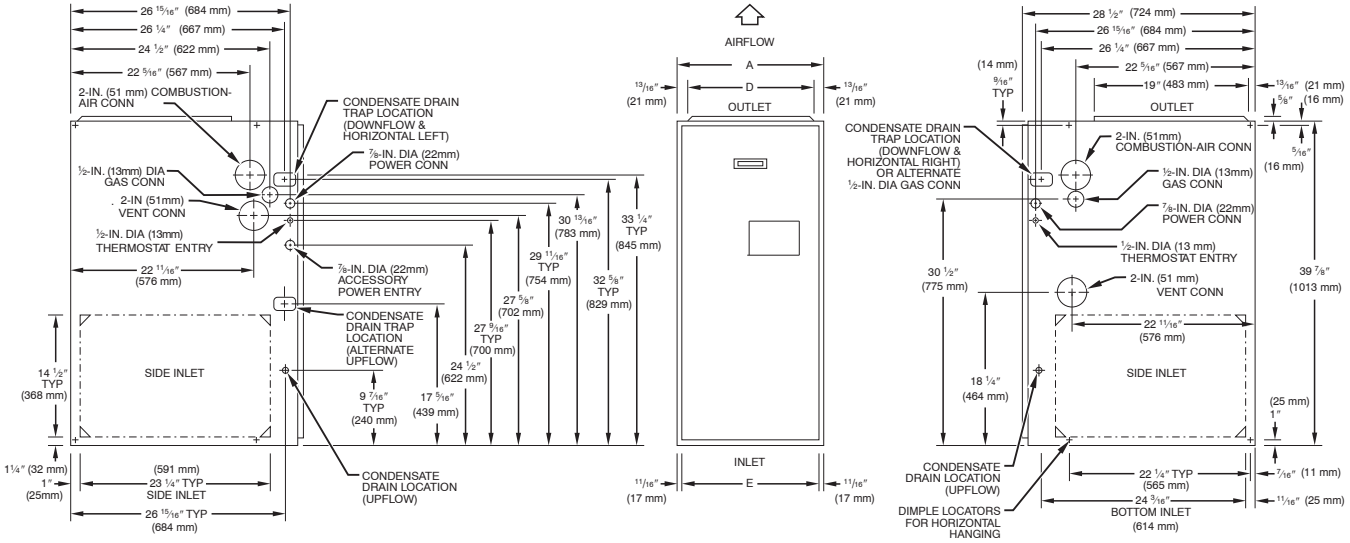

NOTES: 1. Minimum return-air openings at furnace, based on metal duct. If flex duct is used, see flex duct manufactureris recommendations for equivalent diameters.
2. Minimum return-air opening at furnace:
a. For 800 CFM–16-in. (406mm) round or 14 1/2 (368 mm)x 12-in. (305 mm) rectangle
b. For 1200 CFM–20-in. (508mm) round or 14 1/2 (368mm)x 19 1/2-in. (495mm) rectangle
c. For 1600 CFM–22-in. (559mm) round or 14 1/2 (368mm)x 23 1/4-in.(591mm) rectangle
d. For airflow requirements above 1800 CFM, see Air Delivery table in Product Data literature for specific use of single side inlets. The use of both side inlets, a combination of 1 side and the bottom, or the bottom only will ensure adequate return air openings for airflow requirements above 1800 CFM.

A05124

Dimensions - In. (mm)

UNIT SIZE	A	D	E
060–14 / 042060	17–1/2 / 445	15–7/8 / 403	16 / 406
080–14 / 042080	21 / 533	19–3/8 / 492	19–1/2 / 495
080–20 / 060080	21 / 533	19–3/8 / 492	19–1/2 / 495
100–20 / 060100	21 / 533	19–3/8 / 492	19–1/2 / 495
120–20 / 060120	24–1/2 / 622	22–7/8 / 581	23 / 584

Fig. 2 - Dimensional Drawing

A gas-fired furnace for installation in a residential garage must be installed as specified in the Hazardous Locations section of these instructions and Fig. 5.

The furnace may be used for construction heat provided that the furnace installation and operation complies with the first CAUTION in the LOCATION section of these instructions.

This gas furnace may be used for construction heat provided that:

- The furnace is permanently installed with all electrical wiring, piping, air filters, venting and ducting installed according to these installation instructions. A return air duct is provided, sealed to the furnace casing, and terminated outside the space containing the furnace. This prevents a negative pressure condition as created by the circulating air blower, causing a flame rollout and/or drawing combustion products into the structure.
- The furnace is controlled by a thermostat. It may not be “hot wired” to provide heat continuously to the structure without thermostatic control.
- Clean outside air is provided for combustion. This is to minimize the corrosive effects of adhesives, sealers and other construction materials. It also prevents the entrainment of drywall dust into combustion air, which can cause fouling and plugging of furnace components.
- The temperature of the return air to the furnace is maintained between 55°F (13°C) and 80°F (27°C), with no evening setback or shutdown. The use of the furnace while the structure is under construction is deemed to be intermittent operation per our installation instructions.
- The air temperature rise is within the rated rise range on the furnace rating plate, and the firing rate has been set to the nameplate value.
- The filters used to clean the circulating air during the construction process must be either changed or thoroughly cleaned prior to occupancy.
- The furnace, ductwork and filters are cleaned as necessary to remove drywall dust and construction debris from all HVAC system components after construction is completed.
- After construction is complete, verify furnace operating conditions including ignition, input rate, temperature rise and venting, according to the manufacturer’s instructions.

INSTALLATION

- This forced air furnace is equipped for use with natural gas at altitudes 0 - 10,000 ft (0 - 3,050m), except 140 size furnaces are only approved for altitudes 0 - 7,000 ft. (0 - 2,135m).
- An accessory kit, supplied by the manufacturer, shall be used to convert to propane gas use or may be required for some natural gas applications.
- This furnace is for indoor installation in a building constructed on site. This furnace may be installed in a manufactured (mobile) home when stated on rating plate and using factory authorized kit..
- This furnace may be installed on combustible flooring in alcove or closet at **Minimum Inches Clearance To Combustible Construction** as described below.
- This furnace requires a special venting system. Refer to the installation instructions for parts list and method of installation. This furnace is for use with schedule-40 PVC, PVC-DWV, CPVC, or ABS-DWV pipe, and must not be vented in common with other gas-fired appliances. Construction through which vent/air intake pipes may be installed is maximum 24 inches (610 mm), minimum 3/4 inches (19 mm) thickness (including roofing materials).

- Cette fournaise à air pulsé est équipée pour utilisation avec gaz naturel et altitudes comprises entre 0 - 3,050m (0 - 10,000 pi),excepté queles fournaises de 140 taille sont pour altitudes comprises entre 0 - 2,135m (0 - 7,000pi).
- Utiliser une trousse de conversion, fournie par le fabricant, pour passer au gaz propane ou pour certaines installations au gaz naturel.
- Cette fournaise à air pulsé est pour installation à l´intérieur dans un bâtiment construit sur place. Cette fournaise à air pulse peut être installée dans une maison préfabriquée (maison mobile) si prescrit par la plaque signalétique et si'l on utilise une trousse specifiée par le fabricant.
- Cette fournaise peut être installée sur un plancher combustible dans un enfoncement ou un placard en observant les **Dégagement Minimum En Pouces Avec. Éléments De Construction Combustibles.**
- Cette fournaise nécessite un système d´évacuation spécial. La méthode d´installation et la liste des pièces nécessaires figurent dans les instructions d´installation. Cette fournaise doit s´utiliser avec la tuyauterie des nomenclatures 40 PVC, PVC-DWV, CPVC, ou ABS-DWV et elle ne peut pas être ventilée conjointment avec d´autres appareils à gaz. Épaisseur de la construction au travers de laquelle il est possible de faire passer les tuyaux d'aération (admission/évacuation): 24 po (610 mm) maximum, 3/4 po (19mm) minimum (y compris la toiture).

Furnace must be installed level, or pitched within 1/2" of level.

La fournaise doit être installée de niveau ou inclinée à pas plus de 1/2" du niveau.

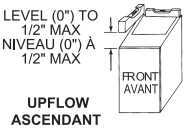

MINIMUM INCHES CLEARANCE TO COMBUSTIBLE CONSTRUCTION

* Minimum front clearance for service 24 inches (610mm).

DÉGAGEMENT MINIMUM EN POUCES AVEC ÉLÉMENTS DE CONSTRUCTION COMBUSTIBLES

* Dégagement avant minimum de 24 po (610mm) pour l'entretien.

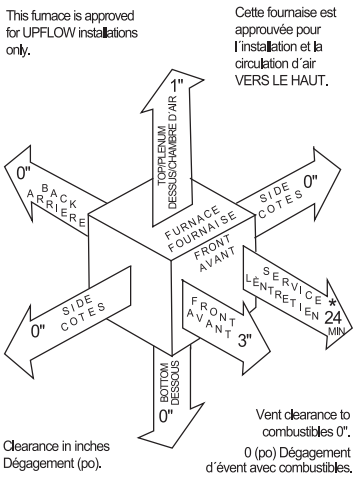

332713-201 REV. B (LIT.TOP)

A09681

Fig. 3 - Clearance to Combustibles

If this furnace is installed with a direct-vent (combustion air and flue) system, a factory accessory termination kit must be installed. In a direct-vent system, all air for combustion is taken directly from the outside atmosphere and all flue products are discharged to the outside atmosphere. See furnace and factory accessory termination kit instructions for proper installation.

These furnaces are shipped with the following materials to assist in proper furnace installation. These materials are shipped in the main blower compartment.

Installer Packet Includes:	
Installation, Startup, and Operating Instructions	
Service and Maintenance Instructions	
User's Information Manual	
Warranty Certificate	
Loose Parts Bag includes:	**Quantity**
Collector Box or Condensate trap extension tube	1
Inducer housing drain tube	1
1/2-in CPVC street elbow	2
Drain tube coupling	1
Drain tube coupling grommet	1
Gas line grommet	1
Vent pipe grommet	1
Combustion-air pipe grommet	1
Gas line entry hole filler plug	1
Power entry hole filler plug	2
Condensate trap hole filler plug	3
Vent and combustion-air intake hole filler plug	2
Combustion-air pipe perforated disk assembly	1

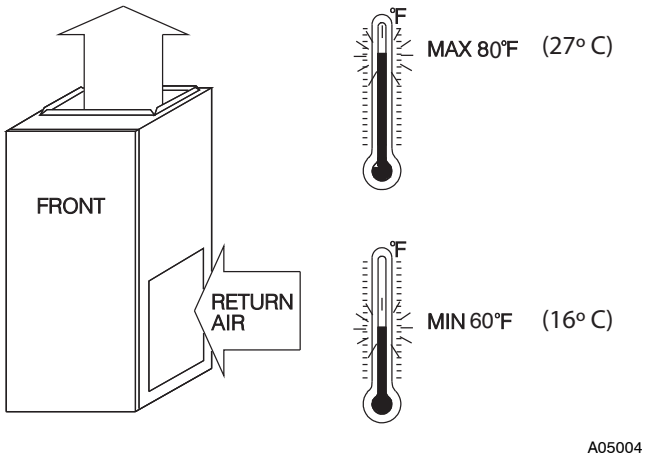

Fig. 4 - Return-Air Temperature

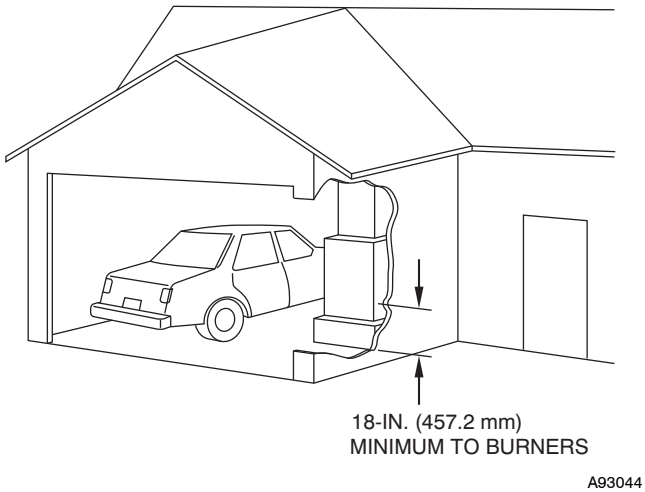

Fig. 5 - Installation in a Garage

The furnace shall be installed so that the electrical components are protected from water.

For accessory installation details, refer to applicable installation literature.

CODES AND STANDARDS

Follow all national and local codes and standards in addition to these instructions. The installation must comply with regulations of the serving gas supplier, local building, heating, plumbing, and other codes. In absence of local codes, the installation must comply with the national codes listed below and all authorities having jurisdiction in Canada.

In the United States and Canada, follow all codes and standards for the following:

Safety

- US: National Fuel Gas Code (NFGC) NFPA 54/ANSI Z223.1 and the Installation Standards, Warm Air Heating and Air Conditioning Systems ANSI/NFPA 90B
- CANADA: National Standard of Canada, Natural Gas and Propane Installation Code (NSCNGPIC) CSA B149.1

General Installation

- US: NFGC and the NFPA 90B. For copies, contact the National Fire Protection Association Inc., Batterymarch Park, Quincy, MA 02269; or for only the NFGC contact the American Gas Association, 400 N. Capitol, N.W., Washington DC 20001
- CANADA: NSCNGPIC. For a copy, contact Standard Sales, CSA International, 178 Rexdale Boulevard, Etobicoke (Toronto), Ontario, M9W 1R3, Canada.

Combustion and Ventilation Air

- US: Section 9.3 of the National Fuel Gas Code NFPA 54/ANSI Z223.1-2009, Air for Combustion and Ventilation
- CANADA: Part 8 of the NSCNGPIC, Venting Systems and Air Supply for Appliances

Duct Systems

- US and CANADA: Air Conditioning Contractors Association (ACCA) Manual D, Sheet Metal and Air Conditioning Contractors National Association (SMACNA), or American Society of Heating, Refrigeration, and Air Conditioning Engineers (ASHRAE) 2005 Fundamentals Handbook Chapter 35.

Acoustical Lining and Fibrous Glass Duct

- US and CANADA: current edition of SMACNA, NFPA 90B as tested by UL Standard 181 for Class I Rigid Air Ducts

Gas Piping and Gas Pipe Pressure Testing

- US: National Fuel Gas Code NFPA 54/ANSI Z223.1-2009 Chapters 5,6,7, and 8 and national plumbing codes
- CANADA: CAN/CSA B149.1-05 Parts 4,5,6, and 9.

In the state of Massachusetts:

- This product must be installed by a licensed plumber or gas fitter.
- When flexible connectors are used, the maximum length shall not exceed 36 inches.
- When lever type gas shutoffs are used they shall be T-handle type.
- The use of copper tubing for gas piping is not approved by the state of Massachusetts.

Electrical Connections

- US: National Electrical Code (NEC) ANSI/NFPA 70
- CANADA: Canadian Electrical Code CSA C22.1

ELECTROSTATIC DISCHARGE (ESD) PRECAUTIONS

⚠ CAUTION

UNIT DAMAGE HAZARD

Failure to follow this caution may result in damage to unit components.

Electrostatic discharge can affect electronic components. Take precautions during furnace installation and servicing to protect the furnace electronic control. Precautions will prevent electrostatic discharges from personnel and hand tools which are held during the procedure. These precautions will help to avoid exposing the control to electrostatic discharge by putting the furnace, the control, and the person at the same electrostatic potential.

3. Disconnect all power to the furnace. Multiple disconnects may be required. DO NOT TOUCH THE CONTROL OR ANY WIRE CONNECTED TO THE CONTROL PRIOR TO DISCHARGING YOUR BODY'S ELECTROSTATIC CHARGE TO GROUND.
4. Firmly touch a clean, unpainted, metal surface of the furnace chassis which is close to the control. Tools held in a person's hand during grounding will be satisfactorily discharged.
5. After touching the chassis, you may proceed to service the control or connecting wires as long as you do nothing that recharges your body with static electricity (for example; DO NOT move or shuffle your feet, DO NOT touch ungrounded objects, etc.).
6. If you touch ungrounded objects (recharge your body with static electricity), firmly touch furnace again before touching control or wires.
7. Use this procedure for installed and uninstalled (ungrounded) furnaces.
8. Before removing a new control from its container, discharge your body's electrostatic charge to ground to protect the control from damage. If the control is to be installed in a furnace, follow items 1 through 5 before bringing the control or yourself into contact with the furnace. Put all used AND new controls into containers before touching ungrounded objects.
9. An ESD service kit (available from commercial sources) may also be used to prevent ESD damage.

INTRODUCTION

The model 58UVB Direct Vent, Upflow, Gas-Fired, Category IV, condensing furnace is available in model sizes ranging in input capacities of 60,000 to 120,000 Btuh.

APPLICATIONS

General

Some assembly and modifications are required for condensate trap drainage tubes. (See Fig. 6, 7 and 8.) All drain and pressure tubes are connected as shown in Fig. 7 from the factory. See appropriate application instructions for these procedures.

⚠ CAUTION

MINOR PROPERTY DAMAGE

Failure to follow this caution may result in minor property damage.

Local codes may require a drain pan under entire furnace and condensate trap when a condensing furnace is used in an attic application or over a finished ceiling.

NOTE: In Canada, installations shall be in accordance with current NSCNGPIC and/or local codes.

Upflow Application Only

An upflow furnace application is where furnace blower is located below combustion and controls section of furnace, and conditioned air is discharged upwards.

Condensate Trap (Factory-Shipped location)

The condensate trap is factory installed in the blower shelf. A factory-supplied tube is used to extend the condensate trap drain connection to the desired furnace side for field drain attachment. See Condensate Trap Tubing section for drain tube extension details. (See Fig. 6.)

Condensate Trap Tubing (Factory-Shipped configuration)

NOTE: See Fig. 7 or review label on main furnace door to confirm location of these tubes.

1. Collector Box Drain, Inducer Housing Drain, Relief Port, and Pressure Switch Tubes
   These tubes should be factory attached to condensate trap and pressure switch ready for use in internal trap applications. These tubes can be identified by their connection location and also by a color label on each tube. These tubes are identified as follows: collector box drain tube (blue label), inducer housing drain tube (violet label or molded), relief port tube (green label), and pressure switch tube (pink label).
2. Condensate Trap Drain Tube
   The condensate trap drain connection must be extended for field attachment by doing the following:
   f. Determine location of field drain connection. (See Fig. 2 or 7.)

NOTE: If internal filter or side filter/media cabinet is used, drain tube should be located to opposite side of casing from return duct attachment to assist in filter removal.

   g. Remove and discard casing drain hole plug button from desired side.
   h. Install drain tube coupling grommet (factory-supplied in loose parts bag) in selected casing hole.
   i. Slide drain tube coupling (factory-supplied in loose parts bag) through grommet so long end of coupling faces blower.
   j. Cement 2 factory-supplied 1/2-in. street CPVC elbows to rigid drain tube connection on condensate trap. (See Fig. 7.) These elbows must be cemented together and cemented to condensate trap drain connection.

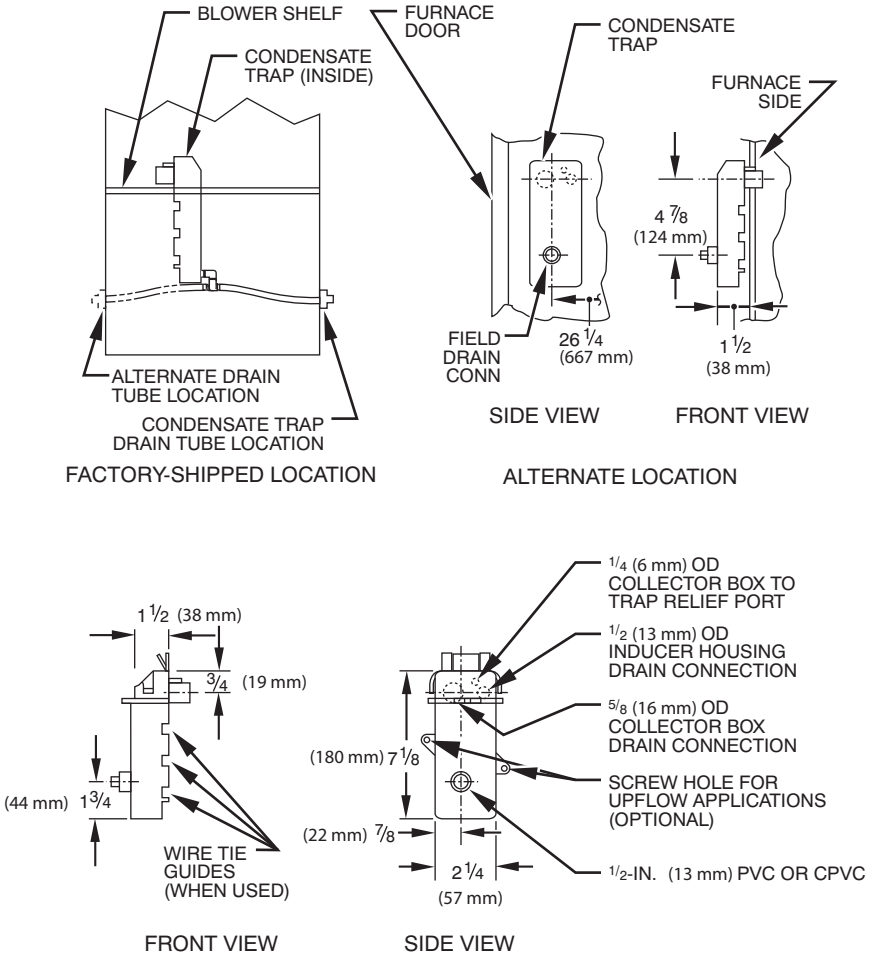

Fig. 6 - Condensate Trap

NOTE: Failure to use CPVC elbows may allow drain to kink, preventing draining.

k. Connect larger diameter drain tube and clamp (factory-supplied in loose parts bag) to condensate trap and clamp securely.

l. Route tube to coupling and cut to appropriate length.

m. Attach tube to coupling and clamp securely.

Condensate Trap(Alternate location)

An alternate location for the condensate trap is the left-hand side of casing. (See Fig. 2 and 8.)

NOTE: If the alternate left-hand side of casing location is used, the factory-connected drain and relief port tubes must be disconnected and modified for attachment. See Condensate Trap Tubing (Alternate Configuration) section for tubing attachment.

To relocate condensate trap to the left-hand side, perform the following:

1. Remove 3 tubes connected to condensate trap.
2. Remove trap from blower shelf by gently pushing tabs inward and rotating trap.
3. Install casing hole filler cap (factory-supplied in loose parts bag) into blower shelf hole where trap was removed.

⚠ WARNING

CARBON MONOXIDE POISONING HAZARD

Failure to follow this warning could result in personal injury or death.

Casing hole filler cap must be installed in blower shelf hole when condensate trap is relocated to prevent combustion products being drawn in from appliances in the equipment room.

4. Install condensate trap into left-hand casing hole by inserting the top two outer tabs into casing hole, while making sure that the larger center tab is on the outside of the casing. Push the condensate trap up as far as possible and then rotate the connection stubs through the hole. Slide the condensate trap downwards to secure it in the casing hole.
5. Fill unused condensate trap casing holes with plastic filler caps (factory-supplied in loose parts bag).

Condensate Trap Tubing (Alternate Configuration)

NOTE: See Fig. 8 or tube routing label on main furnace door to confirm location of these tubes.

1. Collector Box Drain Tube
   Connect collector box drain tube (blue label) to condensate trap.

NOTE: On 17-1/2-in. (445 mm) wide furnaces ONLY, cut tube between corrugated sections to prevent kinks.

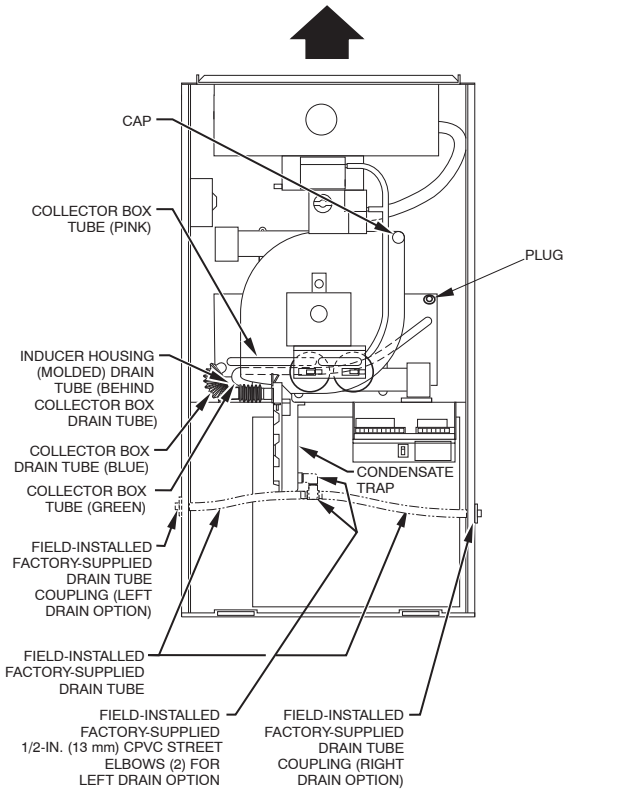

Fig. 7 - Factory-Shipped Trap Location (Shown with Blower Access Panel Removed)

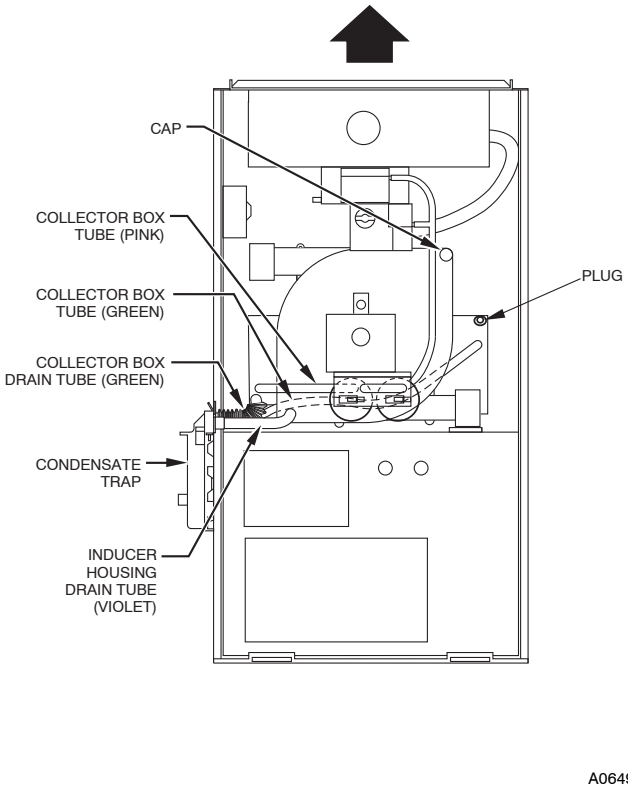

Fig. 8 - Alternate Trap Location

2. Inducer Housing Drain Tube
   a. Remove and discard LOWER (molded) inducer housing drain tube which was previously connected to condensate trap.
   b. Use inducer housing drain extension tube (violet label and factory-supplied in loose parts bag) to connect LOWER inducer housing drain connection to condensate trap.
   c. Determine appropriate length, then cut and connect tube.
   d. Clamp tube to prevent any condensate leakage.
3. Relief Port Tube
   a. Connect relief port tube (green label) to condensate trap.
   b. Determine appropriate length, then cut and connect tube.

Condensate Trap Field Drain Attachment

Refer to Condensate Drain section for recommendations and procedures.

Pressure Switch Tubing

The LOWER collector box pressure tube (pink label) is factory connected to the pressure switch and should not require any modification.

NOTE: See Fig. 7 or 8 or tube routing label on main furnace door to check for proper connections.

Upper Collector Box and Inducer Housing (Unused) Drain Connections

Upper Collector Box Drain Connection

Attached to the UPPER collector box drain connection is a factory-installed plug. This plug prevents condensate leakage in this application. Ensure this plug is secure.

NOTE: See Fig. 7 or 8 or tube routing label on main furnace door to check for proper connections.

Upper Inducer Housing Drain Connection

Attached to the UPPER (unused) inducer housing drain connection is a cap and clamp. This cap is used to prevent condensate leakage in this application. Ensure this connection is capped.

NOTE: See Fig. 7 or 8 or tube routing label on main furnace door to check for proper connections.

Condensate Trap Freeze Protection

Refer to Condensate Drain Protection section for recommendations and procedures.

Condensate Trap Field Drain Attachment

Refer to Condensate Drain section for recommendations and procedures.

LOCATION

General

This furnace must

- be installed in upflow position ONLY
- be installed so the electrical components are protected from water.
- not be installed directly on any combustible material other than wood flooring (refer to SAFETY CONSIDERATIONS).
- be located so combustion-air and vent pipe maximum lengths are not exceeded. Refer to Table 8.
- be located where available electric power and gas supplies meet specifications on the furnace rating plate.
- be attached to an air distribution system and be located as close to the center of the distribution system as possible. Refer to Air Ducts section.

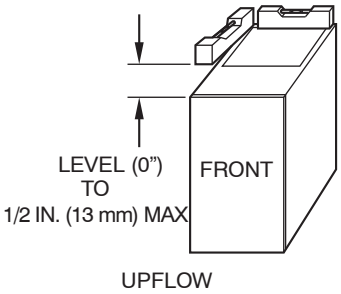

Fig. 9 - Proper Condensate Drainage

- be provided with ample space for servicing and cleaning.

  Always comply with minimum fire protection clearances shown on the furnace clearance-to-combustibles label. (See Fig. 3.)

This furnace may be located in a confined space without special provisions for dilution or ventilation air.

NOTE: Install furnace so that it is level or pitched forward within 1/2-in. (13 mm) for proper furnace operation. (See Fig. 9.)

When a furnace is installed so that supply ducts carry air circulated by the furnace to areas outside the space containing the furnace, the return air shall also be handled by ducts sealed to furnace casing. The ducts terminate outside the space containing the furnace to ensure there will not be a negative pressure condition within equipment room or space.

⚠ WARNING

FIRE, INJURY OR DEATH HAZARD

Failure to follow this warning could result in fire, property damage, personal injury, or death.

Do **not** install furnace on its back. (See Fig. 10.) Safety control operation will be adversely affected. Never connect return-air ducts to back of furnace.

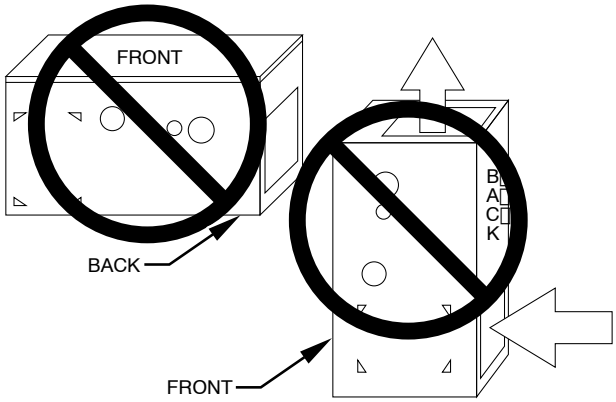

Fig. 10 - Prohibit Installation on Back

⚠ CAUTION

UNIT DAMAGE HAZARD

This gas furnace may be used for construction heat provided that:

-The furnace is permanently installed with all electrical wiring, piping, air filters, venting and ducting installed according to these installation instructions. A return air duct is provided, sealed to the furnace casing, and terminated outside the space containing the furnace. This prevents a negative pressure condition as created by the circulating air blower, causing a flame rollout and/or drawing combustion products into the structure.

-The furnace is controlled by a thermostat. It may not be "hot wired" to provide heat continuously to the structure without thermostatic control.

-Clean outside air is provided for combustion. This is to minimize the corrosive effects of adhesives, sealers and other construction materials. It also prevents the entrainment of drywall dust into combustion air, which can cause fouling and plugging of furnace components.

-The temperature of the return air to the furnace is maintained between 55°F (13°C) and 80°F (27°C), with no evening setback or shutdown. The use of the furnace while the structure is under construction is deemed to be intermittent operation per our installation instructions.

-The air temperature rise is within the rated rise range on the furnace rating plate, and the firing rate has been set to the nameplate value.

-The filters used to clean the circulating air during the construction process must be either changed or thoroughly cleaned prior to occupancy.

-The furnace, ductwork and filters are cleaned as necessary to remove drywall dust and construction debris from all HVAC system components after construction is completed.

-After construction is complete, verify furnace operating conditions including ignition, input rate, temperature rise and venting, according to the manufacturer's instructions.

The furnace and its return air system shall be designed and installed so that negative pressure created by the air circulating fan cannot affect another appliance's combustion air supply or act to mix products of combustion with circulating air, and that the air circulating fan of the furnace, if installed in an enclosure communicating with another fuel-burning appliance not of the direct-vent type, shall be operable only when any door or panel covering an opening in the furnace fan compartment or in a return air plenum on ducts is in the closed position.

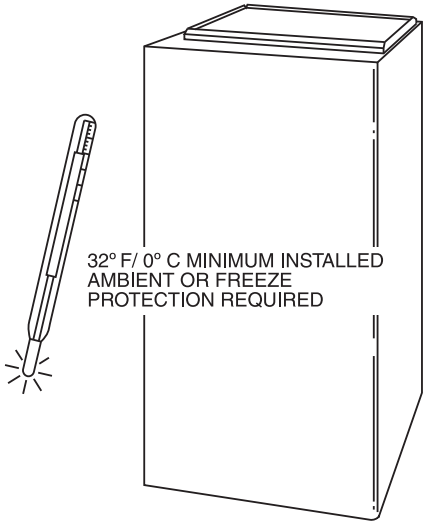

Fig. 11 - Freeze Protection

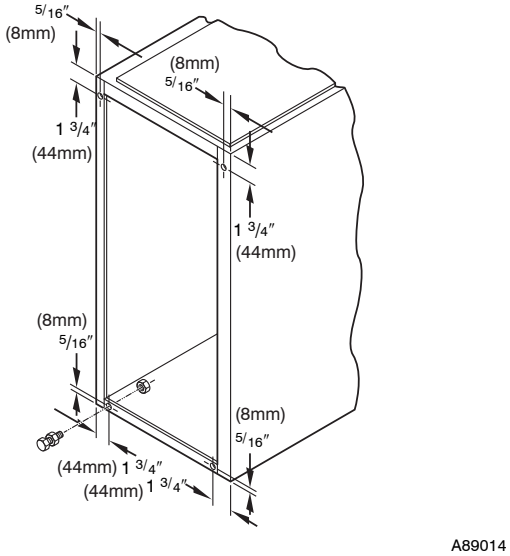

Fig. 12 - Leveling Legs

⚠ CAUTION

UNIT DAMAGE HAZARD

Failure to follow this caution may result in minor property or unit damage.

If these furnaces are installed in an unconditioned space where ambient temperatures may be 32°F (0°C)or lower, freeze protection measures must be taken. See Condensate Drain Protection section and Fig. 11.

Low-Heat Only Installation

This 58UVB furnace can be installed to operate in the low-heat only heating mode when sized using the low-heat heating capacity. This is accomplished by placing setup switch SW1-2 in the ON position to provide only low-heat operation. See Fig. 33 and Table 9. With this setup, high-heat operation will not occur.

⚠ CAUTION

UNIT DAMAGE HAZARD

Failure to follow this caution may result in minor property or unit damage.

The furnace can operate in the high-heat mode when certain fault conditions occur. The following precautions should be taken:
1. Size gas piping based on the high-heat input.
2. Check the high-heat input and adjust it per the main literature instructions.

Furnace Location Relative to Cooling Equipment

The cooling coil must be installed parallel with or on downstream side of furnace to avoid condensation in heat exchanger. When installed parallel with a furnace, dampers or other means used to control flow of air shall be adequate to prevent chilled air from entering furnace. If dampers are manually operated, they must be equipped with a means to prevent operation of either unit unless damper is in full-heat or full-cool position.

Hazardous Locations

⚠ WARNING

FIRE, EXPLOSION, INJURY OR DEATH HAZARD

Improper location or inadequate protection could result in fire or explosion.

When furnace is installed in a residential garage, it must be installed so that burners and ignition sources are located a minimum of 18 in. (457 mm) above floor. The furnace must be located or protected to avoid physical damage by vehicles. When furnace is installed in a public garage, airplane hangar, or other building having a hazardous atmosphere, unit must be installed in accordance with requirements of National Fire Protection Association, Inc. (See Fig. 5.)

INSTALLATION

Leveling Legs (If Desired)

When furnace is used in upflow position with side inlet(s), leveling legs may be desired. (See Fig. 12.) Install field-supplied, corrosion-resistant 5/16-in. machine bolts and nuts.

NOTE: The maximum length of bolt should not exceed 1-1/2 in.

1. Position furnace on its back. Locate and drill a 5/16-in. diameter hole in each bottom corner of furnace. (See Fig. 12.) Holes in bottom closure panel may be used as guide locations.
2. For each hole, install nut on bolt and then install bolt and nut in hole. (Install flat washer if desired.)
3. Install another nut on other side of furnace base. (Install flat washer if desired.)
4. Adjust outside nut to provide desired height, and tighten inside nut to secure arrangement.

NOTE: Bottom closure must be used when leveling legs are used. See Bottom Closure Panel section.

Installation

1. Construct hole in floor per dimensions specified in Fig. 13 and Table 1.
2. Construct plenum to dimensions specified in Fig. 13 and Table 1.

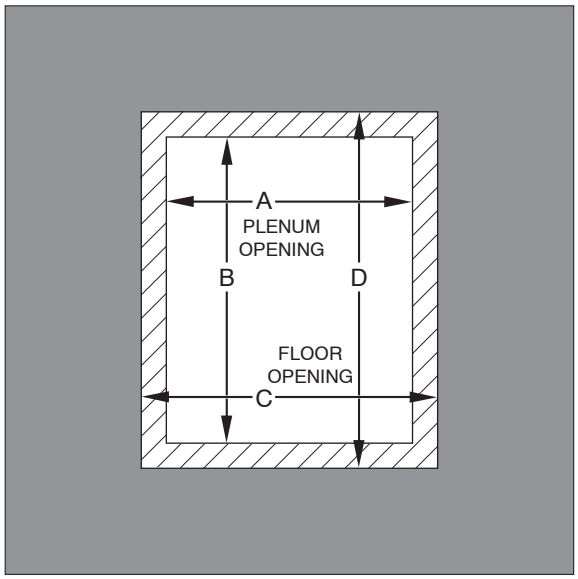

A96283

Fig. 13 - Floor and Plenum Opening Dimensions

Table 1 – Opening Dimensions - In. (mm)

FURNACE CASING WIDTH	PLENUM OPENING		FLOOR OPENING	
	A	B	C	D
17–1/2 (445)	16 (406)	24–1/8 (613)	16–5/8 (422)	24–3/4 (629)
21 (533)	19–1/2 (495)	24–1/8 (613)	20–1/8 (511)	24–3/4 (629)
24–1/2 (622)	23 (584)	24–1/8 (613)	23–5/8 (600)	24–3/4 (629)

Air Ducts

General Requirements

The duct system should be designed and sized according to accepted national standards such as those published by: Air Conditioning Contractors Association (ACCA), Sheet Metal and Air Conditioning Contractors National Association (SMACNA) or American Society of Heating, Refrigerating and Air Conditioning Engineers (ASHRAE) or consult *The Air Systems Design Guidelines* reference tables available from your local distributor. The duct system should be sized to handle the required system design CFM at the design static pressure.

When a furnace is installed so that the supply ducts carry air circulated by the furnace to areas outside the space containing the furnace, the return air must also be handled by a duct(s) sealed to the furnace casing and terminating outside the space containing the furnace.

Secure ductwork with proper fasteners for type of ductwork used. Seal supply- and return-duct connections to furnace with code approved tape or duct sealer.

Flexible connections should be used between ductwork and furnace to prevent transmission of vibration. Ductwork passing through unconditioned space should be insulated to enhance system performance. When air conditioning is used, a vapor barrier is recommended.

Maintain a 1-in. (25 mm) clearance from combustible materials to supply air ductwork for a distance of 36 in. (914 mm) horizontally from the furnace. See NFPA 90B or local code for further requirements.

For a furnace not equipped with a cooling coil, the outlet duct shall be provided with a removable access panel. This opening shall be accessible when the furnace is installed and shall be of such a size that the heat exchanger can be viewed for possible openings using light assistance or a probe can be inserted for sampling the air stream. The cover attachment shall prevent leaks.

Ductwork Acoustical Treatment

Metal duct systems that do not have a 90 degree elbow and 10 ft. (3.0 M) of main duct to the first branch take-off may require internal acoustical lining. As an alternative, fibrous ductwork may be used if constructed and installed in accordance with the latest edition of SMACNA construction standard on fibrous glass ducts. Both acoustical lining and fibrous ductwork shall comply with NFPA 90B as tested by UL Standard 181 for Class 1 Rigid air ducts.

Supply Air Connections

Connect supply-air duct to 3/4-in. flange on furnace supply-air outlet. The supply-air duct attachment must ONLY be connected to furnace supply-/outlet-air duct flanges or air conditioning coil casing (when used). DO NOT cut main furnace casing to attach supply side air duct, humidifier, or other accessories. All accessories MUST be connected external to furnace main casing.

Return Air Connections

⚠ WARNING

FIRE HAZARD

Failure to follow this warning could result in fire, personal injury, or death.

Never connect return-air ducts to the back of the furnace.

The return-air duct must be connected to bottom, sides (left or right), or a combination of bottom and side(s) of main furnace casing. Bypass humidifier may be attached into unused side return air portion of the furnace casing. DO NOT connect any portion of return-air duct to back of furnace casing.

Filter Arrangement

⚠ WARNING

FIRE, CARBON MONOXIDE AND POISONING HAZARD

Failure to follow this warning could result in fire, personal injury or death.

Never operate unit without a filter or with filter access door removed.

The air filter arrangement will vary due to return air configuration and filter type. The filter may be installed in an external Filter/Media cabinet (if provided) or the furnace blower compartment. Factory supplied washable filters are shipped in the blower compartment.

If a factory-supplied external Filter/Media cabinet is provided, instructions for its application, assembly, and installation are packaged with the cabinet. The Filter/Media cabinet can be used with the factory-supplied washable filter or a factory-specified high-efficiency disposable filter (see cabinet instructions).

If installing the filter in the furnace blower compartment, determine location for filter and relocate filter retaining wire, if necessary. See Table 2 to determine correct filter size for desired filter location. Table 2 indicates filter size, location, and quantity shipped with this furnace. See Fig. 2 for location and size of bottom and side return-air openings.

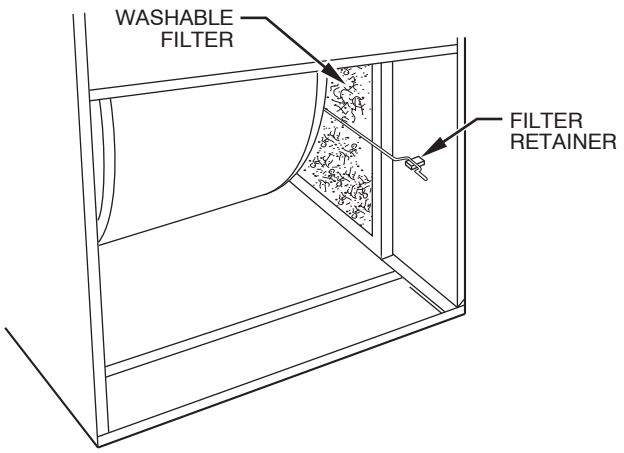

A93045

Fig. 14 - Filter Installed for Side Inlet

⚠ CAUTION

CUT HAZARD

Failure to follow this caution may result in minor personal injury.

Use care when cutting support rods in filters to protect against flying pieces and sharp rod ends. Wear safety glasses, gloves, and appropriate protective clothing.

Table 2 – Filter Information - In. (mm)

AIR FILTER LOCATED IN BLOWER COMPARTMENT			
Furnace Casing Width	Filter Size		Filter Type Framed
	Side Return	Bottom Return*	
17–1/2 (445)	(1) 16 x 25 x 3/4 † (406 x 635 x 19)	(1) 16 x 25 x 3/4† (406 x 635 x 19)	Washable
21 (533)	(1) 16 x 25 x 3/4* (406 x 635 x 19)	(1) 20 x 25 x 3/4† (508 x 635 x 19)	Washable
24–1/2 (622)	(1 or 2) 16 x 25 x 3/4* (406 x 635 x 19)	(1) 24 x 25 x 3/4† (610 x 635 x 19)	Washable

* Filters may be field modified by cutting filter material and support rods (3) in filters. Alternate sizes can be ordered from your distributor or dealer

† Factory–provided with the furnace

⚠ CAUTION

UNIT MAY NOT OPERATE

Failure to follow this caution may result in intermittent unit operation or performance satisfaction.

For airflow requirements above 1800 CFM, see Air Delivery table in Product Data literature for specific use of single side inlets. The use of both side inlets, a combination of 1 side and the bottom, or the bottom only will ensure adequate return air openings for airflow requirements above 1800 CFM.

NOTE: Side return-air openings can be used for return air connections. Install filter(s) as shown in Fig. 14.

For bottom return-air applications, filter may need to be cut to fit some furnace widths. Install filter as shown in Fig. 15.

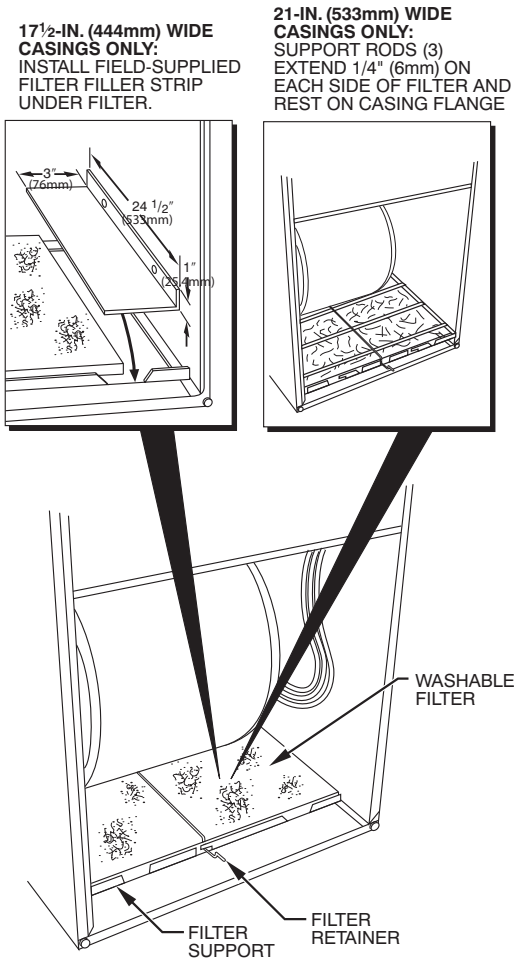

A00290

Fig. 15 - Bottom Filter Arrangement

NOTE: Remove and discard bottom closure panel when bottom inlet is used.

Bottom Closure Panel

These furnaces are shipped with bottom closure panel installed in bottom return-air opening. This panel MUST be in place when side return air is used.

To remove bottom closure panel, perform following:

1. Tilt or raise furnace and remove 2 screws holding front filler panel. (See Fig. 16.)
2. Rotate front filler panel downward to release holding tabs.
3. Remove bottom closure panel.
4. Reinstall front filler panel and screws.

Gas Piping

Gas piping must be installed in accordance with national and local codes. Refer to NFGC in the U.S. Canadian installations must be made in accordance with NSCNGPIC and all authorities having jurisdiction. Gas supply line should be a separate line running directly from meter to furnace, if possible. Refer to Table 3 for recommended gas pipe sizing. Risers must be used to connect to furnace and to meter. Support all gas piping with appropriate straps, hangers, etc. Use a minimum of 1 hanger every 6 ft. (1.8 M). Joint compound (pipe dope) should be applied sparingly and only to male threads of joints. Pipe dope must be resistant to propane gas.

⚠ WARNING

FIRE OR EXPLOSION HAZARD

Failure to follow this warning could result in fire, explosion, personal injury, or death.

- Connect gas pipe to furnace using a backup wrench to avoid damaging gas controls.
- Gas valve shutoff switch MUST be facing forward or tilted upward.
- Never purge a gas line into a combustion chamber. Never test for gas leaks with an open flame. Use a commercially available soap solution made specifically for the detection of leaks to check all connections.
- Use proper length of pipe to avoid stress on gas control manifold.
- If a flexible connector is required or allowed by authority having jurisdiction, black iron pipe shall be installed at furnace gas valve and extend a minimum of 2 in. (51 mm) outside furnace casing.
- Protect gas valve from water and debris. Gas valve inlet and/or inlet piping must remain capped until gas supply line is permanently installed to protect the valve from moisture and debris. Also, install a sediment trap in the gas supply piping at the inlet to the gas valve.

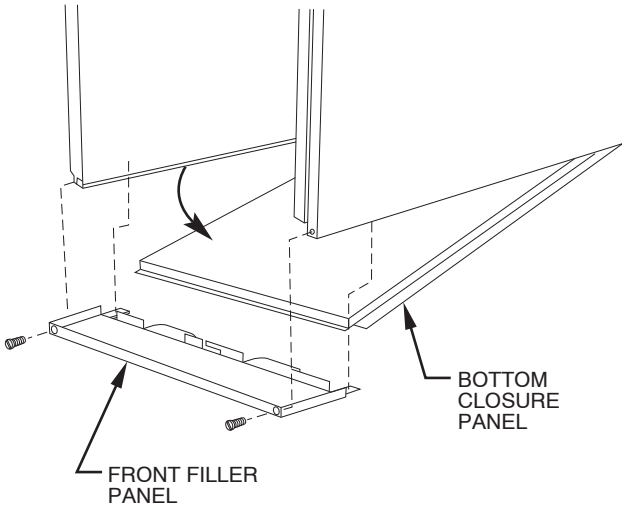

A93047

Fig. 16 - Removing Bottom Closure Panel

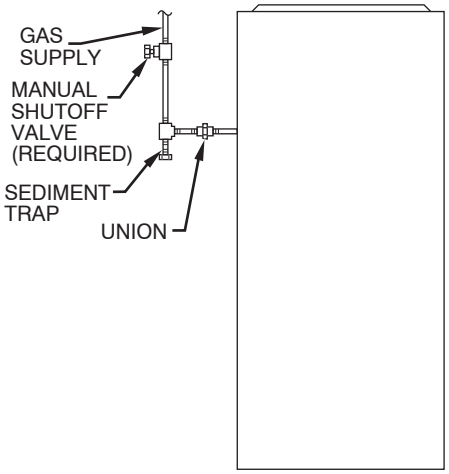

A93324

Fig. 17 - Typical Gas Pipe Arrangement

Install a sediment trap in riser leading to furnace. Trap can be installed by connecting a tee to riser leading to furnace so straight-through section of tee is vertical. Then connect a capped nipple into lower end of tee. Capped nipple should extend below level of gas controls. Place a ground joint union between gas control manifold and manual gas shutoff valve. (See Fig. 17.)

An accessible manual shutoff valve MUST be installed external to furnace casing and within 6 ft. (1.8 M) of furnace. A 1/8 in. (3 mm). NPT plugged tapping, accessible for test gauge connection, MUST be installed immediately upstream of gas supply connection to furnace and downstream of manual shutoff valve.

Gas line grommet (factory-supplied loose parts bag) should be used when installing gas piping. Gas line entry hole filler plug should be installed in unused gas line entry hole. (See Fig. 18.)

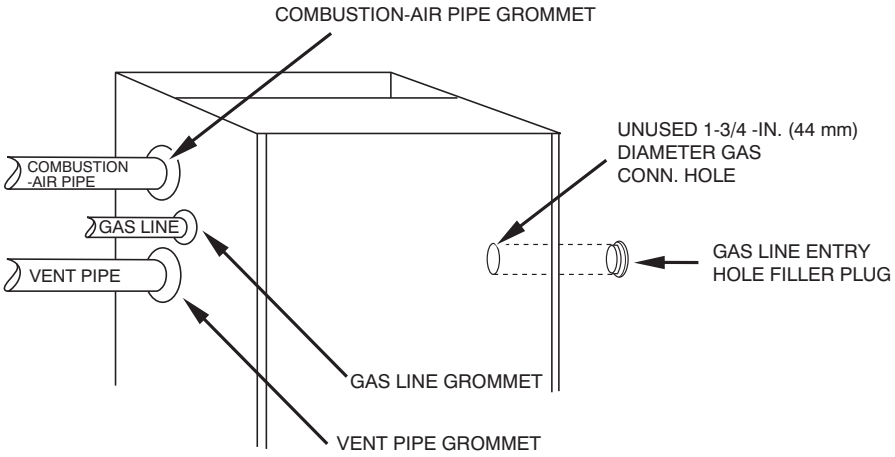

NOTE: PIPE GROMMETS AND ENTRY HOLE FILLER PLUGS ARE INCLUDED IN FACTORY-SUPPLIED LOOSE PARTS BAG

A05057

Fig. 18 - Casing Pipe Grommets

Table 3 – Maximum Capacity of Pipe*

NOMINAL IRON PIPE SIZE IN. (MM)	INTERNAL DIA. IN. (MM)	LENGTH OF PIPE – FT (M)				
		10 (3.0)	20 (6.0)	30 (9.1)	40 (12.1)	50 (15.2)
1/2 (13)	0.622 (158)	175	120	97	82	73
3/4 (19)	0.824 (21)	360	250	200	170	151
1 (25)	1.049 (27)	680	465	375	320	285
1-1/4 (32)	1.380 (35)	1400	950	770	660	580
1-1/2 (38)	1.610 (41)	2100	1460	1180	990	900

*Cubic ft of gas per hr for gas pressures of 0.5 psig (14–in. wc) or less, and a pressure drop of 0.5–in. wc (based on a 0.60 specific gravity gas). Ref: Table 9–2 NFPA 54–2002.

NOTE: The gas valve inlet pressure tap connection is suitable to use as test gauge connection providing test pressure DOES NOT exceed maximum 0.5 psig (14-in. wc) stated on gas valve. (See Fig. 51.)

Piping should be pressure and leak tested in accordance with NFGC in the United States or NSCNGPIC in Canada, local, and national plumbing and gas codes before the furnace has been connected. If pressure exceeds 0.5 psig (14-in. wc), gas supply pipe must be disconnected from furnace and capped before pressure test.

If test pressure is equal to or less than 0.5 psig (14-in. wc), turn off electric shutoff switch located on gas valve before test. It is recommended that ground joint union be loosened before pressure testing. After all connections have been made, purge lines and check for leakage at furnace prior to placing it into service.

The gas supply pressure shall be within the maximum and minimum inlet supply pressures marked on the rating plate with the furnace burners ON at HI-HEAT and OFF.

Electrical Connections

See Fig. 19 for field wiring diagram showing typical field 115-v and 24-v wiring. Check all factory and field electrical connections for tightness.

⚠ WARNING

ELECTRICAL SHOCK HAZARD

Failure to follow this warning could result in personal injury or death.

Blower access door switch opens 115-v power to furnace control. No component operation can occur. Do not bypass or close switch with panel removed.

⚠ WARNING

UNIT MAY NOT OPERATE

Failure to follow this caution may result in intermittent unit operation.

Furnace control must be grounded for proper operation or control will lock out. Control is grounded through green/yellow wire connected to gas valve and burner box screw.

115-v Wiring

Before proceeding with electrical connections, make certain that voltage, frequency, and phase correspond to that specified on furnace rating plate. Also, check to be sure that service provided by power supply is sufficient to handle load imposed by this equipment. Refer to rating plate or Table 4 for equipment electrical specifications.

Make all electrical connections in accordance with National Electrical Code (NEC) ANSI/NFPA 70-2008 and any local codes or ordinances that might apply. For Canadian installations, all electrical connections must be made in accordance with Canadian Electrical Code CSA C22.1 or authorities having jurisdiction.

Field-supplied wiring shall conform with the limitations of 63°F (33°C) rise.

The furnace must be electrically grounded in accordance with local codes; or in the absence of local codes, with the National Electric Code ANSI/NFPA 70 and/or the Canadian Electric Code, CSA C22.1, Part I, if an external electrical source is utilized.

Use a separate branch electrical circuit containing a properly sized fuse or circuit breaker for this furnace. See Table 4 for wire size and fuse specifications. A disconnecting means must be located within sight from and readily accessible to furnace.

NOTE: Proper polarity must be maintained for 115-v wiring. If polarity is incorrect or furnace is not grounded properly, furnace control status code indicator light will flash rapidly and furnace will NOT operate.

⚠ WARNING

FIRE HAZARD

Failure to follow this warning could result in intermittent operation or performance satisfaction.

Do not connect aluminum wire between disconnect switch and furnace. Use only copper wire. (See Fig. 20.)

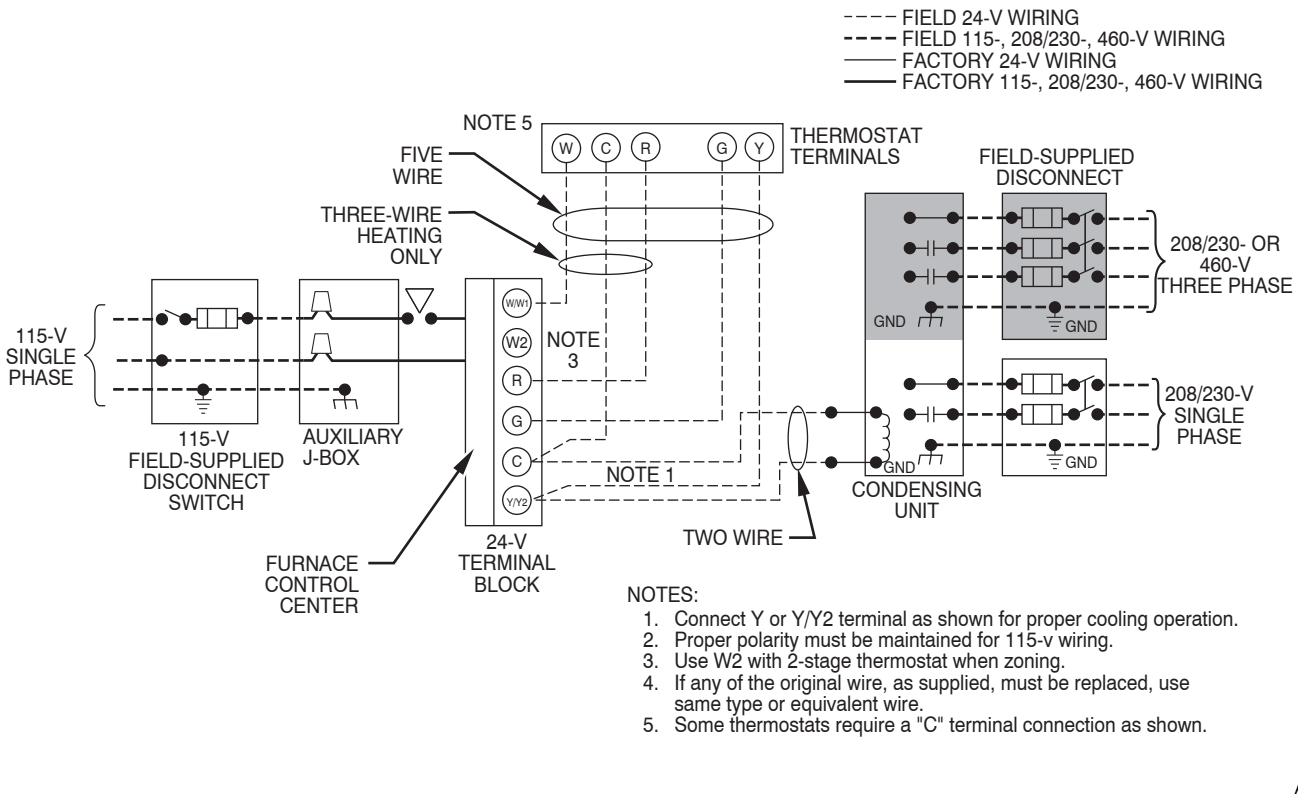

Fig. 19 - Heating and Cooling Application Wiring Diagram

Table 4 – Electrical Data

UNIT SIZE	VOLTS–HERTZ–PHASE	OPERATING VOLTAGE RANGE		MAXIMUM UNIT AMPS	MINIMUM WIRE SIZE	MAXIMUM WIRE LENGTH FT (M)‡	MAXIMUM FUSE OR CKT BKR AMPS**
		Maximum*	Minimum*				
060–14	115–60–1	127	104	8.9	14	31 (9.4)	15
080–14	115–60–1	127	104	8.9	14	31 (9.4)	15
080–20	115–60–1	127	104	13.8	12	32 (9.7)	20
100–20	115–60–1	127	104	13.8	12	32 (9.7)	20
120–20	115–60–1	127	104	13.8	12	32 (9.7)	20

* Permissible limits of voltage range at which unit will operate satisfactorily.
† Unit ampacity = 125 percent of largest operating component's full load amps plus 100 percent of all other potential operating components' (EAC, humidifier, etc.) full load amps.
‡ Length shown is as measured 1 way along wire path between unit and service panel for maximum 2 percent voltage drop.
** Time–delay type is recommended.

⚠ WARNING

ELECTRICAL SHOCK AND FIRE HAZARD

Failure to follow this warning could result in electrical shock, fire, or death.

The cabinet MUST have an uninterrupted or unbroken ground according to NEC ANSI/NFPA 70-2002 and Canadian Electrical Code CSA C22.1 or local codes to minimize personal injury if an electrical fault should occur. This may consist of electrical wire or conduit approved for electrical ground when installed in accordance with existing electrical codes. Do not use gas piping as an electrical ground.

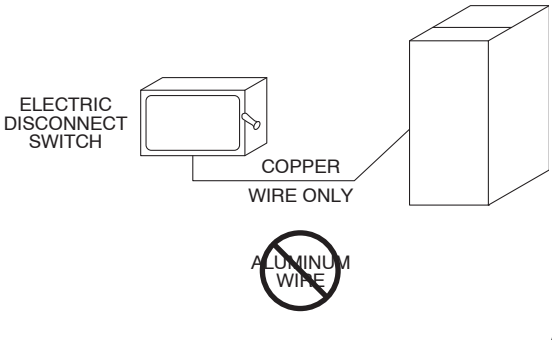

Fig. 20 - Disconnect Switch and Furnace

Factory Installed J-Box Location

Install power entry hole filler plugs (factory-supplied in loose parts bag) in unused power entry holes. (See Fig. 21.)

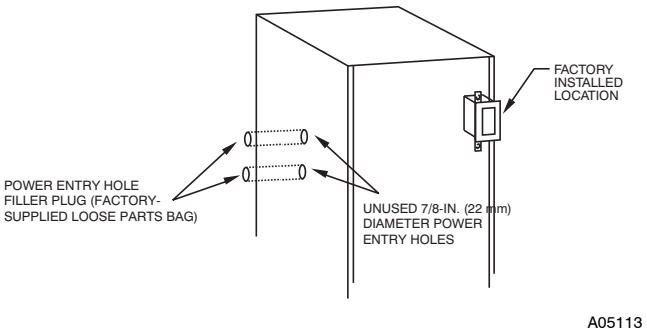

Fig. 21 - Factory Installed J-Box Location

J-Box Relocation

1. Remove 2 screws holding auxiliary J-box. (See Fig. 22.)
2. Rotate J-box 180° and attach box to left side, using holes provided.
3. Install power entry hole filler plugs (factory-supplied loose parts bag) in unused power entry holes. (See Fig. 22.)

⚠ WARNING

FIRE OR ELECTRICAL SHOCK HAZARD

Failure to follow this warning could result in intermittent unit operation or performance satisfaction.

If manual disconnect switch is to be mounted on furnace, select a location where a drill or fastener will not contact electrical or gas components.

CONTINUOUS FAN (CF) SETUP SWITCHES

The CF setup switches are used to select desired airflow when thermostat is in continuous fan mode or to select low-cooling airflow for two-speed cooling units. This setup feature allows continuous fan airflow or low-cooling airflow to be adjusted. To set desired continuous fan airflow or low-cooling airflow:

1. Remove main furnace door and blower access panel.
2. Locate CF setup switches on furnace control. (See Fig. 33.)
3. Determine desired continuous fan airflow or low-cooling airflow.
4. Use wiring schematic to determine proper setup position of CF switches. (See Fig. 23 and 39.)
5. Replace main furnace door and blower access panel.

Setup Switches (SW1)

The furnace control has 8 setup switches that may be set to meet the application requirements. Position these setup switches for the appropriate requirement.

1. Remove main furnace door and blower access panel.
2. Locate setup switches on furnace control. (See Fig. 33.)
3. See Table 9 for setup switch description.
4. Replace main furnace door and blower access panel.

NOTE: If a bypass humidifier is used, setup switch SW1-3 (Low Heat Rise Adjust) should be in ON position. This compensates for the increased temperature in return air resulting from bypass.

NOTE: If modulating dampers are used, blower motor automatically compensates for modulating dampers. If manual disconnect switch is to be mounted on furnace, select a location where a drill or fastener will not contact electrical or gas components.

24-v wiring

Make field 24-v thermostat connections at 24-v terminal block on furnace control. Y wire from thermostat MUST be connected to Y/Y2 terminal on control, as shown in Fig. 19, for proper cooling operation. The 24-v terminal block is marked for easy connection of field wiring. (See Fig. 33.) The 24-v circuit contains a 3-amp, automotive-type fuse located on furnace control. (See Fig. 33.)

Any electrical shorts of 24-v wiring during installation, service, or maintenance may cause fuse to blow. If fuse replacement is required, use only a fuse of identical size (3 amp) and type. The furnace control will flash status code 24 when fuse needs replacement.

NOTE: Use AWG No. 18 color-coded copper thermostat wire for lengths up to 100 ft. (30.4 M). For wire lengths over 100 ft. (30.4 M), use AWG No. 16 wire.

NOTE: For additional thermostat connection diagrams, reference Fig. 43-50.

Accessories

1. Electronic Air Cleaner (EAC)
   The furnace control EAC terminals are energized with 115v (1.0-amp maximum) during blower operation.
   Connect an accessory Electronic Air Cleaner (if used) using 1/4-in. female quick connect terminals to the two male 1/4-in. quick-connect terminals on the control board marked EAC-1 and EAC-2. The terminals are rated for 115VAC, 1.0 amps maximum and are energized during blower motor operation. (See Fig. 33.)

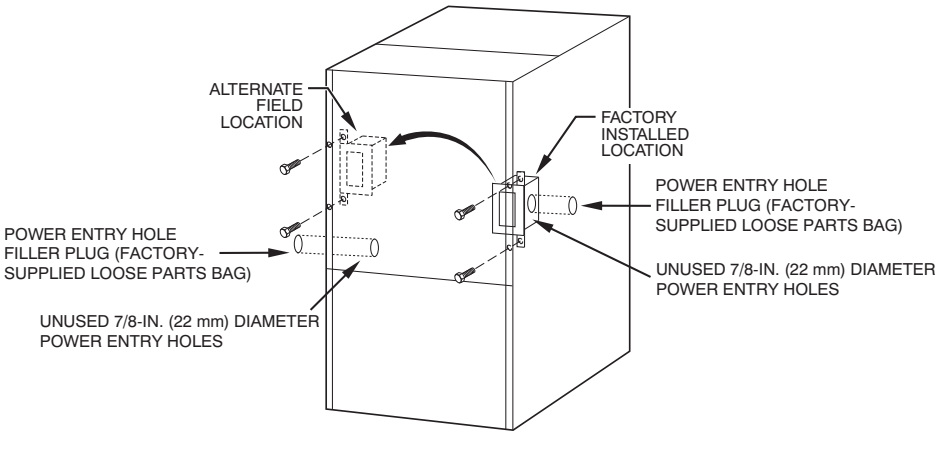

Fig. 22 - Relocating J-Box

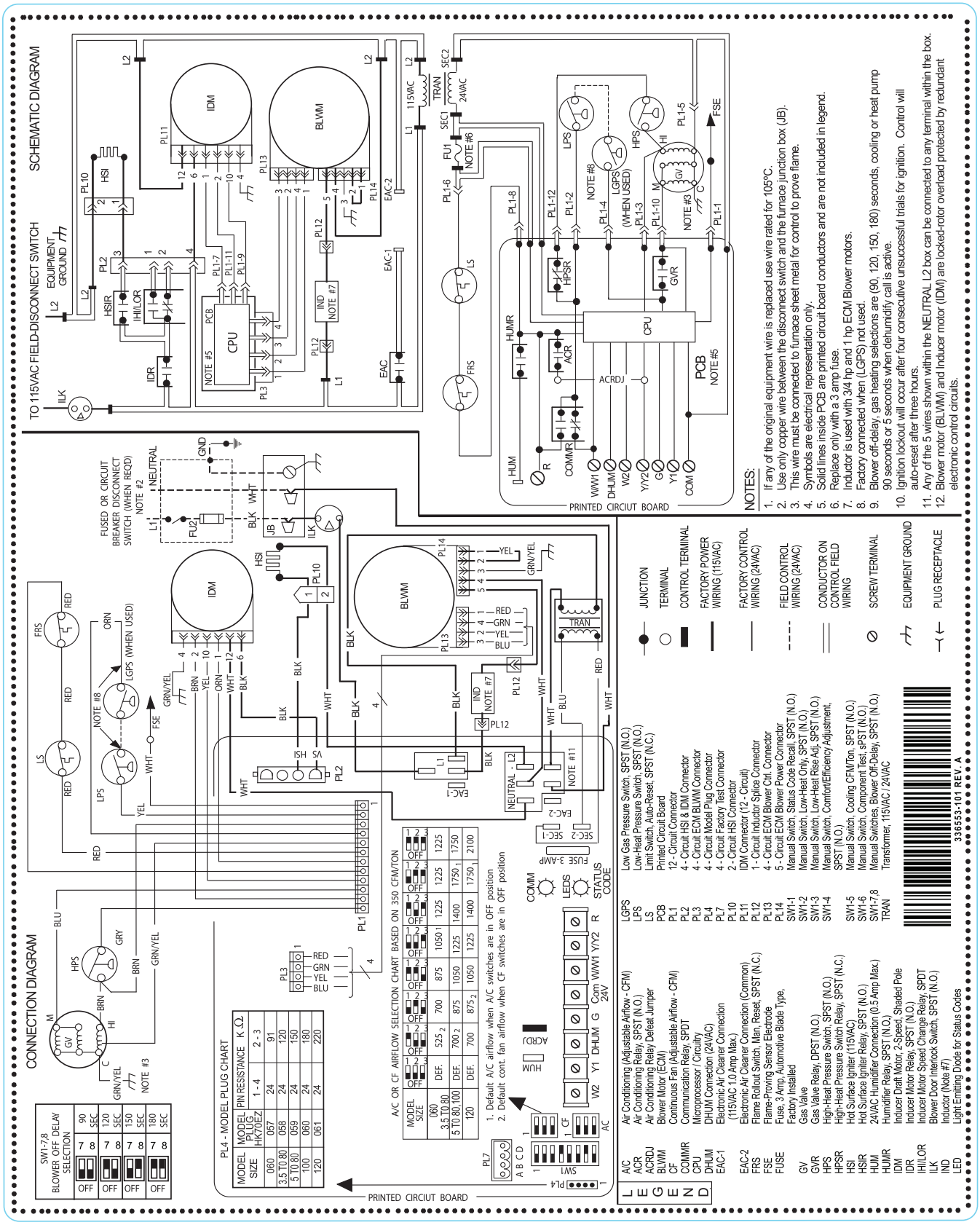

A09683

Fig. 23 - Wiring Diagram

⚠ CAUTION

UNIT DAMAGE HAZARD

Failure to follow this caution may result in unit component damage.

DO NOT connect furnace control HUM terminal to HUM (humidifier) terminal on Thermidistat™, Zone Controller or similar device. See Thermidistat™, Zone Controller, thermostat, or controller manufacturer's instructions for proper connection.

2. Humidifier (HUM)
   Connect an accessory 24 VAC, 0.5 amp maximum humidifier (if used) to the 1/4-in. male quick-connect HUM terminal and COM-24V screw terminal on the control board thermostat strip. The HUM terminal is energized when blower is energized in heating. (See Fig. 23 and 33.)

Removal of Existing Furnaces from Common Vent Systems

When an existing Category I furnace is removed or replaced, the original venting system may no longer be sized to properly vent the remaining attached appliances. An improperly sized Category I venting system could cause the formation of condensate in the furnace and vent, leakage of condensate and combustion products, spillage of combustion products into the living space, etc.

Combustion Air and Vent Pipe Systems

General

Vent system or vent connectors of other appliances may need to be resized. For any other appliances when resizing vent systems or vent connectors, system or connector must be sized to approach minimum size as determined using appropriate table found in the NFGC or NSCNGPIC.

The 58UVB can be vented as either a direct vent furnace or as an optional ventilated combustion air application. A direct vent system shall be installed in accordance with the direct vent (2-pipe) procedures in the following Combustion Air and Vent Pipe Systems section. For optional ventilated combustion air applications, refer to the ventilated combustion air option procedures in the same section. Common venting prohibited.

Direct Vent / 2-Pipe System

In a direct-vent (2-pipe) system, all air for combustion is taken directly from outdoor atmosphere, and all flue products are discharged to outdoor atmosphere. Combustion-air and vent pipes must terminate together in the same atmospheric pressure zone, either through the roof or a sidewall (roof termination preferred). A factory accessory vent termination kit MUST be used in a direct vent (2-pipe) system. See Table 6. See Fig. 34 for required clearances.

Ventilated Combustion Air Option

In a ventilated combustion air option, the vent terminates and discharges the flue products directly to the outdoors similar to a direct vent system. See Fig. 35 for required clearances. All air for combustion is piped directly to the furnace from a space that is well ventilated with outdoor air (such as an attic or crawl space) and the space is well isolated from the living space or garage.

Materials

Combustion-air and vent pipe, fittings, primers, and solvents must conform to American National Standards Institute (ANSI) standards and American Society for Testing and Materials (ASTM) standards. See Table 5 for approved materials for use in the U.S.A.

⚠ CAUTION

CARBON MONOXIDE POISONING HAZARD

Failure to follow the steps outlined below for each appliance connected to the venting system being placed into operation could result in carbon monoxide poisoning or death.

The following steps shall be followed for each appliance connected to the venting system being placed into operation, while all other appliances connected to the venting system are not in operation:

1. Seal any unused openings in venting system.
2. Inspect the venting system for proper size and horizontal pitch, as required in the *National Fuel Gas Code, ANSI Z223.1/NFPA 54* or the *CSA B149.1, Natural Gas and Propane Installation Code* and these instructions. Determine that there is no blockage or restriction, leakage, corrosion and other deficiencies, which could cause an unsafe condition.
3. As far as practical, close all building doors and windows and all doors between the space in which the appliance(s) connected to the venting system are located and other spaces of the building.
4. Close fireplace dampers.
5. Turn on clothes dryers and any appliance not connected to the venting system. Turn on any exhaust fans, such as range hoods and bathroom exhausts, so they are operating at maximum speed. Do not operate a summer exhaust fan.
6. Follow the lighting instructions. Place the appliance being inspected into operation. Adjust the thermostat so appliance is operating continuously.
7. Test for spillage from draft hood equipped appliances at the draft hood relief opening after 5 minutes of main burner operation. Use the flame of a match or candle.
8. If improper venting is observed during any of the above tests, the venting system must be corrected in accordance with the *National Fuel Gas Code, ANSI Z223.1/NFPA 54* and/or *CSA B149.1, Natural Gas and Propane Installation Code*.
9. After it has been determined that each appliance connected to the venting system properly vents when tested as outlined above, return doors, windows, exhaust fans, fireplace dampers and any other gas-fired burning appliance to their previous conditions of use.

⚠ WARNING

FIRE AND EXPLOSION HAZARD

Failure to follow this warning could result in fire, property damage, personal injury, or death.

Solvent cements are combustible. Keep away from heat, sparks, and open flame. Use only in well ventilated areas. Avoid breathing in vapor or allowing contact with skin or eyes.

For Canadian installations, refer to Page 1 for instructions.

Table 5 – Approved Combustion-Air and Vent Pipe, Fitting and Cement Materials (U.S.A Only*)

ASTM SPECIFICATION (MARKED ON MATERIAL)	MATERIAL	PIPE	FITTINGS	SOLVENT CEMENT AND PRIMERS	DESCRIPTION
D1527	ABS	Pipe	—	—	Schedule–40
D1785	PVC	Pipe	—	—	Schedule–40
D2235	For ABS	—	—	Solvent Cement	For ABS
D2241	PVC	Pipe	—	—	SDR–21 & SDR–26
D2466	PVC	—	Fittings	—	Schedule–40
D2468	ABS	—	Fittings	—	Schedule–40
D2564	For PVC	—	—	Solvent Cement	For PVC
D2661	ABS	Pipe	Fittings	—	DWV at Schedule–40 IPS sizes
D2665	PVC	Pipe	Fittings	—	DWV
F438	CPVC	—	Fittings	—	Schedule–40
F441	CPVC	Pipe	—	—	Schedule–40
F442	CPVC	Pipe	—	—	SDR
F493	For CPVC	—	—	Solvent Cement	For CPVC
F628	ABS	Pipe	—	—	Cellular Core DWV at Schedule–40 IPS sizes
F656	For PVC	—	—	Primer	For PVC
F891	PVC	Pipe	—	—	Cellular Core Schedule–40 & DWV

*Refer to Page 1 for Canadian installations.

355BAV

⚠ WARNING

CARBON MONOXIDE POISONING HAZARD

Failure to follow this warning could result in property damage, personal injury, or death.

All combustion-air and vent pipes must be airtight and watertight. Pipes must also terminate exactly as shown in Fig. 31 for direct vent (2-pipe) system or Fig. 32 for ventilated combustion air option.

An abandoned masonry chimney may be used as a raceway for properly insulated and supported combustion-air (when applicable) and vent pipes. Each furnace must have its own set of combustion-air and vent pipes and be terminated individually, as shown in Fig. 31 for Direct Vent (2-Pipe) system or Fig. 32 for ventilated combustion air option.

A furnace shall not be connected to a chimney flue serving a separate appliance designed to burn solid fuel.

Other gas appliances with their own venting system may also use the abandoned chimney as a raceway providing it is permitted by local code, the current edition of the National Fuel Gas Code and the vent or liner manufacturer's installation instructions. Care must be taken to prevent the exhaust gases from one appliance from contaminating the combustion air of other gas appliances. Do not take combustion air from inside the chimney when using the Ventilated Combustion Air option.

⚠ CAUTION

UNIT MAY NOT OPERATE

Failure to follow this caution may result in intermittent unit operation.

When vent pipe is exposed to temperatures below freezing, such as when it passes through an unheated space or when a chimney is used as a raceway, pipe must be insulated as shown in Table 7 with Armaflex-type insulation.

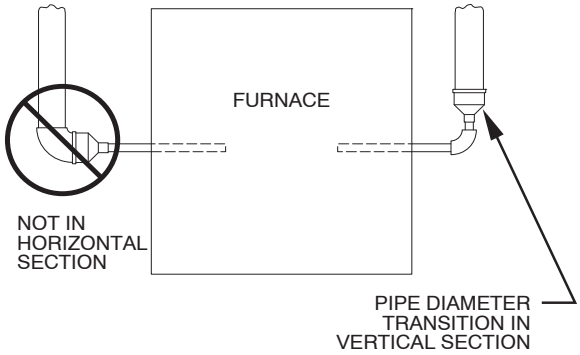

A93034

Fig. 24 - Combustion-Air and Vent Pipe Diameter Transition Location and Elbow Configuration

Furnace combustion air and vent pipe connections are sized for 2-in. pipe. Any pipe size change should be made outside furnace casing in vertical pipe. The transition has to be made as close to the furnace as reasonably possible. (See Fig. 24.)

Installation Guidelines for Combustion Air Pipe and Vent Pipe

It is recommended that all pipes be cut, prepared, and preassembled before permanently cementing any joint.

1. Attach combustion air pipe and vent pipe per instructions in sections "Combustion Air Pipe" and "Vent Pipe."
2. Working from furnace to outside, cut pipe to required length(s).
3. Deburr inside and outside of pipe.
4. Chamfer outside edge of pipe for better distribution of primer and cement.
5. Clean and dry all surfaces to be joined.
6. Check dry fit of pipe and mark insertion depth on pipe.
7. After pipes have been cut and preassembled, apply generous layer of cement primer to pipe fitting socket and end of pipe to insertion mark. Quickly apply approved cement to end of pipe and fitting socket (over primer). Apply cement in a light, uniform coat on inside of socket to prevent buildup of excess cement. Apply second coat.
8. While cement is still wet, twist pipe into socket with 1/4 turn. Be sure pipe is fully inserted into fitting socket.

9. Wipe excess cement from joint. A continuous bead of cement will be visible around perimeter of a properly made joint.
10. Handle pipe joints carefully until cement sets.
11. Horizontal portions of the venting system shall be supported to prevent sagging. Support combustion air piping (if applicable) and vent piping a minimum of every 5 ft. (1.5 M) (3 ft. (0.9 M) for SDR-21 or -26 PVC) using perforated metal hanging strap.
12. Slope combustion air piping (if applicable) and vent piping downward towards furnace a minimum of 1/4-in. (6 mm). per linear ft with no sags between hangers.
13. Horizontal portions of the venting system shall be installed so as to prevent the accumulation of condensate.
14. Use appropriate methods to seal openings where combustion air pipe (if applicable) and vent pipe pass through roof or sidewall.

Combustion-Air and Vent Pipe Diameter

Determine combustion-air and vent pipe diameter.

1. Using Table 8, individually determine the diameter of the combustion-air and vent pipe allowed. If different, pick the larger of these two diameters and use this diameter for both combustion-air and vent pipes.
2. When installing vent systems of short pipe length, use the smallest allowable pipe diameter. Do not use pipe size greater than required or incomplete combustion, flame disturbance, or flame sense lockout may occur.

NOTE: Do not count elbows or pipe sections in terminations or within furnace.

NOTE: A 2-in. (51 mm) diameter pipe must be used within furnace casing. Make all pipe diameter transitions outside furnace casing. (See Fig. 24).

⚠ CAUTION

UNIT MAY NOT OPERATE

Failure to follow this caution may result in incomplete combustion, flame disturbance, or flame sense lockout.

When installing combustion air and vent system of short pipe length, the smallest allowable pipe diameter must be used.

⚠ CAUTION

UNIT CORROSION HAZARD

Excessive exposure to contaminated combustion air may result in safety and performance related problems.
Combustion air must not be taken from inside structure because that air is frequently contaminated by halogens, which include fluorides, chlorides, bromides, and iodides. These elements are found in aerosols, detergents, bleaches, cleaning solvents, salts, air fresheners, adhesives, paint, and other household products. Locate combustion-air inlet as far as possible from swimming pool and swimming pool pump house.

EXAMPLE:

A 100,000 BTUH furnace located in Indianapolis, elevation 650 ft. (198.1 M) above sea level, could be installed as either a direct vent/2-pipe system that requires 3 elbows and 28 ft. (8.5 M) of vent pipe, along with 5 elbows and 34 ft. (10.3 M) of combustion-air pipe. Table 8 indicates this application would allow a 2-in. (51 mm) diameter vent pipe, but require a 2-1/2 in. (64 mm) diameter combustion air pipe. According to Table 8, 2-in. (51 mm) diameter pipe is good for 35 ft. (10.6 M) with 3 elbows, but only 25 ft. (7.6 M) with 5 elbows. Therefore, 2-1/2 in. (64 mm) diameter pipe must be used for both vent and combustion air pipes since larger required diameter must always be used for both pipes.
If same installations were in Albuquerque, elevation 5250 ft. (1600 M) above sea level:
Table 8 indicates that 2-1/2 in. (64 mm) diameter vent pipe and combustion-air pipe are required.
If same applications are to be installed at 5001 to 6000 ft. (1524 to 1829 M) elevation:
2-in. (51 mm) pipe is only good for 23 ft. (7.0 M) (with 3 elbows) and 13 ft. (3.9 M) (with 5 elbows). Therefore, 2-1/2 in. (64 mm) diameter combustion air and vent pipe must be used.

Combustion Air Pipe

General

Furnace combustion-air connection must be attached as shown in Fig. 25. Combustion-air intake housing plug may need to be relocated in some applications.

NOTE: All pipe joints must be cemented except attachment of combustion-air pipe to inlet housing connection, since it may be necessary to remove pipe for servicing.

NOTE: A 2-in. (51 mm) diameter pipe must be used within the furnace casing. Make all pipe diameter transitions outside furnace casing. (See Fig. 24).

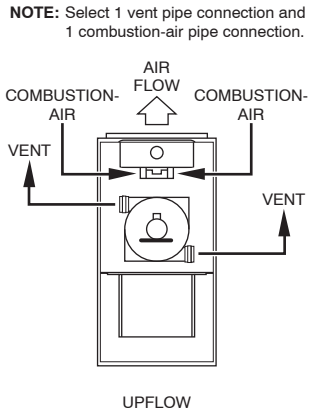

A06500

Fig. 25 - Combustion Air and Vent Pipe Connections

Attachment of Combustion Air Pipe

NOTE: Combustion air pipe system has the same diameter and same length as the vent pipe as mentioned in section "Combustion-Air and Vent Pipe Diameter."

1. Determine location of combustion-air intake pipe connection to combustion-air intake housing as shown in Fig. 25.
2. Verify combustion-air intake housing plug fitting is installed in appropriate unused intake housing connection.
3. Install combustion-air pipe grommet (factory-supplied in loose parts bag) into selected furnace casing combustion-air pipe hole.

4. Determine the number of combustion air disk halves to be installed in the combustion air intake housing. Insert perforated disk half or assembly (factory supplied in loose parts bag) in intake housing where combustion-air intake pipe will be connected.
5. Insert assembled combustion air inlet pipe into intake housing as shown in Fig. 25.

NOTE: Do not cement combustion air intake pipe permanently to combustion air intake housing since it may be necessary to remove pipe for service of igniter or flame sensor.

6. Drill a 1/8-in. (3 mm) hole in 2-in. (51 mm), combustion air pipe using the hole in intake housing as a guide.
7. Install a field-supplied No. 6 or No. 8 sheet metal screw into combustion air pipe.
8. Install casing hole filler cap (factory-supplied in loose parts bag) in unused combustion air pipe casing hole.

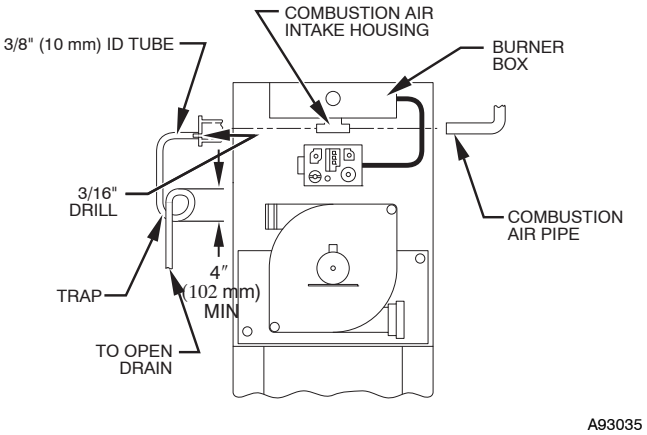

Fig. 26 - Intake Housing Plug Fitting Drain

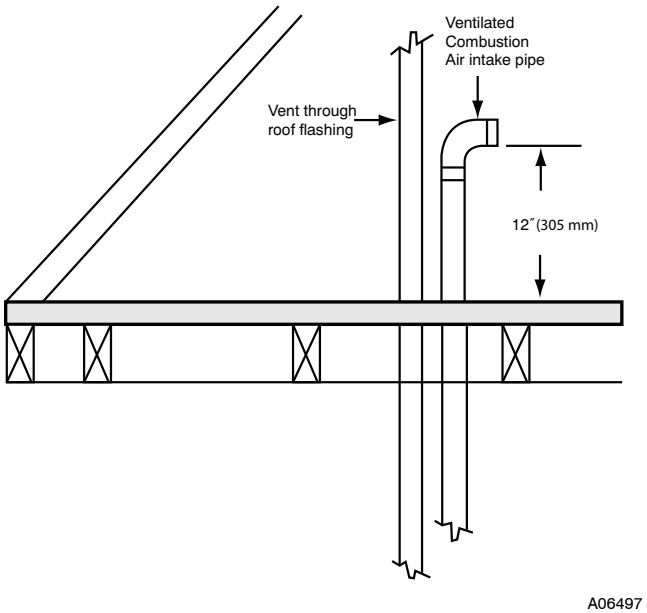

Fig. 27 - Attic Termination

Attachment of Combustion Air Intake Housing Plug Fitting

The combustion-air intake plug fitting must be installed in unused combustion air intake housing. This fitting must be attached by using RTV sealant, or by drilling a 1/8 in. (3 mm). hole in fitting, using hole in intake housing as a guide. Install a field-supplied No. 6 or No. 8 sheet metal screw.

NOTE: DO NOT OVERTIGHTEN SCREW. Breakage of intake housing or fitting may cause air leakage to occur.

A plugged drain connection has been provided on this fitting for use when moisture is found in combustion air intake pipe and combustion box.

If use of this drain connection is desired, drill out fitting's tap plug with 3/16 in. (5 mm). drill and connect a field-supplied 3/8 in. (10 mm). tube. This tube should be routed to open condensate drain for furnace and A/C (if used), and should be trapped, as shown in Fig. 26.

⚠ CAUTION

UNIT DAMAGE HAZARD

Failure to follow this caution may result in unit component damage.

Inducer housing outlet cap must be installed and fully seated against inducer housing. Clamp must be tightened to prevent any condensate leakage.

NOTE: (Direct Vent/2-Pipe System ONLY). Moisture in combustion air intake may be a result of improper termination. Ensure combustion air pipe termination is similar to those as shown in Fig. 31 so that it will not be susceptible to area where light snow or others sources of moisture could be pulled in.

Combustion Air Termination-Ventilated Combustion Air Option

Combustion air is piped directly to the burner box on furnace using the same materials used to vent the furnace. (See Table 5.) The combustion air pipe is terminated in an attic or crawl space that is well ventilated with outdoor air and is well isolated from the living space or garage. If the furnace is installed in a well ventilated attic, the combustion air pipe can be terminated in the same space. Refer to the Air for Combustion and Ventilation - Ventilated Combustion Air Option Section in these instructions.

The combustion air pipe cannot be terminated in attics or crawlspaces that use ventilation fans designed to operate during the heating season. If ventilation fans are present in these areas, the combustion air pipe must terminate outdoors as a Direct Vent/2-Pipe system.

NOTE: Combustion air pipe must have the same diameter as vent pipe.

Attic terminations require at least (1) 90 degree elbow, with the open end pointing horizontally or downward. The open end of the elbow must be at least 12 inches (305 mm) above any insulation or other materials. Screen the elbow with a wire mesh screen no smaller than 3/8 in. (10 mm) square. (See Fig. 27.)

Crawlspace termination requires the open end of the pipe pointing downward. Maintain 3 inches of clearance below the floor joist insulation and 12 inches (305 mm) above the grade. Screen the elbow with a wire mesh screen no smaller than 3/8 in. (10 mm) square. (See Fig. 28 and 29.)

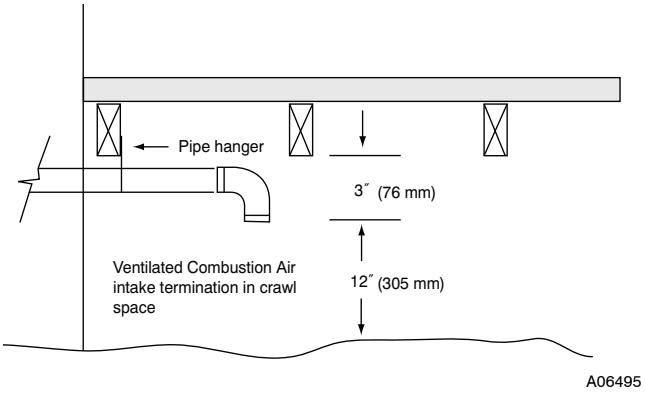

Fig. 28 - Crawlspace Termination

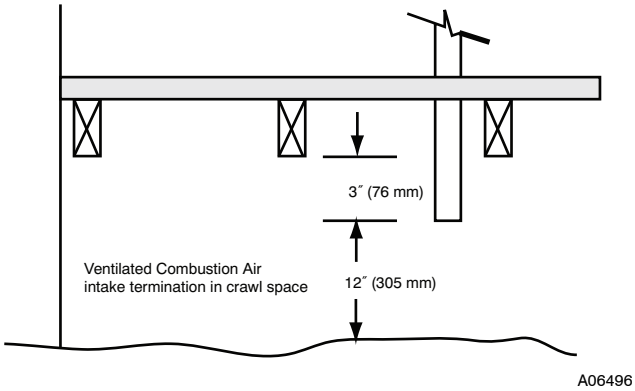

Fig. 29 - Crawlspace Termination

355BAV

AIR FOR COMBUSTION AND VENTILATION - Ventilated Combustion Air Option

Provisions for adequate combustion, ventilation, and dilution air must be provided in accordance with:

U.S. Installations: Section 9.3 of the National Fuel Gas Code NFPA 54/ANSI Z223.1-2009, Air for Combustion and Ventilation and applicable provisions of the local building codes.

Canadian Installations: Part 7 of the CAN/CSA B149-1-05, Venting Systems and Air Supply for Appliances and all authorities having jurisdiction.

⚠ CAUTION

UNIT CORROSION HAZARD

Excessive exposure to contaminated combustion air may result in safety and performance related problems.
Combustion air must not be taken from inside structure because that air is frequently contaminated by halogens, which include fluorides, chlorides, bromides, and iodides. These elements are found in aerosols, detergents, bleaches, cleaning solvents, salts, air fresheners, adhesives, paint, and other household products. Locate combustion-air inlet as far as possible from swimming pool and swimming pool pump house.

This furnace requires OUTDOOR AIR for combustion.

⚠ WARNING

CARBON MONOXIDE POISONING HAZARD

The operation of exhaust fans, kitchen ventilation fans, clothes dryers, attic exhaust fans or fireplaces could create a NEGATIVE PRESSURE CONDITION at the furnace. Make-up air MUST be provided for the ventilation devices, in addition to that required by the furnace. Refer to the Carbon Monoxide Poisoning Hazard warning in the venting section of these instructions to determine if an adequate amount of make-up air is available.

⚠ WARNING

CARBON MONOXIDE POISONING HAZARD

Failure to supply outdoor air via grilles, louvers or vents could result in death and/or personal injury. Many homes require air to be supplied from outdoors for furnace combustion, ventilation, and dilution of flue gases.

The furnace combustion air supply must be provided in accordance with this instruction manual.

An attic or crawlspace may be considered a space that freely communicates with the outdoors provided there are adequate permanent ventilation openings directly to outdoors having free area of at least 1-in.^{2}/4,000 Btuh of total input rating for all gas appliances in the space.

NOTE: In determining the free area of an opening, the blocking effect of the louvers, grilles, and screens must be considered. If the free area of a louver or grille design is unknown, it may be assumed that wood louvers have a 20 percent free area, and metal louvers or grilles have a 60 percent free area. Screens, when used, must not be smaller than 1/4-in. (6 mm) mesh. Louvers and grilles must be constructed so they cannot be closed.

Combustion Air Termination-Direct Vent / 2-Pipe System

Combustion air pipe must terminate outside the structure with the vent pipe as shown in Fig. 31. Follow the clearance requirements show in Fig. 34. Refer to Vent Termination section for complete details on termination options.

Vent Pipe

General

Furnace vent connection must be attached as shown in Fig. 25.

⚠ WARNING

CARBON MONOXIDE POISONING AND PROPERTY DAMAGE HAZARD

Failure to follow this warning could result in property damage, personal injury, or death.

Vent pipes must be airtight.

NOTE: A 2-in. (51 mm) diameter pipe must be used within the furnace casing. Make all pipe diameter transitions outside furnace casing per Fig. 24.

The minimum vent pipe length for these furnaces is 5 ft. (1.5 M). Short pipe lengths (5-8 ft. (1.5-2.4 M)) may discharge condensate droplets. These condensate droplets may be undesirable. A 12-in. (305 mm). minimum offset pipe section is recommended to reduce excessive condensate droplets from exiting vent pipe outlet. (See Fig. 30.)

Attachment of Vent Pipe

NOTE: Vent pipe system has the same diameter and same length as combustion air pipe as mentioned in section "Combustion Air Pipe and Vent Pipe Diameter."

⚠ CAUTION

UNIT DAMAGE HAZARD

Failure to follow this caution may result in unit component damage.

Vent pipe must be installed and fully seated against inducer housing. Clamp must be tightened to prevent any condensate leakage.

1. Determine location of vent pipe connection to inducer housing as shown in Fig. 25 for application.
2. Verify synthetic rubber inducer housing outlet cap and clamp are installed on appropriate unused inducer housing connection and that clamp is tight.
3. Install combustion-air pipe grommet (factory-supplied in loose parts bag) into selected furnace casing vent pipe hole. (See Fig. 18.)
4. Be certain that mating surfaces of inducer housing connection synthetic rubber coupling, and 2-in. (51 mm) diameter vent pipe are clean and dry. Assemble the synthetic rubber vent coupling (with 2 loose clamps) onto inducer housing connection. Insert the 2-in. (51 mm) diameter vent pipe through the synthetic rubber coupling and fully into inducer housing connection until it touches a stop inside the inducer housing outlet. Tighten the screws on both clamps to 15-in-lb. of torque.

NOTE: Starting at furnace, slope vent pipe a minimum of 1/4-in. (6 mm). per linear ft back toward furnace with no sags between hangers.

5. Install casing hole filler cap (factory-supplied in loose parts bag) in unused vent pipe casing hole.

Vent Termination

General

Combustion-air (direct vent/2-pipe system only) and vent pipe must terminate outside structure, either through sidewall or roof. For vent termination clearance, refer to Fig. 34 for Direct Vent/2-Pipe system and Fig. 35 for Ventilated Combustion Air option.

Roof termination is preferred since it is less susceptible to damage or contamination, and it has less visible vent vapors. Sidewall termination require sealing or shielding of building surfaces with a corrosive resistance material due to corrosive combustion products of vent system.

NOTE: (Direct Vent/2-Pipe system ONLY) A factory accessory termination kit MUST be used. See section "Vent Termination Kit (Direct Vent/2-Pipe System Only)" in this instruction.

When determining appropriate location for termination, consider the following guidelines:

1. Comply with all clearance requirements stated in Fig. 34 or Fig. 35 per application.
2. Termination or termination kit should be positioned where vent vapors will not damage plants/shrubs or air conditioning equipment.
3. Termination or termination kit should be positioned so that it will not be affected by wind eddy, such as inside building corners, nor by recirculation of flue gases, airborne leaves, or light snow.
4. Termination or termination kit should be positioned where it will not be damaged by or subjected to foreign objects such as stones, balls, etc.
5. Termination or termination kit should be positioned where vent vapors are not objectionable.

Extended Exposed Sidewall Pipes

Sidewall combustion air pipe termination (direct vent/2-pipe system only) and vent pipe termination may be extended beyond area shown in Fig. 31 or in Fig. 32 per application in outside ambient by insulating pipe as indicated in Table 7.

1. Determine combustion air pipe diameter (direct vent/2-pipe system only) and vent pipe diameter, as stated above, using total pipe length and number of elbows.
2. Using winter design temperature (used in load calculations), find appropriate temperature for your application and furnace model.
3. Determine required insulation thickness for exposed pipe length(s).

NOTE: Pipe length (ft/M) specified for maximum pipe lengths located in unconditioned spaces cannot exceed total allowable pipe length as specified in Table 8.

Vent Termination Kit (Direct Vent / 2-Pipe System Only)

NOTE: Always refer to the instructions in termination kit for the latest version.

Combustion air and vent pipes MUST terminate outside structure. A factory accessory termination kit must be installed as shown in Table 6. There are four options of vent/combustion air termination kits available as shown in Table 6.

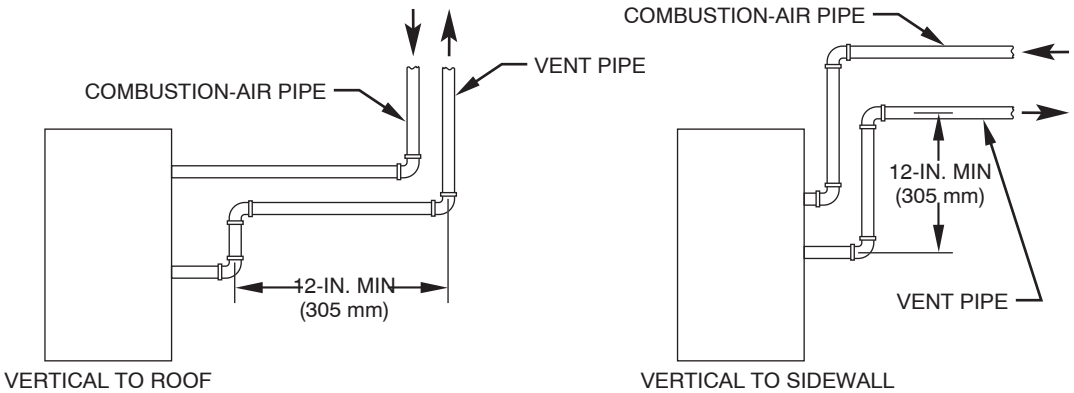

NOTE: A 12 In. (305 mm) minimum offset pipe section is recommended with short (5 to 8 ft / 1.5 to 2.4 M) vent systems. This recommendation is to reduce excessive condensate

A06356

Fig. 30 - Short Vent (5 to 8 Ft. / 1.5 to 2.4 M) System

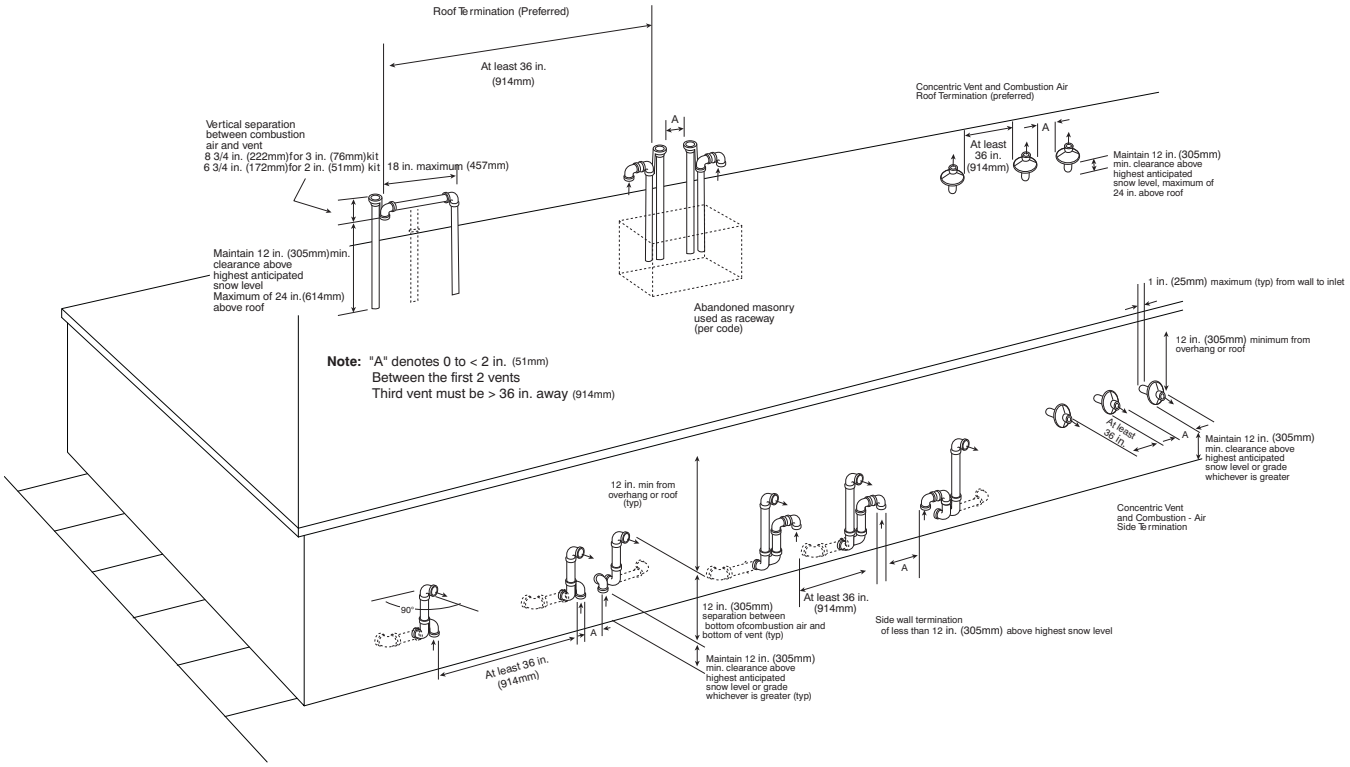

A05090

Fig. 31 - Combustion Air and Vent Pipe Termination for Direct Vent (2-pipe) System (All Sizes)

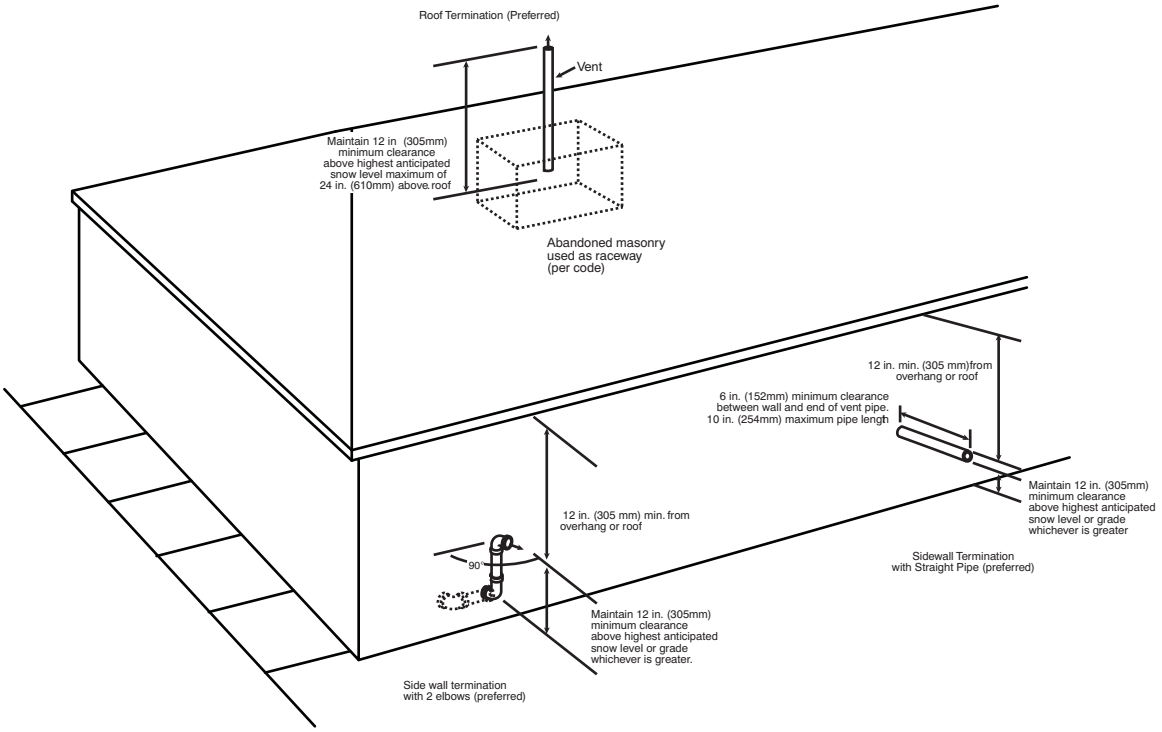

A05091

Fig. 32 - Vent Pipe Termination for Ventilated Combustion Air (1-pipe) System (All Sizes)

355BAV

Table 6 – Vent Termination Kit for Direct Vent/2-Pipe System

DIRECT VENT (2 PIPE) TERMINATION KIT	TERMINATION SYSTEM	DIAMETER OF COMBUSTION AIR AND VENT PIPES – IN. (MM)
2–in. (51 mm) Concentric Vent Kit	Single Penetration of Wall or Roof	1, 1–1/2, 2, or 2–1/2 (25, 38, 51, or 64)
3–in. (76 mm) Concentric Vent Kit	Single Penetration of Wall or Roof	2–1/2 or 3 (64 or 76)
2–in. (51 mm)Termination Bracket Kit	2Pipe Termination System	1, 1–1/2 or 2 (25, 38, or 51)
3–in. (76 mm) Termination Bracket Kit	2Pipe Termination System	2–1/2, 3 (64 or 76)

Table 7 – Maximum Allowable Exposed Vent Pipe Length (Ft / M) With Insulation in Winter Design Temperature Ambient*

UNIT SIZE	WINTER DESIGN TEMPERATURE (°F)	MAXIMUM PIPE DIAMETER IN. (mm)	INSULATION THICKNESS – IN. (mm)†				
			0	3/8	1/2	3/4	1
060–14	20 (–6.7 °C)	2 (51)	30 (9.1)	55 (16.7)	61 (18.5)	70 (21.3)	70 (21.3)
	0 (–17.8 °C)	2 (51)	16 (4.8)	33 (10.0)	38 (11.5)	46 (14.0)	53 (16.1)
	–20 (–28.4 °C)	2 (51)	9 (2.7)	23 (7.0)	26 (7.9)	33 (10.0)	38 (11.5)
080–14 080–20	20 (–6.7 °C)	2 (51)	37 (11.2)	65 (19.8)	70 (21.3)	70 (21.3)	70 (21.3)
	0 (–17.8 °C)	2 (51)	20 (6.0)	39 (11.8)	45 (13.7)	55 (16.7)	63 (19.2)
	–20 (–28.4 °C)	2 (51)	11 (3.3)	27 (8.2)	31 (9.4)	39 (11.8)	45 (13.7)
100–20	20 (–6.7 °C)	2–1/2 (64)	41 (12.4)	70 (21.3)	70 (21.3)	70 (21.3)	70 (21.3)
	0 (–17.8 °C)	2–1/2 (64)	21 (6.4)	42 (12.8)	48 (14.6)	59 (17.9)	68 (20.7)
	–20 (–28.4 °C)	2–1/2 (64)	11 (3.3)	28 (8.5)	33 (10.0)	41 (12.4)	49 (14.9)
120–20	20 (–6.7 °C)	3 (76)	49 (14.9)	70 (21.3)	70 (21.3)	70 (21.3)	70 (21.3)
	0 (–17.8 °C)	3 (76)	26 (7.9)	51 (15.5)	58 (17.6)	70 (21.3)	70 (21.3)
	–20 (–28.4 °C)	3 (76)	15 (4.5)	35 (10.6)	40 (12.1)	50 (15.2)	59 (17.9)

* Pipe length (ft) specified for maximum pipe lengths located in unconditioned spaces. Pipes located in unconditioned space cannot exceed total allowable pipe length as specified in Table 6.

† Insulation thickness based on R value of 3.5 per in.

NOTE: Combustion air pipe must have the same diameter as vent pipe.

Concentric Vent/Combustion Air Termination Kit (Direct Vent/2-Pipe System Only)

Determine an appropriate location for termination kit using the guidelines provided in section "Vent Termination: General" in this instruction.

1. Cut one 4-in. (102 mm). diameter hole for 2-in. (51 mm) kit, or one 5-in. (127 mm). diameter hole for 3-in. (76 mm). kit.
2. Loosely assemble concentric vent/combustion air termination components together using instructions in kit.
3. Slide assembled kit with rain shield REMOVED through hole.

NOTE: Do not allow insulation or other materials to accumulate inside of pipe assembly when installing it through hole.

Roof terminations-Locate assembly through roof to appropriate height as shown in Fig. 31 and 32.

Sidewall terminations-Locate assembly through sidewall with rain shield positioned no more than 1-in. (25 mm) from wall as shown in Fig. 31 and 32.

4. Disassemble loose pipe fittings. Clean and cement using same procedures as used for system piping.
5. Check required dimensions as shown.

Two-Pipe Termination Kit (Direct Vent/2-Pipe System Only

Determine an appropriate location for termination kit using the guidelines provided in section "Vent Termination: General" in this instruction.

1. Cut 2 holes, 1 for each pipe, of appropriate size for pipe size being used.
2. Loosely install elbow in bracket and place assembly on combustion-air pipe.

   Roof terminations-Loosely install pipe coupling on properly cut vent pipe. Coupling must be positioned so bracket will mount as shown in Fig. 31.

   For applications using combustion-air pipe option, indicated by dashed lines in Fig. 31, install 90° street elbow into 90° elbow, making a U-fitting. A 180° U-fitting may be used.

   Sidewall terminations-Install bracket as shown in Fig. 31.

   For applications using vent pipe option indicated by dashed lines in Fig. 31, rotate vent elbow 90° from position shown in Fig. 31.
3. Disassemble loose pipe fittings. Clean and cement using same procedures as used for system piping.
4. Check required dimensions as shown in Fig. 31.

Multiventing and Vent Terminations

When 2 or more 58UVB Furnaces are vented near each other, each furnace must be individually vented. NEVER common vent or breach vent 58UVB furnaces.

(Direct Vent/2-Pipe System ONLY)-When 2 or more 58UVB furnaces are vented near each other, 2 vent terminations may be installed as shown in Fig. 31, but next vent termination must be at least 36 in. (914 mm) away from first 2 terminations. It is important that vent terminations be made as shown in Fig. 31 to avoid recirculation of flue gases.

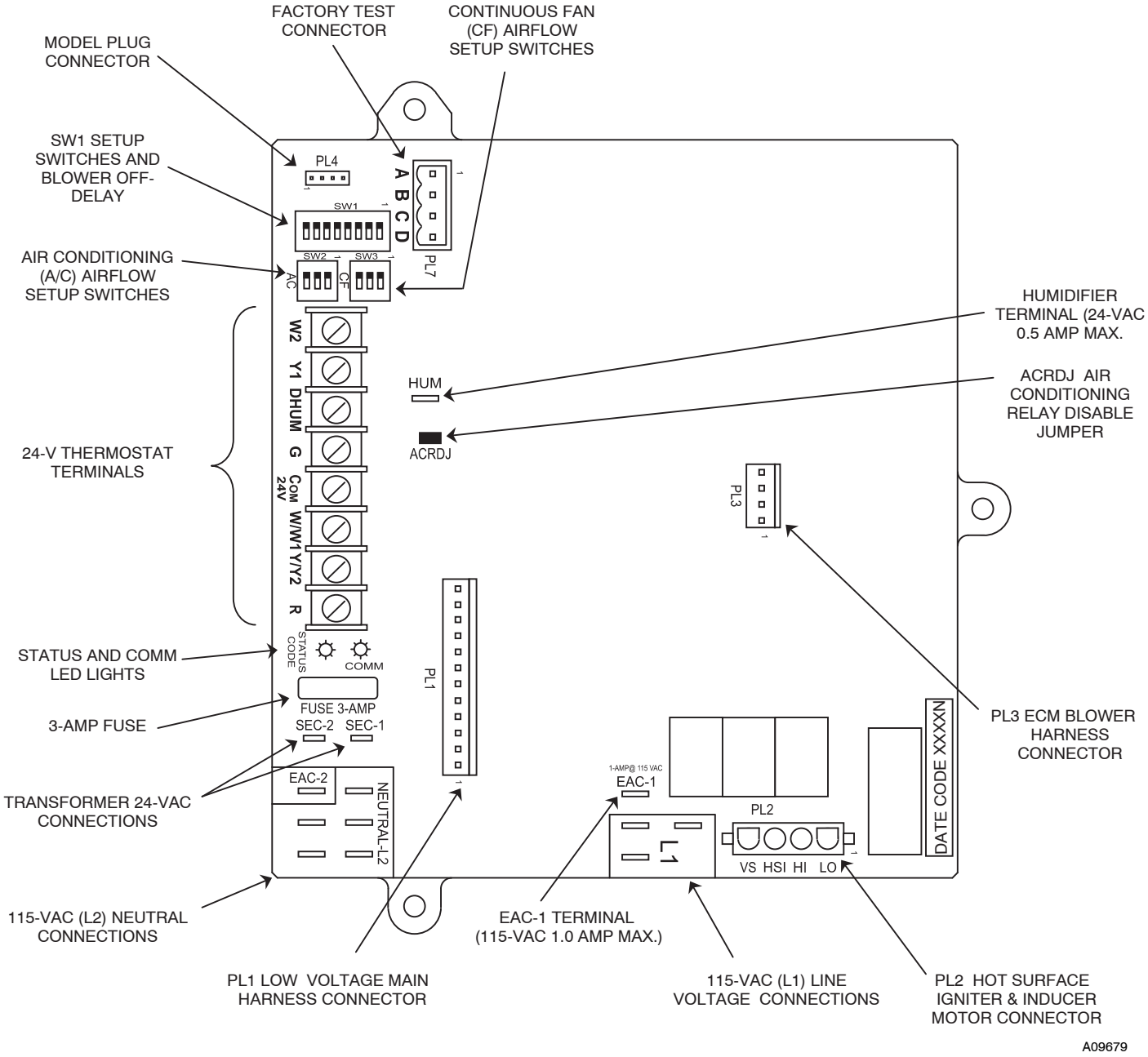

Fig. 33 - Control Center

355BAV

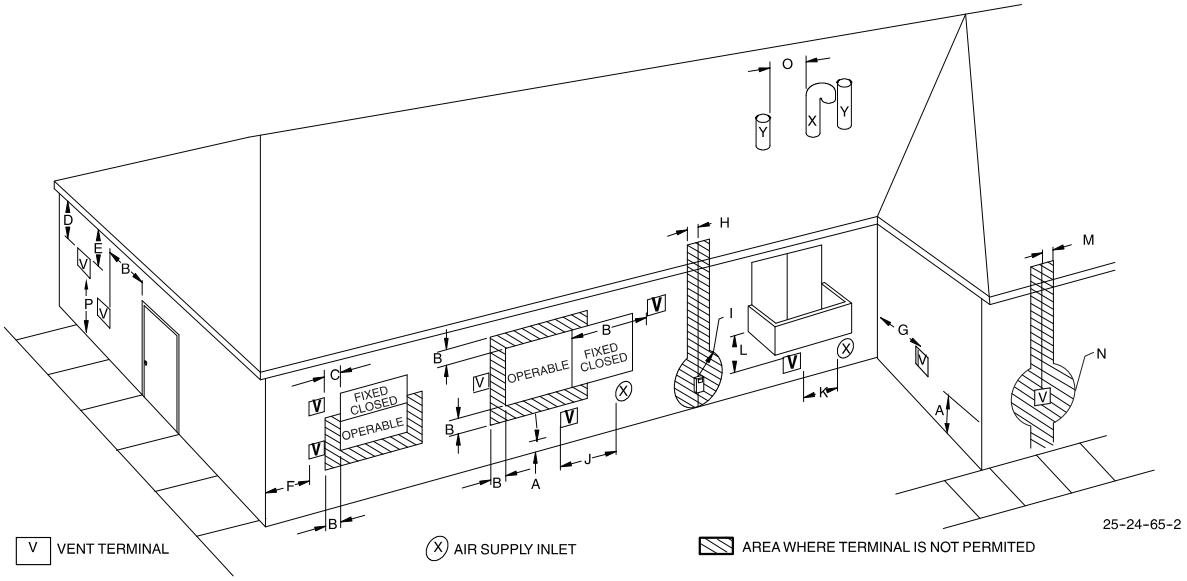

Item	Clearance Description	Canadian Installation (1)	U.S. Installation (2)
A	Clearance above grade, veranda, porch, deck, balcony, or anticipated snow level	12 inches(30 cm) #	12 inches (30 cm)
B	Clearance to a window or door that may be opened	12 inches (30 cm) for appliances > 10,000 Btuh (3 kW) and ≤ 100,000 Btuh (30 kW), 36 inches (91 cm) for appliances > 100,000 Btuh (30 kW)	9 inches (23 cm) for appliances > 10,000 Btuh (3kW) and ≤ 50,000 Btuh (15kW), 12 inches (30cm) for appliances > 50,000 Btuh (15kW)
C	Clearance to a permanently closed window	*	*
D	Vertical clearance to a ventilated soffit located above the terminal within a horizontal distance of 2 feet (61cm) from the centerline of the terminal	*	*
E	Clearance to an unventilated soffit	*	*
F	Clearance to an outside corner	*	*
G	Clearance to an inside corner	*	*
H	Clearance to each side of the centerline extended above electrical meter or gas service regulator assembly	3 feet (91 cm) within 15 feet (4.5 m) above the meter/regulator assembly	3 feet (91 cm) within 15 feet (4.5 m) above the meter/regulator assembly
I	Clearance to service regulator vent outlet	3 feet (91 cm)	*
J	Clearance to non-mechanical air supply inlet to building or the combustion air inlet to any other appliance	12 inches (23 cm) for appliances > 100,000 Btuh (3 kW) and ≤ 100,000 Btuh (30 kW), 36 inches (30 cm) for appliances > 100,000 Btuh (3 kW)	9 inches (23 cm) for appliances > 10,000 Btuh (3kW) and ≤ 50,000 Btuh (15kW), 12 inches (30cm) for appliances > 50,000 Btuh (15kW)
K	Clearance to a mechanical air supply inlet	6 feet (1.83 m)	3 feet (91 cm) above if within 10 feet (3m) horizontally
L	Clearance under a veranda, porch, deck, or balcony	12 inches(30 cm) +	*
M	Clearance to each side of the centerline extended above or below vent terminal of the furnace to a dryer or water heater vent, or other appliance's direct vent intake or exhaust.	12 inches (30 cm)	12 inches (30 cm)
N	Clearance to the vent terminal of a dryer vent, water heater vent, or other appliances direct vent intake or exhaust.	3 feet (91 cm)	3 feet (91 cm)
O	Clearance from a plumbing vent stack	3 feet (91 cm)	3 feet (91 cm)
P	Clearance above paved sidewalk or paved driveway located on public property	7 feet (2.13m)**	*

(1.) In accordance with the current CSA B149.1, Natural Gas and Propane Installation Code

(2.) In accordance with the current ANSI Z223.1/NFPA 54, National Fuel Gas Code

18 ″ (46 cm) above roof surface

+ Permitted only if veranda, porch, deck, or balcony is fully open on a minimum of two sides beneath the floor.

* For clearances not specified in ANSI Z223.1/NFPA 54 or CSA B149.1, clearances shall be in accordance with local installation codes and the requirements of the gas supplier and the manufacturer's installation instructions

** A vent shall not terminate above a sidewalk or paved driveway that is located between two single family dwellings and serves both dwellings.

Notes:

1. The vent for this appliance shall not terminate
   a. Over public walkways; or
   b. Near soffit vents or crawl space vents or other areas where condensate or vapor could create a nusaince or hazard or property damage; or
   c. Where condensate vapor could cause damage or could be detrimental to the operation of regulators, relief valves, or other equipment.
2. When locating vent terminations, consideration must be given to prevailing winds, location, and other conditions which may cause recirculation of the combustion products of adjacent vents. Recirculation can cause poor combustion, inlet condensate problems, and accelerated corrosion of the heat exchangers.
3. Avoid venting under a deck or large overhang. Recirculation could occur and cause performance or system problems.

A05009

Fig. 34 - Direct Vent Termination Clearance

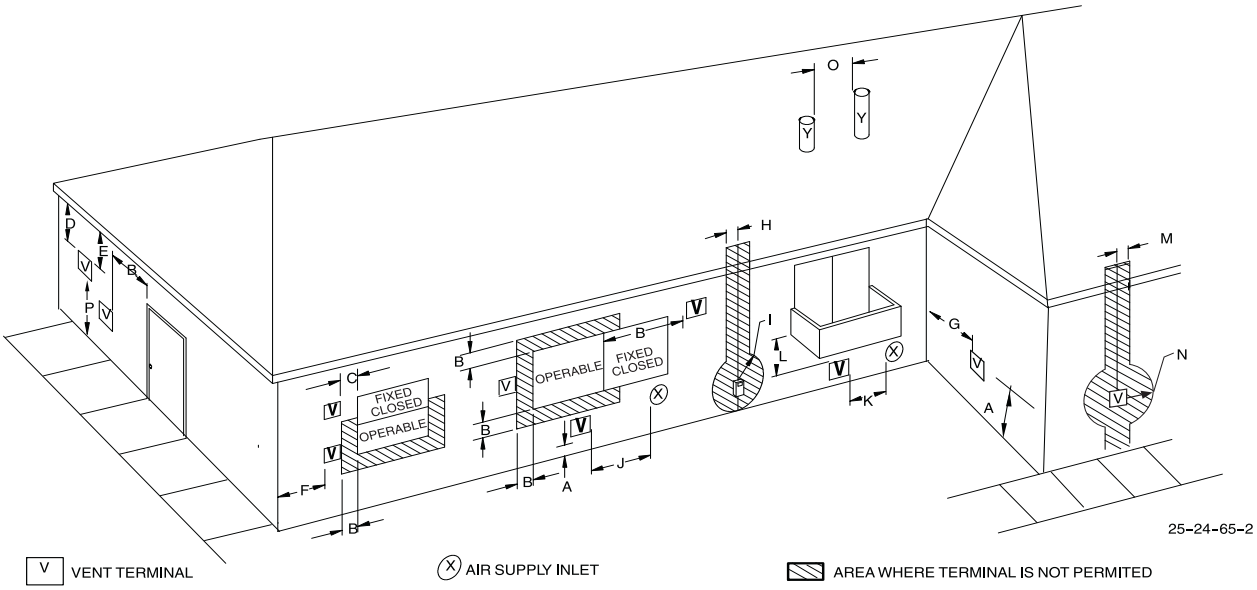

Item	Clearance Descriptions	Canadian Installation (1)	U.S. Installation (2)
A	Clearance above grade, veranda, porch, deck, balcony, or anticipated snow level	12 inches (30cm) #	12 inches (30 cm)
B	Clearance to a window or door that may be opened	6 inches (15 cm) for appliances ≤ 10,000 Btuh (3 kW) 12 inches (30 cm) for appliances > 10,000 Btuh (3 kW0) and ≤ 100,000 Btuh (30 kW), 36 inches (91 cm) for appliances > 100,000 Btuh (30 kW)	4 feet(1.2 m) below or to the side of the opening. 1 foot(30 cm) above the opening.
C	Clearance to a permanently closed window	*	*
D	Vertical clearance to a ventilated soffit located above the terminal within a horizontal distance of 2´(61cm) from the centerline of the terminal	*	*
E	Clearance to an unventilated soffit	*	*
F	Clearance to an outside corner	*	*
G	Clearance to an inside corner	*	*
H	Clearance to each side of the centerline extended above electrical meter or gas service regulator assembly	3 feet (91 cm) within 15 feet(4.5 m) above the meter/regulator assembly	3 feet (91 cm) within 15 feet (4.5 m) above the meter/regulator assembly
I	Clearance to service regulator vent outlet	3 feet (91 cm)	*
J	Clearance to non-mechanical air supply inlet to building or the combustion air inlet to any other appliance	6 inches (15 cm) for appliances ≤ 10,000 Btuh (3 kW) 12 inches (30 cm) for appliances > 10,000 Btuh (3 kW0) and ≤ 100,000 Btuh (30 kW) 36 inches (91 cm) for appliances > 100,000 Btuh (30 kW)	4 feet(1.2 m) below or to the side of opening: 1 foot (30 cm) above opening.
K	Clearance to a mechanical air supply inlet	6 feet(1.83 m)	3 feet(91 cm) above if within 10 feet (3 m horizontally)
L	Clearance under a veranda, porch, deck, or balcony	12 inches(30 cm) +	*
M	Clearance to each side of the centerline extended above or below vent terminal of the furnace to a dryer or water heater vent, or other appliance's direct vent intake or exhaust.	*	*
N	Clearance to the vent terminal of a dryer vent, water heater vent, or other appliances direct vent intake or exhaust.	*	*
O	Clearance from a plumbing vent stack	*	*
P	Clearance above paved sidewalk or paved driveway located on public property	7 feet (2.13m)**	7 feet (2.13m)

(1.) In accordance with the current CSA B149.1, Natural Gas and Propane Installation Code

(2.) In accordance with the current ANSI Z223.1/NFPA 54, National Fuel Gas Code

18˝ (46 cm) above roof surface

+ Permitted only if veranda, porch, deck, or balcony is fully open on a minimum of two sides beneath the floor.

* For clearances not specified in ANSI Z223.1/NFPA 54 or CSA B149.1, clearances shall be in accordance with local installation codes and the requirements of the gas supplier and the Manufacturer's installation instructions.

** A vent shall not terminate above a sidewalk or paved driveway that is located between two single family dwellings and serves both dwellings.

Notes:

1. The vent for this appliance shall not terminate
   a. Over public walkways; or
   b. Near soffit vents or crawl space vents or other areas where condensate or vapor could create a nusiance or hazard or property damage; or
   c. Where condensate vapor could cause damage or could be detrimental to the operation of regulators, relief valves, or other equipment.
2. When locating vent terminations, consideration must be given to prevailing winds, location, and other conditions which may cause recirculation of the combustiob products of adjacent vents. Recirculation can cause poor combustion, inlet condensate problems, and accelerated corrosion of the heat exchangers.
3. Avoid venting under a deck or large overhang. Recirculation could occur and cause performance or system problems.

A05013

Fig. 35 - Other than Direct Vent Termination Clearance

Table 8 – Maximum Allowable Pipe Length - Ft. (M)

VARIABLE SPEED VENT SIZING TABLE									
ALTITUDE FT. (M)	UNIT SIZE (BTUH)	Termination Type	Direct & Non–Direct Pipe Dia. In. (mm)*	NUMBER OF 90° ELBOWS					
				1	2	3	4	5	6
0 to 2000 (0 to 610)	60,000	2 Pipe or 2–In. (51) Concentric	1–1/2 (38)	50 (15)	45 (14)	40 (13)	35 (11)	30 (9)	25 (8)
			2 (51)	70 (21)	70 (21)	70 (21)	70 (21)	70 (21)	70 (21)
	80,000	2 Pipe or 2–In. (51) Concentric	1–1/2 (38)	30 (9)	25 (8)	20 (6)	15 (5)	10 (3)	5 (2)
			2 (51)	70 (21)	70 (21)	70 (21)	70 (21)	70 (21)	70 (21)
	100,000	2 Pipe or 2–In. (51) Concentric	2 (51)	45 (14)	40 (13)	35 (11)	30 (9)	25 (8)	20 (6)
			2–1/2 (64)	70 (21)	70 (21)	70 (21)	70 (21)	70 (21)	70 (21)
	120,000	2 Pipe or 3–In. (76) Concentric	2–1/2 (64)	10 (3)	NA	NA	NA	NA	NA
			3 (76)	35 (11)	30 (9)	15 (5)	NA	NA	NA
			3 (76)†	70 (21)	70 (21)	70 (21)	70 (21)	70 (21)	70 (21)
ALTITUDE	UNIT SIZE (BTUH)	Termination Type	Direct & Non–Direct Pipe Dia. In. (mm)*	NUMBER OF 90° ELBOWS					
				1	2	3	4	5	6
2001 to 3000 (610 to 914)	60,000	2 Pipe or 2–In. (51) Concentric	1–1/2 (38)	45 (14)	40 (13)	35 (11)	30 (9)	25 (8)	20 (6)
			2 (51)	70 (21)	70 (21)	70 (21)	70 (21)	70 (21)	70 (21)
	80,000	2 Pipe or 2–In. (51) Concentric	1–1/2 (38)	26 (8)	21 (6)	16 (5)	11 (3)	6 (2)	NA
			2 (51)	70 (21)	70 (21)	70 (21)	70 (21)	70 (21)	70 (21)
	100,000	2 Pipe or 2–In. (51) Concentric	2 (51)	40 (12)	35 (11)	30 (9)	25 (8)	20 (6)	15 (5)
			2–1/2 (64)	70 (21)	70 (21)	70 (21)	70 (21)	70 (21)	70 (21)
	120,000	2 Pipe or 3–In. (76) Concentric	3 (76)	31 (9)	26 (8)	12 (4)	NA	NA	NA
			3 (76)†	63 (19)	62 (19)	62 (19)	61 (19)	61 (19)	61 (19)
ALTITUDE	UNIT SIZE (BTUH)	Termination Type	Direct & Non–Direct Pipe Dia. In. (mm)*	NUMBER OF 90° ELBOWS					
				1	2	3	4	5	6
3001 to 4000 (914 to 1219)	60,000	2 Pipe or 2–In. (51) Concentric	1–1/2 (38)	42 (13)	37 (11)	32 (10)	27 (8)	22 (7)	17 (5)
			2 (51)	70 (21)	70 (21)	70 (21)	70 (21)	70 (21)	70 (21)
	80,000	2 Pipe or 2–In. (51) Concentric	1–1/2 (38)	25 (8)	20 (6)	15 (5)	10 (3)	5 (2)	NA
			2 (51)	70 (21)	70 (21)	70 (21)	70 (21)	70 (21)	70 (21)
	100,000	2 Pipe or 2–In. (51) Concentric	2 (51)	38 (12)	33 (10)	28 (9)	23 (7)	18 (6)	13 (4)
			2–1/2 (64)	70 (21)	70 (21)	70 (21)	70 (21)	70 (21)	70 (21)
	120,000	2 Pipe or 3–In. (76) Concentric	3 (76)	29 (9)	24 (7)	10 (3)	NA	NA	NA
			3 (76)†	59 (18)	59 (18)	58 (18)	57 (17)	57 (17)	56 (17)
ALTITUDE	UNIT SIZE (BTUH)	Termination Type	Direct & Non–Direct Pipe Dia. In. (mm)*	NUMBER OF 90° ELBOWS					
				1	2	3	4	5	6
4001 to 5000‡ (1219 to 1524)	60,000	2 Pipe or 2–In. (51) Concentric	1–1/2 (38)	40 (12)	35 (11)	30 (9)	25 (8)	20 (6)	15 (10)
			2 (51)	70 (21)	70 (21)	70 (21)	70 (21)	70 (21)	70 (21)
	80,000	2 Pipe or 2–In. (51) Concentric	1–1/2 (38)	23 (7)	18 (6)	13 (4)	8 (2)	NA	NA
			2 (51)	70 (21)	70 (21)	70 (21)	70 (21)	70 (21)	68 (21)
	100,000	2 Pipe or 2–In. (51) Concentric	2 (51)	36 (11)	31 (9)	26 (8)	21 (6)	16 (5)	11 (3)
			2–1/2 (64)	70 (21)	70 (21)	70 (21)	70 (21)	70 (21)	70 (21)
	120,000	2 Pipe or 3–In. (76) Concentric	3 (76)†	56 (17)	55 (17)	54 (17)	53 (16)	52 (16)	52 (16)
ALTITUDE	UNIT SIZE (BTUH)	Termination Type	Direct & Non–Direct Pipe Dia. In. (mm)*	NUMBER OF 90° ELBOWS					
				1	2	3	4	5	6
5001 to 6000‡ (1524 to 1829)	60,000	2 Pipe or 2–In. (51) Concentric	1–1/2 (38)	37 (11)	32 (10)	27 (8)	22 (7)	17 (5)	12 (4)
			2 (51)	70 (21)	70 (21)	70 (21)	70 (21)	70 (21)	70 (21)
	80,000	2 Pipe or 2–In. (51) Concentric	1–1/2 (38)	22 (7)	17 (5)	12 (4)	7 (2)	NA	NA
			2 (51)	70 (21)	70 (21)	70 (21)	70 (21)	68 (21)	63 (19)
	100,000	2 Pipe or 2–In. (51) Concentric	2 (51)	33 (10)	28 (9)	23 (7)	18 (6)	13 (4)	8 (2)
			2–1/2 (64)	70 (21)	70 (21)	70 (21)	70 (21)	70 (21)	70 (21)
	120,000	2 Pipe or 3–In. (76) Concentric	3 (76)†	53 (16)	52 (16)	50 (15)	49 (15)	48 (15)	47 (14)

*See notes on next page.

355BAV

Table 8 — Maximum Allowable Pipe Length - Ft./M) (Continued)

Variable Speed Vent Sizing Table									
ALTITUDE FT. (M)	UNIT SIZE (BTUH)	Termination Type	Direct & Non–Direct Pipe Dia. In. (mm)*	NUMBER OF 90° ELBOWS					
				1	2	3	4	5	6
6001 to 7000‡ (1829 to 2134)	60,000	2 Pipe or 2–In. (51) Concentric	1–1/2 (38)	35 (11)	30 (9)	25 (8)	20 (6)	15 (5)	10 (3)
			2 (51)	70 (21)	70 (21)	68 (21)	67 (20)	66 (20)	64 (20)
	80,000	2 Pipe or 2–In. (51) Concentric	1–1/2 (38)	20 (6)	15 (5)	10 (3)	5 (2)	NA	NA
			2 (51)	70 (21)	70 (21)	68 (21)	67 (20)	62 (19)	57 (17)
	100,000	2 Pipe or 2–In. (51) Concentric	2 (51)	31 (9)	26 (8)	21 (6)	16 (5)	11 (3)	6 (2)
			2–1/2 (64)	70 (21)	70 (21)	68 (21)	67 (20)	66 (20)	64 (20)
	120,000	2 Pipe or 3–In. (76) Concentric	3 (76)†	49 (15)	48 (15)	47 (14)	45 (14)	44 (13)	43 (13)
ALTITUDE	UNIT SIZE (BTUH)	Termination Type	Direct & Non–Direct Pipe Dia. In. (mm)*	NUMBER OF 90° ELBOWS					
				1	2	3	4	5	6
7001 to 8000‡ (2134 to 2438)	60,000	2 Pipe or 2–In. (51) Concentric	1–1/2 (38)	32 (10)	27 (8)	22 (7)	17 (5)	12 (4)	7 (2)
			2 (51)	66 (20)	65 (20)	63 (19)	62 (19)	60 (18)	59 (18)
	80,000	2 Pipe or 2–In. (51) Concentric	1–1/2 (38)	18 (6)	13 (4)	8 (2)	NA	NA	NA
			2 (51)	66 (20)	65 (20)	63 (19)	62 (19)	57 (17)	52 (16)
	100,000	2 Pipe or 2–In. (51) Concentric	2 (51)	29 (9)	24 (7)	19 (6)	14 (4)	9 (3)	NA
			2–1/2 (64)	66 (20)	65 (20)	63 (19)	62 (19)	60 (18)	59 (18)
	120,000	2 Pipe or 3–In. (76) Concentric	3 (76)†	46 (14)	44 (13)	43 (13)	41 (13)	40 (12)	38 (12)
ALTITUDE	UNIT SIZE (BTUH)	Termination Type	Direct & Non–Direct Pipe Dia. In. (mm)*	NUMBER OF 90° ELBOWS					
				1	2	3	4	5	6
8001 to 9000 Ft.‡ (2438 to 2743)	60,000	2 Pipe or 2–In. (51) Concentric	1–1/2 (38)	30 (9)	25 (8)	20 (6)	15 (5)	10 (3)	5 (2)
			2 (51)	62 (19)	60 (18)	58 (18)	56 (17)	55 (17)	53 (16)
	80,000	2 Pipe or 2–In. (51) Concentric	1–1/2 (38)	17 (5)	12 (3)	7 (2)	NA	NA	NA
			2 (51)	62 (19)	60 (18)	58 (18)	56 (17)	51 (16)	46 (14)
	100,000	2 Pipe or 2–In. (51) Concentric	2 (51)	27 (8)	22 (7)	17 (5)	12 (4)	7 (2)	NA
			2–1/2 (64)	62 (19)	60 (18)	58 (18)	56 (17)	55 (17)	53 (16)
	120,000	2 Pipe or 3–In. (76) Concentric	3 (76)†	43 (13)	41 (13)	39 (12)	37 (11)	35 (11)	34 (10)
ALTITUDE	UNIT SIZE (BTUH)	Termination Type	Direct & Non–Direct Pipe Dia. In. (mm)*	NUMBER OF 90° ELBOWS					
				1	2	3	4	5	6
9001 to 10000 ‡ (2743 to 3048)	60,000	2 Pipe or 2–In. (51) Concentric	1–1/2 (38)	27 (8)	22 (7)	17 (5)	12 (4)	7 (2)	NA
			2 (51)	57 (17)	55 (17)	53 (16)	51 (16)	49 (15)	47 (14)
	80,000	2 Pipe or 2–In. (51) Concentric	1–1/2 (38)	15 (5)	10 (3)	5 (2)	NA	NA	NA
			2 (51)	57 (17)	55 (17)	53 (16)	51 (16)	46 (14)	41 (13)
	100,000	2 Pipe or 2–In. (51) Concentric	2 (51)	24 (7)	19 (6)	14 (4)	9 (3)	NA	NA
			2–1/2 (64)	57 (17)	55 (17)	53 (16)	51 (16)	49 (15)	47 (14)
	120,000	2 Pipe or 3–In. (76) Concentric	3 (76)†	39 (12)	37 (11)	35 (11)	33 (10)	31 (10)	29 (9)

* Disk usage–Unless otherwise stated, use perforated disk assembly (factory–supplied in loose parts bag).
† Wide radius elbow.
‡ Vent sizing for Canadian installations over 4500 ft. (1372 M) above sea level are subject to acceptance by the local authorities having jurisdiction.
NA–Not Allowed; pressure switch will not make.

NOTES:
1. Do not use pipe size greater than those specified in table or incomplete combustion, flame disturbance, or flame sense lockout may occur.
2. Size both the combustion–air and vent pipe independently, determine the smallest diameter allowed by the table for each pipe, then use the larger diameter for both pipes.
3. Assume two 45° elbows equal one 90° elbow. Long radius elbows are desirable and may be required in some cases.
4. Elbows and pipe sections within the furnace casing and at the vent termination should not be included in vent length or elbow count.
5. The minimum pipe length is 5 ft. (1.5 M) for all applications.

CONDENSATE DRAIN

General

Condensate trap is shipped installed in the blower shelf. Condensate trap can be RELOCATED to the side of the casing.

Condensate trap MUST be used for all applications.

An external trap is not required when connecting the field drain to this condensate trap.

The field drain connection (condensate trap or drain tube coupling) is sized for 1/2-in. CPVC, 1/2-in. PVC, or 5/8-in. ID tube connection.

Drain pipe and fittings must conform to ANSI standards and ASTM D1785, D2466, or D2846. CPVC or PVC cement must conform to ASTM D2564 or F493. Primer must conform to ASTM F656. In Canada, use CSA or ULC certified schedule 40 CPVC or PVC drain pipe, fittings, and cement.

When a condensate pump is required, select a pump which is approved for condensing furnace applications. To avoid condensate spillage, select a pump with an overflow switch.

Furnace condensate is mildly acidic, typically in the pH range of 3.2 to 4.5. Due to corrosive nature of this condensate, a condensate pH neutralizing filter may be desired. Check with local authorities to determine if a pH neutralizer is required.

Application

The furnace, A/C, and humidifier drains may be combined and drained together. The A/C drain must have an external, field supplied trap prior to the furnace drain connection. All drain connections (furnace, A/C, or humidifier) must be terminated into an open or vented drain as close to the respective equipment as possible to prevent siphoning of the equipment's drain.

See Fig. 37 for example of possible field drain attachment using 1/2-in. CPVC or PVC tee for vent and A/C or humidifier drain connection.

Outdoor draining of the furnace is permissible if allowed by local codes. Caution should be taken when freezing ambient may freeze drain pipe and prohibit draining.

⚠ CAUTION

UNIT MAY NOT OPERATE

Failure to follow this caution may result in intermittent unit operation.

Unit must not be installed, operated, and then turned and left off in an unoccupied structure during cold weather when temperature drops to 32°F or below unless drain trap and drain line have adequate freeze protection. See Service and Maintenance Instructions for winterizing procedure. (See Fig. 36.)

⚠ WARNING

PERSONAL INJURY HAZARD

Failure to follow this warning could result in property damage and personal injury or death.

Caution should be taken to prevent draining where slippery conditions may cause personal injuries. Excessive condensate draining may cause saturated soil conditions which may result in damage to plants.

Condensate Drain Protection

Freezing condensate left in condensate trap and drain line may cause cracks, and possible water damage may occur. If freeze protection is required, use condensate freeze protection accessory or equivalent 3 to 6 watt per ft at 120v and 40°F self-regulating, shielded, and waterproof heat tape. See Installation Instructions supplied with accessory or heat tape manufacturer's recommendations.

1. Fold heat tape in half and wrap on itself 3 times.
2. Locate heat tape between sides of condensate trap back. (See Fig. 38.)
3. Use wire ties to secure heat tape in place. Wire ties can be positioned in notches of condensate trap sides. (See Fig. 38.)
4. Wrap field drain pipe with remaining heat tape, approximately 1 wrap per ft.
5. When using field-supplied heat tape, follow heat tape manufacturer's instructions for all other installation guidelines.

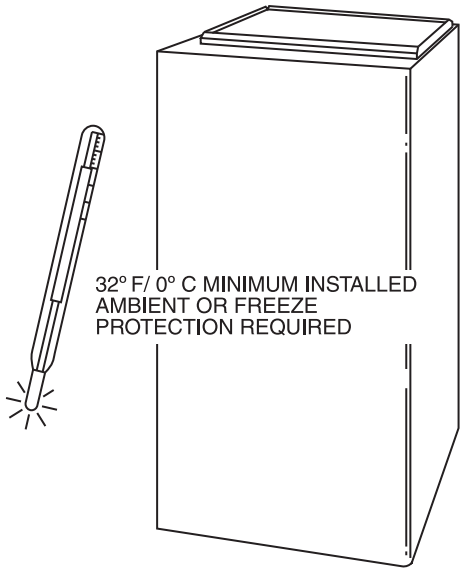

A07911

Fig. 36 - Freeze Protection

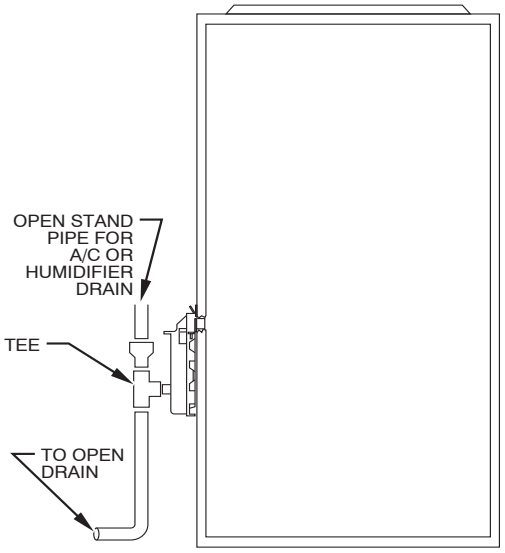

A94054

Fig. 37 - Example of Field Drain Attachment

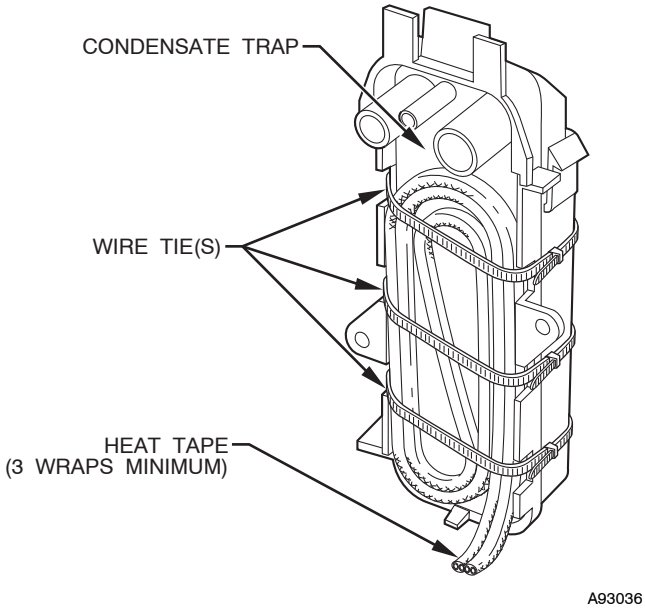

Fig. 38 - Condensate Trap Heat Tape

START-UP, ADJUSTMENTS AND SAFETY CHECK

General

1. Furnace must have a 115-v power supply properly connected and grounded.

NOTE: Proper polarity must be maintained for 115-v wiring. If polarity is incorrect, control status indicator light flashes rapidly and furnace does not operate.

2. Thermostat wire connections at terminals R, W/W1, G, and Y/Y2 must be made at 24-v terminal block on furnace control.
3. Natural gas service pressure must not exceed 0.5 psig (14-in. wc), but must be no less than 0.16 psig (4.5-in. wc).
4. Blower access panel must be in place to complete 115-v electrical circuit to furnace.

⚠ CAUTION

UNIT MAY NOT OPERATE

Failure to follow this caution may result in intermittent unit operation or performance satisfaction.

These furnaces are equipped with a manual reset limit switch in burner box. This switch opens and shuts off power to the gas valve if an overheat condition (flame rollout) occurs in burner enclosure. Correct inadequate combustion-air supply or improper venting condition before resetting switch. DO NOT jumper this switch.

Before operating furnace, check flame rollout manual reset switch for continuity. If necessary, press button to reset switch.

Select Setup Switch Positions

Air Conditioning (A/C) Setup Switches

The air conditioning setup switches are used to match furnace airflow to cooling unit used.

To set the desired cooling airflow:

1. Remove main furnace door and blower access panel.
2. Locate A/C setup switches on furnace control. (See Fig. 33.)
3. Determine air conditioning tonnage used.
4. Use wiring schematic to determine proper setup position of A/C switches. (See Fig. 23 and 39.)

NOTE: Excessive airflow caused by improper A/C switch setup may cause condensate blowoff in cooling mode.

5. Replace main furnace door and blower access panel.

NOTE: EAC-1 terminal is energized whenever blower operates. HUM terminal is only energized when blower is energized in heating.

Continuous Fan (CF) Setup Switches

The CF setup switches are used to select desired airflow when thermostat is in continuous fan mode or to select low-cooling airflow for two-speed cooling units. This setup feature allows continuous fan airflow or low-cooling airflow to be adjusted. To set desired continuous fan airflow or low-cooling airflow:

1. Remove main furnace door and blower access panel.
2. Locate CF setup switches on furnace control. (See Fig. 33.)
3. Determine desired continuous fan airflow or low-cooling airflow.
4. Use wiring schematic to determine proper setup position of CF switches. (See Fig. 23 and 39.)
5. Replace main furnace door and blower access panel.

SETUP SWITCHES (SW1)

The furnace control has 8 setup switches that may be set to meet the application requirements. Position these setup switches for the appropriate requirement.

1. Remove main furnace door and blower access panel.
2. Locate setup switches on furnace control. (See Fig. 33.)
3. See Table 9 for setup switch description. (See Fig. 23.)
4. Replace main furnace door and blower access panel.

NOTE: If a bypass humidifier is used, setup switch SW1-3 (Low HEAT Rise Adjust) should be in ON position. This compensates for the increased temperature in return air resulting from bypass.

NOTE: If modulating dampers are used, blower motor automatically compensates for modulating dampers.

Prime Condensate Trap With Water

⚠ CAUTION

UNIT MAY NOT OPERATE

Failure to follow this caution may result in intermittent unit operation or performance satisfaction.

Condensate trap must be PRIMED or proper draining may not occur. The condensate trap has 2 internal chambers which can ONLY be primed by pouring water into the inducer drain side of condensate trap.

1. Remove upper inducer housing drain connection cap. (See Fig. 41.)
2. Connect field-supplied 1/2-in. ID tube to upper inducer housing drain connection.
3. Insert field-supplied funnel into tube.
4. Pour 1 quart of water into funnel/tube. Water should run through inducer housing, overfill condensate trap, and flow into open field drain. (See Fig. 42.)

AIR CONDITIONING TONS (12,000 BTU/HR)	AIRFLOW* (CFM)	060 & 080-14 MODEL	080-20 & 100 MODEL	120 MODEL
1-1/2	525 (600)	X		
2	700 (800)	X	X	X
2-1/2	875 (1000)	X	X	X
3	1050 (1200)	X	X	X
3-1/2	1225 (1400)	X	X	X
4	1400 (1600)		X	X
5	1750 (2000)		X	X
6	2100 (2100)			X

X-INDICATES AN ALLOWABLE SELECTION.

* Airflow shown in parentheses is airflow unit that the unit will deliver when setup switch SW1-5 is ON (selects 400 CFM/ton)

A/C OR CF AIRFLOW SELECTION CHART
BASED ON 350 CFM/TON

MODEL SIZE								
060, 080-14	DEF	525_2	700	875	1050_1	1225	1225	1225
080-20, 100	DEF	700_2	875	1050	1225	1400	1750_1	1750
120	DEF	700	875_2	1050	1225	1400	1750_1	2100

1.DEFAULT A/C AIRFLOW WHEN A/C SWITCHES ARE IN OFF POSITION

2.DEFAULT CONT. FAN AIRFLOW WHEN CF SWITCHES ARE IN OFF POSITION

A06508

Fig. 39 - A/C or CF Airflow Selection Chart Based on 350 and 400CFM/Ton

Table 9 – Furnace Setup Switch Description

SETUP SWITCH NO.	SWITCH NAME	NORMAL POSITION	DESCRIPTION OF USE
SW1 – 1	Status Code Recovery	OFF	Turn ON to retrieve up to 7 stored status codes for troubleshooting assistance when R thermostat lead is disconnected.
SW1 – 2	Adaptive Heat Mode	OFF	Allows 2 – stage operation with a single stage thermostat. Turn ON when using 2 stage thermostat to allow Low Heat operation when R to W/W1 closes and High Heat operation when R to W/W1 and W2 close.
SW1 – 3	Low Heat Rise Adjust	OFF	Turn ON to increase Low Heat airflow by 10 percent. This compensates for increased return air temperature caused with bypass humidifier.
SW1 – 4	Comfort/Efficiency Adjustment	ON	Turn ON to decrease Low Heat airflow by 22 percent and High Heat airflow 15 percent for maximum comfort.
SW1 – 5	CFM per ton adjust	OFF	Turn ON for 400 CFM per ton. Turn OFF for 350 CFM per ton.
SW1 – 6	Component Self – Test	OFF	Turn ON to initiate Component Self – Test for troubleshooting assistance when R thermostat lead is disconnected. Turn OFF when Self – Test is completed.
SW1 – 7	Blower OFF delay	ON or OFF	Control blower Off Delay time. Used in conjunction with SW1 – 8. See Table 10.
SW1 – 8	Blower OFF delay	ON or OFF	Control blower Off Delay time. Used in conjunction with SW1 – 7. See Table 10.

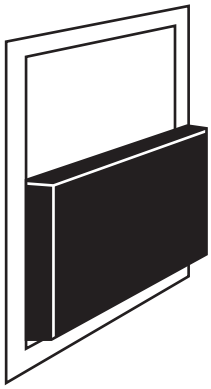

A04001

Fig. 40 - Example of Setup Switch in Off Position

5. Remove funnel and tube from inducer housing and replace drain connection cap and clamp.

Purge Gas Lines

If not previously done, purge the lines after all connections have been made and check for leaks.

⚠ WARNING

FIRE AND EXPLOSION HAZARD

Failure to follow this warning could result in a fire, explosion, personal injury, or death.

Never purge a gas line into a combustion chamber. Never test for gas leaks with an open flame. Use a commercially available soap solution made specifically for the detection of leaks to check all connections.

Sequence of Operation

Using schematic diagram, follow sequence of operation through different modes. (See Fig. 23.) Read and follow wiring diagram carefully.

⚠ CAUTION

UNIT MAY NOT OPERATE

Failure to follow this caution may result in intermittent unit operation.

Furnace control must be grounded for proper operation, or control will lock out. Control is grounded through green/yellow wire routed to gas valve and burner box screw.

NOTE: If a power interruption occurs during a call for heat (W/W1 or W/W1-and-W2), the control will start a 90-second blower-only ON period two seconds after power is restored, if the thermostat is still calling for gas heating. The amber LED light will flash code 12 during the 90-second period, after which the LED will be ON continuous, as long as no faults are detected. After the 90-second period, the furnace will respond to the thermostat normally.

The blower door must be installed for power to be conducted through the blower door interlock switch ILK to the furnace control CPU, transformer TRAN, inducer motor IDM, blower motor BLWM, hot-surface igniter HSI, and gas valve GV.

SINGLE-STAGE THERMOSTAT AND TWO-STAGE HEATING (ADAPTIVE MODE)

See Fig. 19 or 50 for thermostat connections.

NOTE: Low-heat-only switch, SW1-2, selects either the low heat-only operation mode when ON, (see item 2. below) or adaptive heating mode when OFF, in response to a call for heat. (See Fig. 33.) When the W2 thermostat terminal is energized, it will always cause high-heat operation when the R to W circuit is closed, regardless of the setting of the low-heat only switch.

This furnace can operate as a two-stage furnace with a single-stage thermostat because furnace control CPU includes a programmed adaptive sequence of controlled operation, which selects low-heat or high-heat operation. This selection is based upon the stored history of the length of previous gas heating periods of the single-stage thermostat.

The furnace will start up in either low- or high-heat. If the furnace starts up in low-heat, the furnace control CPU determines the low-heat on time (from 0 to 16 minutes) which is permitted before switching to high-heat.

If power is interrupted, the stored history is erased. When this happens, the control CPU will initially select low-heat for up to 16 minutes and then switch to high-heat, as long as the thermostat continues to call for heat. Subsequent selection is based on stored history of thermostat cycle times.

The wall thermostat "calls for heat," closing the R to W circuit. The furnace control CPU performs a self-check, verifies the low-heat and high-heat pressure switch contacts LPS and HPS are open.

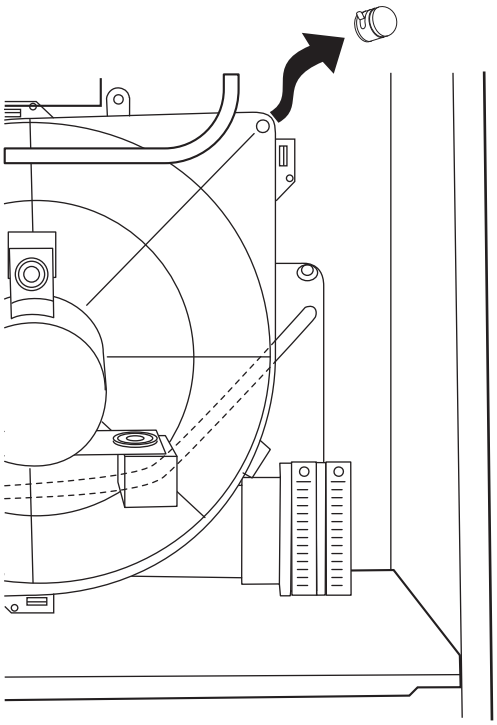

A06456

Fig. 41 - Inducer Housing Drain Tube

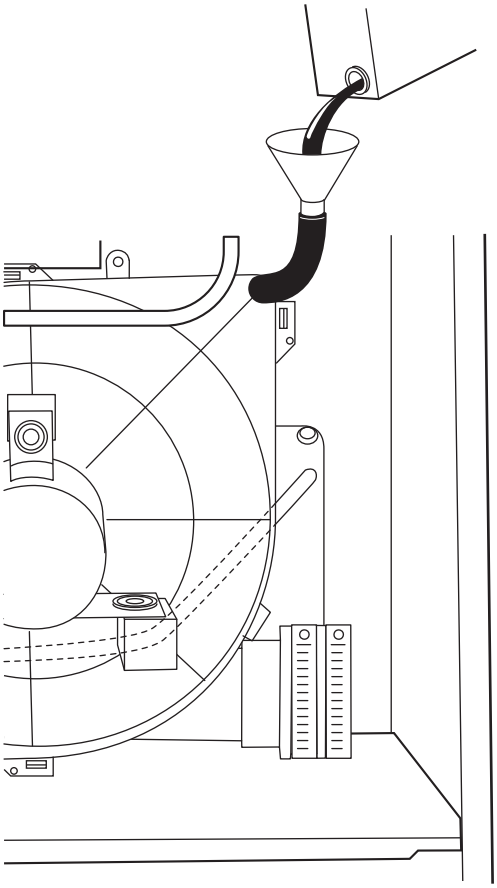

A06457

Fig. 42 - Filling Condensate Trap

Table 10 – Blower Off Delay Setup Switch Position

DESIRED HEATING MODE BLOWER OFF DELAY (SEC)	SETUP SWITCH (SW1–7 AND SW1–8) POSITION	
	SW1–7	SW1–8
90	OFF	OFF
120	ON	OFF
150	OFF	ON
180	ON	ON

1. **Inducer Prepurge Period**-The furnace control CPU turns on inducer motor IDM and slowly increases the inducer motor speed. When the low-heat pressure switch LPS closes, inducer motor RPM is noted by the furnace control CPU, and a 25-sec. prepurge period begins. The RPM is used to evaluate vent system resistance. This evaluation is then used to determine the required RPM necessary to operate the inducer motor during the low-heat prepurge period and low-heat mode.

NOTE: The heat cycle can start in either high-or low-heat. If a high-heat cycle is initiated, the furnace control CPU will deenergize the high-heat pressure switch relay HPSR to close the NC contact and continues to increase the inducer motor speed after the low-heat pressure switch LPS closes. When the high-heat pressure switch closes, inducer motor RPM is noted by the furnace control CPU before the 25-sec prepurge period begins. The RPM is used to evaluate vent system resistance. This evaluation is then used to determine the required RPM necessary to operate the inducer motor in high-heat mode.

2. **Igniter Warm-Up**-At end of the prepurge period, the Hot Surface Igniter HSI is energized for a 17-sec igniter warm-up period.
3. **Trial-For-Ignition Sequence**-When the igniter warm-up period is completed, the main gas valve relay contacts GVR close to energize the gas valve GV, the gas valve opens. The gas valve GV permits gas flow to the burners where it is ignited by the Hot Surface Igniter HSI. Five seconds after the GVR closes, a 2-second flame period begins. The HSI igniter will remain energized until the flame is sensed or until the 2-second flame proving period begins.
   If the furnace control CPU selects high-heat operation, the high-heat gas valve solenoid GV-HI is also energized.
4. **Flame-Proving**-When burner flame is proved at the flame proving sensor electrode FSE, the furnace control CPU begins the blower-ON delay period and continues to hold the gas valve GV-M open. If the burner flame is not proved within two seconds, the control CPU will close the gas valve GV-M, and the furnace control CPU will repeat the ignition sequence for up to three more Trials-For-Ignition before going to Ignition-Lockout. **Lockout will be reset** automatically after three hours, by momentarily interrupting 115 vac power to the furnace, or by interrupting 24 vac power at SEC1 or SEC2 to the furnace control CPU (not at W/W1, G, R, etc.).
   If flame is proved when flame should not be present, the furnace control CPU will lock out of Gas-Heating mode and operate the inducer motor IDM on high speed until flame is no longer proved.
5. **Inducer Speed Change**-If the cycle starts in low-heat, the furnace control CPU reduces the inducer speed slightly after flame sense. If cycle starts in high-heat, the furnace control CPU increases the inducer speed 15 seconds after flame sense. The reduction in speed in low-heat is to optimize combustion for maximum efficiency.
6. **Blower-On delay**-If the burner flame is proven, the blower-ON delay for low-heat and high-heat are as fol-

lows:
Low-heat-30 seconds after the gas valve GV-M is opened, the BLWM is turned ON at low-heat airflow.
High-heat-35 seconds after gas valve GV-M is opened, the BLWM is turned ON at high-heat airflow.
Simultaneously, the humidifier terminal HUM and electronic air cleaner terminal EAC-1 are energized and remain energized throughout the heating cycle.

7. **Switching From Low- To High- Heat-** If the furnace control CPU switches from low-heat to high-heat, the furnace control CPU will de-energize the the high-heat pressure switch relay HPSR to close the NC contact and slowly increase the inducer motor speed until the high-heat pressure switch HPS closes. When the high-heat pressure switch HPS closes, the high-heat gas valve solenoid GV-HI is energized and the inducer motor RPM is noted by the furnace control CPU. The RPM is used to evaluate vent system resistance. This evaluation is then used to determine the required RPM necessary to operate the inducer motor in high-heat mode. The blower motor BLWM will transition to high-heat airflow five seconds after the furnace control CPU switches from low-heat to high-heat.
8. **Switching From High- To Low- Heat-**The furnace control CPU will not switch from high-heat to low-heat while the thermostat R-to-W circuit is closed when using a single-stage thermostat.
9. **Blower-Off delay-** When the thermostat is satisfied, the R to W circuit is opened, de-energizing the gas valve GV-M, stopping gas flow to the burners, and de-energizing the humidifier terminal HUM. The inducer motor IDM will remain energized for a 15-second post-purge period. The blower motor BLWM and air cleaner terminal EAC-1 will remain energized at low-heat airflow or transition to low-heat airflow for 90, 120, 150, or 180 seconds (depending on selection at blower-OFF delay switches). The furnace control CPU is factory-set for a 120-second blower-OFF delay.

TWO-STAGE THERMOSTAT AND TWO-STAGE HEATING

See Fig. 49 for thermostat connections.

NOTE: In this mode, the low-heat only switch SW1-2 must be ON to select the low-heat only operation mode in response to closing the thermostat R-to-W1 circuit. Closing the thermostat R-to-W1-and-W2 circuits always causes high-heat operation, regardless of the setting of the low-heat-only switch.

The wall thermostat "calls for heat," closing the R toW1 circuit for low-heat or closing the R to W1-and-W2 circuits for high-heat. The furnace control performs a self-check and verifies the low heat and high-heat pressure switch contacts LPS and HPS are open.
The start-up and shutdown functions and delays described in item 1. above apply to 2-stage heating mode as well, except for switching from low- to high-heat and vice versa.

1. **Switching From Low- To High- Heat-**If the thermostat R to W1 circuit is closed and the R to W2 circuit closes, the furnace control CPU will de-energize the high-heat pressure switch relay HPSR to close the NC contact and slowly increase the inducer motor speed until the high-heat pressure switch HPS closes. When the high-heat pressure switch closes, the high-heat gas valve solenoid GV-HI is energized and the inducer motor RPM is noted by the furnace control CPU. The RPM is used to evaluate vent system resistance. This evaluation is then used to determine the required RPM necessary to operate the inducer motor in high-heat mode. The blower motor BLWM will transition to high-heat airflow five seconds after the R to W2 circuit closes.
2. **Switching From High- To Low- Heat-** If the thermostat R to W2 circuit opens, and the R to W1 circuit remains closed, the furnace control CPU will energize the high-heat pressure switch relay HPSR to open the NC contact and slowly decrease the inducer motor speed to the required low-heat RPM. When the high-heat pressure switch HPS opens, the high-heat gas valve solenoid GV-HI is de-energized. When the inducer motor IDM reduces pressure sufficiently, the high-heat pressure switch HPS will open. The gas valve solenoid GV-M will remain energized as long as the low-heat pressure switch LPS remains closed. The blower motor BLWM will transition to low-heat airflow five seconds after the R to W2 circuit opens.

Cooling Mode

The thermostat "calls for cooling."

1. **Single-Speed Cooling**
(See Fig. 19 for thermostat connections.)
The thermostat closes R-to-G-and-Y circuits. The R-to-Y circuit starts the outdoor unit, and R-to-G-and-Y/Y2 circuits start the furnace blower motor BLWM on cooling airflow. Cooling airflow is based on the A/C selection shown in Fig. 39.
The electronic air cleaner terminal EAC-1 is energized with 115-v when blower motor BLWM is operating.
When the thermostat is satisfied, the R-to-G-and-Y circuits are opened. The outdoor unit will stop, and furnace blower motor BLWM will continue operating at cooling airflow for an additional 90 sec. Jumper Y/Y2 to DHUM to reduce the cooling off-delay to 5 seconds. (See Fig. 33.)
2. **Single-Stage Thermostat and Two-Speed Cooling (Adaptive Mode)**
(See Fig. 50 for thermostat connections.)
This furnace can operate a two-speed cooling unit with a single-stage thermostat because the furnace control CPU includes a programmed adaptive sequence of controlled operation, which selects low-cooling or high-cooling operation. This selection is based upon the stored history of the length of previous cooling period of the single-stage thermostat.

NOTE: The air conditioning relay disable jumper ACRDJ must be connected to enable the adaptive cooling mode in response to a call for cooling. (See Fig. 33.) When in place the furnace control CPU can turn on the air conditioning relay ACR to energize the Y/Y2 terminal and switch the outdoor unit to high-cooling.

The furnace control CPU can start up the cooling unit in either low- or high-cooling. If starting up in low-cooling, the furnace control CPU determines the low-cooling on-time (from 0 to 20 minutes) which is permitted before switching to high-cooling.
If the power is interrupted, the stored history is erased and the furnace control CPU will select low-cooling for up to 20 minutes and then energize the air conditioning relay ACR to energize the Y/Y2 terminal and switch the outdoor unit to high-cooling, as long as the thermostat continues to call for cooling. Subsequent selection is based on stored history of the thermostat cycle times.
The wall thermostat "calls for cooling," closing the R to G-and-Y circuits. The R to Y1 circuit starts the outdoor unit on low-cooling speed, and the R to G-and-Y1 circuits starts the furnace blower motor BLWM at low-cooling airflow which is the true on-board CF selection as shown in Fig. 39.
If the furnace control CPU switches from low-cooling to high-cooling, the furnace control CPU will energize the air conditioning relay ACR. When the air conditioning relay ACR is energized the R to Y1-and-Y2 circuits switch the outdoor unit to high-cooling speed, and the R to G-and-Y1-and-Y/Y2 circuits transition the furnace blower motor BLWM to high cooling airflow.

High-cooling airflow is based on the A/C selection shown in Fig. 39.

NOTE: When transitioning from low-cooling to high-cooling the outdoor unit compressor will shut down for 1 minute while the furnace blower motor BLWM transitions to run at high-cooling airflow.

The electronic air cleaner terminal EAC-1 is energized with 115 vac whenever the blower motor BLWM is operating.

When the thermostat is satisfied, the R to G-and-Y circuit are opened. The outdoor unit stops, and the furnace blower BLWM and electronic air cleaner terminal EAC-1 will remain energized for an additional 90 seconds. Jumper Y1 to DHUM to reduce the cooling off-delay to 5 seconds. (See Fig. 33.)

3. **Two-Stage Thermostat and Two-Speed Cooling**
(See Fig. 49 for thermostat connections)

NOTE: The air conditioning relay disable jumper ACRDJ must be disconnected to allow thermostat control of the outdoor unit staging. (See Fig. 33.)

The thermostat closes the R to G and-Y1 circuits for low cooling or closes the R to G and-Y1-and-Y2 circuits for high-cooling. The R to Y1 circuit starts the outdoor unit on low-cooling speed, and the R to G-and-Y1 circuit starts the furnace blower motor BLWM on low-cooling airflow which is the true on-board CF selection as shown in Fig. 41. The R to Y1-and-Y2 circuits start the outdoor unit on high-cooling speed, and the R to G-and-Y/Y2 circuits start the furnace blower motor BLWM at high-cooling airflow. High-cooling airflow is based on the A/C selection shown in Fig. 39.

The electronic air cleaner terminal EAC-1 is energized with 115 vac whenever the blower motor BLWM is operating.

When the thermostat is satisfied, the R to G-and-Y1 or R to G-and-Y1-and-Y2 circuits are opened. The outdoor unit stops, and the furnace blower BLWM and electronic air cleaner terminal EAC-1 will remain energized for an additional 90 seconds. Jumper Y1 to DHUM to reduce the cooling off-delay to 5 seconds. (See Fig. 33.)

Thermidistat Mode

See Fig. 43-46 for Thermidistat connections.

The dehumidification output, DHUM on the Thermidistat should be connected to the furnace control thermostat terminal DHUM. When there is a dehumidify demand, the DHUM input is activated, which means 24 vac signal is removed from the DHUM input terminal. In other words, the DHUM input logic is reversed. The DHUM input is turned ON when no dehumidify demand exists. Once 24 vac is detected by the furnace control on the DHUM input, the furnace control operates in Thermidistat mode. If the DHUM input is low for more than 48 hours, the furnace control reverts back to non-Thermidistat mode.

The cooling operation described in item 3. above applies to operation with a Thermidistat. The exceptions are listed below:

1. **Low cooling**-When the R to G-and-Y1 circuit is closed and there is a demand for dehumidification, the furnace blower motor BLWM will drop the blower airflow to 86% of low-cooling airflow which is the true on-board CF selection as shown in Fig. 39.
2. **High cooling**-When the R to G-and Y/Y2 circuit is closed and there is a demand for dehumidification, the furnace blower motor BLWM will drop the blower airflow to 86% of high-cooling airflow. High-cooling airflow is based on the A/C selection shown in Fig. 39.
3. **Cooling off-delay**-When the "call for cooling" is satisfied and there is a demand for dehumidification, the cooling blower-off delay is decreased from 90 seconds to 5 seconds.

Super-Dehumidify Mode

Super-Dehumidify mode can only be entered if the furnace control is in Thermidistat mode and there is a demand for dehumidification. The cooling operation described in item 3. above also applies to operation with a Thermidistat. The exceptions are listed below:

1. **Low cooling**-When the R to Y1 circuit is closed, R to G circuit is open, and there is a demand for dehumidification, the furnace blower motor BLWM will drop the blower airflow to 65% of low-cooling airflow for a maximum of 10 minutes each cooling cycle or until the R to G circuit closes or the demand for dehumidification is satisfied. Low-cooling airflow is the true on-board CF selection as shown in Fig. 39.
2. **High cooling**-When the R to Y/Y2 circuit is closed, R to G circuit is open, and there is a demand for dehumidification, the furnace blower motor BLWM will drop the blower to 65% of high-cooling airflow for a maximum of 10 minutes each cooling cycle or until the R to G circuit closes or the demand for dehumidification is satisfied. High-cooling airflow is based on the A/C selection shown in Fig. 39.
3. **Cooling off-delay**-When the "call for cooling" is satisfied and there is a demand for dehumidification, the cooling blower-off delay is decreased from 90 seconds to 5 seconds.

Continuous Blower Mode

When the R to G circuit is closed by the thermostat, the blower motor BLWM will operate at continuous-blower airflow. Continuous blower airflow selection is initially based on the CF selection shown in Fig. 39. Factory default is shown in Fig. 39. Terminal EAC-1 is energized as long as the blower motor BLWM is energized.

During a call for heat, the blower BLWM will transition the blower motor BLWM to continuous blower airflow, low-heat airflow, or the midrange airflow, whichever is lowest. The blower motor BLWM will remain ON until the main burners ignite then shut OFF and remain OFF for the blower-ON delay (30 seconds in low-heat and 35 seconds in high-heat) allowing the furnace heat exchangers to heat more quickly, then restarts at the end of the blower-ON delay period at low-heat or high-heat airflow respectively.

The blower motor BLWM will revert to continuous-blower airflow after the heating cycle is completed. In high-heat, the furnace control CPU will drop the blower motor BLWM to low-heat airflow during the selected blower-OFF delay period before transitioning to continuous-blower airflow.

When the thermostat "calls for high-cooling," the blower motor BLWM will operate at high-cooling airflow. When the thermostat is satisfied, the blower motor BLWM will operate an additional 90 seconds at high-cooling airflow before transitioning back to continuous-blower airflow.

When the R to G circuit is opened, the blower motor BLWM will continue operating for an additional 5 seconds, if no other function requires blower motor BLWM operation.

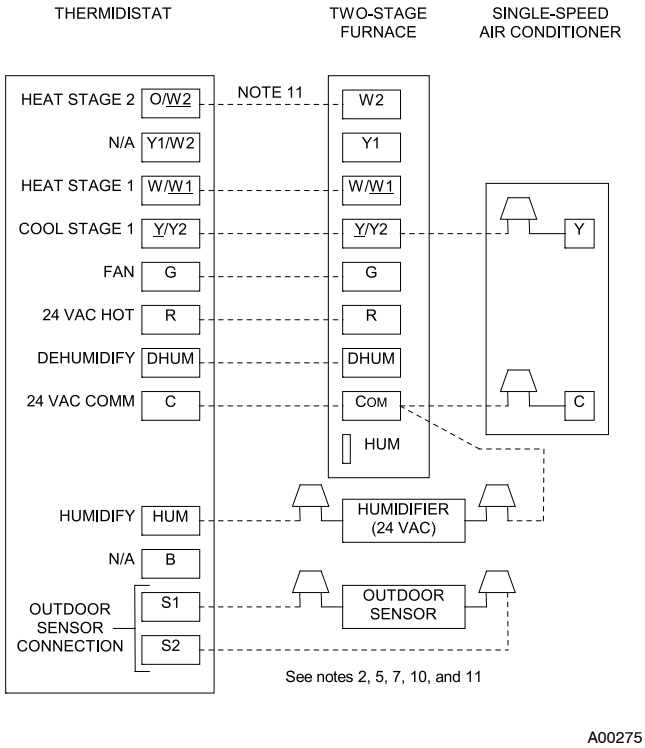

Fig. 43 - Two-Stage Furnace with Single-Speed Air Conditioner

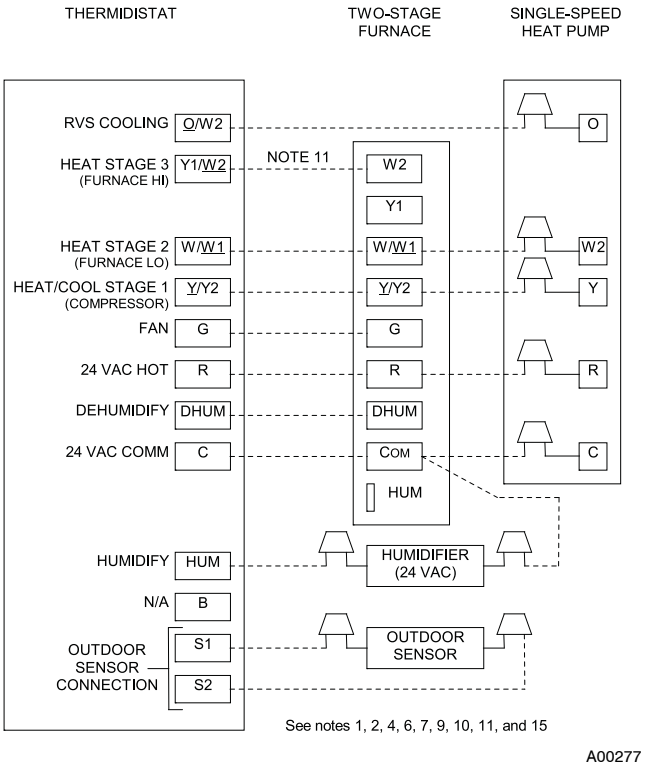

Fig. 45 - Two-Stage Furnace with Single-Speed Heat Pump (Dual Fuel)

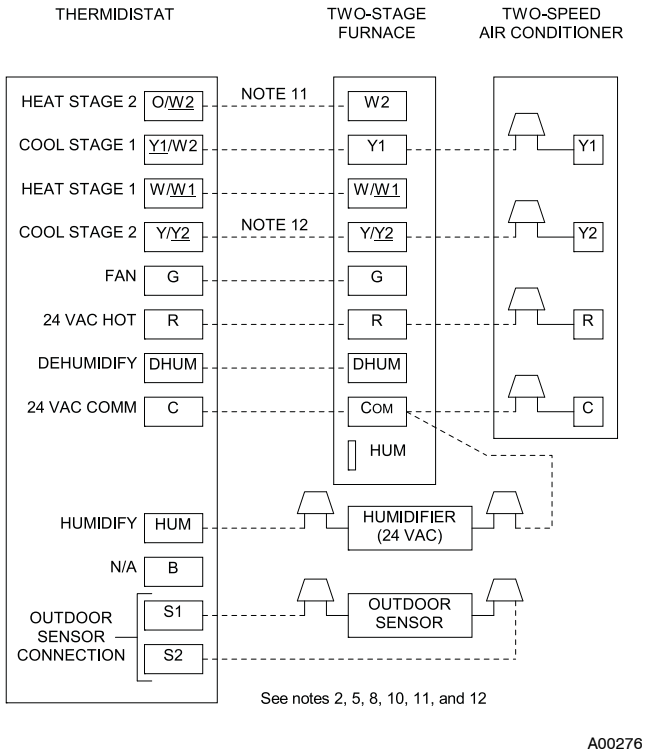

Fig. 44 - Two-Stage Furnace with Two-Speed Air Conditioner

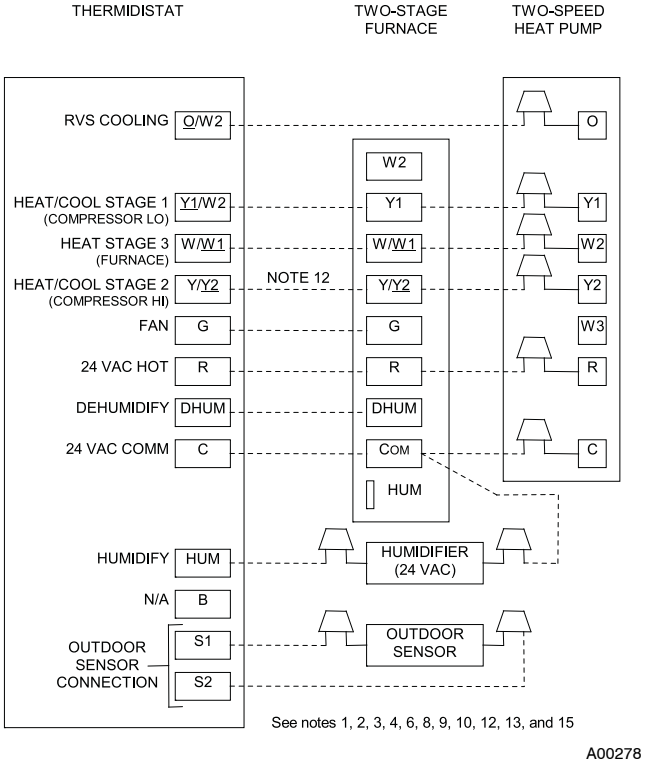

Fig. 46 - Two-Stage Furnace with Two-Speed Heat Pump (Dual Fuel)

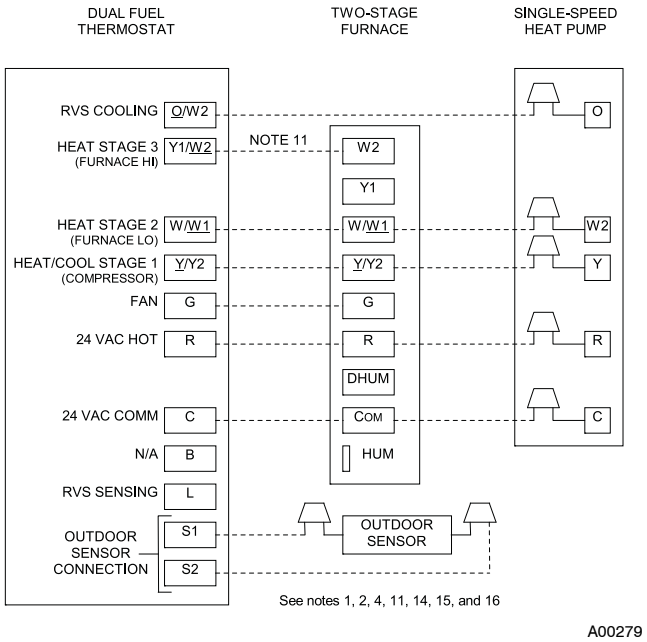

Fig. 47 - Dual Fuel Thermostat with Two-Stage Furnace and Single-Speed Heat Pump

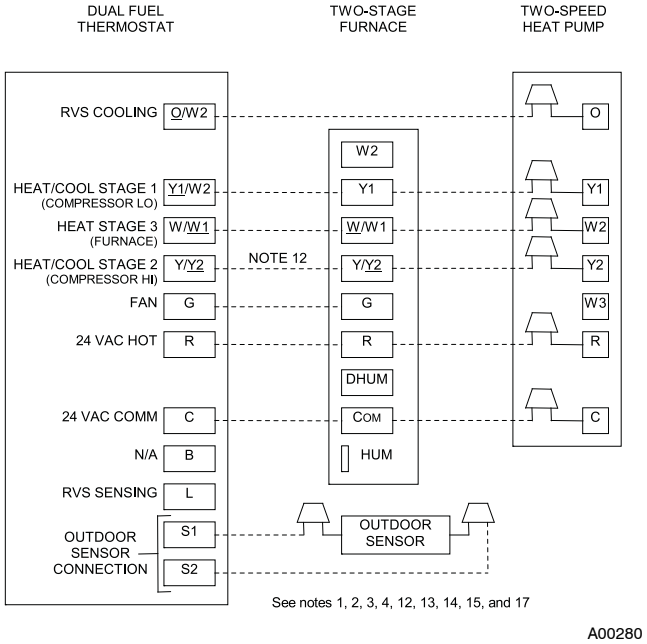

Fig. 48 - Dual Fuel Thermostat With Two-Stage Furnace and Two-Speed Heat Pump

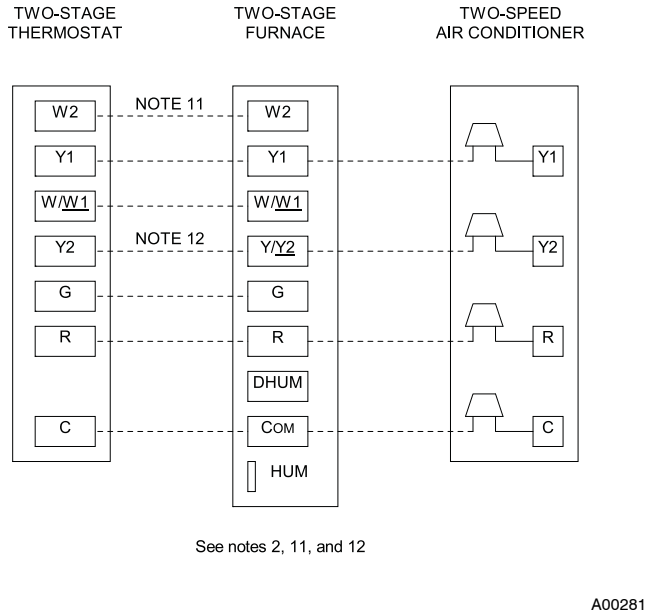

Fig. 49 - Two-Stage Thermostat With Two-Stage Furnace and Two-Speed Air Conditioner

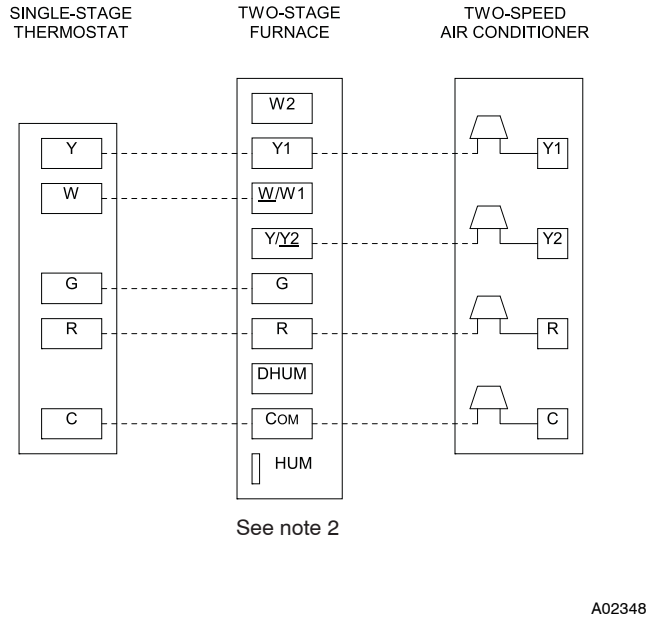

Fig. 50 - Single-Stage Thermostat With Two-Stage Furnace and Two-Speed Air Conditioner

NOTES FOR FIG. 43-50:

1. Heat pump MUST have a high pressure switch for dual fuel applications.
2. Refer to outdoor equipment Installation Instructions for additional information and setup procedure.
3. Select the “ZONE” position on the two-speed heat pump control.
4. Outdoor Air Temperature Sensor must be attached in all dual fuel applications.
5. Dip switch No.1 on Thermidistat should be set in **OFF** position for air conditioner installations. This is factory default.
6. Dip switch No. 1 on Thermidistat should be set in **ON** position for heat pump installations.
7. Dip switch No. 2 on Thermidistat should be set in **OFF** position for single-speed compressor operation. This is factory default.
8. Dip switch No. 2 on Thermidistat should be set in **ON** position for two-speed compressor operation.
9. Configuration Option No. 10 “Dual Fuel Selection” must be turned **ON** in all dual fuel applications.
10. **NO** connection should be made to the furnace HUM terminal when using a Thermidistat.
11. Optional connection. If wire is connected, dip switch SW1-2 on furnace control should be set in ON position to allow Thermidistat/ Thermostat to control furnace staging.
12. Optional connection. If wire is connected, ACRDJ jumper on furnace control should be removed to allow Thermidistat/Thermostat to control outdoor unit staging.
13. Furnace must control its own high-stage heating operation via furnace control algorithm. This is factory default.
14. The RVS Sensing terminal “L” should not be connected. This is internally used to sense defrost operation.
15. **DO NOT SELECT** the “FURNACE INTERFACE” or “BALANCE POINT” option on the two-speed heat pump control board. This is controlled internally by the Thermidistat/Dual Fuel Thermostat.
16. Dip switch D on Dual Fuel Thermostat should be set in **OFF** position for single-speed compressor operation. This is factory default.
17. Dip switch D on Dual Fuel Thermostat should be set in **ON** position for two-speed compressor operation.

CONTINUOUS BLOWER SPEED SELECTION FROM THERMOSTAT

To select different continuous-blower speeds from the room thermostat, momentarily turn off the FAN switch or push button on the room thermostat for 1-3 seconds after the blower motor BLWM is operating. The furnace control CPU will shift the continuous-blower airflow from the factory setting to the next highest CF selection airflow as shown in Fig. 39. Momentarily turning off the FAN switch again at the thermostat will shift the continuous-blower airflow up one more increment. If you repeat this procedure enough, you will eventually shift the continuous-blower airflow to the lowest CF selection as shown in Fig. 39. The selection can be changed as many times as desired and is stored in the memory to be automatically used following a power interruption.

This feature is disabled when blower off delay is set for 180 sec.

Heat Pump

See Fig. 45-48 for thermostat connections.

When installed with a heat pump, the furnace control automatically changes the timing sequence to avoid long blower off times during demand defrost cycles. Whenever W/W1 is energized along with Y1 or Y/Y2, the furnace control CPU will transition to or bring on the blower motor BLWM at cooling airflow, low-heat airflow, or the midrange airflow, whichever is the lowest. The blower motor BLWM will remain on until the main burners ignite, then shut OFF and remain OFF for 25 seconds before coming back on at heating airflow. When the W/W1 input signal disappears, the furnace control begins a normal inducer post-purge period while changing the blower airflow. If Y/Y2 input is still energized, the furnace control CPU will transition the blower motor BLWM airflow to cooling airflow. If Y/Y2 input signal disappears and the Y1 input is still energized, the furnace control CPU will transition the blower motor BLWM to low-cooling airflow. If both the Y1 and Y/Y2 signals disappear at the same time, the blower motor BLWM will remain on at low-heat airflow for the selected blower-OFF delay period. At the end of the blower-OFF delay, the blower motor BLWM will shut OFF unless G is still energized, in which case the blower motor BLWM will operate at continuous blower airflow.

Component Test

The furnace features a component test system to help diagnose a system problem in the case of a component failure. To initiate the component test procedure, ensure that there are no thermostat inputs to the control and all time delays have expired. Turn on setup switch SW1-6 (See Fig. 33.)

NOTE: The component test feature will not operate if the control is receiving any thermostat signals or until all time delays have expired.

The component test sequence is as follows:

1. The furnace control CPU turns the inducer motor IDM ON at medium speed and keeps it ON through Step 3.
2. After waiting 15 seconds, the furnace control CPU turns the hot surface igniter ON for 15 seconds, then OFF.
3. The furnace control CPU then turns the blower motor BLWM ON at midrange airflow for 15 seconds, then OFF.
4. After shutting the blower motor BLWM OFF, the furnace control CPU shuts the inducer motor IDM OFF.

NOTE: The EAC terminals are energized when the blower is operating.

After the component test is completed, 1 or more status codes (11, 25, 41, or 42) will flash. See Service Label on blower access panel or Service/Status Code Instructions for explanation of status codes.

NOTE: To repeat component test, turn setup switch SW1-6 to OFF and then back ON.

ADJUSTMENTS

Set Gas Input Rate

Furnace gas input rate on rating plate is for installations at altitudes up to 2000 ft. (610 M).

In the U.S.A., the input rating for altitudes above 2000 ft. (610 M) must be reduced by 2 percent for each 1000 ft. (305 M) above sea level.

In Canada, the input rating must be derated by 5 percent for altitudes of 2000 - 4500 ft. (610 - 1372 M) above sea level.

Adjust manifold pressure to obtain input rate.

Furnace input rate must be within ±2 percent of input rate on furnace rating plate.

1. Determine natural gas orifice size and manifold pressure for correct input.
   a. Obtain average heat value (at installed altitude) from local gas supplier.
   b. Obtain average specific gravity from local gas supplier.
   c. Verify furnace model. Table 11 can only be used for model 58UVB Furnaces.
   d. Find installation altitude in Table 11.

NOTE: For Canadian altitudes of 2000 - 4500 ft. (610 -1372 M), use U.S.A. altitudes of 2001 to 3000 ft. (610 - 914 M) in Table 11.

   e. Find closest natural gas heat value and specific gravity in Table 11.
   f. Follow heat value and specific gravity lines to point of intersection to find orifice size and low- and high-heat manifold pressure settings for proper operation.

EXAMPLE: (0 - 2000 ft. / 610 M altitude)
Heating value = 1050 Btu/cu ft
Specific gravity = 0.62
Therefore: Orifice No. 45
Manifold pressure: 3.8-in. wc for high heat
1.6-in. wc for low heat

* Furnace is shipped with No. 45 orifices. In this example, all main burner orifices are the correct size and do not need to be changed to obtain proper input rate.

   g. Check and verify burner orifice size in furnace. NEVER ASSUME ORIFICE SIZE; ALWAYS CHECK AND VERIFY.

2. Adjust manifold pressure to obtain input rate.
   a. Remove burner enclosure front.

NOTE: Manifold pressure MUST always be measured with the burner box cover REMOVED.

   b. Remove regulator seal caps that conceal adjustment screws for low- and high-heat gas valve regulators. (See Fig 51.)
   c. Move setup switch SW1-2 on control center to ON position. (See Fig. 33.) This keeps furnace locked in low-heat operation.
   d. Jumper R and W/W1 thermostat connections on control to start furnace.
   e. Turn low-heat adjusting screw counterclockwise (out) to decrease input rate or clockwise (in) to increase input rate.

NOTE: DO NOT set low-heat manifold pressure less than 1.3-in. wc or more than 1.7-in. wc for natural gas. If manifold pressure is outside this range, change main burner orifices to obtain manifold pressure in this range.

Table 11 – Orifice Size* and Manifold Pressures for Gas Input Rate
(Tabulated Data Based on 20,000 Btuh High-Heat/13,000 Btuh Low-Heat Per Burner,
Derated 2%/1,000 Ft. (305 M) Above Sea Level)

ALTITUDE RANGE ft (m)		AVG. GAS HEAT VALUE AT ALTITUDE (Btu/cu ft)	SPECIFIC GRAVITY OF NATURAL GAS							
			0.58		0.60		0.62		0.64	
			Orifice No.	Mnfld Press High/Low	Orifice No.	Mnfld Press High/Low	Orifice No.	Mnfld Press High/Low	Orifice No.	Mnfld Press High/Low
U.S.A. and Canada		900	43	3.5 / 1.5	43	3.6 / 1.5	43	3.8 / 1.6	42	3.2 / 1.3
	0	925	44	3.8 / 1.6	43	3.5 / 1.5	43	3.6 / 1.5	43	3.7 / 1.6
	(0)	950	44	3.6 / 1.5	44	3.8 / 1.6	43	3.4 / 1.4	43	3.5 / 1.5
		975	44	3.4 / 1.5	44	3.6 / 1.5	44	3.7 / 1.6	44	3.8 / 1.6
	to	1000	44	3.3 / 1.4	44	3.4 / 1.4	44	3.5 / 1.5	44	3.6 / 1.5
		1025	**45**	**3.8 / 1.6**	44	3.2 / 1.4	44	3.3 / 1.4	44	3.4 / 1.5
	2000	1050	**45**	**3.6 / 1.5**	**45**	**3.7 / 1.6**	**45**	**3.8 / 1.6**	44	3.3 / 1.4
	(610)	1075	**45**	**3.4 / 1.4**	**45**	**3.5 / 1.5**	**45**	**3.7 / 1.5**	**45**	**3.8 / 1.6**
		1100	**45**	**3.3 / 1.4**	**45**	**3.4 / 1.4**	**45**	**3.5 / 1.5**	**45**	**3.6 / 1.5**
U.S.A. and Canada	U.S.A.	800	43	3.8 / 1.6	42	3.2 / 1.4	42	3.3 / 1.4	42	3.5 / 1.5
	2001 (611)	825	43	3.6 / 1.5	43	3.7 / 1.6	43	3.8 / 1.6	42	3.2 / 1.4
	to	850	43	3.4 / 1.4	43	3.5 / 1.5	43	3.6 / 1.5	43	3.7 / 1.6
	3000 (914)	875	44	3.7 / 1.5	44	3.8 / 1.6	43	3.4 / 1.4	43	3.5 / 1.5
		900	44	3.5 / 1.5	44	3.6 / 1.5	44	3.7 / 1.6	44	3.8 / 1.6
	Canada	925	44	3.3 / 1.4	44	3.4 / 1.4	44	3.5 / 1.5	44	3.6 / 1.5
	2001 (611)	950	**45**	**3.7 / 1.6**	44	3.2 / 1.4	44	3.3 / 1.4	44	3.4 / 1.4
	to	975	**45**	**3.6 / 1.5**	**45**	**3.7 / 1.6**	**45**	**3.8 / 1.6**	44	3.2 / 1.4
	4500 (1372)	1000	**45**	**3.4 / 1.4**	**45**	**3.5 / 1.5**	**45**	**3.6 / 1.5**	**45**	**3.7 / 1.6**
U.S.A. Only		775	43	3.7 / 1.6	42	3.2 / 1.3	42	3.3 / 1.4	42	3.4 / 1.4
	3001	800	43	3.5 / 1.5	43	3.6 / 1.5	43	3.8 / 1.6	42	3.2 / 1.3
	(915)	825	44	3.8 / 1.6	43	3.4 / 1.4	43	3.5 / 1.5	43	3.7 / 1.5
	to	850	44	3.6 / 1.5	44	3.7 / 1.6	44	3.8 / 1.6	43	3.4 / 1.5
		875	44	3.4 / 1.4	44	3.5 / 1.5	44	3.6 / 1.5	44	3.7 / 1.6
	4000	900	44	3.2 / 1.3	44	3.3 / 1.4	44	3.4 / 1.4	44	3.5 / 1.5
	(1219)	925	**45**	**3.7 / 1.5**	**45**	**3.8 / 1.6**	44	3.2 / 1.4	44	3.3 / 1.4
		950	**45**	**3.5 / 1.5**	**45**	**3.6 / 1.5**	**45**	**3.7 / 1.6**	**45**	**3.8 / 1.6**
U.S.A. Only		750	43	3.7 / 1.6	43	3.8 / 1.6	42	3.2 / 1.4	42	3.3 / 1.4
	4001	775	43	3.5 / 1.5	43	3.6 / 1.5	43	3.7 / 1.6	43	3.8 / 1.6
	(1220)	800	44	3.7 / 1.6	43	3.4 / 1.4	43	3.5 / 1.5	43	3.6 / 1.5
	to	825	44	3.5 / 1.5	44	3.6 / 1.5	44	3.7 / 1.6	43	3.4 / 1.4
		850	44	3.3 / 1.4	44	3.4 / 1.4	44	3.5 / 1.5	44	3.6 / 1.5
	5000	875	**45**	**3.8 / 1.6**	44	3.2 / 1.4	44	3.3 / 1.4	44	3.4 / 1.5
	(1524)	900	**45**	**3.6 / 1.5**	**45**	**3.7 / 1.6**	**45**	**3.8 / 1.6**	44	3.2 / 1.4
		925	**45**	**3.4 / 1.4**	**45**	**3.5 / 1.5**	**45**	**3.6 / 1.5**	**45**	**3.7 / 1.6**
U.S.A. Only		725	43	3.6 / 1.5	43	3.8 / 1.6	42	3.2 / 1.4	42	3.3 / 1.4
	5001	750	43	3.4 / 1.4	43	3.5 / 1.5	43	3.6 / 1.5	43	3.8 / 1.6
	(1525)	775	44	3.7 / 1.5	44	3.8 / 1.6	43	3.4 / 1.4	43	3.5 / 1.5
	to	800	44	3.4 / 1.5	44	3.6 / 1.5	44	3.7 / 1.6	44	3.8 / 1.6
		825	44	3.2 / 1.4	44	3.3 / 1.4	44	3.4 / 1.5	44	3.6 / 1.5
	6000	850	**45**	**3.7 / 1.6**	**45**	**3.8 / 1.6**	44	3.2 / 1.4	44	3.4 / 1.4
	(1829)	875	**45**	**3.5 / 1.5**	**45**	**3.6 / 1.5**	**45**	**3.7 / 1.6**	**45**	**3.8 / 1.6**
		900	**45**	**3.3 / 1.4**	**45**	**3.4 / 1.4**	**45**	**3.5 / 1.5**	**45**	**3.6 / 1.5**
U.S.A. Only		675	42	3.2 / 1.3	42	3.3 / 1.4	42	3.4 / 1.4	42	3.5 / 1.5
	6001	700	43	3.6 / 1.5	43	3.7 / 1.6	43	3.8 / 1.6	42	3.3 / 1.4
	(1830)	725	44	3.8 / 1.6	43	3.5 / 1.5	43	3.6 / 1.5	43	3.7 / 1.6
	to	750	44	3.6 / 1.5	44	3.7 / 1.6	44	3.8 / 1.6	43	3.5 / 1.5
		775	44	3.4 / 1.4	44	3.5 / 1.5	44	3.6 / 1.5	44	3.7 / 1.6
	7000	800	**45**	**3.8 / 1.6**	44	3.3 / 1.4	44	3.4 / 1.4	44	3.5 / 1.5
	(2133)	825	**45**	**3.6 / 1.5**	**45**	**3.7 / 1.6**	**45**	**3.8 / 1.6**	44	3.3 / 1.4
		850	**45**	**3.4 / 1.4**	**45**	**3.5 / 1.5**	**45**	**3.6 / 1.5**	**45**	**3.7 / 1.6**

A08376A

355BAV

Table 11 — Orifice Size* and Manifold Pressures for Gas Input Rate (Tabulated Data Based on 20,000 Btuh High-Heat/13,000 Btuh Low-Heat Per Burner, Derated 2%/1,000 Ft. (305 M) Above Sea Level) (Continued)

ALTITUDE RANGE ft (m)		AVG. GAS HEAT VALUE AT ALTITUDE (Btu/cu ft)	SPECIFIC GRAVITY OF NATURAL GAS							
			0.58		0.60		0.62		0.64	
			Orifice No.	Mnfld Press High/Low	Orifice No.	Mnfld Press High/Low	Orifice No.	Mnfld Press High/Low	Orifice No.	Mnfld Press High/Low
U.S.A. Only		**650**	43	3.8 / 1.6	42	3.2 / 1.4	42	3.4 / 1.4	42	3.5 / 1.5
	7001	**675**	43	3.5 / 1.5	43	3.7 / 1.6	43	3.8 / 1.6	42	3.2 / 1.4
	(2134)	**700**	44	3.8 / 1.6	43	3.4 / 1.4	43	3.5 / 1.5	43	3.6 / 1.5
	to	**725**	44	3.5 / 1.5	44	3.6 / 1.5	44	3.8 / 1.6	43	3.4 / 1.4
		750	44	3.3 / 1.4	44	3.4 / 1.4	44	3.5 / 1.5	44	3.6 / 1.5
	8000	**775**	**45**	**3.7 / 1.6**	44	3.2 / 1.3	44	3.3 / 1.4	44	3.4 / 1.4
	(2438)	**800**	**45**	**3.5 / 1.5**	**45**	**3.6 / 1.5**	**45**	**3.7 / 1.6**	44	3.2 / 1.4
		825	**45**	**3.3 / 1.4**	**45**	**3.4 / 1.4**	**45**	**3.5 / 1.5**	**45**	**3.6 / 1.5**
U.S.A. Only		**625**	43	3.8 / 1.6	42	3.2 / 1.4	42	3.3 / 1.4	42	3.4 / 1.5
	8001	**650**	43	3.5 / 1.5	43	3.6 / 1.5	43	3.8 / 1.6	42	3.2 / 1.3
	(2439)	**675**	44	3.7 / 1.6	43	3.4 / 1.4	43	3.5 / 1.5	43	3.6 / 1.5
	to	**700**	44	3.5 / 1.5	44	3.6 / 1.5	44	3.7 / 1.6	44	3.8 / 1.6
		725	44	3.2 / 1.4	44	3.4 / 1.4	44	3.5 / 1.5	44	3.6 / 1.5
	9000	**750**	**45**	**3.7 / 1.5**	**45**	**3.8 / 1.6**	44	3.2 / 1.4	44	3.3 / 1.4
	(2743)	**775**	**45**	**3.4 / 1.5**	**45**	**3.6 / 1.5**	**45**	**3.7 / 1.6**	**45**	**3.8 / 1.6**
U.S.A. Only	**9001**	**600**	43	3.8 / 1.6	42	3.2 / 1.4	42	3.3 / 1.4	42	3.4 / 1.4
	(2744)	**625**	43	3.5 / 1.5	43	3.6 / 1.5	43	3.7 / 1.6	43	3.8 / 1.6
	to	**650**	44	3.7 / 1.6	44	3.8 / 1.6	43	3.4 / 1.5	43	3.6 / 1.5
		675	44	3.4 / 1.4	44	3.5 / 1.5	44	3.7 / 1.5	44	3.8 / 1.6
	10000	**700**	44	3.2 / 1.3	44	3.3 / 1.4	44	3.4 / 1.4	44	3.5 / 1.5
	(3048)	**725**	**45**	**3.6 / 1.5**	**45**	**3.7 / 1.6**	**45**	**3.8 / 1.6**	44	3.3 / 1.4

* Orifice numbers shown in **BOLD** are factory-installed.

A08376B

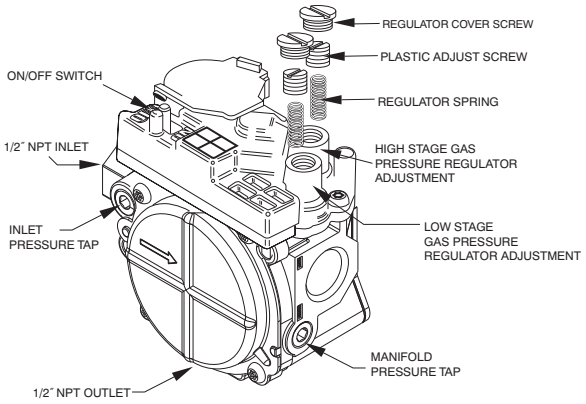

A04167

Fig. 51 - Redundant Automatic Gas Valve

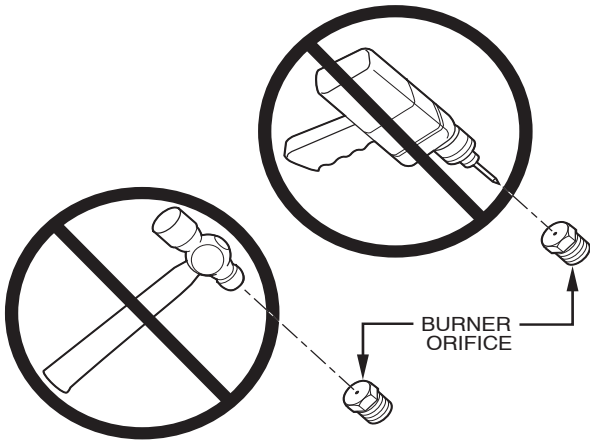

A93059

Fig. 52 - Burner Orifice

355BAV

⚠ CAUTION

UNIT DAMAGE HAZARD

Failure to follow this caution may result in reduced furnace life, property damage, personal injury, and death.

DO NOT bottom out gas valve regulator adjusting screw. This can result in unregulated manifold pressure and result in excess overfire and heat exchanger failures.

NOTE: If orifice hole appears damaged or it is suspected to have been redrilled, check orifice hole with a numbered drill bit of correct size. Never redrill an orifice. A burr-free and squarely aligned orifice hole is essential for proper flame characteristics.

f. Move setup switch SW1-2 to OFF position after completing low-heat adjustment.

g. Jumper R and W/W1 and W2 thermostat connections on furnace control. (See Fig. 33.) This keeps furnace locked in high-heat operation.

h. Turn high-heat adjusting screw counterclockwise (out) to decrease input rate or clockwise (in) to increase rate.

NOTE: DO NOT set high-heat manifold pressure less than 3.2-in. wc or more than 3.8-in. wc for natural gas. If manifold pressure is outside this range, change main burner orifices to obtain manifold pressures in this range.

i. When correct input is obtained, replace caps that conceal gas valve regulator adjustment screws. Main burner flame should be clear blue, almost transparent. (See Fig. 53.)

j. Remove jumpers R to W/W1 and R to W2

3. Verify natural gas input rate by clocking gas meter.

NOTE: Be sure all pressure tubing, combustion-air and vent pipes, and burner enclosure front are in place when checking input by clocking gas meter.

a. Calculate high-altitude adjustment (if required).
UNITED STATES
At altitudes above 2000 ft. (610 M), this furnace has been approved for a 2 percent derate for each 1000 ft. (305 M) above sea level. See Table 12 for derate multiplier factor and example.
CANADA
At installation altitudes from 2000 to 4500 ft. (610 to 1372 M), this furnace must be derated 5 percent by an authorized Gas Conversion Station or Dealer. To determine correct input rate for altitude, see example and use 0.95 as derate multiplier factor.

EXAMPLE: 100,000 BTUH HIGH-HEAT INPUT FURNACE INSTALLED AT 4,300 FT (1310 M)

Furnace Input Rate at Sea Level X Derate Multiplier Factor = Furnace Input Rate at Installation Altitude

100,000 X 0.91 = 91,000

b. Reinstall burner box cover.

NOTE: Clocking gas input rate MUST always be performed with the burner box cover INSTALLED.

c. Check that gas valve adjustment caps are in place for proper input to be clocked.

d. Obtain average heat value (at altitude) from local gas supplier.

NOTE: Be sure heating value of gas used for calculations is correct for your altitude. Consult local gas utility for altitude adjustment of gas heating value.

e. Check and verify orifice size in furnace. NEVER ASSUME THE ORIFICE SIZE. ALWAYS CHECK AND VERIFY.

f. Turn off all other gas appliances and pilots.

g. Move setup switch SW1-2 to ON position. (See Fig. 33.) This keeps furnace locked in low-heat operation.

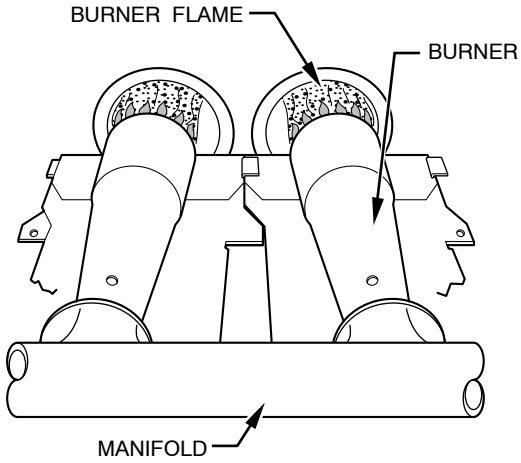

A89020

Fig. 53 - Burner Flame

Table 12 – Altitude Derate Multiplier for U.S.A.

ALTITUDE – FT (M)	PERCENT OF DERATE	DERATE MULTIPLIER FACTOR*
0–2000(0–610)	0	1.00
2001–3000 (610–914)	4–6	0.95
3001–4000 (914–1219)	6–8	0.93
4001–5000 (1219–1524)	8–10	0.91
5001–6000 1524–1829)	10–12	0.89
6001–7000 (1829–2134)	12–14	0.87
7001–8000 (2134–2438)	14–16	0.85
8001–9000 (2438–2743)	16–18	0.83
9001–10,000 (2743–3048)	18–20	0.81

* Derate multiplier factors are based on midpoint altitude for altitude range.

h. Jumper R to W/W1.

i. Let furnace run for 3 minutes in low-heat operation.

j. Measure time (in sec) for gas meter to complete 1 revolution. Note reading.

k. Refer to Table +13 for cubic ft of gas per hr.

l. Multiply gas rate cu ft/hr by heating value (Btu/cu ft).

m. Move setup switch SW1-2 to OFF position and jumper R and W/W1 and W2 thermostat connections. (See Fig. 33.) This keeps furnace locked in high-heat operation. Repeat items i through l for high-heat operation.

⚠ CAUTION

UNIT DAMAGE HAZARD

Failure to follow this caution may result in component damage due to flame impingement of burners and heat exchangers.

DO NOT redrill orifices. Improper drilling (burrs, out-of-round holes, etc.) can cause excessive burner noise and misdirection of burner flames. (See Fig. 52.)

EXAMPLE: (High-heat operation at 0 - 2000 ft. (610 M) altitude)
Furnace input from rating plate is 100,000 Btuh
Btuh heating input = Btuh/cu ft X cu ft/hr
Heating value of gas = 975 Btuh/cu ft
Time for 1 revolution of 2-cu ft dial = 70 sec
Gas rate = 103 cu ft/hr (from Table 13)
Btuh heating input = 103 X 975 = 100,425 Btuh

In this example, the orifice size and manifold pressure adjustment is within ± 2 percent of the furnace input rate.

NOTE: Measured gas inputs (high heat and low heat) must be within ±2 percent of that stated on furnace rating plate when installed at sea level or derated per that stated above when installed at higher altitudes.

n. Remove jumper across R, W/W1, and W2 thermostat connections to terminate call for heat.

Set temperature rise

⚠ CAUTION

UNIT DAMAGE HAZARD

Failure to follow this caution may result in overheating the heat exchangers or condensing flue gases in heat exchanger areas not designed for condensate.

Temperature rise must be within limits specified on unit rating plate. Operation is within a few degrees of midpoint of rise range when setup switch SW1-4 is OFF.

Furnace must operate within ranges of temperature rise specified on the furnace rating plate. Determine air temperature rise as follows:

1. Place thermometers in return and supply ducts as near furnace as possible. Be sure thermometers do not see heat exchanger so that radiant heat does not affect readings. This practice is particularly important with straight-run ducts.
2. When thermometer readings stabilize, subtract return-air temperature from supply-air temperature to determine air temperature rise.

NOTE: Temperature rise can be determined for low-heat operation by placing setup switch SW1-2 on furnace control in ON position. For high-heat operation, place setup switch SW1-2 in OFF position and jumper R-W2 on furnace control. DO NOT forget to return setup switch to OFF position and remove R-W2 jumper upon completion of testing. (See Fig. 33 for switch and terminal location.)

3. This furnace is capable of automatically providing proper airflow to maintain the temperature rise within the range specified on furnace rating plate. If temperature rise is outside this range, proceed as follows:
   a. Check gas input for low- and high-heat operation.
   b. Check derate for altitude if applicable.
   c. Check all return and supply ducts for excessive restrictions causing static pressure greater than 0.5-in. wc.
   d. Ensure Low Heat Rise Adjust switch SW1-3 on furnace control is in ON position when a bypass humidifier is used. (See Fig. 33 for switch location.)
   e. Check Troubleshooting Guide for Variable-Speed 2-Stage Electronic Condensing Furnaces Series 100.

Table 13 – Gas Rate Cu Ft/Hr

SECONDS FOR 1 REVOLUTION	SIZE OF TEST DIAL 1 cu ft	2 cu ft	5 cu ft	SECONDS FOR 1 REVOLUTION	SIZE OF TEST DIAL 1 cu ft	2 cu ft	5 cu ft
10	360	720	1800	50	72	144	360
11	327	655	1636	51	71	141	355
12	300	600	1500	52	69	138	346
13	277	555	1385	53	68	136	340
14	257	514	1286	54	67	133	333
15	240	480	1200	55	65	131	327
16	225	450	1125	56	64	129	321
17	212	424	1059	57	63	126	316
18	200	400	1000	58	62	124	310
19	189	379	947	59	61	122	305
20	180	360	900	60	60	120	300
21	171	343	857	62	58	116	290
22	164	327	818	64	56	112	281
23	157	313	783	66	54	109	273
24	150	300	750	68	53	106	265
25	144	288	720	70	51	103	257
26	138	277	692	72	50	100	250
27	133	267	667	74	48	97	243
28	129	257	643	76	47	95	237
29	124	248	621	78	46	92	231
30	120	240	600	80	45	90	225
31	116	232	581	82	44	88	220
32	113	225	563	84	43	86	214
33	109	218	545	86	42	84	209
34	106	212	529	88	41	82	205
35	103	206	514	90	40	80	200
36	100	200	500	92	39	78	196
37	97	195	486	94	38	76	192
38	95	189	474	96	38	75	188
39	92	185	462	98	37	74	184
40	90	180	450	100	36	72	180
41	88	176	439	102	35	71	178
42	86	172	429	104	35	69	173
43	84	167	419	106	34	68	170
44	82	164	409	108	33	67	167
45	80	160	400	110	33	65	164
46	78	157	391	112	32	64	161
47	76	153	383	116	31	62	155
48	75	150	375	120	30	60	150
49	73	147	367				

Set Thermostat Heat Anticipator

When using a non-electronic thermostat, the thermostat heat anticipator must be set to match the amp draw of components in the R-W/W1 circuit. Accurate amp draw measurements can be obtained only at the thermostat subbase terminals R and W.

The thermostat and anticipator should NOT be in the circuit while measuring current. If thermostat has no subbase, the thermostat must be disconnected from R and W/W1 wires during current measurement.

Fig. 54 illustrates an easy method of obtaining thermostat amp draw measurements. The amp reading should be taken after blower motor has started and furnace is operating in low-heat.

1. To operate furnace in low-heat, turn setup switch SW1-2 to ON position (See Fig. 33) and connect ammeter leads across thermostat subbase R-W.
2. See thermostat manufacturer's instructions for adjusting the heat anticipator and for varying heating cycle length.

NOTE: When using an electronic thermostat, set cycle rate for 3 cycles per hr.

3. Return setup switch SW1-2 to OFF position and replace thermostat on subbase.

Check Safety Controls

This section covers the safety controls that must be checked before the installation is complete. The flame sensor, gas valve, and pressure switches were all checked in the Start-up procedure section as part of normal operation.

Check Primary Limit Control

This control shuts off the gas control system and energizes the air-circulating blower motor if furnace overheats.

1. The recommended method of checking this limit control is to gradually block off return air after furnace has been operating for a period of at least 5 minutes.
2. As soon as limit control has shut off burners, a status code 33 will appear on furnace control.
3. The return-air opening should be unblocked to permit normal air circulation.

By using this method to check the limit control, it can be established that the limit is functioning properly and the furnace will operate safely if there is a restricted return-air duct or motor failure. If the limit control does not function during this test, the cause must be determined and corrected.

Check Pressure Switches

This control proves operation of the draft inducer. Check switch operation as follows:

1. Turn off 115-v power to furnace.
2. Remove control access door and disconnect inducer motor 12-pin wire harness at inducer motor.
3. Turn on 115-v power to furnace.

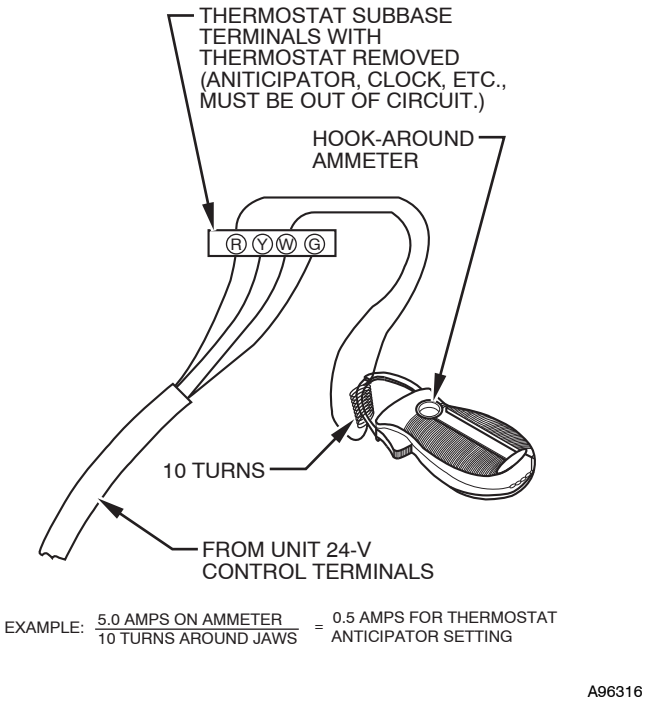

Fig. 54 - Amp Draw with Ammeter

4. Set thermostat to "call for heat." When pressure switches are functioning properly, status code 42 will flash on furnace control approximately 20 sec after thermostat switch is closed. If either a status code 31 or 32 is flashed when inducer motor is disconnected, the furnace will shut itself down immediately. Determine the reason pressure switches did not function properly and correct the condition.
5. Turn off 115-v power to furnace.
6. Reconnect inducer motor wire harness. Reinstall furnace access door.
7. Turn on 115-v power to furnace.
8. Reset thermostat to desired temperature.

CHECKLIST

1. Put away tools and instruments. Clean up debris.
2. Verify flame rollout manual reset switch has continuity.
3. Verify that blower and main access doors are properly installed.
4. Cycle test furnace with room thermostat.
5. Check operation of accessories per manufacturer's instructions.
6. Review User's Manual with owner.
7. Leave literature packet near furnace.

CHECKLIST — INSTALLATION

LOAD CALCULATION

_____ Heating Load (Btuh)

_____ Cooling Load (Btuh)

_____ Furnace Model Selection

COMBUSTION AND VENT PIPING

Termination Location

_____ Vent

_____ Roof

_____ Sidewall

_____ Combustion–Air

_____ Roof

_____ Sidewall

_____ Attic

_____ Crawl Space

_____ Termination Kit–2 Pipe or Concentric

_____ Combustion–Air Pipe Length

_____ Combustion–Air Pipe Elbow Quantity

_____ Vent Pipe Length

_____ Vent Pipe Elbow Quantity

_____ Pipe Diameter Determined from Sizing Table

_____ Pipe Sloped To Furnace

Pipe Insulation

_____ Over Ceilings

_____ Low–Ambient Exposed Pipes

Condensate Drain

_____ Unit Level or Pitched Forward

_____ Internal Tubing Connections Free of Kinks and Traps

_____ External Drain Connection Leak Tight and Sloped

_____ Condensate Trap Primed before Start–Up

Heat Tape Installed if Required

CHECKLIST – START–UP

_____ Gas Input Rate (Set Within 2 percent of Rating Plate)

_____ Temperature Rise Adjusted

Thermostat Anticipator

_____ Anticipator Setting Adjusted or

_____ Cycle Rate (3 Cycles per Hr) Selected

Safety Controls Check Operation

CHECKLIST – START–UP

_____ Gas Input Rate (Set Within 2 percent of Rating Plate)

_____ Temperature Rise Adjusted

Thermostat Anticipator

_____ Anticipator Setting Adjusted or

_____ Cycle Rate (3 Cycles per Hr) Selected

Safety Controls Check Operation

_____ Primary Limit

_____ Pressure Switches

©2010 Bryant Heating & Cooling Systems ● 7310 W. Morris St. ● Indianapolis, IN 46231 Printed in U.S.A. Edition Date: 01/10 **Catalog No. II355B−40−2**

Manufacturer reserves the right to discontinue, or change at any time, specifications or designs without notice and without incurring obligations.

Replaces: II355B−40−1