674D
SINGLE-PACKAGED GAS HEATING/ELECTRIC HEAT PUMP WITH PURON® (R-410A) REFRIGERANT 2-5 NOMINAL TONS (SIZES 024-060) 1 & 3 PHASE

bryant®

Installation Instructions

NOTE: Read the entire instruction manual before starting the installation.

NOTE: Installer: Make sure the Owner's Manual and Service Instructions are left with the unit after installation.

TABLE OF CONTENTS

PAGE

SAFETY CONSIDERATIONS 1
INTRODUCTION 2
RECEIVING AND INSTALLATION 2-15
Check Equipment 2
Identify Unit 2
Inspect Shipment 2
Provide Unit Support 2
Roof Curb 2
Slab Mount 2
Ground Mount 2
Field Fabricate Ductwork 2
Provide Clearances 2
Rig and Place Unit 6-7
Connect Condensate Drain 7
Install Flue Hood 7
Install Gas Piping 7, 10
Install Duct Connections 10
Configuring Units for Downflow (Vertical) Discharge 10
Install Electrical Connections 11
High-Voltage Connections 11
Special Procedures for 208-V Operation 11
Control Voltage Connections 12
Balance Point Setting Thermidistat or Hybrid Heat Thermostat 12
Easy Select™ 12-15
Transformer Protection 15
PRE-START-UP 15
START-UP 15-19
Check for Refrigerant Leaks 15
Unit Sequence of Operation 16
Start-Up Heating and Make Adjustments 16
Checking Heating Control 16
Check Gas Input 16
Adjust Gas Input 17
Start-Up Cooling and Make Adjustments 18
Checking Cooling Control Operation 18
Checking and Adjusting Refrigerant Charge 18
Indoor Airflow and Airflow Adjustments 19
MAINTENANCE 23-26
Air Filter 23
Indoor Blower and Motor 23
Flue Gas Passageways 23-24
Combustion Air Blower 24
Limit Switch 24
Burner Ignition 24
Main Burners 24
Outdoor Coil, Indoor Coil, & Condensate Drain Pan 25
Outdoor Fan 25

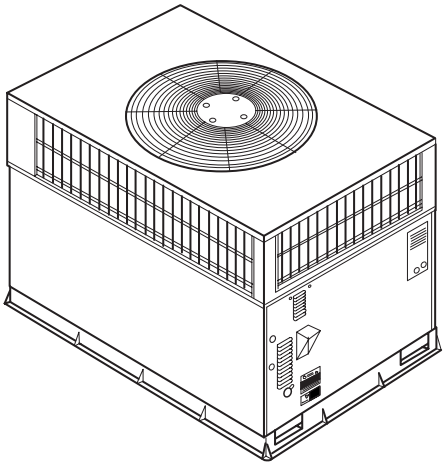

A99338

Fig. 1 - Unit 674D

Electrical Controls and Wiring 25
Refrigerant Circuit 25
Gas Input 26
Indoor Airflow 26
Check Defrost Thermostat 26
Puron® Items 26
TROUBLESHOOTING 29
START-UP CHECKLIST 29

SAFETY CONSIDERATIONS

Installation and servicing of this equipment can be hazardous due to mechanical and electrical components. Only trained and qualified personnel should install, repair, or service this equipment.

Untrained personnel can perform basic maintenance functions such as cleaning and replacing air filters. All other operations must be performed by trained service personnel. When working on this equipment, observe precautions in the literature, on tags, and on labels attached to or shipped with the unit and other safety precautions that may apply.

Follow all safety codes. Installation must be in compliance with local and national building codes. Wear safety glasses, protective clothing, and work gloves. Have fire extinguisher available. Read these instructions thoroughly and follow all warnings or cautions included in literature and attached to the unit.

Recognize safety information. This is the safety-alert symbol ⚠. When you see this symbol on the unit and in instructions or manuals, be alert to the potential for personal injury. Understand these signal words: DANGER, WARNING, and CAUTION. These words are used with the safety-alert symbol. DANGER identifies the most serious hazards which **will** result in severe personal injury or death. WARNING signifies hazards which **could** result in personal injury or death. CAUTION is used to identify unsafe practices which **may** result in minor personal injury or product and property damage. NOTE is used to highlight suggestions which **will** result in enhanced installation, reliability, or operation.

⚠ WARNING

ELECTRICAL SHOCK HAZARD

Failure to follow this warning could result in personal injury or death.

Before installing or servicing system, always turn off main power to system. There may be more than one disconnect switch. Turn off accessory heater power switch if applicable.

⚠ WARNING

FIRE, EXPLOSION, ELECTRICAL SHOCK AND CARBON MONOXIDE POISONING HAZARD

Failure to follow this warning could result in personal injury, death or property damage.

A qualified installer or agency must use only factory-authorized kits or accessories when modifying this product.

INTRODUCTION

The 674D unit (see Fig. 1) is a fully self-contained, combination Category I gas heating/electric cooling unit designed for outdoor installation (See Fig. 2 and 3 for unit dimensions). All unit sizes have return and discharge openings for both horizontal and downflow configurations, and are factory shipped with all downflow duct openings covered. Units may be installed either on a rooftop, a cement slab, or directly on the ground, if local codes permit (See Fig. 4 for roof curb dimensions).

Models with an N in the fifth position of the model number are dedicated Low NOx units designed for California installations. These models meet the California maximum oxides of nitrogen (NOx) emissions requirements of 40 nanograms/joule or less as shipped from the factory and must be installed in California Air Quality Management Districts or any other regions in North America where a Low NOx rule exists.

RECEIVING AND INSTALLATION

Step 1 — Check Equipment

IDENTIFY UNIT

The unit model number and serial number are stamped on the unit information plate. Check this information against shipping papers.

INSPECT SHIPMENT

Inspect for shipping damage while unit is still on shipping pallet. If unit appears to be damaged or is torn loose from its anchorage, have it examined by transportation inspectors before removal. Forward claim papers directly to transportation company. Manufacturer is not responsible for any damage incurred in transit. Check all items against shipping list. Immediately notify the nearest equipment distribution office if any item is missing. To prevent loss or damage, leave all parts in original packages until installation.

Step 2 — Provide Unit Support

For hurricane tie downs, contact distributor for details and PE (Professional Engineering) Certificate if required.

ROOF CURB

Install accessory roof curb in accordance with instructions shipped with curb (See Fig. 4). Install insulation, cant strips, roofing, and flashing. Ductwork must be attached to curb.

IMPORTANT: The gasketing of the unit to the roof curb is critical for a water tight seal. Install gasketing material supplied with the roof curb. Improperly applied gasketing also can result in air leaks and poor unit performance.

Curb should be level to within 1/4 in. (6 mm). This is necessary for unit drain to function properly. Refer to accessory roof curb installation instructions for additional information as required.

SLAB MOUNT

Place the unit on a solid, level concrete pad that is a minimum of 4 in. (102 mm) thick with 2 in. (51 mm) above grade. The slab should be flush on the compressor end of the unit (to allow condensate drain installation) and should extend 2 in. (51 mm) on the three remaining sides of the unit. Do not secure the unit to the slab *except* when required by local codes.

GROUND MOUNT

The unit may be installed either on a slab or placed directly on the ground, if local codes permit. Place the unit on level ground prepared with gravel for condensate discharge.

Step 3 — Field Fabricate Ductwork

Secure all ducts to roof curb and building structure on vertical discharge units. Do not connect ductwork to unit. For horizontal applications, unit is provided with flanges on the horizontal openings. All ductwork should be secured to the flanges. Insulate and weatherproof all external ductwork, joints, and roof openings with counter flashing and mastic in accordance with applicable codes.

Ducts passing through an unconditioned space must be insulated and covered with a vapor barrier.

If a plenum return is used on a vertical unit, the return should be ducted through the roof deck to comply with applicable fire codes.

A minimum clearance is not required around ductwork. Cabinet return-air static shall not exceed -.25 in. wc.

Step 4 — Provide Clearances

The required minimum operating and service clearances are shown in Fig. 2 and 3. Adequate combustion, ventilation and condenser air must be provided in accordance with section 5.3, Air for Combustion and Ventilation, of the National Fuel Gas Code ANSI (American National Standards Institute) Z223.1 or applicable provisions of local building code. In Canada, follow sections 7.2, 7.3, or 7.4 or Can/CGA (Canadian Gas Association) B149 Installation Codes or applicable provisions of local building code.

IMPORTANT: Do not restrict outdoor airflow. An air restriction at either the outdoor-air inlet or the fan discharge may be detrimental to compressor life.

The condenser fan pulls air through the condenser coil and discharges it through the top grille. Be sure that the fan discharge does not recirculate to the condenser coil. Do not locate the unit in either a corner or under an overhead obstruction. The minimum clearance under a partial overhang (such as a normal house overhang) is 48-in. (1219 mm) above the unit top. The maximum horizontal extension of a partial overhang must not exceed 48-in. (1219 mm).

Do not place the unit where water, ice, or snow from an overhang or roof will damage or flood the unit. Do not install the unit on carpeting or other combustible materials. The unit may be installed on wood flooring or on Class A, B, or C roof covering materials.

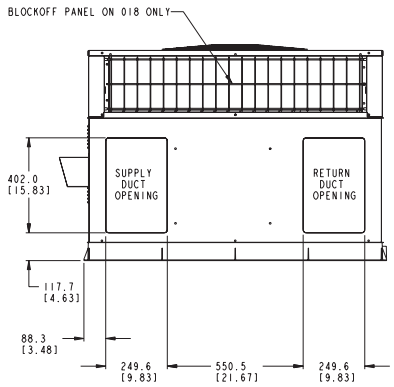

REAR VIEW

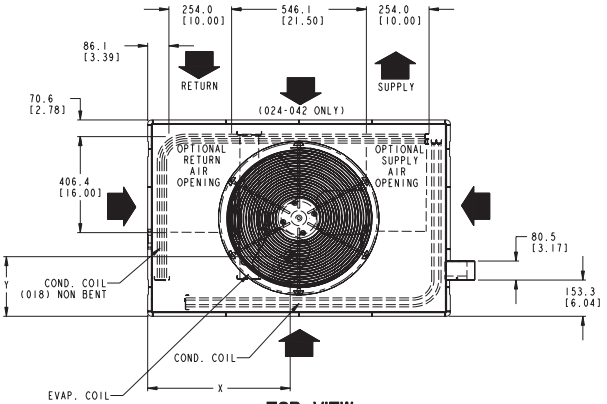

TOP VIEW

REQUIRED CLEARANCE TO COMBUSTIBLE MAT'L.
(Refer to Maximum Operating Clearances)

	INCHES [mm]
TOP OF UNIT	14.00 [355.6]
DUCT SIDE OF UNIT	2.00 [50.8]
SIDE OPPOSITE DUCTS	14.00 [355.6]
BOTTOM OF UNIT	0.50 [12.7]

NEC. REQUIRED CLEARANCES.

	INCHES [mm]
BETWEEN UNITS, POWER ENTRY SIDE	42.00 [1066.8]
UNIT AND UNGROUNDED SURFACES, POWER ENTRY SIDE	36.00 [914.0]
UNIT AND BLOCK OR CONCRETE WALLS AND OTHER GROUNDED SURFACES, POWER ENTRY SIDE	42.00 [1066.8]

LEGEND
CG - Center of Gravity
COND - Condensor
EVAP - Evaporator
NEC - National Electrical Code
REQ'D - Required

NOTE: Dimensions are in in. [mm]

REQUIRED CLEARANCE FOR OPERATION AND SERVICING

	INCHES [mm]
EVAP. COIL ACCESS SIDE	36.00 [914.0]
POWER ENTRY SIDE	42.00 [1066.8]
(EXCEPT FOR NEC REQUIREMENTS)	
UNIT TOP	48.00 [1219.2]
SIDE OPPOSITE DUCTS	36.00 [914.0]
DUCT PANEL	12.00 [304.8] *

*MINIMUM DISTANCES: IF UNIT IS PLACED LESS THAN 12.00 [304.8] FROM WALL SYSTEM, THEN SYSTEM PERFORMANCE MAYBE COMPROMISE.

674D

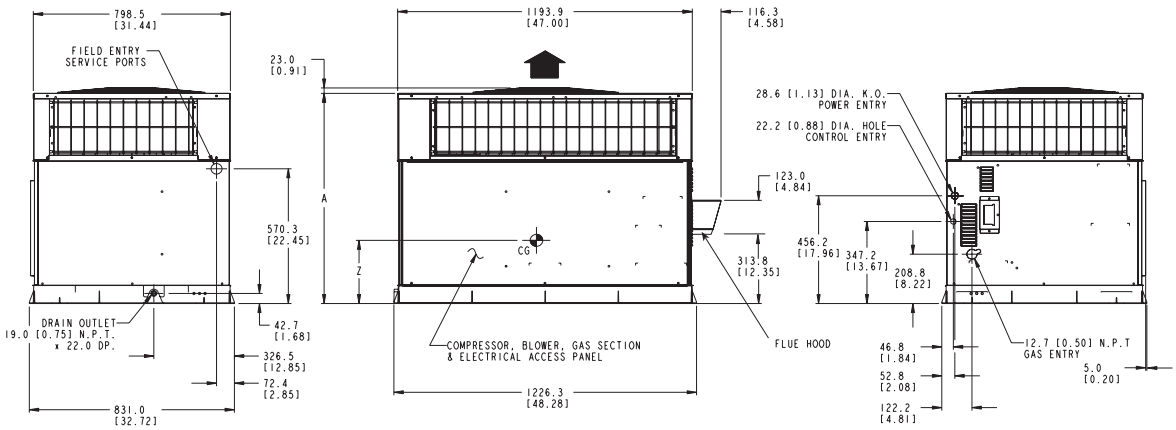

LEFT SIDE VIEW FRONT VIEW RIGHT SIDE VIEW

A05166

UNIT	ELECTRICAL CHARACTERISTICS	UNIT WEIGHT		UNIT HEIGHT IN. [MM] "A"	CENTER OF GRAVITY IN. [MM]		
		lb	kg		X	Y	Z
674D024-040	208/230-1-60	365	166	39.02[991.1]	20.0 [508]	19.3 [489]	17.6 [447]
674D030-040/060	208/230-1-60	365	166	39.02[991.1]	20.0 [508]	19.3 [489]	17.6 [447]
674D036-060/090	208/230-1-60, 208/230-3-60	403	183	41.02[1041.9]	20.0 [508]	14.0 [355.6]	13.0 [330.2]

Fig. 2 - 674D024-036 Unit Dimensions

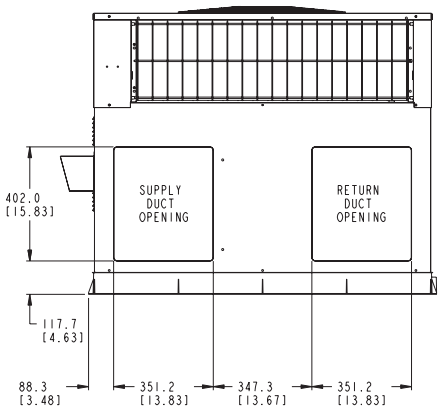

REAR VIEW

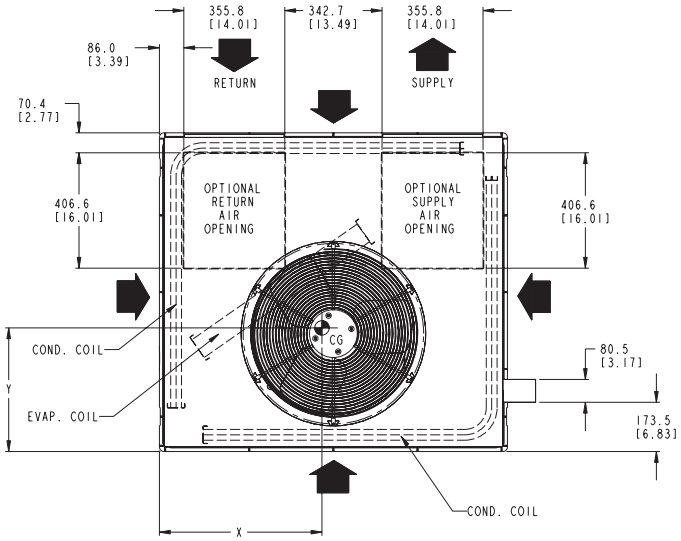

TOP VIEW

REQUIRED CLEARANCE TO COMBUSTIBLE MATL.

	INCHES [mm]
TOP OF UNIT	14.00 [355.6]
DUCT SIDE OF UNIT	2.00 [50.8]
SIDE OPPOSITE DUCTS	14.00 [355.6]
BOTTOM OF UNIT	0.50 [12.7]
ELECTRIC HEAT PANEL	36.00 [914.4]

NEC. REQUIRED CLEARANCES.

	INCHES [mm]
BETWEEN UNITS, POWER ENTRY SIDE	42.00 [1066.8]
UNIT AND UNGROUNDED SURFACES, POWER ENTRY SIDE	36.00 [914.0]
UNIT AND BLOCK OR CONCRETE WALLS AND OTHER GROUNDED SURFACES, POWER ENTRY SIDE	42.00 [1066.8]

REQUIRED CLEARANCE FOR OPERATION AND SERVICING

	INCHES [mm]
EVAP. COIL ACCESS SIDE	36.00 [914.0]
POWER ENTRY SIDE	42.00 [1066.8]
(EXCEPT FOR NEC REQUIREMENTS)	
UNIT TOP	48.00 [1219.2]
SIDE OPPOSITE DUCTS	36.00 [914.0]
DUCT PANEL	12.00 [304.8] *

*MINIMUM DISTANCES: IF UNIT IS PLACED LESS THAN 12.00 [304.8] FROM WALL SYSTEM, THEN SYSTEM PERFORMANCE MAYBE COMPROMISE.

LEGEND
CG - Center of Gravity
COND - Condensor
EVAP - Evaporator
NEC - National Electrical Code
REQ'D - Required

NOTE: Dimensions are in in. [mm]

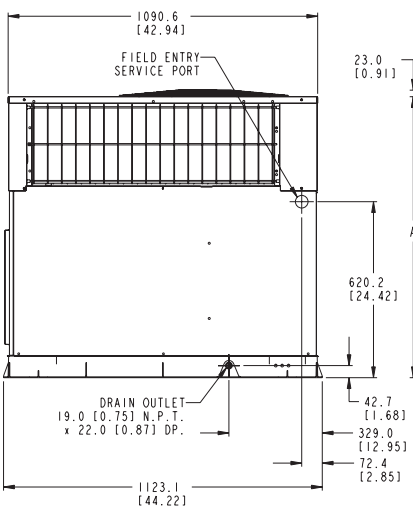

LEFT SIDE VIEW

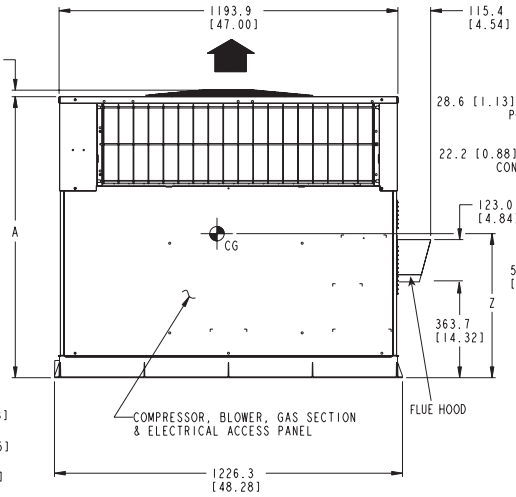

FRONT VIEW

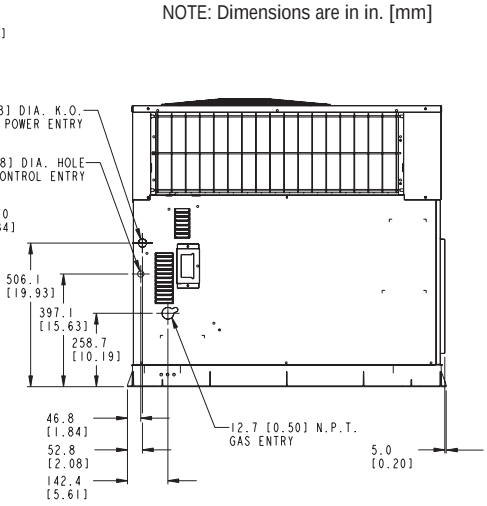

RIGHT SIDE VIEW

A05142

UNIT	ELECTRICAL CHARACTERISTICS	UNIT WEIGHT		UNIT HEIGHT IN. [MM] "A"	CENTER OF GRAVITY IN. [MM]		
		lb	kg		X	Y	Z
674D042-060/090	208/230-1-60, 208/230-3-60	455	207	42.98 [1091.7]	21.0 [533.4]	20.5 [520.7]	16.6 [421.6]
674D048-090/115/130	208/230-1-60, 208/230-3-60	493	224	44.98 [1142.5]	19.5 [495.3]	21.3 [539.8]	18.0 [457.2]
674D060-090/115/130	208/230-1-60, 208/230-3-60	529	240	46.98 [1193.3]	21.0 [533.4]	20.0 [508.0]	17.6 [447.0]

Fig. 3 - 674D042-060 Unit Dimensions

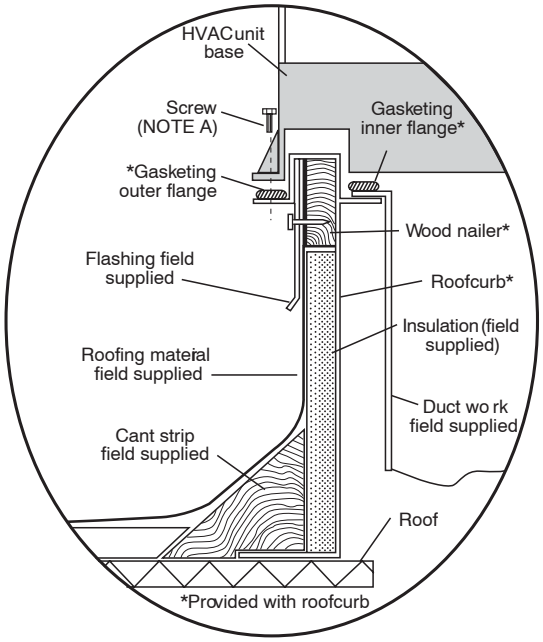

Roof Curb for Small Cabinet

Note A: When unit mounting screw is used retainer bracket must also be used.

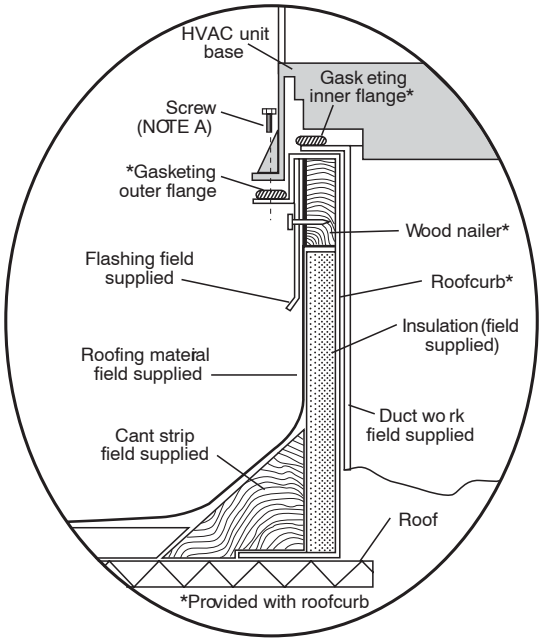

Roof Curb for Large Cabinet

Note A: When unit mounting screw is used retainer bracket must also be used.

674D

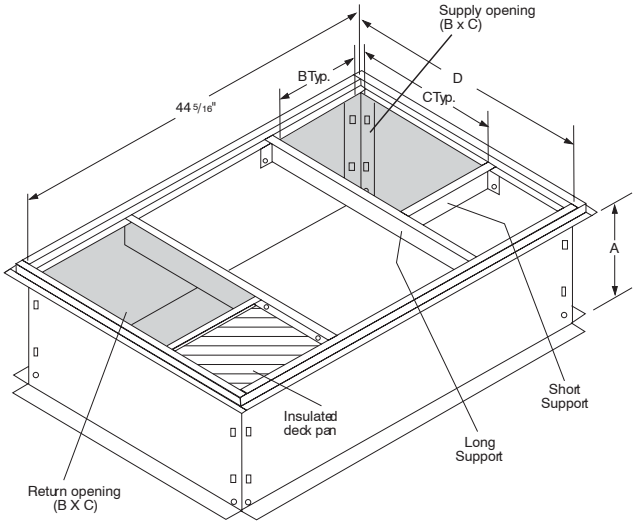

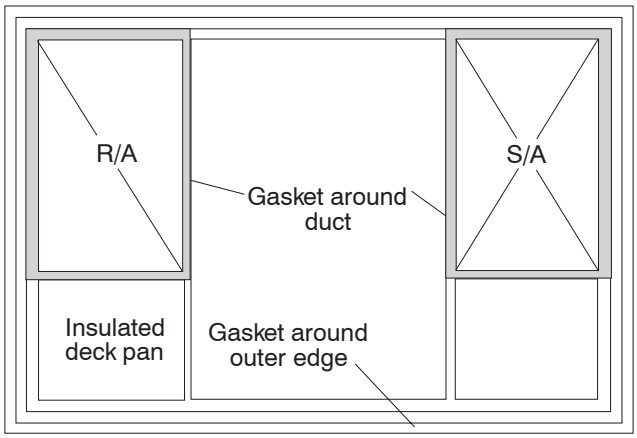

C00076

UNIT SIZE	ODS CATALOG NUMBER	A IN. (MM)	B IN. (MM)	C IN. (MM)	D IN. (MM)
674D024-036	CPRFCURB006A00	8 (203)	11 (279)	16-1/2 (419)	28-3/4 (730)
	CPRFCURB007A00	14 (356)	11 (279)	16-1/2 (419)	28-3/4 (730)
674D042-060	CPRFCURB008A00	8 (203)	16-3/16 (411)	17-3/8 (441)	40-1/4 (1022)
	CPRFCURB009A00	14 (356)	16-3/16 (411)	17-3/8 (441)	40-1/4 (1022)

NOTES:

1. Roof curb must be set up for unit being installed.
2. Seal strip must be applied, as required, to unit being installed.
3. Dimensions are in inches.
4. Dimension in ( ) are in millimeters.
5. Roof curb is made of 16-gauge steel.
6. Attach ductwork to curb (flanges of duct rest on curb).
7. Insulated panels: 1-in. thick fiberglass 1 lb. density.
8. When unit mounting screw is used (see Note A), a retainer bracket must be used as well. This bracket must also be used when required by code for hurricane or seismic conditions. This bracket is available through Micrometl.

Fig. 4 - Roof Curb Dimensions

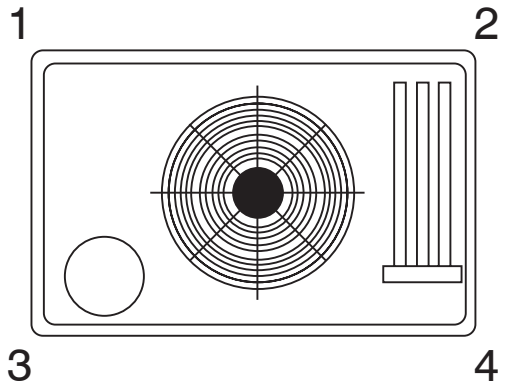

A07216

CORNER WEIGHTS (SMALL CABINET)							CORNER WEIGHTS (LARGE CABINET)						
Unit	024		030		036		Unit	042		048		060	
	lb	kg	lb	kg	lb	kg	Unit	lb	kg	lb	kg	lb	kg
Total Weight	365	166	365	166	403	183	Total Weight	455	206	493	224	529	240
Corner Weight 1	73	33	73	33	81	37	Corner Weight 1	91	41	99	45	106	48
Corner Weight 2	57	26	57	26	63	29	Corner Weight 2	71	32	77	35	82	37
Corner Weight 3	88	40	88	40	97	44	Corner Weight 3	110	50	119	54	128	58
Corner Weight 4	147	67	147	67	162	74	Corner Weight 4	183	83	198	90	213	97
Shipping Weight	387	176	387	176	425	193	Shipping Weight	477	216	515	234	551	249

Fig. 5 - 674D Corner Weights

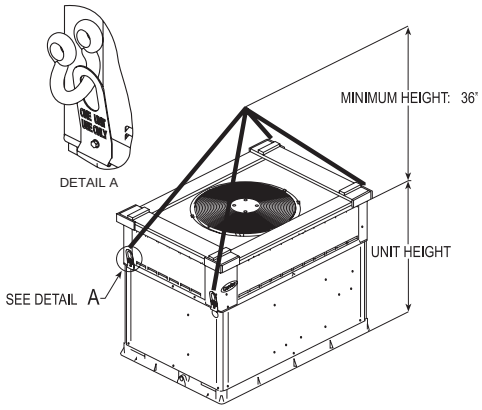

A05161

Fig. 6 - Suggested Rigging

Step 5 — Rig and Place Unit

Rigging and handling of this equipment can be hazardous for many reasons due to the installation location (roofs, elevated structures, etc.).

Only trained, qualified crane operators and ground support staff should handle and install this equipment.

When working with this equipment, observe precautions in the literature, on tags, stickers, and labels attached to the equipment, and any other safety precautions that might apply.

Training for operators of the lifting equipment should include, but not be limited to, the following:

1. Application of the lifter to the load, and adjustment of the lifts to adapt to various sizes or kinds of loads.
2. Instruction in any special operation or precaution.
3. Condition of the load as it relates to operation of the lifting kit, such as balance, temperature, etc.

Follow all applicable safety codes. Wear safety shoes and work gloves.

INSPECTION

The lifting/rigging bracket is engineered and designed to be installed *only* on Small Packaged Products. This bracket is to be used to rig/lift a Small Packaged Product onto roofs or other elevated structures.

Prior to initial use, and at monthly intervals, all rigging brackets and straps should be visually inspected for any damage, evidence of wear, structural deformation, or cracks. Particular attention should be paid to excessive wear at hoist hooking points and load support areas. Brackets or straps showing any kind of wear in these areas must not be used and should be discarded.

⚠ WARNING

UNIT FALLING HAZARD

Failure to follow this warning could result in personal injury or death.

Never stand beneath rigged units or lift over people.

⚠ WARNING

PROPERTY DAMAGE HAZARD

Failure to follow this warning could result in personal injury/death or property damage.

Rigging brackets for one unit use only. When removing a unit at the end of its useful life, use a new set of brackets.

USE OF RIGGING BRACKET

Field Installation of Rigging Bracket (if not already installed)

1. Remove unit from shipping carton. Leave top shipping skid on the unit for use as a spreader bar to prevent the rigging straps from damaging the unit. If the skid is not available, use a spreader bar of sufficient length to protect the unit from damage.
2. Remove 4 screws in unit corner posts.
3. Attach each of the 4 metal rigging brackets under the panel rain lip (See Fig. 6). Use the screws removed in step 2 above to secure the brackets to the unit.

⚠ WARNING

PROPERTY DAMAGE HAZARD

Failure to follow this warning could result in personal injury/death or property damage.

Rigging bracket MUST be under the rain lip to provide adequate lifting.

⚠ WARNING

PROPERTY DAMAGE HAZARD

Failure to follow this warning could result in personal injury/death or property damage.

Do not strip screws when re-securing the unit. If a screw is stripped, replace the stripped one with a larger diameter screw (included). When straps are taut, the clevis should be a minimum of 36 in. (914.4 mm) above the unit top cover.

Rigging/Lifting of Unit

1. Bend top of brackets down approximately 30 degrees from the corner posts.
2. Attach straps of equal length to the rigging brackets at opposite ends of the unit. Be sure straps are rated to hold the weight of the unit (See Fig. 6).
3. Attach a clevis of sufficient strength in the middle of the straps. Adjust the clevis location to ensure unit is lifted level with the ground.
4. Remove corner post screws and rigging brackets, then re-install screws.

After the unit is placed on the roof curb or mounting pad, remove the top crating.

Step 6 — Connect Condensate Drain

NOTE: When installing condensate drain connection be sure to comply with local codes and restrictions.

Model 674D disposes of condensate water through a 3/4 in. NPT fitting which exits through the compressor access panel (See Fig. 2 and 3 for location).

Condensate water can be drained directly onto the roof in rooftop installations (where permitted) or onto a gravel apron in groundlevel installations. Install a field-supplied condensate trap at end of condensate connection to ensure proper drainage. Make sure that the outlet of the trap is at least 1 in. lower than the drain-pan condensate connection to prevent the pan from overflowing (See Fig. 7). Prime the trap with water. When using a gravel apron, make sure it slopes away from the unit.

If the installation requires draining the condensate water away from the unit, install a 2-in. (51 mm) trap at the condensate connection to ensure proper drainage (See Fig. 7). Make sure that the outlet of the trap is at least 1 in. (25 mm) lower than the drain-pan condensate connection. This prevents the pan from overflowing.

Prime the trap with water. Connect a drain tube - using a minimum of 3/4-in. PVC or 3/4-in. copper pipe (all field-supplied) - at the outlet end of the 2-in. (51 mm) trap. Do not undersize the tube. Pitch the drain tube downward at a slope of at least 1-in. (25 mm) for every 10 ft (3 m) of horizontal run. Be sure to check the drain tube for leaks.

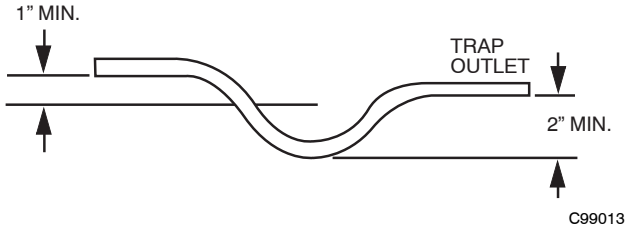

Fig. 7 - Condensate Trap

Step 7 — Install Flue Hood

The flue hood assembly is shipped in the return section of the indoor blower compartment (See Fig. 9). Remove the return duct cover to locate the assembly.

Dedicated low NOx models MUST be installed in California Air Quality Management Districts where a Low NOx rule exists. These models meet the California maximum oxides of nitrogen (NOx) emissions requirements of 40 nanograms/joule or less as shipped from the factory.

NOTE: Low NOx requirements apply only to natural gas installations.

⚠ WARNING

PERSONAL INJURY AND UNIT DAMAGE HAZARD

Failure to follow this warning could result in personal injury or death and unit component damage.

The venting system is designed to ensure proper venting. The flue hood assembly must be installed as indicated in this section of the unit installation instructions.

Install the flue hood as follows:

1. This installation must conform with local building codes and with the National Fuel Gas Code (NFGC), ANSI Z223.1 (in Canada, CAN/CGA B149.1, and B149.2) or NFPA (National Fire Protection Association) latest revision. Refer to Provincial and local plumbing or wastewater codes and other applicable local codes.
2. Remove flue hood from shipping location (inside the return section of the blower compartment-See Fig. 8). Place vent cap assembly over flue panel. Orient screw holes in vent cap with holes in the flue panel.
3. Secure flue hood to flue panel by inserting a single screw on the right side and the left side of the hood.

Table 1 – Physical Data - Unit 674D

UNIT SIZE 674D	024040	030040	030060	036060	036090	042060	042090
NOMINAL CAPACITY (ton)	2	2–1/2	2–1/2	3	3	3–1/2	3–1/2
OPERATING WEIGHT (lb.) OPERATING WEIGHT (kg)	365 166	365 166	365 166	403 183	403 183	455 206	455 206
COMPRESSORS	Scroll						
Quantity	1						
REFRIGERANT (R–410A) Quantity (lb.) Quantity (kg)	 7.5 3.4	 8.0 3.6	 8.0 3.6	 9.5 4.3	 9.5 4.3	 10.8 4.9	 10.8 4.9
REFRIGERANT METERING DEVICE	Indoor–TXV Outdoor–Accurater						
OUTDOOR ORIFICE (in.) OUTDOOR ORIFICE (mm)	0.035 (2) .89	0.035 (2) .89	0.035 (2) .89	0.038 (2) .97	0.038 (2) .97	0.038 (2) .97	0.038 (2) .97
OUTDOOR COIL Rows...Fins/in. Face Area (sq ft)	2...2 2.3	2...2 12.3	2...2 12.3	2...2 13.6	2...21 3.6	2...21 5.4	2...21 5.4
OUTDOOR FAN Nominal Cfm Diameter (in.) Diameter (mm) Motor Hp (Rpm)	 2350 22 559 1/8 (825)	 2350 22 559 1/8 (825)	 2350 22 559 1/8 (825)	 2350 22 559 1/8 (825)	 2350 22 559 1/8 (825)	 2800 22 559 1/8 (825)	 2800 22 559 1/8 (825)
INDOOR COIL Rows...Fins/in. Face Area (sq ft)	3...15 3.7	3...15 3.7	3...15 3.7	4...15 3.7	4...15 3.7	3...15 4.7	3...15 4.7
INDOOR BLOWER Nominal Airflow (Cfm) Size (in.) Size (mm) Motor (hp)	 790 10x10 254x254 1/2	 1000 10x10 254x254 1/2	 1000 10x10 254x254 1/2	 1100 11x10 279x254 3/4	 1100 11x10 279x254 3/4	 1400 11x10 279x254 3/4	 1400 11x10 279x254 3/4
FURNACE SECTION* Burner Orifice No. (Qty...Drill Size) Natural Gas Burner Orifice No. (Qty...Drill Size) Propane Gas	2...44 2...50	2...44 2...50	2...44 2...50	2...38 2...46	3...38 3...46	2...38 2...46	2...38 2...46
HIGH–PRESSURE SWITCH (psig) Cut–out Reset (Auto)	610 +/–15 420 +/–25						
LOSS–OF–CHARGE / LOW–PRESSURE SWITCH (Liquid Line) (psig) Cut–out Reset (auto)	20 +/–5 45 +/–10						
RETURN–AIR FILTERS (in.)† ‡ Throwaway	20x24x1	20x24x1	20x24x1	24x30x1	24x30x1	24x36x1	24x36x1

*Based on altitude of 0 to 2000 ft.

†Required filter sizes shown are based on the larger of the ARI (Air Conditioning and Refrigeration Institute) rated cooling airflow or the heating airflow velocity of 300 ft/minute for high–capacity type. Air filter pressure drop for non–standard filters must not exceed 0.08 in. wc.

‡ If using accessory filter rack refer to the filter rack installation instructions for correct filter size and quantity.

Step 8 — Install Gas Piping

The gas supply pipe enters the unit through the access hole provided. The gas connection to the unit is made to the 1/2-in. FPT gas inlet on the manual shutoff or gas valve.

Install a gas supply line that runs to the heating section. Refer to Table 2 and the NFGC for gas pipe sizing. Do not use cast-iron pipe. It is recommended that a black iron pipe is used. Check the local utility for recommendations concerning existing lines. Size gas supply piping for 0.5 in. wc maximum pressure drop. Never use pipe smaller than the 1/2-in. FPT gas inlet on the unit gas valve.

When installing the gas supply line, observe local codes pertaining to gas pipe installations. Refer to the NFGC ANSI Z223.1-1988 NFPA latest edition (in Canada, CAN/CGA B149.1, (2)-M86). In the absence of local building codes, adhere to the following pertinent recommendations:

1. Avoid low spots in long runs of pipe. Grade all pipe 1/4 in. per 15 ft (6 mm per 4.57 m) to prevent traps. Grade all horizontal runs downward to risers. Use risers to connect to heating section and to meter.
2. Protect all segments of piping system against physical and thermal damage. Support all piping with appropriate straps, hangers, etc. Use a minimum of one hanger every 6 ft (1.8 m). For pipe sizes larger than 1/2 in., follow recommendations of national codes.
3. Apply joint compound (pipe dope) sparingly and only to male threads of joint when making pipe connections. Use only pipe dope that is resistant to action of liquefied petroleum gases as specified by local and/or national codes. Never use Teflon tape.

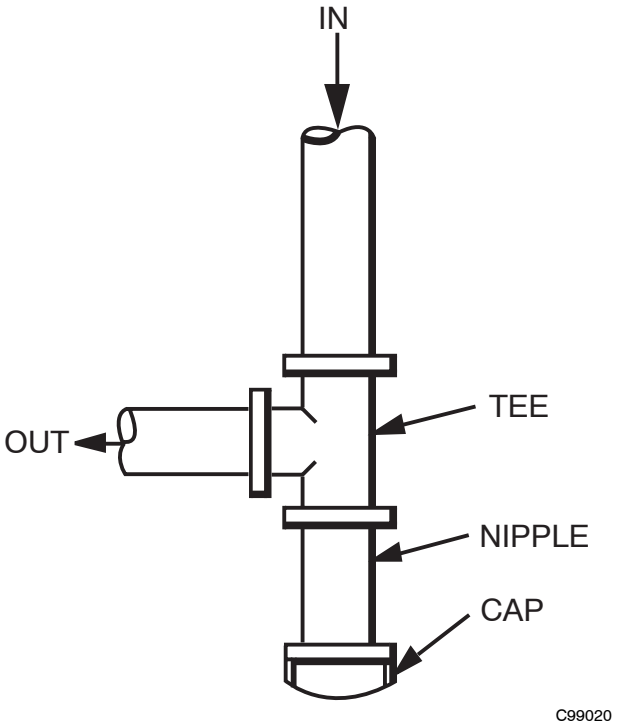

Fig. 8 - Sediment Trap

Table 1 - Physical Data - Unit 674D (Cont'd)

UNIT SIZE 674D	048090	048115	048130	060090	060115	060130
NOMINAL CAPACITY (ton)	4	4	4	5	5	5
OPERATING WEIGHT (lb.) OPERATING WEIGHT (kg)	493 224	493 224	493 224	529 240	529 240	529 240
COMPRESSORS	Scroll					
Quantity	1					
REFRIGERANT (R-410A) Quantity (lb.) Quantity (kg)	11.5 5.2	11.5 5.2	11.5 5.2	14.0 6.4	14.0 6.4	14.0 6.4
REFRIGERANT METERING DEVICE	Indoor-TXV Outdoor-Accurater					
OUTDOOR ORIFICE (IN.)	0.038 (Left OD Coil) (.97 mm) 0.046 (Right OD Coil) (1.2 mm)			0.042 (Left OD Coil) (1.0 mm) 0.052 (Right OD Coil) (1.3 mm)		
OUTDOOR COIL Rows...Fins/in. Face Area (sq ft)	2...21 17.2	2...21 17.2	2...21 17.2	2...21 19.4	2...21 19.4	2...21 19.4
OUTDOOR FAN Nominal Cfm Diameter (in.) Diameter (mm) Motor Hp (Rpm)	3300 22 559 1/4 (1100)	3300 22 559 1/4 (1100)	3300 22 559 1/4 (1100)	3300 22 559 1/4 (1100)	3300 22 559 1/4 (1100)	3300 22 559 1/4 (1100)
INDOOR COIL Rows...Fins/in. Face Area (sq ft)	4...15 4.7	4...15 4.7	4...15 4.7	4...15 5.7	4...15 5.7	4...15 5.7
INDOOR BLOWER Nominal Airflow (Cfm) Size (in.) Size (mm) Motor (hp)	1450 11x10 279x254 3/4 (1075)	1450 11x10 279x254 3/4 (1075)	1450 11x10 279x254 3/4 (1075)	1750 11x10 279x254 1.0 (1040)	1750 11x10 279x254 1.0 (1040)	1750 11x10 279x254 1.0 (1040)
FURNACE SECTION* Burner Orifice No. (Qty...Drill Size) Natural Gas Burner Orifice No. (Qty...Drill Size) Propane Gas	3...38 3...46	3...33 3...42	3...31 3...41	3...38 3...46	3...33 3...42	3...31 3...41
HIGH-PRESSURE SWITCH (psig) Cut-out Reset (Auto)	610 +/-15 420 +/-25					
LOSS-OF-CHARGE / LOW-PRESSURE SWITCH (Liquid Line) (psig) Cut-out Reset (auto)	20 +/-5 45 +/-10					
RETURN-AIR FILTERS (in.)† Throwaway	24x36x1	24x36x1	24x36x1	24x36x1	24x36x1	24x36x1

*Based on altitude of 0 to 2000 ft.

†Required filter sizes shown are based on the larger of the ARI (Air Conditioning and Refrigeration Institute) rated cooling airflow or the heating airflow velocity of 300 ft/minute for high-capacity type. Air filter pressure drop for non-standard filters must not exceed 0.08 in. wc.

‡ If using accessory filter rack refer to the filter rack installation instructions for correct filter size and quantity.

Table 2 – Maximum Gas Flow Capacity*

NOMINAL IRON PIPE, SIZE (IN.)	INTERNAL DIAMETER (IN.)	LENGTH OF PIPE, FT†													
		10	20	30	40	50	60	70	80	90	100	125	150	175	200
1/2	.622	175	120	97	82	73	66	61	57	53	50	44	40	—	—
3/4	.824	360	250	200	170	151	138	125	118	110	103	93	84	77	72
1	1.049	680	465	375	320	285	260	240	220	205	195	175	160	145	135
1-1/4	1.380	1400	950	770	600	580	530	490	460	430	400	360	325	300	280
1-1/2	1.610	2100	1460	1180	990	900	810	750	690	650	620	550	500	460	430

* Capacity of pipe in cu ft of gas per hr for gas pressure of 0.5 psig or less. Pressure drop of 0.5-in. wc (based on a 0.60 specific gravity gas). Refer to Table, National Fire Protection Association NFPA 54. † This length includes an ordinary number of fittings.

Table 3 – Heating Inputs

HEATING INPUT (BTUH)*	NUMBER OF ORIFICES	GAS SUPPLY PRESSURE (IN. WC)				MANIFOLD PRESSURE (IN. WC)	
		Natural		Propane†			
		Min	Max	Min	Max	Natural	Propane†
40,000	2	4.0	13.0	4.0	13.0	3.5	3.5
60,000	2	4.0	13.0	4.0	13.0	3.5	3.5
90,000	3	4.0	13.0	4.0	13.0	3.5	3.4
115,000	3	4.0	13.0	4.0	13.0	3.5	3.7
130,000	3	4.0	13.0	4.0	13.0	3.5	3.5

* When a unit is converted to propane, different size orifices must be used. See separate, natural-to-propane conversion kit instructions.

† Based on altitudes from sea level to 2000 ft above sea level. For altitudes above 2000 ft, reduce input rating 4 percent for each additional 1000 ft above sea level. In Canada, from 2000 ft above sea level to 4500 ft above sea level, de-rate the unit 10 percent.

Table 4 – Air Delivery (Cfm) at Indicated Temperature Rise and Rated Heating Input

HEATING INPUT (BTUH)	TEMPERATURE RISE °F										
	20	25	30	35	40	45	50	55	60	65	70
40,000	1500	1200	1000	857	750	667	600	545	500	—	—
60,000	2250	1800	1500	1286	1125	1000	900	818	750	692	—
90,000	—	—	2250	1929	1688	1500	1350	1227	1125	1038	964
115,000	—	—	—	2464	2156	1917	1725	1568	1438	1327	1232
130,000	—	—	—	2786	2438	2167	1950	1773	1625	1500	—

4. Install sediment trap in riser leading to heating section (See Fig. 8). This drip leg functions as a trap for dirt and condensate.
5. Install an accessible, external, manual main shutoff valve in gas supply pipe within 6 ft (1.8 m) of heating section.
6. Install ground-joint union close to heating section between unit manual shutoff and external manual main shut-off valve.
7. Pressure-test all gas piping in accordance with local and national plumbing and gas codes before connecting piping to unit.

NOTE: Pressure test the gas supply system after the gas supply piping is connected to the gas valve. The supply piping must be disconnected from the gas valve during the testing of the piping systems when test pressure is in excess of 0.5 psig. Pressure test the gas supply piping system at pressures equal to or less than 0.5 psig. The unit heating section must be isolated from the gas piping system by closing the external main manual shutoff valve and slightly opening the ground-joint union.

674D

⚠ WARNING

FIRE OR EXPLOSION HAZARD

Failure to follow this warning could result in personal injury, death and/or property damage.

-Connect gas pipe to unit using a backup wrench to avoid damaging gas controls.

-Never purge a gas line into a combustion chamber. Never test for gas leaks with an open flame. Use a commercially available soap solution made specifically for the detection of leaks to check all connections.

-Use proper length of pipe to avoid stress on gas control manifold.

-If a flexible connector is required or allowed by authority having jurisdiction, black iron pipe shall be installed at furnace gas valve and extend a minimum of 2 in. (51 mm)outside furnace casing.

-If codes allow a flexible connector, always use a new connector. do not use a connector which has previously serviced another gas appliance.

8. Check for gas leaks at the field-installed and factoryinstalled gas lines after all piping connections have been completed. Use soap-and-water solution (or method specified by local codes and/or regulations).

Step 9 — Install Duct Connections

The unit has duct flanges on the supply- and return-air openings on the side and bottom of the unit. For downshot applications, the ductwork connects to the roof curb (See Fig. 2 and 3 for connection sizes and locations).

CONFIGURING UNITS FOR DOWNFLOW (VERTICAL) DISCHARGE

⚠ WARNING

ELECTRICAL SHOCK HAZARD

Failure to follow this warning could result in personal injury or death.

Before installing or servicing system, always turn off main power to system. There may be more than one disconnect switch.

1. Open all electrical disconnects before starting any service work.
2. Remove horizontal (metal) duct covers to access vertical (downflow) discharge duct knockouts in unit base.
3. Use a screwdriver and hammer to remove the panels in the bottom of the unit base (See Fig. 9 & 10).
4. If unit ductwork is to be attached to vertical opening flanges on the unit base (jackstand applications only), do so at this time.

⚠ CAUTION

PROPERTY DAMAGE HAZARD

Failure to follow this caution may result in property damage.

Collect ALL screws that were removed. **Do not** leave screws on rooftop as permanent damage to the roof may occur.

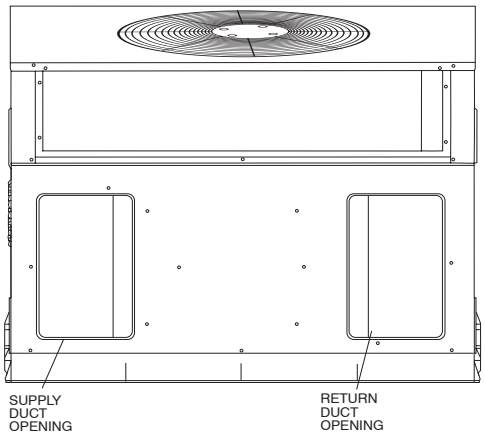

Fig. 9 - Supply and Return Duct Opening

5. It is recommended that the base insulation around the perimeter of the vertical return-air opening be secured to the base with aluminum tape. Applicable local codes may require aluminum tape to prevent exposed fiberglass.
6. Cover both horizontal duct openings with the provided duct covers. Ensure opening is air- and watertight.
7. After completing unit conversion, perform all safety checks and power up unit.

NOTE: The design and installation of the duct system must be in accordance with the standards of the NFPA for installation of nonresidence-type air conditioning and ventilating systems, NFPA 90A or residence-type, NFPA 90B; and/or local codes and ordinances.

Adhere to the following criteria when selecting, sizing, and installing the duct system:

1. Units are shipped for horizontal duct installation (by removing duct covers).
2. Select and size ductwork, supply-air registers, and return-air grilles according to American Society of Heating, Refrigeration and Air Conditioning Engineers (ASHRAE) recommendations.
3. Use flexible transition between rigid ductwork and unit to prevent transmission of vibration. The transition may be screwed or bolted to duct flanges. Use suitable gaskets to ensure weather tight and airtight seal.
4. All units must have field-supplied filters or accessory filter rack installed in the return-air side of the unit. Recommended sizes for filters are shown in Table 1.
5. Size all ductwork for maximum required airflow (either heating or cooling) for unit being installed. Avoid abrupt duct size increases or decreases or performance may be affected.

6. Adequately insulate and weatherproof all ductwork located outdoors. Insulate ducts passing through unconditioned space, and use vapor barrier in accordance with latest issue of Sheet Metal and Air Conditioning Contractors National Association (SMACNA) and Air Conditioning Contractors of America (ACCA) minimum installation standards for heating and air conditioning systems. Secure all ducts to building structure.
7. Flash, weatherproof, and vibration-isolate all openings in building structure in accordance with local codes and good building practices.

Step 10 — Install Electrical Connections

⚠ WARNING

ELECTRICAL SHOCK HAZARD

Failure to follow this warning could result in personal injury or death.

The unit cabinet must have an uninterrupted, unbroken electrical ground. This ground may consist of an electrical wire connected to the unit ground screw in the control compartment, or conduit approved for electrical ground when installed in accordance with NEC, ANSI/NFPA American National Standards Institute/National Fire Protection Association (latest edition) (in Canada, Canadian Electrical Code CSA C22.1) and local electrical codes.

⚠ CAUTION

UNIT COMPONENT DAMAGE HAZARD

Failure to follow this caution could result in damage to the unit being installed.

1. Make all electrical connections in accordance with NEC ANSI/NFPA (latest edition) and local electrical codes governing such wiring. In Canada, all electrical connections must be in accordance with CSA standard C22.1 Canadian Electrical Code Part 1 and applicable local codes. Refer to unit wiring diagram.
2. Use only copper conductor for connections between field-supplied electrical disconnect switch and unit. DO NOT USE ALUMINUM WIRE.
3. Be sure that high-voltage power to unit is within operating voltage range indicated on unit rating plate. On 3-phase units, ensure phases are balanced within 2 percent. Consult local power company for correction of improper voltage and/or phase imbalance.
4. Insulate low-voltage wires for highest voltage contained within conduit when low-voltage control wires are in same conduit as high-voltage wires.
5. Do not damage internal components when drilling through any panel to mount electrical hardware, conduit, etc.

HIGH-VOLTAGE CONNECTIONS

The unit must have a separate electrical service with a field-supplied, waterproof, disconnect switch mounted at, or within sight from, the unit. Refer to the unit rating plate for maximum fuse/circuit breaker size and minimum circuit amps (ampacity) for wire sizing.

The field-supplied disconnect switch box may be mounted on the unit over the high-voltage inlet hole when the standard power and low-voltage entry points are used (See Fig. 2 and 3 for acceptable location).

See unit wiring label and Fig. 10 for reference when making high voltage connections. Proceed as follows to complete the high voltage connections to the unit.

Single phase units:

1. Run the high-voltage (L1, L2) and ground leads into the control box.
2. Connect ground lead to chassis ground connection.
3. Connect L1 to pressure lug connection 11 of the compressor contactor.
4. Connect L2 to pressure lug connection 23 of the compressor contactor.

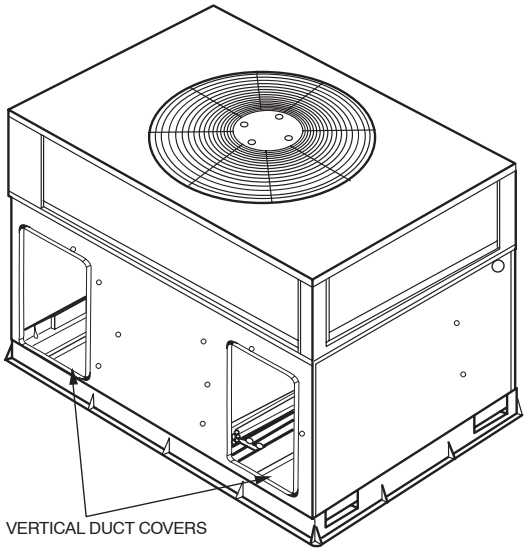

Fig. 10 - Vertical Duct Cover Removed

Three-phase units:

1. Run the high-voltage (L1, L2, L3) and ground leads into the control box.
2. Connect ground lead to chassis ground connection.
3. Locate the black and yellow wires connected to the lines side of the contactor.
4. Connect field L1 to black wire on connection 11 of the compressor contactor.
5. Connect field wire L2 to yellow wire on connection 13 of the compressor contactor.
6. Connect field wire L3 to Blue wire from compressor.

SPECIAL PROCEDURES FOR 208-V OPERATION

⚠ WARNING

ELECTRICAL SHOCK HAZARD

Failure to follow this warning could result in personal injury or death.

Make sure the power supply to the unit is switched OFF before making any wiring changes. With disconnect switch open, move black wire from transformer (3/16 in.) terminal marked 230 to terminal marked 230. This retaps transformer to primary voltage of 208 vac.

⚠ WARNING

ELECTRICAL SHOCK HAZARD

Failure to follow this warning could result in personal injury or death.

Before making any wiring changes, **make sure** the gas supply is switched off first. *Then* switch off the power supply to the unit and install lockout tag.

CONTROL VOLTAGE CONNECTIONS

Do not use any type of power-stealing thermostat. Unit control problems may result.

Use no. 18 American Wire Gage (AWG) color-coded, insulated (35 C minimum) wires to make the control voltage connections between the thermostat and the unit. If the thermostat is located more than 100 ft (30 m) from the unit (as measured along the control voltage wires), use no. 16 AWG color-coded, insulated (35 C minimum) wires.

Remove knockout hole located in the heat section panel adjacent to the service access panel. Remove the rubber grommet from the installer's packet and install grommet in the knockout opening. Provide a drip loop before running wire through panel. Run the low-voltage leads from the thermostat, through the inlet hole, and into unit low-voltage splice box. Locate 18-gage wires leaving control box. These low-voltage connection leads can be identified by colors (See Fig. 11). Ensure the leads are long enough to be routed into the low-voltage splice box (located below right side of control box). Route leads through hole in bottom of control box and make low-voltage connections (See Fig. 10). Secure all cut wires, so that they do not interfere with operation of unit.

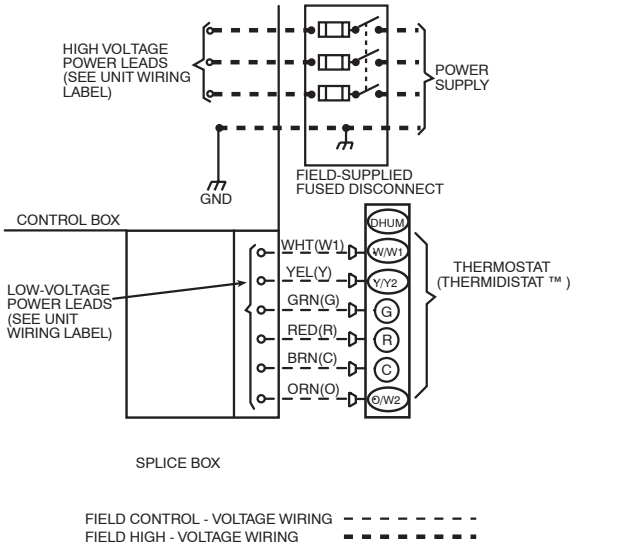

Fig. 11 - High and Control-Voltage Connections

BALANCE POINT SETTING-THERMIDISTAT OR HYBRID THERMOSTAT

BALANCE POINT TEMPERATURE-The "balance point" temperature is a setting which affects the operation of the heating mode. This is a field-selected input temperature (range 5-55°F) (-15-12°C) where the Thermidistat or dual fuel thermostat will monitor outdoor air temperature and decide whether to enable or disable the heat pump. If the outdoor temperature is above the "balance point", the heat pump will energize first to try to satisfy the indoor temperature demand. If the heat pump does not make a sufficient improvement within a reasonable time period (i.e. 15 minutes), then the gas furnace will come on to satisfy the indoor temperature demand. If the outdoor temperature is below the "balance point", the heat pump will not be allowed to operate (i.e. locked out), and the gas furnace will be used to satisfy the indoor temperature. There are three separate concepts which are related to selecting the final "balance point" temperature. Read each of the following carefully to determine the best "balance point" in a hybrid installation:

1. Capacity Balance Temperature: This is a point where the heat pump cannot provide sufficient capacity to keep up with the indoor temperature demand because of declining outdoor temperature. At or below this point, the furnace is needed to maintain proper indoor temperature.
2. Economic Balance Temperature: Above this point, the heat pump is the most cost efficient to operate, and below this point the furnace is the most cost efficient to operate. This can be somewhat complicated to determine and it involves knowing the cost of gas and electricity, as well as the efficiency of the furnace and heat pump. For the most economical operation, the heat pump should operate above this temperature (assuming it has sufficient capacity) and the furnace should operate below this temperature.
3. Comfort Balance Temperature: When the heat pump is operating below this point, the indoor supply air feels uncomfortable (i.e. too cool). This is purely subjective and will depend on the homeowner's idea of comfort. Below this temperature the gas furnace should operate in order to satisfy the desire for indoor comfort.

Easy Select™ - 674D

EASY SELECT™ CONFIGURATION TAPS FOR 674D

Easy Select taps are used by the installer to configure a system. The ECM motor uses the selected taps to modify its operation to a pre-programmed table of airflows.

The unit must be configured to operate properly with system components with which it is installed. To successfully configure a basic system (see information printed on circuit board label located next to select pins), move the 6 select wires to the pins which match the components used (See Fig. 12).

a. GAS HEAT/CFM-SELECT GAS HEAT INPUT SIZE Factory selected gas heat size should correspond to unit label.
b. AC/HP SIZE- SELECT SYSTEM SIZE INSTALLED
   Factory selected air conditioner size should correspond to capacity of unit installed. Installer should verify air conditioner size to ensure that airflow delivered falls within proper range for the size unit installed. This applies to all operational modes.
c. SYSTEM TYPE-SELECT SYSTEM TYPE INSTALLED
   Factory selected on 674D for AC-Air conditioner. For Gas Heat/Electric Cool Unit-AC must be selected.
d. AC/HP CFM ADJUST-SELECT NOMINAL, LOW, OR HIGH AIRFLOW
   The AC/HP CFM Adjust select is factory set to the NOM tap. The CFM Adjust selections NOM/LO will regulate airflow supplied for all operational modes, except non-heat pump heating modes. HI provides 15 percent airflow over nominal unit size selected and LO provides 10 percent airflow below nominal unit size selected. Adjust selection options are provided to adjust airflow supplied to meet individual installation needs for such things as noise, comfort, and humidity removal (See Fig. 12, D as indicated).

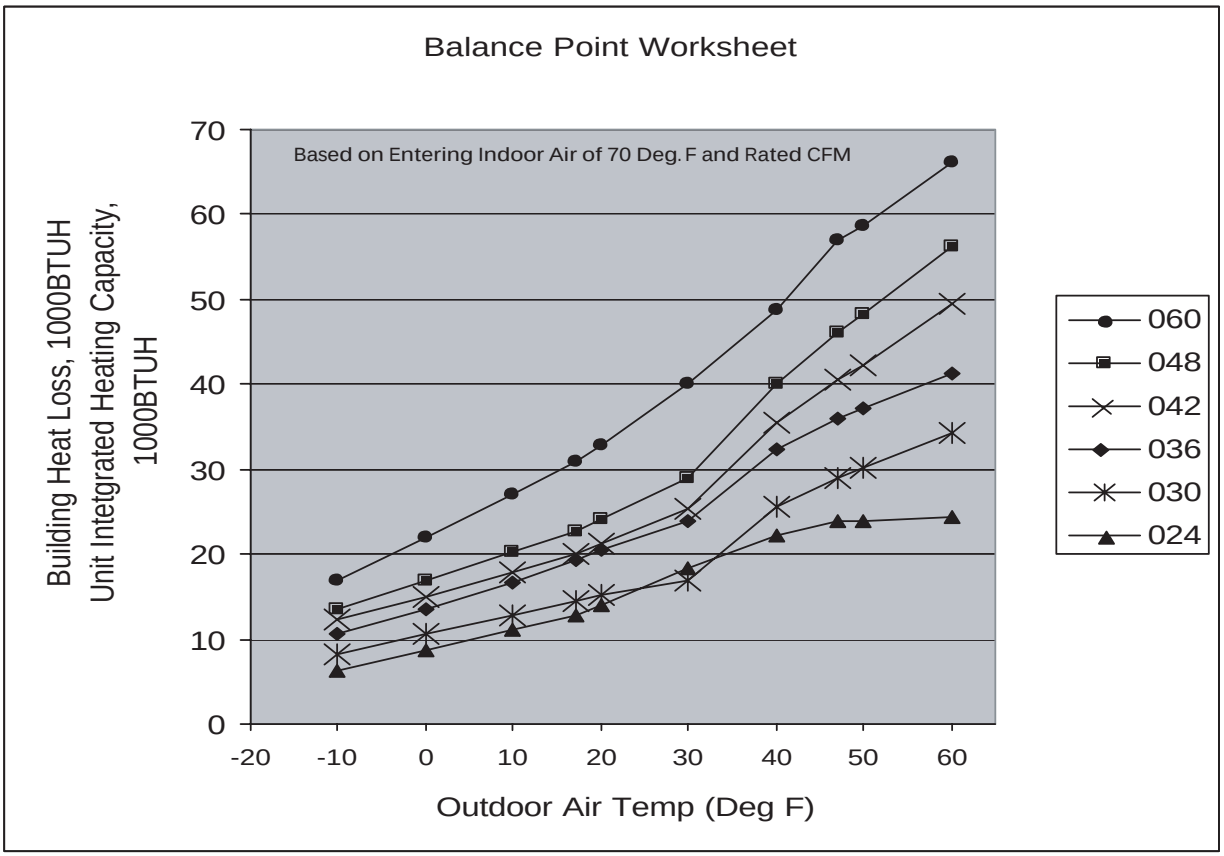

C03008

Balance Point Worksheet

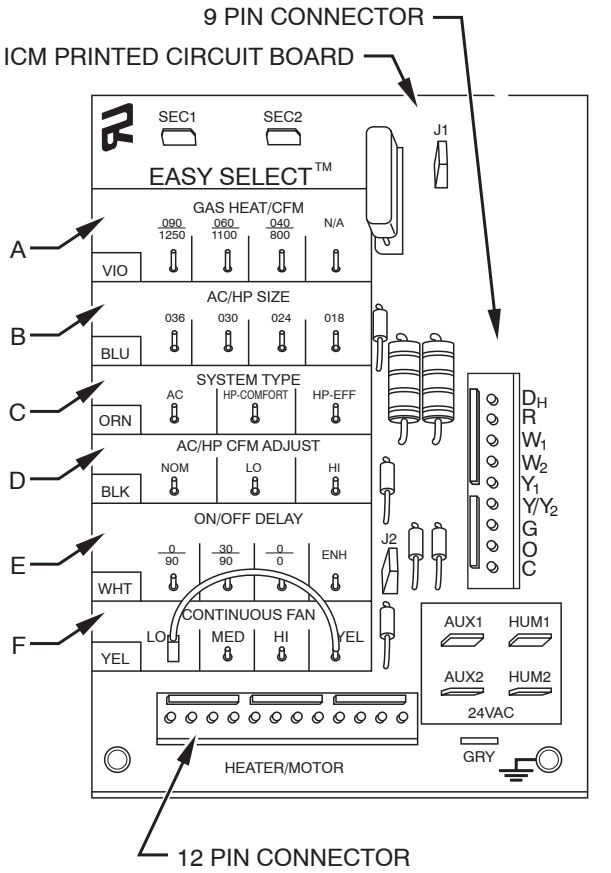

C01039

Fig. 12 - Detail of SPP Printed-Circuit Board

e. ON/OFF DELAY- SELECT DESIREDTIME DELAY PROFILE
Four motor operation delay profiles are provided to customize and enhance system operation (See Fig. 12, E as indicated).
Selection options are:

(1.) The standard 90 sec off delay (Factory Setting) at 100 percent airflow in cooling mode. In heating mode, IGC will control 45 sec on delay with no airflow and 45 sec off delay.

(2.) A 30 sec cooling delay with no airflow/ 90 sec off delay at 100 percent airflow profile is used when it is desirable to allow system coils time to cool-down in conjunction with the airflow in heating mode.

(3.) A no delay option used for servicing unit or when a thermostat is utilized to perform delay functions in cooling mode. In heating mode IGC will control 45 sec on delay with no airflow and 45 sec off delay.

(4.) ENH- Not recommended for 674D

f. CONTINUOUS FAN-Select desired fan speed when thermostat is set on continuous fan

(1.) LO speed-Factory setting, 50 percent cooling mode airflow.

(2.) MED speed-Move connector to MED, 65 percent cooling mode airflow.

(3.) HI speed-Move connector to HI, 100 percent cooling mode airflow (See Fig. 12, F as indicated).

g. LOW-VOLTAGE CIRCUIT FUSING AND REFERENCE
The low-voltage circuit is fused by a board-mounted 5-amp automotive fuse placed in series with the

transformer SEC2 and the R circuit. The C circuit of the transformer is referenced to chassis ground through a printed circuit run at SEC1 connected to metal standoff marked with ground symbol.

h. BASIC UNIT CONFIGURATION
The following basic configuration of the indoor motor will provide ARI rated performance of the 674D. This BASIC CONFIGURATION should be used when the rated ARI performance is required, or if system enhancements such as super dehumidify are not needed.

(1.) HEAT-Factory selected to match heat input size.
(2.) AC/HP Size-Factory selected to match system size, please verify.
(3.) SYSTEM TYPE-Factory selected on 674D system AC-AIR CONDITIONER.
(4.) AC/HP CFM ADJUST-Select NOM.
(5.) ON/OFF DELAY-Factory selected 0/90 profile. (Do Not Use ENH profile for Gas Packaged Units)
(6.) CONTINUOUS FAN-Select desired fan speed when thermostat is set to continuous fan.

i. COMFORT OPTIONS-SUPER DEHUMIDIFY (See Quick Reference Guide)
The Super Dehumidify option is possible when this unit is installed with a field supplied Thermidistat™ control (SuperDehumidify does not require an outdoor temperature sensor). The following configuration is recommended for maximum cooling/dehumidifying comfort. This configuration will improve the comfort provided by the air conditioning system if more humidity removal is desired. While providing this improved comfort, the system will operate efficiently, but not at the published ARI SEER efficiency. During cool-to-dehumidify call, it provides maximum dehumidification by reducing airflow to a minimum. The actual super dehumidify command from Thermidistat control to the indoor unit is a "Y" signal without a "G" signal in addition to dehumidify signal. The indoor unit responds to this combination by reducing the airflow to a minimum. All other characteristics of cool to dehumidify are the same. The following system configuration is recommended for maximum cooling/dehumidifying comfort (See Fig. 12).

(1.) HEAT-Factory selected to match gas heat size of unit installed.
(2.) AC/HP Size-Factory selected to match system size, please verify.
(3.) SYSTEM TYPE-Factory selected on 674D system AC-AIR CONDITIONER.
(4.) AC/HP CFM ADJUST-Select NOM.
(5.) ON/OFF DELAY-Select "0/0" profile.
(6.) CONTINUOUS FAN-Select desired fan speed when thermostat is set to continuous fan.
(7.) DEHUMIDIFY MODE-Remove J1 jumper to activate.

NOTE: J1 jumper should only be removed when a Thermidistat, humidistat or capable zoning control is installed.

(8.) LOW VOLTAGE CONNECTIONS-Make connections as shown in ELECTRICAL CONNECTIONS section.
(9.) CONFIGURE THERMIDISTAT-Follow Thermidistat (or capable zoning system) installation instructions for Super Dehumidify operation.

ACCESSORY INSTALLATION

a. AUXILIARY TERMINALS The AUX and HUM terminals on the Easy Select Board are tied directly to the G terminal, and provide a 24-v. signal whenever the G terminal is energized (See Fig. 12). During Super dehumidify mode, the G signal is not present and the auxiliary terminals are not energized. If the installation includes the use of this operating mode, do not use these terminals to control accessories. See Electronic Air Cleaner and Humidifier sections for further information.

b. ELECTRONIC AIR CLEANER CONNECTIONS The AUX1 and AUX2 terminals are not always energized during blower operations, as described above. When using an electronic air cleaner with the unit, use Airflow Sensor (See Air Cleaner Price Pages for Part Number). The airflow sensor turns on electronic air cleaner when the blower is operating.

c. HUMIDIFIER/HUMIDISTAT CONNECTIONS Easy Select Board terminals HUM1 and HUM2 are provided for direct connection to the low-voltage control of a humidifier through a standard humidistat (See Fig. 12). These terminals are energized with 24-v. when G thermostat signal is present (See Fig. 13 & 14). Alternately, the 24-v. signal may be sourced from the W and C on the 9 pin connector. When using a Thermidistat Control, Zone Comfort Plus or Comfort Zone II, the 24-v. signal may be sourced directly from the Thermidistat HUM terminal (See Fig. 12, 13 & 14).

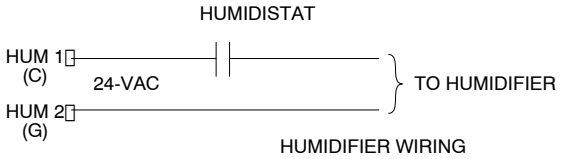

A95317

Fig. 13 - Humidifier Wiring - 674D

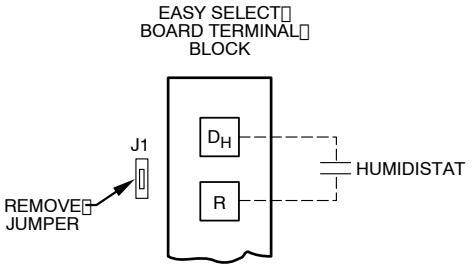

A95316

Fig. 14 - Humidistat Wiring for De-Humidify Mode - 674D

d. DEHUMIDIFY CAPABILITY WITH STANDARD HUMIDISTAT CONNECTION
Latent capacities for this unit are better than average systems. If increased latent capacity is an application requirement, the ECM board provides connection terminals for use of a standard humidistat. The unit will detect the humidistat contacts opening on increasing humidity and reduce its airflow to approximately 80 percent of nominal cooling mode airflow. This reduction will increase the system latent capacity until the humidity falls to a level which causes the humidistat to close its contacts. When the contacts close, the airflow will return to 100 percent of selected cooling airflow. To activate this mode, remove jumper J1 and wire in a standard humidistat (See Fig. 14).

e. DEHUMIDIFY AND SUPER DEHUMIDIFY CAPABILITIES
This model unit is capable of responding to a signal from indoor system control (Thermidistat or capable zoning control) to operate in comfort control modes such as Super Dehumidify Mode. Consult literature provided with indoor system control to determine if these operating modes are available, and to see control set up instructions. No special setup or wiring of unit is required.

TRANSFORMER PROTECTION

The transformer is of the energy-limiting type. It is set to withstand a 30-sec. overload or shorted secondary condition.

PRE-START-UP

⚠ WARNING

FIRE, EXPLOSION, ELECTRICAL SHOCK HAZARD

Failure to follow this warning could result in personal injury, death or property damage.

1. Follow recognized safety practices and wear protective goggles when checking or servicing refrigerant system.
2. Do not operate compressor or provide any electric power to unit unless compressor terminal cover is in place and secured.
3. Do not remove compressor terminal cover until all electrical sources are disconnected and tagged.
4. Relieve and recover all refrigerant from system before touching or disturbing anything inside terminal box if refrigerant leak is suspected around compressor terminals.
5. Never attempt to repair soldered connection while refrigerant system is under pressure.
6. Do not use torch to remove any component. System contains oil and refrigerant under pressure.
   To remove a component, wear protective goggles and proceed as follows:
   a. Shut off electrical power to unit and install lockout tag.
   b. Relieve and reclaim all refrigerant from system using both high- and low-pressure ports.
   c. Cut component connecting tubing with tubing cutter and remove component from unit.
   d. Carefully unsweat remaining tubing stubs when necessary. Oil can ignite when exposed to torch flame.

Proceed as follows to inspect and prepare the unit for initial startup:

1. Remove access panel.
2. Read and follow instructions on all WARNING, CAUTION, and INFORMATION labels attached to, or shipped with, unit.
3. Make the following inspections:
   a. Inspect for shipping and handling damages such as broken lines, loose parts, disconnected wires, etc.
   b. Inspect for oil at all refrigerant tubing connections and on unit base. Detecting oil generally indicates a refrigerant leak.
   c. Leak test all refrigerant tubing connections using electronic leak detector, halide torch, or liquid-soap solution. If a refrigerant leak is detected, see the Check for Refrigerant Leaks section.
   d. Inspect all field- and factory-wiring connections. Be sure that connections are completed and tight.
   e. Inspect coil fins. If damaged during shipping and handling, carefully straighten fins with a fin comb.
4. Verify the following conditions:

⚠ WARNING

FIRE, EXPLOSION HAZARD

Failure to follow this warning could result in personal injury, death or property damage.

Do not purge gas supply into the combustion chamber. Do not use a match or other open flame to check for gas leaks.

   a. Make sure gas line is free of air. Before lighting the unit for the first time, perform the following with the gas valve in the "OFF" position:
   If the gas supply pipe was not purged before connecting the unit, it will be full of air. It is recommended that the ground joint union be loosened, and the supply line be allowed to purge until the odor of gas is detected. Never purge gas lines into a combustion chamber. Immediately upon detection of gas odor, retighten the union. Allow 5 minutes to elapse, then light unit.
   b. Make sure that condenser-fan blade is correctly positioned in fan orifice. Leading edge of condenser-fan blade should be 1/2 in. (12 mm) maximum from fan orifice.
   c. Ensure fan hub is 1/8 in. (3 mm) maximum from motor housing (See Fig. 15).
   d. Make sure that air filter(s) is in place.
   e. Make sure that condensate drain trap is filled with water to ensure proper drainage.
   f. Make sure that all tools and miscellaneous loose parts have been removed.

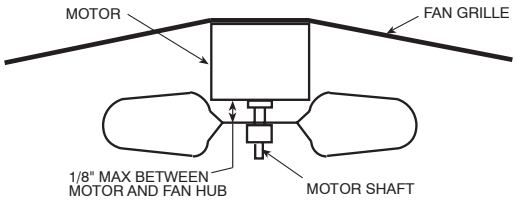

Fig. 15 - Fan Blade Clearance

START-UP

Step 1 — CHECK FOR REFRIGERANT LEAKS

Proceed as follows to locate and repair a refrigerant leak and to charge the unit:

1. Locate leak and make sure that refrigerant system pressure has been relieved and reclaimed from both high- and low-pressure ports.
2. Repair leak following Refrigerant Service procedures.

NOTE: Install a filter drier whenever the system has been opened for repair.

3. Add a small charge of R-410A refrigerant vapor to system and leak-test unit.
4. Evacuate and recover refrigerant from refrigerant system if additional leaks are not found.
5. Charge unit with R-410A refrigerant, using a volumetriccharging cylinder or accurate scale. Refer to unit rating plate for required charge. Be sure to add extra refrigerant to compensate for internal volume of filter drier.

Step 2 — UNIT SEQUENCE OF OPERATION

674D Sequence of Operation

a. CONTINUOUS FAN

(1.) Thermostat closes circuit R to G-The Blower runs at continuous fan airflow.

b. COOLING MODE

(1.) If indoor temperature is above temperature set point and humidity is below humidity set point, thermostat closes circuits R to G, R to Y/Y2 and R to O-The unit delivers single speed cooling airflow.

c. COOLING MODE-DEHUMIDIFICATION

(1.) If indoor temperature is above temperature set point and humidity is above humidity set point, thermostat or Thermidistat closes circuits R to G, R to Y/Y2, R to O and humidistat or Thermidistat opens R to DH-The unit delivers airflow which is approximately 80 percent of the nominal cooling airflow to increase the latent capacity of the system.

d. COOLING MODE-SUPER DEHUMIDIFY OPERATION (SEE QUICK REFERENCE GUIDE)

NOTE: The indoor control used, such as a Thermidistat, must be capable of providing Super Dehumidify operation mode and control must be configured as outlined in its installation instructions. Consult indoor control literature to determine if control is capable of providing Super Dehumidify inputs and for configuration instruction.

(1.) If the indoor temperature is below the temperature set point and the humidity is above the humidity set point, the Thermidistat closes circuit R to O, opens circuits R to DH and R to G, and closes circuit R to Y/Y2. If circuit R to G is closed (24-v.), the motor will deliver airflow at the full cooling or cooling plus dehumidify mode requested value. If circuit R to G is open (0-v.) for Super Dehumidify mode, the motor delivers reduced airflow to maximize the humidity removal of the system while minimizing over cooling.

e. HEAT PUMP HEATING MODE

Outdoor temperature above balance point setpoint of Thermidistat™ (option 11).

(1.) On a call for heating, terminals "Y" and "G" of the Thermidistat or Hybrid thermostat are energized. The "Y" signal is sent to the Defrost Board (DB) terminal "Y". The DB has a built in five minute anti-short cycle timer which will not allow the compressor to restart before the time delay has expired.

(2.) "T2" energizes the compressor contactor via the High Pressure Switch (HPS) and Low Pressure Switch (LPS). The compressor and outdoor fan start. Thermidistat "G" energizes the Integrated Gas Control (IGC) terminal "G". The blower motor is energizedthrough the "BM" and "L2" terminals of the IGC.

(3.) When the Thermidistat removes the "Y" and "G" calls, the compressor contactor and outdoor fan and evaporator motor are de-energized.

f. GAS HEATING MODE

Outdoor temperature below balance point setpoint of Thermidistat (option 11).

(1.) On a call for heating, terminal "W" of the Thermidistat or Hybrid Heat thermostat is energized, starting the induced-draft motor. When the hall-effect sensor on the induced-draft motor senses that it has reached the required speed, the burner sequence begins. This function is performed by the integrated gas control (IGC).

(2.) The indoor-fan motor is energized 45 sec. after flame is established.

(3.) When the thermostat is satisfied and "W" is deenergized, the burners stop firing and the indoor-fan motor shuts off after a 45-sec. time-off delay.

NOTE: An LED (light-emitting diode) indicator is provided on the control board to monitor operation. The control board is located by removing the burner access panel. During normal operation, the LED is continuously on.

Step 3 — START-UP HEATING AND MAKE ADJUSTMENTS

⚠ CAUTION

UNIT COMPONENT DAMAGE HAZARD

Failure to follow this caution may result in damage to the unit being installed.

Complete the required procedures given in the Pre-Start-Up section before starting the unit. Do not jumper any safety devices when operating the unit.

Make sure that burner orifices are properly aligned. Unstable operation may occur when the burner orifices in the manifold are misaligned.

Follow the lighting instructions on the heating section operation label (located inside the burner or blower access door) to start the heating section.

NOTE: Make sure that gas supply has been purged, and that all gas piping has been checked for leaks.

CHECK HEATING CONTROL

Start and check the unit for proper cooling control operation as follows (see furnace lighting instructions located inside burner or blower access panel):

1. Place room thermostat SYSTEM switch in the HEAT position and the fan switch is placed in AUTO position.
2. Set the heating temperature control of the thermostat above room temperature.
3. The induced-draft motor will start.
4. After a call for heating, the main burner should light within 5 sec. If the burners do not light, there is a 22-sec. delay before another 5-sec. try. If the burners still do not light, this sequence is repeated. If the burners do not light within 15 minutes from the initial call for heat, there is a lockout. To reset the control, break the 24-v power to W.
5. The evaporator fan will turn on 45 sec. after the flame has been established. The evaporator fan will turn off 45 sec. after the thermostat has been satisfied.

CHECK GAS INPUT

Check gas input and manifold pressure after unit start-up (See Table 3). If adjustment is required proceed as follows:

- The rated gas inputs shown in Table 3 are for altitudes from sea level to 2000 ft above sea level. These inputs are based on natural gas with a heating value of 1050 Btu/ft^3 at 0.65 specific gravity, or propane gas with a heating value of 2500 Btu/ft^3 at 1.5 specific gravity.
- For elevations above 2000 ft, reduce input 4% for each 1000 ft above sea level.

- When the gas supply being used has a different heating value or specific gravity, refer to national and local codes, or contact your distributor to determine the required orifice size.

⚠ CAUTION

UNIT DAMAGE HAZARD

Failure to follow this caution may result in reduced unit and/or component life.

Do Not redrill an orifice. Improper drilling (burrs, out-of-round holes, etc.) can cause excessive burner noise and misdirection of burner flame. If orifice hole appears damaged or it is suspected to have been redrilled, check orifice hole with a numbered drill bit of correct size.

ADJUST GAS INPUT

The gas input to the unit is determined by measuring the gas flow at the meter or by measuring the manifold pressure. Measuring the gas flow at the meter is recommended for natural gas units. The manifold pressure must be measured to determine the input of propane gas units.

Measure Gas Flow (Natural Gas Units)

Minor adjustment to the gas flow can be made by changing the manifold pressure. The manifold pressure must be maintained between 3.4 and 3.6 in. wc. If larger adjustments are required, change main burner orifices following the recommendations of national and local codes.

NOTE: All other appliances that use the same meter must be turned off when gas flow is measured at the meter. Proceed as follows:

1. Turn off gas supply to unit.
2. Remove pipe plug on manifold (See Fig. 16) and connect manometer. Turn on gas supply to unit.

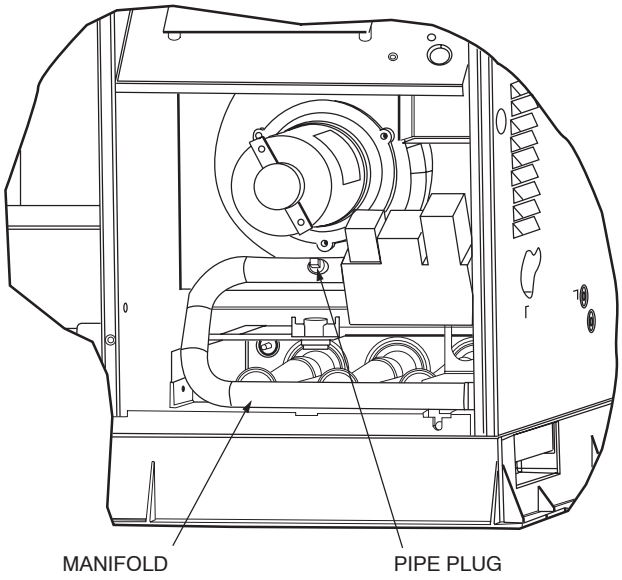

Fig. 16 - Burner Assembly

3. Record number of seconds for gas meter test dial to make one revolution.
4. Divide number of seconds in Step 3 into 3600 (number of seconds in one hr).
5. Multiply result of Step 4 by the number of cu ft shown for one revolution of test dial to obtain ft^3 of gas flow per hr.
6. Multiply result of Step 5 by Btu heating value of gas to obtain total measured input in Btuh. Compare this value with heating input shown in Table 3 (Consult the local gas supplier if the heating value of gas is not known).

EXAMPLE: Assume that the size of test dial is 1 ft^3, one revolution takes 32 sec., and the heating value of the gas is 1050 Btu/ft3. Proceed as follows:

1. 1. 32 sec. to complete one revolution.
2. 3600 ÷ 32 = 112.5.
3. 112.5 x 1 =112.5 ft^3 of gas flow/hr.
4. 112.5 x 1050 = 118,125 Btuh input.

If the desired gas input is 115,000 Btuh, only a minor change in the manifold pressure is required.

Observe manifold pressure and proceed as follows to adjust gas input:

1. Remove cover screw over regulator adjustment screw on gas valve.
2. Turn regulator adjustment screw clockwise to increase gas input, or turn regulator adjustment screw counterclockwise to decrease input. Manifold pressure must be between 3.4 and 3.6 in. wc. Unsafe operation of the unit may result if manifold pressure is outside this range. Personal injury or unit damage may result.

⚠ WARNING

FIRE AND UNIT DAMAGE HAZARD

Failure to follow this warning could result in personal injury or death and/or property damage.

Unsafe operation of the unit may result if manifold pressure is outside this range.

3. Replace cover screw cap on gas valve.
4. Turn off gas supply to unit. Remove manometer from pressure tap and replace pipe plug on gas valve. Turn on gas to unit and check for leaks.

Measure Manifold Pressure (Propane Units)

The main burner orifices on a propane gas unit are sized for the unit rated input when the manifold pressure reading matches the level specified in Table 3.

Proceed as follows to adjust gas input on a propane gas unit:

1. Turn off gas to unit.
2. Remove pipe plug on manifold and connect manometer (See Fig. 16).
3. Turn on gas to unit.
4. Remove cover screw over regulator adjustment screw on gas valve.
5. Adjust regulator adjustment screw to the correct manifold pressure, as specified in Table 3. Turn adjusting screw clockwise to increase manifold pressure, or turn adjusting screw counterclockwise to decrease manifold pressure.
6. Replace cover screw.
7. Turn off gas to unit. Remove manometer from pressure tap. Replace pipe plug on gas valve, then turn on gas to unit. Check for leaks.

CHECK BURNER FLAME

With burner access panel removed, observe the unit heating operation. Watch the burner flames to see if they are light blue and soft in appearance, and that the flames are approximately the same for each burner. Propane will have blue flame with yellow tips (See Fig. 17). Refer to the Maintenance section for information on burner removal.

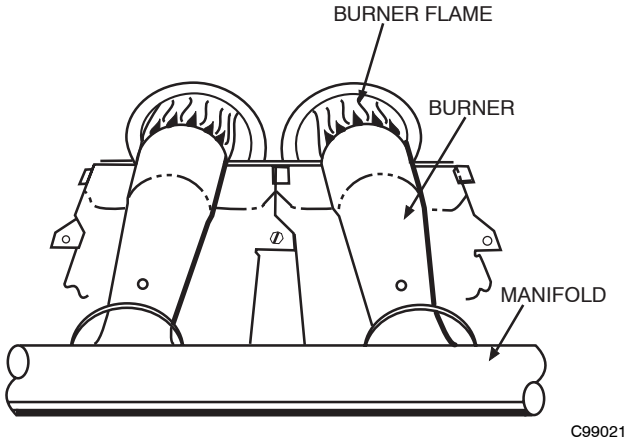

Fig. 17 - Monoport Burner

AIRFLOW AND TEMPERATURE RISE

The heating section for each size unit is designed and approved for heating operation within the temperature-rise range stamped on the unit rating plate.

Table 4 shows the approved temperature rise range for each heating input, and the air delivery cfm at various temperature rises. The heating operation airflow must produce a temperature rise that falls within the approved range.

Refer to Indoor Airflow and Airflow Adjustments section to adjust heating airflow when required.

LIMIT SWITCHES

Normally closed limit switch (LS) completes the control circuit through the thermostat R circuit. Should the leaving-air temperature rise above the maximum allowable temperature, the limit switch opens and the R control circuit "breaks." Any interruption in the R control circuit instantly closes the gas valve and stops gas flow to the burners and pilot. The blower motor continues to run until LS resets.

When the air temperature at the limit switch drops to the low-temperature setting of the limit switch, the switch closes and completes the R control circuit. The electric-spark ignition system cycles and the unit returns to normal heating operation.

AUXILIARY LIMIT SWITCH (ROLLOUT)

The function of the switch is to close the main gas valve in the event of flame rollout. The switch is located above the main burners. When the temperature at the auxiliary switch reaches the maximum allowable temperature, the R control circuit trips, closing the gas valve and stopping gas flow to the burners. The indoor (evaporator) fan motor (IFM) and induced draft motor continue to run until switch is reset. The IGC LED will display FAULT CODE 7.

Step 4 — START-UP COOLING AND MAKE ADJUSTMENTS

⚠ WARNING

UNIT DAMAGE HAZARD

Failure to follow this warning could result in unit component damage.

Complete the required procedures given in the Pre-Start-Up section before starting the unit. Do not jumper any safety devices when operating the unit. Do not operate the compressor when the outdoor temperature is below 55°F (12°C) (unless accessory low-ambient kit is installed). Do not rapid-cycle the compressor. To prevent compressor damage allow 5 minutes between "on" cycles.

CHECKING COOLING CONTROL OPERATION

Start and check the unit for proper cooling control operation as follows:

1. Place room thermostat SYSTEM switch in OFF position. Observe that blower motor starts when FAN switch is placed in ON position and shuts down when FAN switch is placed in AUTO position.
2. Place SYSTEM switch in COOL position and FAN switch in AUTO. position. Set cooling control below room temperature. Observe that compressor, condenser fan, and evaporator blower motors start. Observe that cooling cycle shuts down when control setting is satisfied. The evaporator fan will continue to run for the time selected on the Easy Select board.
3. When using an auto-changeover room thermostat, place both SYSTEM and FAN switches in AUTO. positions. Observe that unit operates in Heating mode when temperature control is set to "call for heating" (above room temperature) and operates in Cooling mode when temperature control is set to "call for cooling" (below room temperature).

IMPORTANT: Three-phase, scroll compressor units are direction-oriented. These units must be checked to ensure proper compressor 3-phase power lead orientation. If not corrected within 5 minutes, the internal protector shuts off the compressor. The 3-phase power leads to the unit must be reversed to correct rotation. When turning backwards, scroll compressors emit elevated noise levels, and the difference between compressor suction and discharge pressures may be near zero.

CHECKING AND ADJUSTING REFRIGERANT CHARGE

The refrigerant system is fully charged with R-410A refrigerant, tested, and factory-sealed.

NOTE: Adjustment of the refrigerant charge is not required unless the unit is suspected of not having the proper R-410A charge.

An accurate superheat, thermocouple- or thermistor-type thermometer, a sling psychrometer, and a gauge manifold are required when using the superheat charging method for evaluating the unit charge. Do not use mercury or small dial-type thermometers because they are not adequate for this type of measurement.

⚠ CAUTION

UNIT DAMAGE HAZARD

Failure to follow this caution may result in unit damage.

When evaluating the refrigerant charge, an indicated adjustment to the specified factory charge must always be very minimal. If a substantial adjustment is indicated, an abnormal condition exists somewhere in the cooling system, such as insufficient airflow across either coil or both coils.

To Use Cooling Charging Charts

Take the liquid line temperature and read the manifold pressure gauges. Refer to the chart (See Fig. 20) to determine what the liquid line temperature should be.

NOTE: If the problem causing the inaccurate readings is a refrigerant leak, refer to the Check for Refrigerant Leaks section.

Table 5 – LED Indications

ERROR CODE	LED INDICATION
Normal Operation	On
Hardware Failure	Off
Fan On/Off Delay Modified	1 Flash
Limit Switch Fault	2 Flashes
Flame Sense Fault	3 Flashes
Four Consecutive Limit Switch Faults	4 Flashes
Ignition Lockout Fault	5 Flashes
Induced-Draft Motor Fault	6 Flashes
Rollout Switch Fault	7 Flashes
Internal Control Fault	8 Flashes
Safety Critical Code Fault	9 Flashes

NOTES:
1. There is a 3–sec. pause between error code displays.
2. If more than one error code exists, all applicable error codes will be displayed in numerical sequence.
3. This chart is on the wiring diagram located inside the burner access panel.

Table 6 – Filter Pressure Drop Table (in. wc)

FILTER SIZE	CFM																		
	500	600	700	800	900	1000	1100	1200	1300	1400	1500	1600	1700	1800	1900	2000	2100	2200	2300
20X20X1	0.05	0.07	0.08	0.1	0.12	0.13	0.14	0.15	—	—	—	—	—	—	—	—	—	—	—
24X30X1	—	—	—	0.04	0.05	0.06	0.07	0.07	0.08	0.09	0.1	—	—	—	—	—	—	—	—
24X36X1	—	—	—	—	—	—	—	0.06	0.07	0.07	0.08	0.09	0.09	0.10	0.11	0.12	0.13	0.14	0.14

Table 7 – 674D Cooling (and Heat Pump Heating) Dry Coil ECM Airflow
Small Cabinet

UNIT SIZE	CFM ADJUST PIN SELECT	LO PIN			NOM PIN			HI PIN		
	EXTERNAL STATIC PRESSURE RANGE (in. wc)	0.0–0.4	0.4–0.7	0.7–1.0	0.0–0.4	0.4–0.7	0.7–1.0	0.0–0.4	0.4–0.7	0.7–1.0
024	COOLING*	745	675	–	835	750	690	940	880	815
	COOLING DEHUMIDIFY	675	625	–	675	650	600	755	730	705
	HEAT PUMP COMFORT	670	605	–	740	690	635	845	795	735
030	COOLING*	940	860	785	1020	965	895	1185	1100	1010
	COOLING DEHUMIDIFY	820	785	735	820	800	770	955	920	880
	HEAT PUMP COMFORT	850	780	745	935	905	845	1055	1040	955
036	COOLING*	1025	935	–	1145	1085	1005	1320	1260	1180
	COOLING DEHUMIDIFY	925	885	–	925	900	870	1060	1040	1010
	HEAT PUMP COMFORT	955	880	–	1075	990	920	1220	1180	1125

*Heat Pump Efficiency and Cooling pin selections deliver equal airflow.

Table 8 – 674D Cooling (and Heat Pump Heating) Dry Coil ECM Airflow
Large Cabinet

UNIT SIZE	CFM ADJUST PIN SELECT	LO PIN	NOM PIN	HI PIN
	EXTERNAL STATIC PRESSURE RANGE (in. wc)	0.1–1.0	0.1–1.0	0.1–1.0
042	COOLING*	1100	1225	1410
	COOLING DEHUMIDIFY	980	980	1125
	HEAT PUMP COMFORT	990	1100	1265
048	COOLING*	1260	1400	1610
	COOLING DEHUMIDIFY	1120	1120	1290
	HEAT PUMP COMFORT	1135	1260	1450
060	COOLING*	1575	1750	2010
	COOLING DEHUMIDIFY	1400	1400	1610
	HEAT PUMP COMFORT	1415	1575	1810

*Heat Pump Efficiency and Cooling pin selections deliver equal airflow.

INDOOR AIRFLOW AND AIRFLOW ADJUSTMENTS

For cooling operation, the recommended airflow is 350 to 450 cfm for each 12,000 Btuh of rated cooling capacity. For heating operation, the airflow must produce a temperature rise that falls within the range stamped on the unit rating plate.

Table 4 shows the temperature rise at various airflow rates. Table 7 & 8 show cooling airflows and Table 9 & 10 show heating airflows at the selection pin ranges (depending on external static pressure). Refer to these tables to determine the airflow for the system being installed.

NOTE: Be sure that all supply- and return-air grilles are open, free from obstructions, and adjusted properly.

⚠ WARNING

ELECTRICAL SHOCK HAZARD

Failure to follow this warning could result in personal injury or death.

Before making any indoor wiring adjustments, shut off gas supply. Then disconnect electrical power to the unit.

Airflow can be changed by changing the selection pins on the Easy Select circuit board.

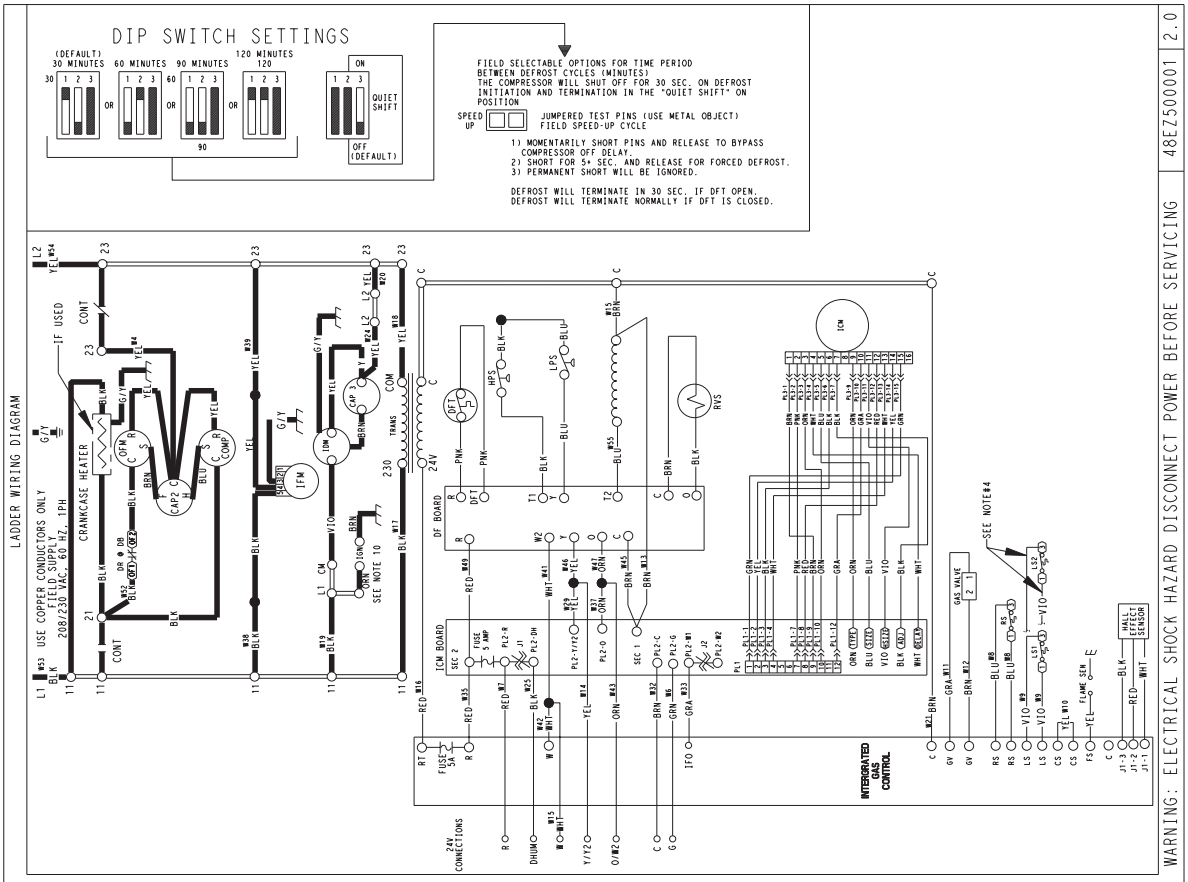

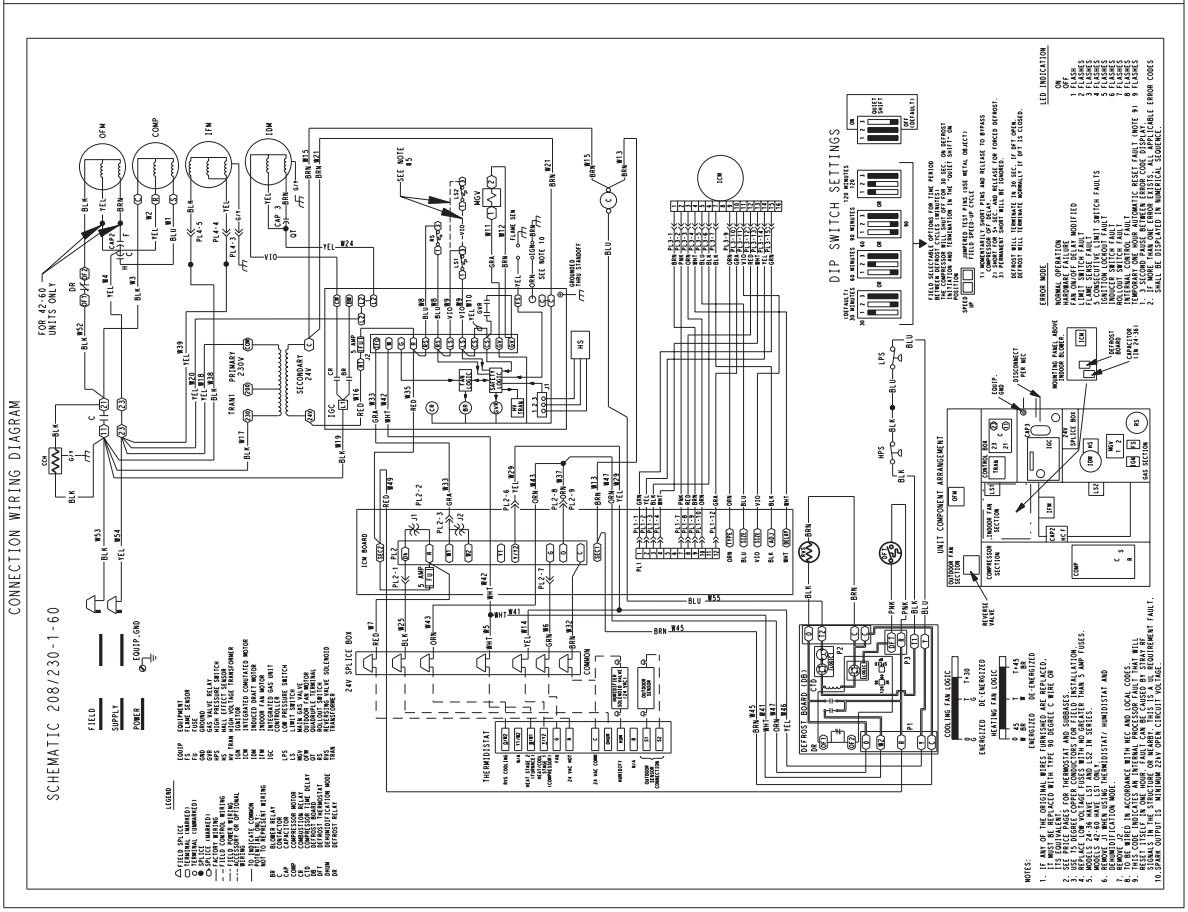

A07202

Fig. 18 - 208/230-1-60 Wiring Diagram, Unit 674D

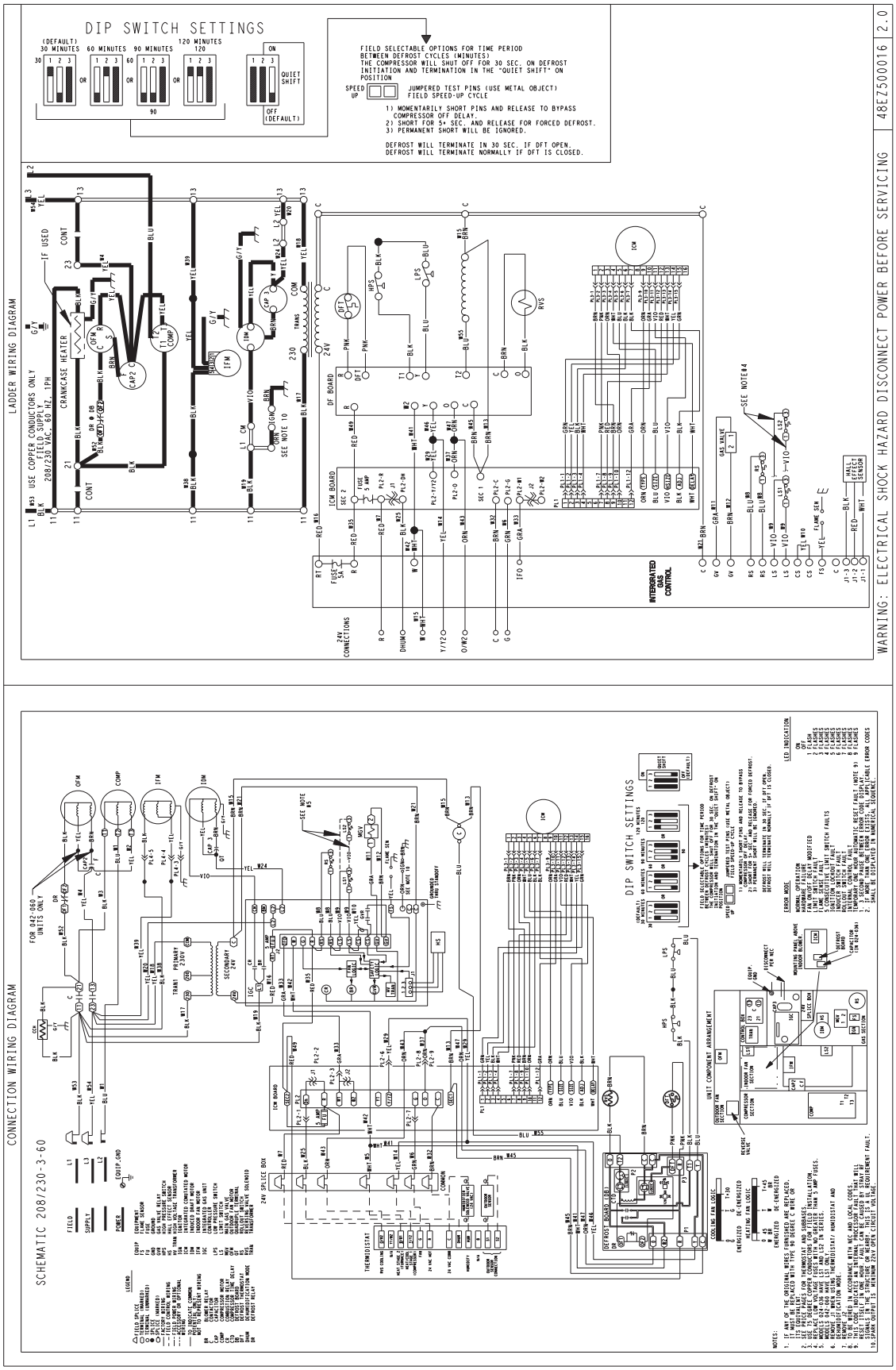

A07016

Fig. 19 - 208/230-3-60 Wiring Diagram, Unit 674D

Table 9 – 674D Gas Heating ECM Airflow Small Cabinet

EASY SELECT™ BOARD SETTING (CFM)		700			800			1100			1250		
Unit Size	External Static Pressure (in. wc) / Gas Heat Size	0.0–0.4	0.4–0.7	0.7–1.0	0.0–0.4	0.4–0.7	0.7–1.0	0.0–0.4	0.4–0.7	0.7–1.0	0.0–0.4	0.4–0.7	0.7–1.0
024	040	–	–	–	855	770	710	–	–	–	–	–	–
030	040	–	–	–	880	840	805	–	–	–	–	–	–
	060	–	–	–	–	–	–	1030	970	910	–	–	–
036	060	–	–	–	–	–	–	1035	995	955	–	–	–
	090	–	–	–	–	–	–	–	–	–	1170	1110	1025

Table 10 – 674D Gas Heating ECM Airflow Large Cabinet

EASY SELECT™ BOARD SETTING (CFM)		1000	1250	1600	1750	1800
Unit Size	External Static Pressure (in. wc) / Gas Heat Size	0.0–1.0	0.0–1.0	0.0–1.0	0.0–1.0	0.0–1.0
042	060	1000	–	–	–	–
	090	–	1250	–	–	–
048	090	–	1250	–	–	–
	115	–	–	1600	–	–
	130	–	–	–	1750	–
060	090	–	1250	–	–	–
	115	–	–	1600	–	–
	130	–	–	–	–	1800

Table 11 – ECM Wet Coil Pressure Drop (in. wc)

UNIT SIZE	STANDARD CFM (SCFM)															
	600	700	800	900	1000	1100	1200	1300	1400	1500	1600	1700	1800	1900	2000	2100
024	0.005	0.007	0.010	0.012	0.015	–	–	–	–	–	–	–	–	–	–	–
030	–	0.007	0.010	0.012	0.015	0.018	0.021	0.024	–	–	–	–	–	–	–	–
036	–	–	–	0.019	0.023	0.027	0.032	0.037	0.042	0.047	–	–	–	–	–	–
042	–	–	–	–	0.014	0.017	0.020	0.024	0.027	0.031	0.035	0.039	0.043	–	–	–
048	–	–	–	–	–	–	0.027	0.032	0.036	0.041	0.046	0.052	0.057	0.063	0.068	–
060	–	–	–	–	–	–	–	–	–	0.029	0.032	0.036	0.040	0.045	0.049	0.053

Required Subcooling oF (oC)					
Model Size	Outdoor Ambient Temperature				
	75 (24)	82 (28)	85 (29)	95 (35)	105 (41)
024	10.3 (5.7)	9.8 (5.4)	9.4 (5.2)	9 (5)	8.6 (4.7)
030	9.3 (5.2)	8.8 (4.9)	8.6 (4.8)	7.8 (4.3)	7 (3.9)
036	17.6 (9.8)	16.8 (9.3)	16.5 (9.2)	15.4 (8.6)	14.3 (7.9)
042	12.8 (7.1)	12.7 (7.1)	12.7 (7.1)	12.6 (7)	12.6 (7)
048	17.5 (9.7)	16.9 (9.4)	16.6 (9.2)	15.7 (8.7)	14.8 (8.2)
060	13.7 (7.6)	13 (7.2)	13 (7.2)	14.5 (8.1)	11.5 (6.4)

Charging Procedure

1- Measure Discharge line pressure by attaching a gauge to the service port.

2- Measure the Liquid line temperature by attaching a temperature sensing device to it.

3- Insulate the temperature sensing device so that the Outdoor Ambient doesn't affect the reading.

4- Refer to the required Subcooling in the table based on the model size and the Outdoor Ambient temperature.

5- Interpolate if the Outdoor ambient temperature lies in between the table values. Extrapolate if the temperature lies beyond the table range.

6- Find the Pressure Value in the table corresponding to the the measured Pressure of the Compressor Discharge line.

7- Read across from the Pressure reading to obtain the Liquid line temperature for a required Subcooling

8- Add Charge if the measured temperature is higher than the table value.

50XZ500174

Required Liquid Line Temperature for a Specific Subcooling (R-410A)											
	Required Subcooling (°F)							Required Subcooling (°C)			
Pressure (psig)	5	10	15	20	25	Pressure (kPa)	3	6	8	11	14
189	61	56	51	46	41	1303	16	13	11	8	5
196	63	58	53	48	43	1351	17	15	12	9	6
203	66	61	56	51	46	1399	19	16	13	10	8
210	68	63	58	53	48	1448	20	17	14	11	9
217	70	65	60	55	50	1496	21	18	15	13	10
224	72	67	62	57	52	1544	22	19	16	14	11
231	74	69	64	59	54	1593	23	20	18	15	12
238	76	71	66	61	56	1641	24	21	19	16	13
245	77	72	67	62	57	1689	25	22	20	17	14
252	79	74	69	64	59	1737	26	23	21	18	15
260	81	76	71	66	61	1792	27	25	22	19	16
268	83	78	73	68	63	1848	29	26	23	20	17
276	85	80	75	70	65	1903	30	27	24	21	19
284	87	82	77	72	67	1958	31	28	25	22	20
292	89	84	79	74	69	2013	32	29	26	23	21
300	91	86	81	76	71	2068	33	30	27	24	22
309	93	88	83	78	73	2130	34	31	28	26	23
318	95	90	85	80	75	2192	35	32	29	27	24
327	97	92	87	82	77	2254	36	33	31	28	25
336	99	94	89	84	79	2316	37	34	32	29	26
345	101	96	91	86	81	2378	38	35	33	30	27
354	103	98	93	88	83	2440	39	36	34	31	28
364	105	100	95	90	85	2509	40	38	35	32	29
374	107	102	97	92	87	2578	41	39	36	33	30
384	108	103	98	93	88	2647	42	40	37	34	31
394	110	105	100	95	90	2716	44	41	38	35	32
404	112	107	102	97	92	2785	45	42	39	36	33
414	114	109	104	99	94	2854	46	43	40	37	34
424	116	111	106	101	96	2923	47	44	41	38	35
434	118	113	108	103	98	2992	48	45	42	39	36
444	119	114	109	104	99	3061	48	46	43	40	37
454	121	116	111	106	101	3130	49	47	44	41	38
464	123	118	113	108	103	3199	50	48	45	42	39
474	124	119	114	109	104	3268	51	48	46	43	40
484	126	121	116	111	106	3337	52	49	47	44	41
494	127	122	117	112	107	3406	53	50	47	45	42
504	129	124	119	114	109	3475	54	51	48	46	43
514	131	126	121	116	111	3544	55	52	49	46	44
524	132	127	122	117	112	3612	56	53	50	47	45
534	134	129	124	119	114	3681	56	54	51	48	45

C03027

Fig. 20 - Cooling Charging Table-Subcooling

MAINTENANCE

To ensure continuing high performance and to minimize the possibility of premature equipment failure, periodic maintenance must be performed on this equipment. This combination heating/cooling unit should be inspected at least once each year by a qualified service person. To troubleshoot cooling or heating of units, refer to Tables 12, 13 and 14.

NOTE: Consult your local dealer about the availability of a maintenance contract.

⚠ WARNING

PERSONAL INJURY AND UNIT DAMAGE HAZARD

Failure to follow this warning could result in personal injury or death and unit component damage.

The ability to properly perform maintenance on this equipment requires certain expertise, mechanical skills, tools and equipment. If you do not possess these, do not attempt to perform any maintenance on this equipment, other than those procedures recommended in the Owner's Manual.

⚠ WARNING

ELECTRICAL SHOCK HAZARD

Failure to follow these warnings could result in personal injury or death:

1. Turn off electrical power to the unit before performing any maintenance or service on this unit.
2. Use extreme caution when removing panels and parts.
3. Never place anything combustible either on or in contact with the unit.
4. Should overheting occur or the gas supply fail to shut off, turn off external main manual gas valve to the unit. Then shut off electrical supply.

⚠ CAUTION

UNIT OPERATION HAZARD

Failure to follow this caution may result in improper operation.

Errors made when reconnecting wires may cause improper and dangerous operation. Label all wires prior to disconnecting when servicing.

The minimum maintenance requirements for this equipment are as follows:

1. Inspect air filter(s) each month. Clean or replace when necessary. Certain geographical locations may require more frequent inspections.
2. Inspect indoor coil, outdoor coil, drain pan, and condensate drain each cooling season for cleanliness. Clean when necessary.
3. Inspect blower motor and wheel for cleanliness at the beginning of each heating and cooling season. Clean when necessary. For first heating and cooling season, inspect blower wheel bi-monthly to determine proper cleaning frequency.
4. Check electrical connections for tightness and controls for proper operation each heating and cooling season. Service when necessary.
5. Check and inspect heating section before each heating season. Clean and adjust when necessary.
6. Check flue hood and remove any obstructions, if necessary.

AIR FILTER

NOTE: Never operate the unit without a suitable air filter in the return-air duct system. Always replace the filter with the same dimensional size and type as originally installed. (See Table 1 for recommended filter sizes.)

Inspect air filter(s) at least once each month and replace (throwaway-type) or clean (cleanable-type) at least twice during each heating and cooling season or whenever the filter(s) becomes clogged with dust and/or lint.

INDOOR BLOWER AND MOTOR

NOTE: All motors are prelubricated. Do not attempt to lubricate these motors.

For longer life, operating economy, and continuing efficiency, clean accumulated dirt and grease from the blower wheel and motor annually.

⚠ WARNING

ELECTRICAL SHOCK HAZARD

Failure to follow this warning could result in personal injury or death.

Disconnect and tag electrical power to the unit before cleaning and lubricating the blower motor and wheel.

CLEANING THE BLOWER MOTOR AND WHEEL

1. Remove and disassemble blower assembly as follows:
   a. Remove unit access panel.
   b. Disconnect motor lead from blower relay (BR). Disconnect yellow lead from terminal L2 of the contactor.
   c. On all units, remove blower assembly from unit. Remove screws securing blower to blower partition and slide assembly out. Be careful not to tear insulation in blower compartment.
   d. Ensure proper reassembly by marking blower wheel and motor in relation to blower housing before disassembly.
   e. Loosen setscrew(s) that secures wheel to motor shaft. Remove screws that secure motor mount brackets to housing, and slide motor and motor mount out of housing.
2. Remove and clean blower wheel as follows:
   a. Ensure proper reassembly by marking wheel orientation.
   b. Lift wheel from housing. When handling and/or cleaning blower wheel, be sure not to disturb balance weights (clips) on blower wheel vanes.
   c. Remove caked-on dirt from wheel and housing with a brush. Remove lint and/or dirt accumulations from wheel and housing with vacuum cleaner, using soft brush attachment. Remove grease and oil with mild solvent.
   d. Reassemble wheel into housing.
   e. Reassemble motor into housing. Be sure setscrews are tightened on motor shaft flats and not on round part of shaft.
   f. Reinstall unit access panel.
3. Restore electrical power to unit. Start unit and check for proper blower rotation and motor speeds during heating and cooling cycles.

FLUE GAS PASSAGEWAYS

To inspect the flue collector box and upper areas of the heat exchanger:

1. Remove the combustion blower wheel and motor assembly according to directions in the Combustion-Air Blower section.
2. Remove the 3 screws holding the blower housing to the flue collector box cover (See Fig. 23).
3. Remove the 12 screws holding the flue collector box cover (See Fig. 24) to the heat exchanger assembly. Inspect the heat exchangers.
4. Clean all surfaces, as required, using a wire brush.

COMBUSTION-AIR BLOWER

Clean periodically to assure proper airflow and heating efficiency. Inspect blower wheel every fall and periodically during the heating season. For the first heating season, inspect blower wheel bimonthly to determine proper cleaning frequency. To inspect blower wheel, remove draft hood assembly. Shine a flashlight into opening to inspect wheel. If cleaning is required, remove motor and wheel as follows:

1. Remove unit access panel (See Fig. 22).
2. Remove the 7 screws that attach induced-draft motor mounting plate to blower housing (See Fig. 23).
3. Slide the motor and blower wheel assembly out of the blower housing (See Fig. 23). Clean the blower wheel. If additional cleaning is required, continue with Steps 4 and 5.
4. To remove blower, remove 2 setscrews (See Fig. 23).
5. To remove motor and cooling fan assembly, remove 4 screws that hold blower housing to mounting plate.
6. To reinstall, reverse the procedure outlined above.

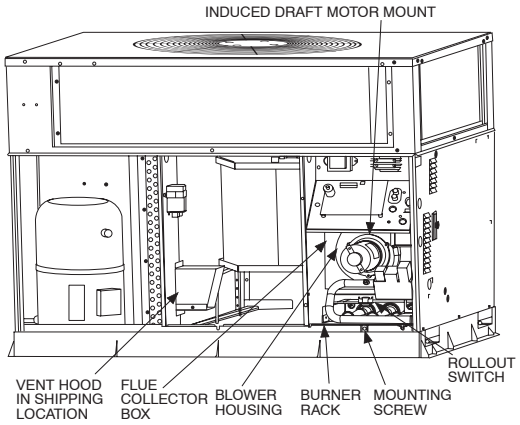

Fig. 21 - Blower Housing and Flue Collector Box

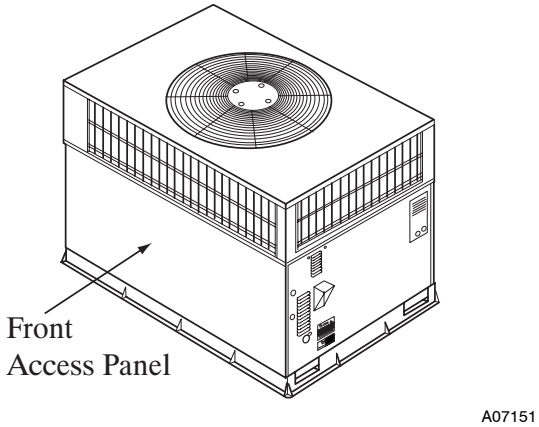

Fig. 22 - Unit Access Panel

LIMIT SWITCH

Remove unit access panel. Limit switch is located on the blower partition.

BURNER IGNITION

Unit is equipped with a direct spark ignition 100 percent lockout system. Ignition module is located in the control box. Module contains a self-diagnostic LED. During servicing, refer to label diagram for LED interpretation.

If lockout occurs, unit may be reset by either momentarily interrupting power supply to unit or by turning selector switch to OFF position at the thermostat.

MAIN BURNERS

At the beginning of each heating season, inspect for deterioration or blockage due to corrosion or other causes. Observe the main burner flames and adjust, if necessary.

⚠ WARNING

PERSONAL INJURY AND UNIT DAMAGE HAZARD

Failure to follow this warning could result in personal injury or death and unit component damage.

When servicing gas train, do not hit or plug orifice spuds.

REMOVAL OF GAS TRAIN

To remove the gas train for servicing:

1. Shut off main gas valve.
2. Shut off power to unit.
3. Remove unit access panel (See Fig. 22).
4. Disconnect gas piping at unit gas valve.
5. Remove wires connected to gas valve. Mark each wire.
6. Remove ignitor and sensor wires at the ignitor module.
7. Remove the mounting screw that attaches the burner rack to the unit base (See Fig. 24).
8. Slide the burner rack out of the unit (See Fig. 21 and 24).
9. To reinstall, reverse the procedure outlined above.

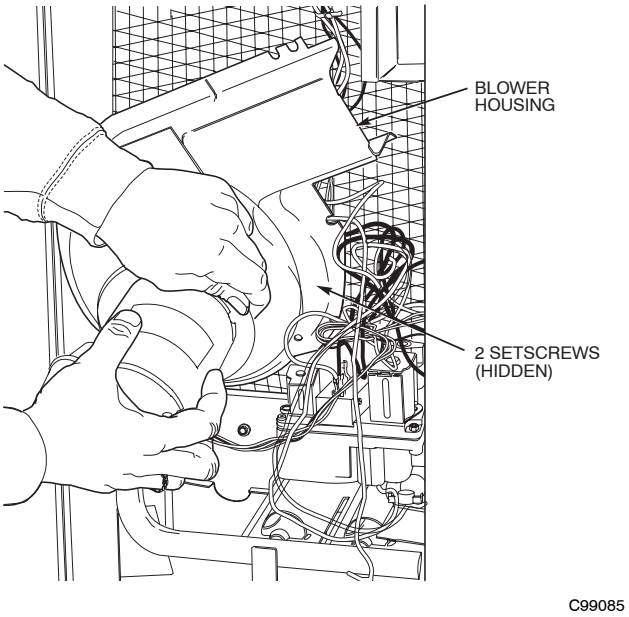

Fig. 23 - Removal of Motor and Blower Wheel

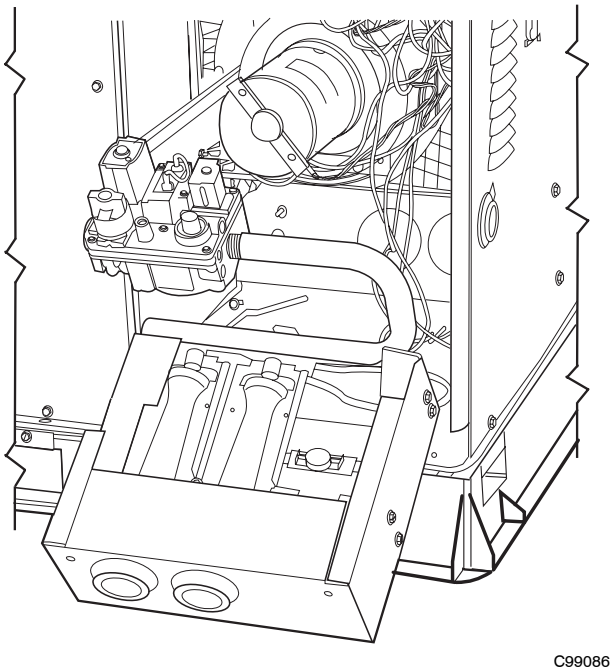

Fig. 24 - Burner Rack Removed

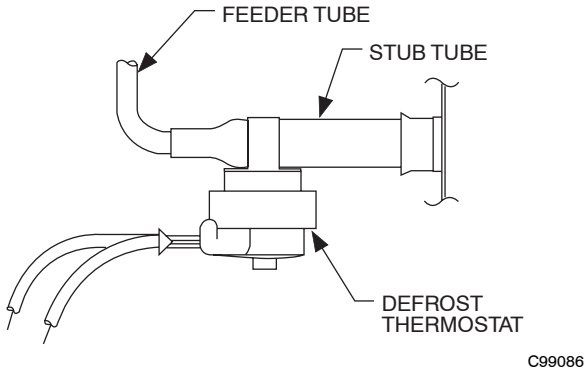

Fig. 25 - Burner Rack Removed

OUTDOOR COIL, INDOOR COIL, AND CONDENSATE DRAIN PAN

Inspect the outdoor coil, indoor coil, and condensate drain pan at least once each year. The coils are easily cleaned when dry; therefore, inspect and clean the coils either before or after each cooling season. Remove all obstructions, including weeds and shrubs, that interfere with the airflow through the condenser coil.

Straighten bent fins with a fin comb. If coated with dirt or lint, clean the coils with a vacuum cleaner, using the soft brush attachment. Be careful not to bend the fins. If coated with oil or grease, clean the coils with a mild detergent-and-water solution. Rinse coils with clear water, using a garden hose. Be careful not to splash water on motors, insulation, wiring, or air filter(s). For best results, spray outdoor coil fins from inside to outside the unit. On units with an outer and inner condenser coil, be sure to clean between the coils. Be sure to flush all dirt and debris from the unit base.

Inspect the drain pan and condensate drain line when inspecting the coils. Clean the drain pan and condensate drain by removing all foreign matter from the pan. Flush the pan and drain tube with clear water. Do not splash water on the insulation, motor, wiring, or air filter(s). If the drain tube is restricted, clear it with a "plumbers snake" or similar probe device. Ensure that the auxiliary drain port above the drain tube is also clear.

OUTDOOR FAN

⚠ CAUTION

UNIT OPERATION HAZARD

Failure to follow this caution may result in damage to unit components.

Keep the outdoor fan free from all obstructions to ensure proper cooling operation. Never place articles on top of the unit.

1. Remove 6 screws holding outdoor grille and motor to top cover.
2. Turn motor/grille assembly upside down on top cover to expose the fan blade.
3. Inspect the fan blades for cracks or bends.
4. If fan needs to be removed, loosen the setscrew and slide the fan off the motor shaft.
5. When replacing fan blade, position blade so the hub is 1/8 in. away from the motor end (1/8 in. (3 mm) of motor shaft will be visible, See Fig. 15).
6. Ensure that setscrew engages the flat area on the motor shaft when tightening.
7. Replace grille.

ELECTRICAL CONTROLS AND WIRING

Inspect and check the electrical controls and wiring annually. Be sure to turn off the gas supply, and then the electrical power to the unit.

Remove access panel to locate all the electrical controls and wiring. Check all electrical connections for tightness. Tighten all screw connections. If any smoky or burned connections are noticed, disassemble the connection, clean all the parts, re-strip the wire end and reassemble the connection properly and securely.

After inspecting the electrical controls and wiring, replace the access panel. Start the unit, and observe at least one complete heating cycle and one complete cooling cycle to ensure proper operation. If discrepancies are observed in either or both operating cycles, or if a suspected malfunction has occurred, check each electrical component with the proper electrical instrumentation. Refer to the unit wiring label when making these checkouts.

NOTE: Refer to the heating and/or cooling sequence of operation in this publication as an aid in determining proper control operation.

REFRIGERANT CIRCUIT

Annually inspect all refrigerant tubing connections and the unit base for oil accumulations. Detecting oil generally indicates a refrigerant leak.

⚠ WARNING

EXPLOSION, PERSONAL INJURY HAZARD

Failure to follow this warning could result in personal injury, death or property damage.

System under pressure. Relieve pressure and recover all refrigerant before system repair or final unit disposal. Use all service ports and open all flow-control devices, including solenoid valves.

If oil is detected or if low cooling performance is suspected, leak-test all refrigerant tubing using an electronic leak-detector, halide torch, or liquid-soap solution. If a refrigerant leak is detected, refer to the Check for Refrigerant Leaks section.

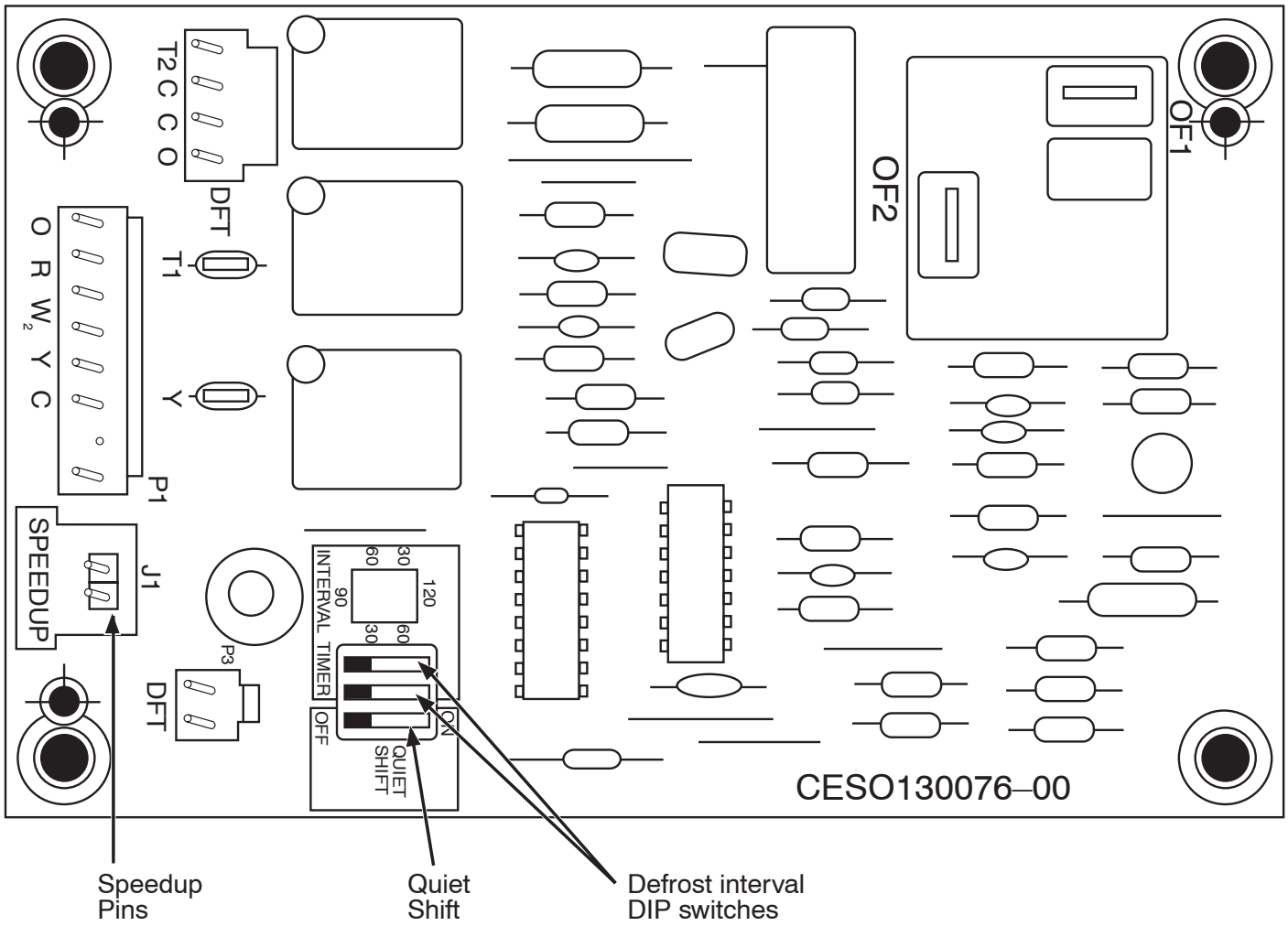

A99442

Fig. 26 - Defrost Control

If no refrigerant leaks are found and low cooling performance is suspected, refer to the Checking and Adjusting Refrigerant Charge section.

GAS INPUT

The gas input does not require checking unless improper heating performance is suspected. If a problem exists, refer to the Start-Up section.

INDOOR AIRFLOW

The heating and/or cooling airflow does not require checking unless improper performance is suspected. If a problem exists, be sure that all supply- and return-air grilles are open and free from obstructions, and that the air filter is clean. When necessary, refer to the Indoor Airflow and Airflow Adjustments section to check the system airflow.

CHECK DEFROST THERMOSTAT

There is a liquid header with a brass distributor and feeder tube going into outdoor coil. At the end of 1 of the feeder tubes, there is a 3/8-in. OD stub approximately 3 in. (76 mm) long. The defrost thermostat should be located on stub tube. Note that there is only 1 stub tube used with liquid header, and on most units it is the bottom circuit.

PURON ITEMS

METERING DEVICE (Thermostatic Expansion Valve & Accurater Piston)

This unit uses both a hard shutoff, balance port TXV in the indoor coil and an Accurater Piston in the outdoor coil. The TXV maintains a constant superheat at the indoor coil exit (cooling mode) resulting in higher overall system efficiency.

PRESSURE SWITCHES

Pressure switches are protective devices wired into control circuit (low voltage). They shut off compressor if abnormally high or low pressures are present in the refrigeration circuit. These pressure switches are specifically designed to operate with Puron (R-410A) systems. R-22 pressure switches must not be used as replacements for the Puron (R-410A) system.

LOSS OF CHARGE SWITCH

This switch is located on the liquid line and protects against low suction pressures caused by such events as loss of charge, low airflow across indoor coil, dirty filters, etc. It opens on a pressure drop at about 20 psig. If system pressure is above this, switch should be closed. To check switch:

1. Turn off all power to unit.
2. Disconnect leads on switch.
3. Apply ohm meter leads across switch. You should have continuity on a good switch.

NOTE: Because these switches are attached to refrigeration system under pressure, it is not advisable to remove this device for troubleshooting unless you are reasonably certain that a problem exists. If switch must be removed, remove and recover all system charge so that pressure gauges read 0 psi. Never open system without breaking vacuum with dry nitrogen.

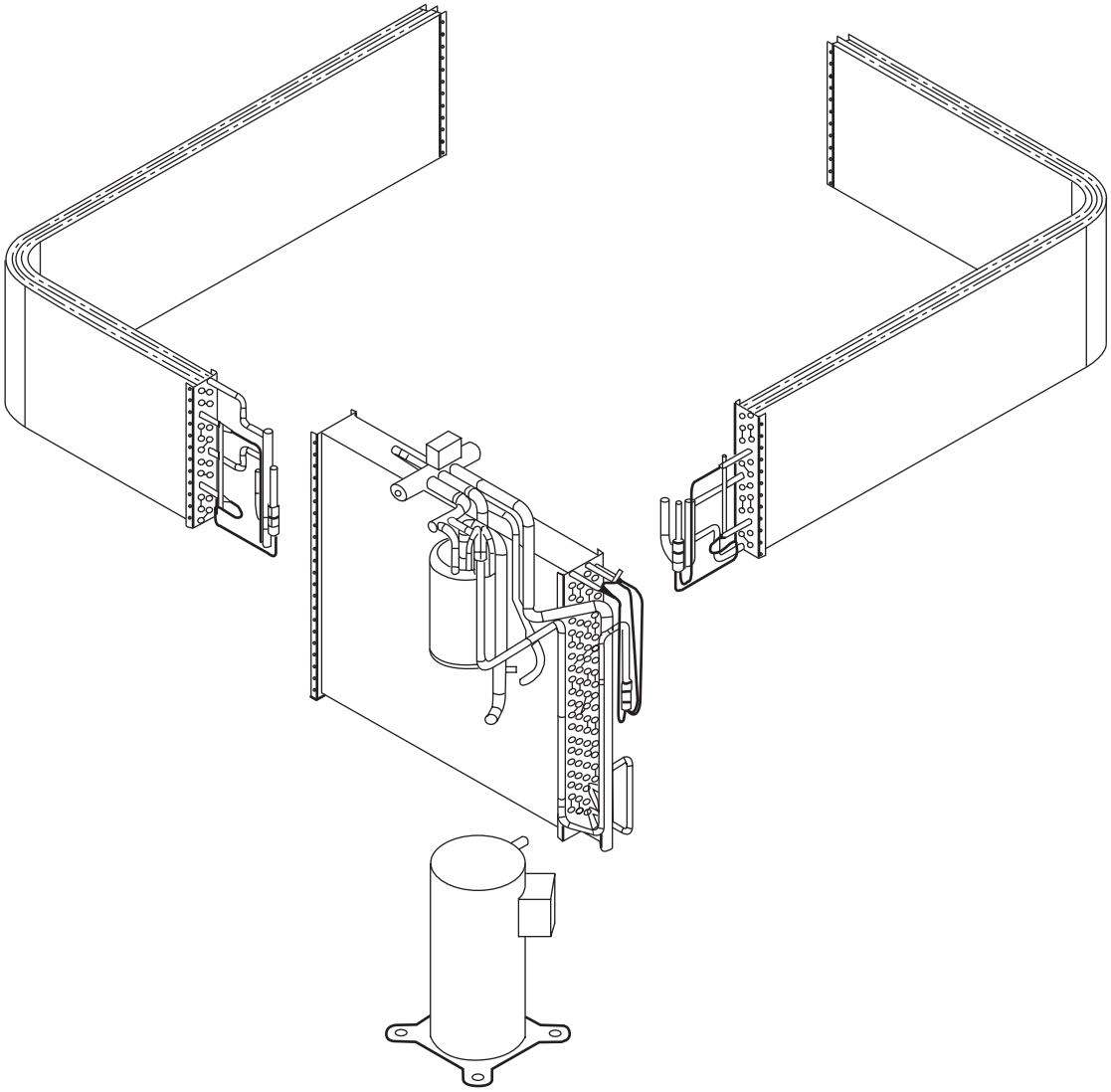

C99097

Fig. 27 - Refrigerant Circuit

HIGH-PRESSURE SWITCH

The high-pressure switch is located in the discharge line and protects against excessive condenser coil pressure. It opens at 610 psig.

High pressure may be caused by a dirty outdoor coil, failed fan motor, or outdoor air recirculation. To check switch:

1. Turn off all power to unit.
2. Disconnect leads on switch.
3. Apply ohm meter leads across switch. You should have continuity on a good switch.

COPELAND SCROLL COMPRESSOR (PURON REFRIGERANT)

The compressor used in this product is specifically designed to operate with Puron (R-410A) refrigerant and cannot be interchanged.

The compressor is an electrical (as well as mechanical) device. Exercise extreme caution when working near compressors. Power should be shut off, if possible, for most troubleshooting techniques. Refrigerants present additional safety hazards.

⚠ WARNING

EXPLOSION HAZARD

Failure to follow this warning could result in personal injury or death and/or property damage.

Wear safety glasses and gloves when handling refrigerants. Keep torches and other ignition sources away from refrigerants and oils.

The scroll compressor pumps refrigerant throughout the system by the interaction of a stationary and an orbiting scroll. The scroll compressor has no dynamic suction or discharge valves, and it is more tolerant of stresses caused by debris, liquid slugging, and flooded starts. The compressor is equipped with an anti-rotational device and an internal pressure relief port. The anti-rotational device prevents the scroll from turning backwards and replaces the need for a cycle protector. The pressure relief port is a safety device, designed to protect against extreme high pressure. The relief port has an operating range between 550 and 625 psi differential pressure.

The Copeland scroll compressor uses Mobil 3MAF POE oil. Copeland Ultra 22 CC should be used if additional oil is needed in the field. Mobil Arctic EAL22CC or ICI Emkarate RL22 or 32CF oil may be used to recharge these compressors if Ultra 22 is not available.

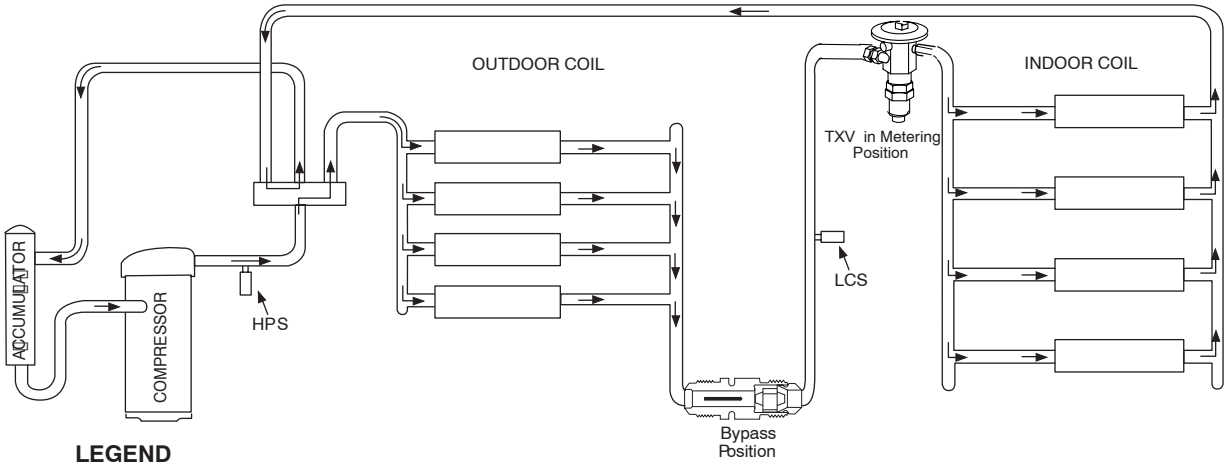

LEGEND

HPS – High Pressure Switch

LCS – Loss of Charge Switch

Accurater® Metering Device

Arrow indicates direction of flow

C03011

Fig. 28 - Typical Heat Pump Operation, Cooling Mode

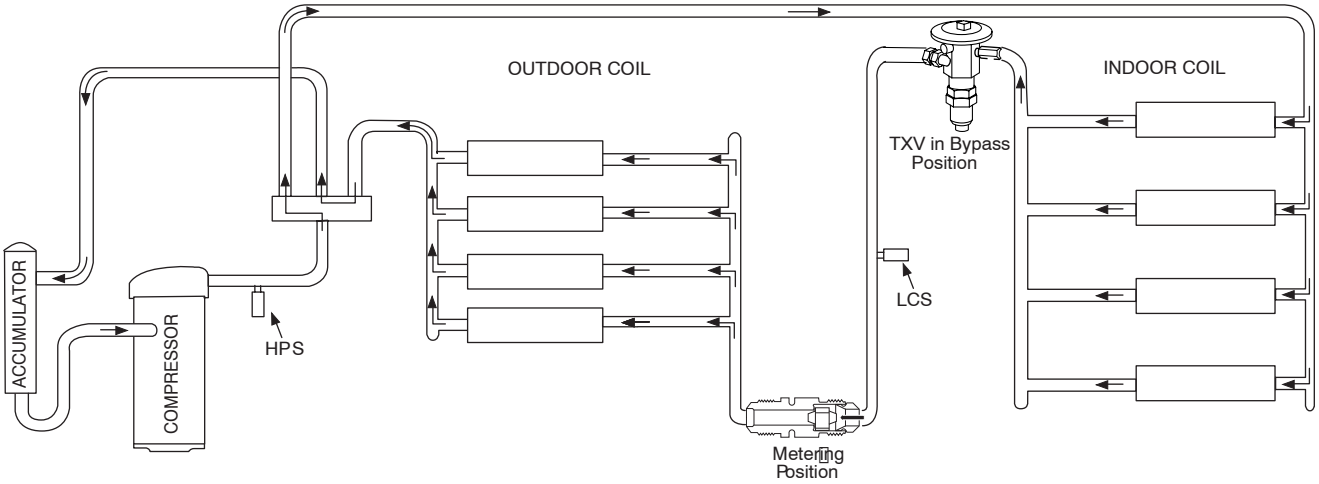

LEGEND

HPS – High Pressure Switch

LCS – Loss of Charge Switch

Accurater® Metering Device

Arrow indicates direction of flow

C03012

Fig. 29 - Typical Heat Pump Operation, Heating Mode

⚠ WARNING

UNIT OPERATION AND SAFETY HAZARD

Failure to follow this warning could result in personal injury or equipment damage.

This system uses Puron (R-410A) refrigerant which has higher operating pressures than R-22 and other refrigerants. No other refrigerant may be used in this system. Gauge set, hoses, and recovery system must be designed to handle Puron. If you are unsure, consult the equipment manufacturer.

REFRIGERANT SYSTEM

This information covers the refrigerant system of the 674D, including the compressor oil needed, servicing systems on roofs containing synthetic materials, the filter drier and refrigerant charging.

Compressor Oil

The compressor in this system uses a polyolester (POE) oil, Mobil 3MAF POE. This oil is extremely hygroscopic, meaning it absorbs water readily. POE oils can absorb 15 times as much water as other oils designed for HCFC and CFC refrigerants. Take all necessary precautions to avoid exposure of the oil to the atmosphere.

SERVICING SYSTEMS ON ROOFS WITH SYNTHETIC-MATERIALS

POE (polyolester) compressor lubricants are known to cause long term damage to some synthetic roofing materials.

Exposure, even if immediately cleaned up, may cause embrittlement (leading to cracking) to occur in one year or more. When performing any service that may risk exposure of compressor oil to the roof, take appropriate precautions to protect roofing. Procedures which risk oil leakage include, but are not limited to, compressor replacement, repairing refrigerant leaks, replacing refrigerant components such as filter drier, pressure switch, metering device, coil, accumulator, or reversing valve.

Synthetic Roof Precautionary Procedure

1. Cover extended roof working area with an impermeable polyethylene (plastic) drip cloth or tarp. Cover an approximate 10x10 ft (3x3 m) area.
2. Cover area in front of the unit service panel with a terry cloth shop towel to absorb lubricant spills and prevent run-offs, and protect drop cloth from tears caused by tools or components.
3. Place terry cloth shop towel inside unit immediately under component(s) to be serviced and prevent lubricant run-offs through the louvered openings in the unit base.
4. Perform required service.
5. Remove and dispose of any oil contaminated material per local codes.

LIQUID LINE FILTER DRIER

This filter drier is specifically designed to operate with Puron. Use only factory-authorized components. Filter drier must be replaced whenever the refrigerant system is opened. When removing a filter drier, use a tubing cutter to cut the drier from the system. Do not unsweat a filter drier from the system. Heat from unsweating will release moisture and contaminants from drier into system.

PURON (R-410A) REFRIGERANT CHARGING

Refer to unit information plate and charging chart. Some R-410A refrigerant cylinders contain a dip tube to allow liquid refrigerant to flow from cylinder in upright position. For cylinders equipped with a dip tube, charge Puron units with cylinder in upright position and a commercial metering device in manifold hose. Charge refrigerant into suction-line.

TROUBLESHOOTING

Use the Troubleshooting Guides (See Tables 12-14) if problems occur with these units.

START-UP CHECKLIST

Use Start-Up checklist to ensure proper start-up procedures are followed.

PURON® (R-410A) QUICK REFERENCE GUIDE

- Puron refrigerant operates at 50-70 percent higher pressures than R-22. Be sure that servicing equipment and replacement components are designed to operate with Puron
- Puron refrigerant cylinders are rose colored.
- Recovery cylinder service pressure rating must be 400 psig, DOT 4BA400 or DOT BW400.
- Puron systems should be charged with liquid refrigerant. Use a commercial type metering device in the manifold hose when charging into suction line with compressor operating
- Manifold sets should be 700 psig high side and 180 psig low side with 550 psig low-side retard.
- Use hoses with 700 psig service pressure rating.
- Leak detectors should be designed to detect HFC refrigerant.
- Puron, as with other HFCs, is only compatible with POE oils.
- Vacuum pumps will not remove moisture from oil.
- Do not use liquid-line filter driers with rated working pressures less than 600 psig.
- Do not leave Puron suction line filter driers in line longer than 72 hrs.
- Do not install a suction-line filter drier in liquid line.
- POE oils absorb moisture rapidly. Do not expose oil to atmosphere.
- POE oils may cause damage to certain plastics and roofing materials.
- Wrap all filter driers and service valves with wet cloth when brazing.
- A factory approved liquid-line filter drier is required on every unit.
- Do NOT use an R-22 TXV.
- If indoor unit is equipped with an R-22 TXV or piston metering device, it must be changed to a hard shutoff Puron TXV.
- Never open system to atmosphere while it is under a vacuum.
- When system must be opened for service, recover refrigerant, evacuate then break vacuum with dry nitrogen and replace filter driers. Evacuate to 500 microns prior to recharging.
- Do not vent Puron into the atmosphere.
- Do not use capillary tube coils.
- Observe all **warnings**, **cautions**, and **bold** text.
- All indoor coils must be installed with a hard shutoff Puron TXV metering device.

Table 12 – Troubleshooting Guide - Cooling or Heat Pump Heating Mode

SYMPTOM	CAUSE	REMEDY
Compressor and Outdoor fan will not start.	Power Failure	Call power company.
	Fuse blown or circuit breaker tripped	Replace fuse or reset circuit breaker.
	Defective thermostat, contactor, transformer, or control relay	Replace component.
	Insufficient line voltage	Determine cause and correct.
	Incorrect or faulty wiring	Check wiring diagram and rewire correctly.
	Thermostat setting too high	Lower thermostat setting below room temperature.
Compressor will not start but Outdoor fan runs.	Faulty wiring or loose connections in compressor circuit	Check wiring and repair or replace.
	Compressor motor burned out, seized, or internal over-load open	Determine cause Replace compressor.
	Defective run/start capacitor, overload, start relay	Determine cause and replace.
	One leg of 3–phase power dead	Replace fuse or reset circuit breaker. Determine cause.
Three–phase scroll compressor makes excessive noise, and there may be a low pressure differential.	Scroll compressor is rotating in the wrong direction	Correct the direction of rotation by reversing the 3–phase power leads to the unit. Shut down unit to allow pressures to equalize.
Compressor cycles (other than normally satisfying thermostat).	Refrigerant overcharge or undercharge	Recover refrigerant, evacuate system, and recharge to capacities shown on nameplate.
	Defective compressor	Replace and determine cause.
	Insufficient line voltage	Determine cause and correct.
	Blocked Outdoor	Determine cause and correct.
	Defective run/start capacitor, overload or start relay	Determine cause and replace.
	Defective thermostat	Replace thermostat.
	Faulty Outdoor–fan motor or capacitor	Replace.
	Damaged reversing valve	Determine cause and correct
	Restriction in refrigerant system	Locate restriction and remove.
Compressor operates continuously.	Dirty air filter	Replace filter.
	Unit undersized for load	Decrease load or increase unit size.
	Thermostat set too low	Reset thermostat.
	Low refrigerant charge	Locate leak, repair, and recharge.
	Leaking valves in compressor	Replace compressor.
	Air in system	Recover refrigerant, evacuate system, and recharge.
	Frosted coil with incorrect defrost operation	Check defrost time settings, Reset as necessary Check defrost temperature switch, Replace as nec-essary
	Outdoor coil dirty or restricted	Clean coil or remove restriction .
Excessive head pressure.	Dirty air filter	Replace filter.
	Dirty Indoor or Outdoor coil	Clean coil.
	Refrigerant overcharged	Recover excess refrigerant.
	Air in system	Recover refrigerant, evacuate system, and recharge.
	Indoor or Outdoor air restricted or air short–cycling	Determine cause and correct.
Head pressure too low.	Low refrigerant charge	Check for leaks, repair, and recharge.
	Compressor valves leaking	Replace compressor.
	Restriction in liquid tube	Remove restriction.
Excessive suction pressure.	High heat load	Check for source and eliminate.
	Compressor valves leaking	Replace compressor.
	Refrigerant overcharged	Recover excess refrigerant.
	Reversing valve hung up or leaking internally	Replace valve
Suction pressure too low.	Dirty air filter	Replace Filter.
	Low refrigerant charge	Check for leaks, repair, and recharge.
	Metering device or low side restricted	Remove source of restriction.
	Insufficient Indoor airflow	Increase air quantity. Check filter — replace if neces-sary.
	Temperature too low in conditioned area	Reset thermostat.
	Outdoor ambient below 55°F	Install low–ambient kit.
	Field–installed filter–drier restricted	Replace.
	(Heat) Outdoor coil frosted	Move timer on control board to 30 minutes between defrost cycles
Compressor runs but outdoor fan does not	NC (normally closed) contacts on defrost board open	Check condition of relay on board Replace if neces-sary

Table 13 – Troubleshooting Guide - Gas Heating

SYMPTOM	CAUSE	REMEDY
Burners will not ignite.	Water in gas line	Drain. Install drip leg.
	No power to furnace	Check power supply fuses, wiring, or circuit breaker.
	No 24–v power supply to control circuit	Check transformer. NOTE: Some transformers have internal over–current protection that requires a cool–down period to reset.
	Mis–wired or loose connections	Check all wiring and wire nut connections
	Burned–out heat anticipator in thermostat	Replace thermostat.
	Broken thermostat wire	Run continuity check. Replace wire if necessary.
	Misaligned spark electrodes	Check flame ignition and sense electrode positioning. Adjust as necessary.
	No gas at main burners	1.Check gas line for air. Purge as necessary. NOTE: After purging gas line of air, wait at least 5 minutes for any gas to dissipate before attempting to light unit. 2. Check gas valve.
Inadequate heating.	Dirty air filter	Clean or replace filter as necessary.
	Gas input to furnace too low	Check gas pressure at manifold match with that on unit nameplate.
	Unit undersized for application	Replace with proper unit or add additional unit.
	Restricted airflow	Clean or replace filter. Remove any restriction.
	Blower speed too low	Use faster speed tap if available, or install alternate motor.
	Limit switch cycles main burners	Check rotation of blower, thermostat heat anticipator settings, temperature rise of unit. Adjust as necessary.
Poor flame characteristics.	Incomplete combustion results in: Aldehyde odors, carbon monoxide, sooting flame, floating flame	1.Tighten all screws around burner compartment. 2. Cracked heat exchanger. Replace. 3. Unit over–fired. Reduce input (change orifices or adjust gas line or manifold pressure). 4. Check burner alignment.

674D

Table 14 – Troubleshooting Guide LED Error Codes

SYMPTOM	CAUSE	REMEDY
Hardware failure. (LED OFF)	Loss of power to control module (IGC)*.	Check 5-amp fuse on IGC*, power to unit, 24–v circuit breaker, and transformer. Units without a 24–v circuit breaker have an internal overload in the 24–v transformer. If the overload trips, allow 10 minutes for automatic reset.
Fan ON/OFF delay modified (LED/ FLASH)	High limit switch opens during heat exchanger warm-up period before fan-on delay expires. Limit switch opens within three minutes after blower-off delay timing in Heating mode.	Ensure unit is fired on rate; ensure temperature rise is correct. Ensure unit's external static pressure is within application guidelines.
Limit switch faults. (LED 2 flashes)	High temperature limit switch is open.	Check the operation of the indoor (Indoor) fan motor. Ensure that the supply-air temperature rise is in accordance with the range on the unit nameplate.
Flame sense fault. (LED 3 flashes)	The IGC* sensed flame that should not be present.	Reset unit. If problem persists, replace control board.
4 consecutive limit switch faults. (LED 4 flashes)	Inadequate airflow to unit	Check operation of indoor (Indoor) fan motor and that supply-air temperature rise agrees with range on unit nameplate information.
Ignition lockout. (LED 5 flashes)	Unit unsuccessfully attempted ignition for 15 minutes.	Check ignitor and flame sensor electrode spacing, gaps, etc. Ensure that flame sense and ignition wires are properly terminated. Verify that unit is obtaining proper amount of gas.
Induced-draft motor fault. (LED 6 flashes)	IGC does not sense that induced-draft motor is operating.*	Check for proper voltage. If motor is operating, check the speed sensor plug/IGC Terminal J2 connection. Proper connection: PIN 1— White PIN 2 — Red PIN 3 — Black
Rollout switch fault. (LED 7 flashes)	Rollout switch has opened.	Rollout switch will automatically reset, but IGC* will continue to lock-out unit. Check gas valve operation. Ensure that induced-draft blower wheel is properly secured to motor shaft. Reset unit at unit disconnect.
Rollout control fault. (LED 8 flashes)	Microprocessor has sensed an error in the software or hardware.	If error code is not cleared by resetting unit power, replace the IGC*.
Safety Critical fault. (LED 9 flashes)	If *Safety Critical Software Redundant Variables Mismatch* occurs then IGC will lockout (This fault will clear after 1 hour)	Verify that flame sensor wire and spark ignitor wires are not touch-ing or close together. Ensure unit has a good ground on the IGC board.

*__WARNING__ ⚠: If the IGC must be replaced, be sure to ground yourself to dissipate any electrical charge that my be present before handling new control board. The IGC is sensitive to static electricity and my be damaged if the necessary precautions are not taken.

IMPORTANT: Refer to Table 13-Troubleshooting Guide-Heating for additional troubleshooting analysis.

LEGEND

IGC—Integrated Gas Unit Controller

LED—Light-Emitting Diode

START-UP CHECKLIST
(Remove and Store in Job File)

I. Preliminary Information

MODEL NO.:_____

SERIAL NO.:_____

DATE:_____

TECHNICIAN:_____

II. PRE-START-UP (Insert checkmark in box as each item is completed)

( ) VERIFY THAT ALL PACKING MATERIALS HAVE BEEN REMOVED FROM UNIT

( ) REMOVE ALL SHIPPING HOLD DOWN BOLTS AND BRACKETS PER INSTALLATION INSTRUCTIONS

( ) CHECK ALL ELECTRICAL CONNECTIONS AND TERMINALS FOR TIGHTNESS

( ) CHECK GAS PIPING FOR LEAKS (WHERE APPLICABLE)

( ) CHECK THAT INDOOR (EVAPORATOR) AIR FILTER IS CLEAN AND IN PLACE

( ) VERIFY THAT UNIT INSTALLATION IS LEVEL

( ) CHECK FAN WHEEL, AND PROPELLER FOR LOCATION IN HOUSING/ORIFICE AND SETSCREW TIGHTNESS

( ) MAKE SURE THAT - (If Applicable) ON 060 SIZE PURON HEATPUMP ONLY, THE TWO WIRE TIES FASTEN TO THE OUTDOOR COILS AND REVERSING VALVE/ACCUMULATOR HAVE BEEN REMOVED

III. START-UP

ELECTRICAL

SUPPLY VOLTAGE _____

COMPRESSOR AMPS_____

INDOOR (EVAPORATOR) FAN AMPS_____

TEMPERATURES

OUTDOOR (CONDENSER) AIR TEMPERATURE _____DB

RETURN-AIR TEMPERATURE _____DB _____WB

COOLING SUPPLY AIR _____DB _____WB

HEAT PUMP SUPPLY AIR _____

GAS HEAT SUPPLY AIR _____

ELECTRIC HEAT SUPPLY AIR _____

PRESSURES

GAS INLET PRESSURE _____IN. WG

GAS MANIFOLD PRESSURE _____IN. WG

REFRIGERANT SUCTION _____PSIG SUCTION LINE TEMP*_____

REFRIGERANT DISCHARGE _____PSIG DISCHARGE TEMP†_____

( ) VERIFY REFRIGERANT CHARGE USING CHARGING CHARTS

GAS HEAT TEMPERATURE RISE

TEMPERATURE RISE (See Literature) RANGE_____

MEASURED TEMPERATURE RISE_____

*Measured at suction inlet to compressor

†Measured at liquid line leaving condenser.

IV. EASY SELECT SETTINGS

FULL UNIT MODEL NUMBER:_____

ENTER AVAILABLE HEATSETTINGS

ENTER AVAILABLE AIRFLOW HEAT AIR PIN CONNECTION SETTING_____

ENTER AVAILABLE SIZES SIZE PIN CONNECTION SETTING_____

TYPE PIN CONNECTION SETTING_____

ADJUST PIN CONNECTION SETTING_____

DELAY PIN CONNECTION SETTING_____

(0/0 or 0/90 for gas/electric models)

CONTINOUS FAN PIN CONNECTION SETTING_____

EASY SELECT			
Heat Settings			
AC HP Size			
System Type			
AC	HP-Comfort	HP.Eff	
AC/HP CFM Adjust			
Norm	Lo	Hi	
On/Off Delay			
0/90	30/90	0/0	ENH
Continous Fan			
Lo	Med	Hi	

C01999

674D

©2007 Bryant Heating & Cooling Systems 7310 W. Morris St. Indianapolis, IN 46231 Printed in U.S.A. Edition Date: 03/07 **Catalog No. II674D−24−1**

Manufacturer reserves the right to discontinue, or change at any time, specifications or designs without notice and without incurring obligations.

Replaces: NEW