**987MA**
**MODULATING 4-WAY MULTIPOISE**
**CONDENSING GAS FURNACE**
**SERIES B**

bryant®

# Installation, Start-up, Operating and Service and Maintenance Instructions

**NOTE**: Read the entire instruction manual before starting the installation.


SAFETY CONSIDERATIONS . . . . . 3
INTRODUCTION . . . . . 3
CODES AND STANDARDS . . . . . 4
ELECTROSTATIC DISCHARGE (ESD) PRECAUTIONS . . . 4
ACCESSORIES . . . . . 4
LOCATION . . . . . 5
AIR FOR COMBUSTION AND VENTILATION . . . . . 9
CONDENSATE TRAP . . . . . 11
Upflow . . . . . 11
Downflow . . . . . 11
Horizontal . . . . . 11
CONDENSATE DRAIN . . . . . 15
INSTALLATION . . . . . 18
Upflow . . . . . 18
Downflow . . . . . 18
Horizontal . . . . . 19
Filter Arrangement . . . . . 19
AIR DUCTS . . . . . 28
Ductwork Acoustical Treatment . . . . . 28
GAS PIPING . . . . . 32
ELECTRICAL CONNECTIONS . . . . . 33
115-V Wiring . . . . . 33
J-Box Installation . . . . . 34
24-V Wiring . . . . . 34
Accessories . . . . . 34
Alternate Power Supplies . . . . . 35
VENTING . . . . . 40
Special Venting Requirements for Installations in Canada . 40
Materials . . . . . 41
Venting Systems . . . . . 41
Locating Vent Termination . . . . . 42
Size the Vent and Combustion Air Pipes . . . . . 42
Combustion Air and Vent Piping Insulation Guidelines . . . 43
Configure the Furnace . . . . . 44
Installing the Vent Termination . . . . . 46
Venting System Length Calculations . . . . . 50
START-UP, ADJUSTMENT, AND SAFETY CHECK . . . . . 64
Select Setup Switch Positions . . . . . 64
Prime Condensate Trap . . . . . 64
Purge Gas Lines . . . . . 65
Adjustments . . . . . 66
Check Safety Controls . . . . . 69
Checklist . . . . . 69
SERVICE AND MAINTENANCE PROCEDURES . . . . . 79
Cleaning Heat Exchangers . . . . . 85
SEQUENCE OF OPERATION . . . . . 92
PARTS REPLACEMENT GUIDE . . . . . 97


## TABLE


Loose Parts Bag Contents . . . . . 6
Minimum Clearances to Combustible Materials . . . . . 6
Minimum Free Area Required . . . . . 10
Minimum Space Volumes . . . . . 10
Filter Size Information . . . . . 22
Opening Dimensions . . . . . 24
Air Delivery CFM . . . . . 29
Maximum Capacity of Pipe . . . . . 33
Electrical Data . . . . . 35
Vent Termination Kit for Direct Vent (2-Pipe) Systems . . . . . 42
Combustion-Air Vent Pipe, Fitting & Cement Material.. . . . . 47
Maximum Allowable Exposed Vent Lengths Insulation . . . . . 48
Maximum Equivalent Vent Length . . . . . 49
Deductions from Maximum Equivalent Vent Length . . . . . 49
Altitude Derate Multiplier for U.S.A. . . . . 74
Blower Off Delay Setup Switch . . . . . 74
Gas Rate . . . . . 74
Orifice Size and Manifold Pressure . . . . . 75


DESIGN CERTIFIED®

CERTIFIED®

Always Ask For FACTORY AUTHORIZED PARTS

AHRI CERTIFIED™ www.ahridirectory.org

Use of the AHRI Certified ™ Mark indicates a manufacturer's participation in the program. For verification of certification for individual products, go to www.ahridirectory.org.

Certified System™ ISO 9001 QMI-SAI Global


Portions of the text and tables are reprinted from NFPA 54/ANSI Z223.1-2009©, with permission of National Fire Protection Association, Quincy, MA 02269 and American Gas Association, Washington DC 20001. This reprinted material is not the complete and official position of the NFPA or ANSI on the referenced subject, which is represented only by the standard in its entirety.

## Required Notice for Massachusetts Installations

### IMPORTANT

The Commonwealth of Massachusetts requires compliance with regulation 248 CMR as follows:

5.08: Modifications to NFPA-54, Chapter 10

2) Revise 10.8.3 by adding the following additional requirements:

a. For all side wall horizontally vented gas fueled equipment installed in every dwelling, building or structure used in whole or in part for residential purposes, including those owned or operated by the Commonwealth and where the side wall exhaust vent termination is less than seven (7) feet above finished grade in the area of the venting, including but not limited to decks and porches, the following requirements shall be satisfied:

1. INSTALLATION OF CARBON MONOXIDE DETECTORS. At the time of installation of the side wall horizontal vented gas fueled equipment, the installing plumber or gasfitter shall observe that a hard wired carbon monoxide detector with an alarm and battery back-up is installed on the floor level where the gas equipment is to be installed. In addition, the installing plumber or gasfitter shall observe that a battery operated or hard wired carbon monoxide detector with an alarm is installed on each additional level of the dwelling, building or structure served by the side wall horizontal vented gas fueled equipment. It shall be the responsibility of the property owner to secure the services of qualified licensed professionals for the installation of hard wired carbon monoxide detectors

   a. In the event that the side wall horizontally vented gas fueled equipment is installed in a crawl space or an attic, the hard wired carbon monoxide detector with alarm and battery back-up may be installed on the next adjacent floor level.

   b. In the event that the requirements of this subdivision can not be met at the time of completion of installation, the owner shall have a period of thirty (30) days to comply with the above requirements; provided, however, that during said thirty (30) day period, a battery operated carbon monoxide detector with an alarm shall be installed.

2. APPROVED CARBON MONOXIDE DETECTORS. Each carbon monoxide detector as required in accordance with the above provisions shall comply with NFPA 720 and be ANSI/UL 2034 listed and IAS certified.

3. SIGNAGE. A metal or plastic identification plate shall be permanently mounted to the exterior of the building at a minimum height of eight (8) feet above grade directly in line with the exhaust vent terminal for the horizontally vented gas fueled heating appliance or equipment. The sign shall read, in print size no less than one-half (1/2) inch in size, "GAS VENT DIRECTLY BELOW. KEEP CLEAR OF ALL OBSTRUCTIONS".

4. INSPECTION. The state or local gas inspector of the side wall horizontally vented gas fueled equipment shall not approve the installation unless, upon inspection, the inspector observes carbon monoxide detectors and signage installed in accordance with the provisions of 248 CMR 5.08(2)(a)1 through 4.

5. EXEMPTIONS: The following equipment is exempt from 248 CMR 5.08(2)(a)1 through 4:

   (1.) The equipment listed in Chapter 10 entitled "Equipment Not Required To Be Vented" in the most current edition of NFPA 54 as adopted by the Board; and

   (2.) Product Approved side wall horizontally vented gas fueled equipment installed in a room or structure separate from the dwelling, building or structure used in whole or in part for residential purposes.

c. MANUFACTURER REQUIREMENTS - GAS EQUIPMENT VENTING SYSTEM PROVIDED. When the manufacturer of Product Approved side wall horizontally vented gas equipment provides a venting system design or venting system components with the equipment, the instructions provided by the manufacturer for installation of the equipment and the venting system shall include:

1. Detailed instructions for the installation of the venting system design or the venting system components; and
2. A complete parts list for the venting system design or venting system.

d. MANUFACTURER REQUIREMENTS - GAS EQUIPMENT VENTING SYSTEM NOT PROVIDED. When the manufacturer of a Product Approved side wall horizontally vented gas fueled equipment does not provide the parts for venting the flue gases, but identifies "special venting systems", the following requirements shall be satisfied by the manufacturer:

1. The referenced "special venting system" instructions shall be included with the appliance or equipment installation instructions; and
2. The "special venting systems" shall be Product Approved by the Board, and the instructions for that system shall include a parts list and detailed installation instructions.

e. A copy of all installation instructions for all Product Approved side wall horizontally vented gas fueled equipment, all venting instructions, all parts lists for venting instructions, and/or all venting design instructions shall remain with the appliance or equipment at the completion of the installation.

For questions regarding these requirements, please contact the Commonwealth of Massachusetts Board of State Examiners of Plumbers and Gas Fitters, 239 Causeway Street, Boston, MA 02114. 617-727-9952.

## SAFETY CONSIDERATIONS

**⚠ WARNING**

**FIRE, EXPLOSION, ELECTRICAL SHOCK, AND CARBON MONOXIDE POISONING HAZARD**

Failure to follow this warning could result in dangerous operation, personal injury, death, or property damage.

Improper installation, adjustment, alteration, service, maintenance, or use can cause carbon monoxide poisoning, explosion, fire, electrical shock, or other conditions which may cause personal injury or property damage. Consult a qualified service agency, local gas supplier, or your distributor or branch for information or assistance. The qualified service agency must use only factory-authorized and listed kits or accessories when modifying this product.

**⚠ WARNING**

**FIRE HAZARD**

Failure to follow this warning could result in personal injury, death, or property damage.

Solvents, cements and primers are combustible. Keep away from heat, sparks and open flame. Use only in well-ventilated areas. Avoid breathing in vapor or allowing contact with skin or eyes.

**⚠ CAUTION**

**FURNACE RELIABILITY HAZARD**

Failure to follow this caution may result in unit component damage.

Application of this furnace should be indoors with special attention given to vent sizing and material, gas input rate, air temperature rise, unit leveling, and unit sizing.

Improper installation, adjustment, alteration, service, maintenance, or use can cause explosion, fire, electrical shock, or other conditions which may cause death, personal injury, or property damage. Consult a qualified installer, service agency, or your distributor or branch for information or assistance. The qualified installer or agency must use factory-authorized kits or accessories when modifying this product. Refer to the individual instructions packaged with the kits or accessories when installing.

Installing and servicing heating equipment can be hazardous due to gas and electrical components. **Only trained and qualified personnel should install, repair, or service heating equipment.** Untrained personnel can perform basic maintenance functions such as cleaning and replacing air filters. All other operations must be performed by trained service personnel. When working on heating equipment, observe precautions in literature, on tags, and on labels attached to or shipped with furnace and other safety precautions that may apply.

These instructions cover minimum requirements and conform to existing national standards and safety codes. In some instances, these instructions exceed certain local codes and ordinances, especially those that may not have kept up with changing residential construction practices. We require these instructions as a minimum for a safe installation.

Follow all safety codes. Wear safety glasses, protective clothing, and work gloves. Have a fire extinguisher available. Read these instructions thoroughly and follow all warnings or cautions included in literature and attached to the unit.

**⚠ CAUTION**

**CUT HAZARD**

Failure to follow this caution may result in personal injury.

Sheet metal parts may have sharp edges or burrs. Use care and wear appropriate protective clothing, safety glasses and gloves when handling parts, and servicing furnaces.

This is the safety-alert symbol ⚠. When you see this symbol on the furnace and in instructions or manuals, be alert to the potential for personal injury.

Understand the signal words **DANGER**, **WARNING**, and **CAUTION**. These words are used with the safety-alert symbol. **DANGER** identifies the most serious hazards which **will** result in severe personal injury or death. **WARNING** signifies a hazard which **could** result in personal injury or death. **CAUTION** is used to identify hazards which **may** result in minor personal injury or product and property damage. **NOTE** and **NOTICE** are used to highlight suggestions which will result in enhanced installation, reliability, or operation.

1. Use only with type of gas approved for this furnace. Refer to the furnace rating plate.
2. Install this furnace only in a location and position as specified in the “Location” section of these instructions.
3. Provide adequate combustion and ventilation air to the furnace space as specified in “Air for Combustion and Ventilation” section.
4. Combustion products must be discharged outdoors. Connect this furnace to an approved vent system only, as specified in the “Venting” section of these instructions.
5. Never test for gas leaks with an open flame. Use a commercially available soap solution made specifically for the detection of leaks to check all connections, as specified in the “Gas Piping” section.
6. Always install furnace to operate within the furnace’s intended temperature-rise range with a duct system which has an external static pressure within the allowable range, as specified in the “Start-Up, Adjustments, and Safety Check” section. See furnace rating plate.
7. When a furnace is installed so that supply ducts carry air circulated by the furnace to areas outside the space containing the furnace, the return air shall also be handled by duct(s) sealed to the furnace casing and terminating outside the space containing the furnace. See “Air Ducts” section.
8. A gas-fired furnace for installation in a residential garage must be installed as specified in the warning box in the “Location” section.
9. The furnace may be used for construction heat provided that the furnace installation and operation complies with the first **CAUTION** in the **LOCATION** section of these instructions.
10. These Multipoise Gas-Fired Furnaces are CSA design-certified for use with natural and propane gases (see furnace rating plate) and for installation in alcoves, attics, basements, closets, utility rooms, crawlspaces, and garages. The furnace is factory-shipped for use with natural gas. A CSA (A.G.A. and C.G.A.) listed accessory gas conversion kit is required to convert furnace for use with propane gas.
11. See Table 2 for required clearances to combustible construction.
12. Maintain a 1-in. (25 mm) clearance from combustible materials to supply air ductwork for a distance of 36 in. (914 mm) horizontally from the furnace. See NFPA 90B or local code for further requirements.

13. These furnaces SHALL NOT be installed directly on carpeting, combustible tile, or any other combustible material other than wood flooring. In downflow installations, factory accessory floor base MUST be used when installed on combustible materials and wood flooring. Special base is not required when this furnace is installed on manufacturer's Coil Assembly Part No. CNRV, CNPV, CAP, or CAR or when Coil Box Part No. KCAKC is used. See Table 2 for clearance to combustible construction information.

# INTRODUCTION

The 4-way multipoise Category IV condensing furnace is CSA design-certified for both direct-vent (2-pipe) and ventilated combustion air venting installations. See Fig. 2. The furnace is factory-shipped for use with natural gas. The furnace can be converted in the field for use with propane gas when a factory-supplied conversion kit is used. Refer to the furnace rating plate for conversion kit information.

This furnace is not approved for installation in mobile homes, recreational vehicles, or outdoors.

This furnace is designed for minimum continuous return-air temperature of 60°F (15°C) db or intermittent operation down to 55°F (13°C) db such as when used with a night setback thermostat. Return-air temperature must not exceed 80°F (27°C) db. Failure to follow these return-air temperature limits may affect reliability of heat exchangers, motors, and controls. See Fig. 3.

The furnace should be sized to provide 100 percent of the design heating load requirement plus any margin that occurs because of furnace model size capacity increments. Heating load estimates can be made using approved methods available from Air Conditioning Contractors of America (Manual J); American Society of Heating, Refrigerating, and Air-Conditioning Engineers; or other approved engineering methods. Excessive oversizing of the furnace could cause the furnace and/or vent to fail prematurely.

For accessory installation details, refer to the applicable instruction literature.

**NOTE**: Remove all shipping materials, loose parts bag, and literature before operating the furnace. See Table 1.

# CODES AND STANDARDS

**Follow all national and local codes and standards in addition to these instructions.** The installation must comply with regulations of the serving gas supplier, local building, heating, plumbing, and other codes. In absence of local codes, the installation must comply with the national codes listed below and all authorities having jurisdiction.

In the United States and Canada, follow all codes and standards for the following:

## Safety

- US: National Fuel Gas Code (NFGC) NFPA 54-2009/ANSI Z223.1-2009 and the Installation Standards, Warm Air Heating and Air Conditioning Systems ANSI/NFPA 90B
- CANADA: National Standard of Canada, Natural Gas and Propane Installation Code (NSCNGPIC) CAN/CSA B149.1-2010

## General Installation

- US: NFGC and the NFPA 90B. For copies, contact the National Fire Protection Association Inc., Batterymarch Park, Quincy, MA 02269; or for only the NFGC contact the American Gas Association, 400 N. Capitol, N.W., Washington DC 20001
- CANADA: NSCNGPIC. For a copy, contact Standard Sales, CSA International, 178 Rexdale Boulevard, Etobicoke (Toronto), Ontario, M9W 1R3, Canada

## Combustion and Ventilation Air

- US: Section 9.3 of the NFPA54/ANSI Z223.1-2009 Air for Combustion and Ventilation
- CANADA: Part 8 of the CAN/CSA B149.1-2010, Venting Systems and Air Supply for Appliances

## Duct Systems

- US and CANADA: Air Conditioning Contractors Association (ACCA) Manual D, Sheet Metal and Air Conditioning Contractors National Association (SMACNA), or American Society of Heating, Refrigeration, and Air Conditioning Engineers (ASHRAE) 2005 Fundamentals Handbook Chapter 35

## Acoustical Lining and Fibrous Glass Duct

- US and CANADA: current edition of SMACNA, NFPA 90B as tested by UL Standard 181 for Class I Rigid Air Ducts

## Gas Piping and Gas Pipe Pressure Testing

- US: NFPA 54/ANSI Z223.1-2009 NFGC; Chapters 5, 6, 7, and 8 and national plumbing codes.
  CANADA: CAN/CSA-B149.1-2010, Parts 4, 5, 6, and 9.

In the state of Massachusetts:

- This product must be installed by a licensed plumber or gas fitter.
- When flexible connectors are used, the maximum length shall not exceed 36 in. (914 mm).
- When lever type gas shutoffs are used they shall be T-handle type.
- The use of copper tubing for gas piping is not approved by the state of Massachusetts.

## Electrical Connections

- US: National Electrical Code (NEC) ANSI/NFPA 70-2011
- CANADA: Canadian Electrical Code CSA C22.1

# ELECTROSTATIC DISCHARGE (ESD) PRECAUTIONS PROCEDURE

**⚠ CAUTION**

**FURNACE RELIABILITY HAZARD**

Failure to follow this caution may result in unit component damage.

Electrostatic discharge can affect electronic components. Take precautions during furnace installation and servicing to protect the furnace electronic control. Precautions will prevent electrostatic discharges from personnel and hand tools which are held during the procedure. These precautions will help to avoid exposing the control to electrostatic discharge by putting the furnace, the control, and the person at the same electrostatic potential.

1. Disconnect all power to the furnace. Multiple disconnects may be required. **DO NOT TOUCH THE CONTROL OR ANY WIRE CONNECTED TO THE CONTROL PRIOR TO DISCHARGING YOUR BODY'S ELECTROSTATIC CHARGE TO GROUND.**
2. Firmly touch the clean, unpainted, metal surface of the furnace chassis which is close to the control. Tools held in a person's hand during grounding will be satisfactorily discharged.
3. After touching the chassis, you may proceed to service the control or connecting wires as long as you do nothing to recharge your body with static electricity (for example; **DO NOT** move or shuffle your feet, do not touch ungrounded objects, etc.).
4. If you touch ungrounded objects (and recharge your body with static electricity), firmly touch a clean, unpainted metal

surface of the furnace again before touching control or wires.

5. Use this procedure for installed and uninstalled (ungrounded) furnaces.
6. Before removing a new control from its container, discharge your body's electrostatic charge to ground to protect the control from damage. If the control is to be installed in a furnace, follow items 1 through 4 before bringing the control or yourself in contact with the furnace. Put all used and new controls into containers before touching ungrounded objects.
7. An ESD service kit (available from commercial sources) may also be used to prevent ESD damage.

## ACCESSORIES

See Product Data Sheet for a list of accessories for this product.

## LOCATION

**⚠ CAUTION**

**PERSONAL INJURY AND/OR PROPERTY DAMAGE HAZARD**

Improper use or installation of this furnace may result in premature furnace component failure. This gas furnace may be used for heating buildings under construction provided that:

-The furnace is permanently installed with all electrical wiring, piping, venting and ducting installed according to these installation instructions. A return air duct is provided, sealed to the furnace casing, and terminated outside the space containing the furnace. This prevents a negative pressure condition as created by the circulating air blower, causing a flame rollout and/or drawing combustion products into the structure.

-The furnace is controlled by a thermostat. It may not be "hot wired" to provide heat continuously to the structure without thermostatic control.

-Clean outside air is provided for combustion. This is to minimize the corrosive effects of adhesives, sealers and other construction materials. It also prevents the entrainment of drywall dust into combustion air, which can cause fouling and plugging of furnace components.

-The temperature of the return air to the furnace is maintained between 55°F (13°C) and 80°F (27°C), with no evening setback or shutdown. The use of the furnace while the structure is under construction is deemed to be intermittent operation per our installation instructions.

-The air temperature rise is within the rated rise range on the furnace rating plate, and the gas input rate has been set to the nameplate value.

-The filters used to clean the circulating air during the construction process must be either changed or thoroughly cleaned prior to occupancy.

-The furnace, ductwork and filters are cleaned as necessary to remove drywall dust and construction debris from all HVAC system components after construction is completed.

-Verify proper furnace operating conditions including ignition, gas input rate, air temperature rise, and venting according to these installation instructions.

### General

These furnaces are shipped with materials to assist in proper furnace installation. These materials are shipped in the main blower compartment. See Table 1 for loose parts bag contents.

This furnace must:

- be installed so the electrical components are protected from water.
- not be installed directly on any combustible material other than wood flooring (refer to **SAFETY CONSIDERATIONS**).
- be located close to the chimney or vent and attached to an air distribution system. Refer to Air Ducts section.
- be provided ample space for servicing and cleaning. Always comply with minimum fire protection clearances shown in **Table** 2 or on the furnace clearance to combustible construction label.

**⚠ WARNING**

**CARBON MONOXIDE POISONING / COMPONENT DAMAGE HAZARD**

Failure to follow this warning could result in personal injury or death and unit component damage.

Corrosive or contaminated air may cause failure of parts containing flue gas, which could leak into the living space. Air for combustion must not be contaminated by halogen compounds, which include fluoride, chloride, bromide, and iodide. These elements can corrode heat exchangers and shorten furnace life. Air contaminants are found in aerosol sprays, detergents, bleaches, cleaning solvents, salts, air fresheners, and other household products. Do not install furnace in a corrosive or contaminated atmosphere. Make sure all combustion and circulating air requirements are met, in addition to all local codes and ordinances.

The following types of furnace installations may require **OUTDOOR AIR** for combustion due to chemical exposures:

- Commercial buildings
- Buildings with indoor pools
- Laundry rooms
- Hobby or craft rooms
- Chemical storage areas

If air is exposed to the following substances, it should not be used for combustion air, and outdoor air may be required for combustion:

- Permanent wave solutions
- Chlorinated waxes and cleaners
- Chlorine based swimming pool chemicals
- Water softening chemicals
- De-icing salts or chemicals
- Carbon tetrachloride
- Halogen type refrigerants
- Cleaning solvents (such as perchloroethylene)
- Printing inks, paint removers, varnishes, etc.
- Hydrochloric acid
- Cements and glues
- Antistatic fabric softeners for clothes dryers
- Masonry acid washing materials

All fuel-burning equipment must be supplied with air for fuel combustion. Sufficient air must be provided to avoid negative

pressure in the equipment room or space. A positive seal must be made between the furnace cabinet and the return-air duct to prevent pulling air from the burner area.

**⚠ WARNING**

**FIRE, INJURY OR DEATH HAZARD**

Failure to follow this warning could result in personal injury, death and/or property damage.

When the furnace is installed in a residential garage, the burners and ignition sources must be located at least 18 in. (457 mm) above the floor. The furnace must be located or protected to avoid damage by vehicles. When the furnace is installed in a public garage, airplane hangar, or other building having a hazardous atmosphere, the furnace must be installed in accordance with the NFPA 54/ANSI Z223.1-2009 or CAN/CSA B149.2-2010. See Fig. 5.

**⚠ WARNING**

**FIRE HAZARD**

Failure to follow this warning could result in personal injury, death and/or property damage.

Do not install the furnace on its back or hang furnace with control compartment facing downward. Safety control operation will be adversely affected. Never connect return-air ducts to the back of the furnace. See Fig. 4.

## Location Relative to Cooling Equipment

The cooling coil must be installed parallel with, or on the downstream side of the unit to avoid condensation in the heat exchangers. When installed parallel with the furnace, dampers or other flow control must prevent chilled air from entering the furnace. If the dampers are manually operated, they must be equipped with means to prevent operation of either unit unless the damper is in the full-heat or full-cool position.



**Table 1 – Factory-Supplied Installation Parts**

| DESCRIPTION | QUANTITY |
|---|---|
| Air Intake Pipe Flange | 1 |
| Vent Pipe Flange | 1 |
| Coupling Flange Gaskets | 2 |
| Sharp Tip Screws (Vent and Inlet Flanges) | 10 |
| Vent Pipe Coupling | 1 |
| Vent Pipe Coupling Clamps | 2 |
| Rubber Drain Elbow | 1 |
| Drain Tube Clamps | 4 |
| 1/2–in. CPVC to 3/4–in. PVC Pipe Adapter | 1 |
| Gas Line Grommet | 1 |
| Junction Box Cover | 1 |
| Junction Box Base | 1 |
| Green Ground Screw | 1 |
| Blunt Tip Screws (Junction Box) | 3 |
| Thermostat Wire Grommet | 1 |
| Drain Extension Tube (Z–pipe) (Provided separately in furnace) | 1 |

**Table 2 – Minimum Clearances to Combustible Materials for All Units**

| POSITION | CLEARANCE |
|---|---|
| Rear | 0 (0 mm) |
| Front (Combustion air openings in furnace and in structure) | 1 in. (25 mm) |
| Required for service | *24 in. (610 mm) |
| All Sides of Supply Plenum | *1 in. (25 mm) |
| Sides | 0 (0 mm) |
| Vent | 0 (0 mm) |
| Top of Furnace | 1 in. (25 mm) |

* Consult local building codes.

NOTES:
1. Doors may vary by model.
2. Minimum return-air openings at furnace, based on metal duct. If flex duct is used, see flex duct manufacturer's recommendations for equivalent diameters.
   a. For 800 CFM-16-in. (406 mm) round or 14 1/2 x 12-in. (368 x 305 mm) rectangle.
   b. For 1200 CFM-20-in. (508 mm) round or 14 1/2 x 19 1/2-in. (368 x 495 mm) rectangle.
   c. For 1600 CFM-22-in. (559 mm) round or 14 1/2 x 22 1/16-in. (368 x 560mm) rectangle.
   d. Return air above 1800 CFM at 0.5 in. w.c. ESP on 24.5" casing, requires one of the following configurations: 2 sides, 1 side and a bottom or bottom only. See Air Delivery table in this document for specific use to allow for sufficient airflow to the furnace.
3. Vent and Combustion air pipes through blower compartment must use accessory "Vent Kit - Through the Cabinet". See accessory list for current part number.

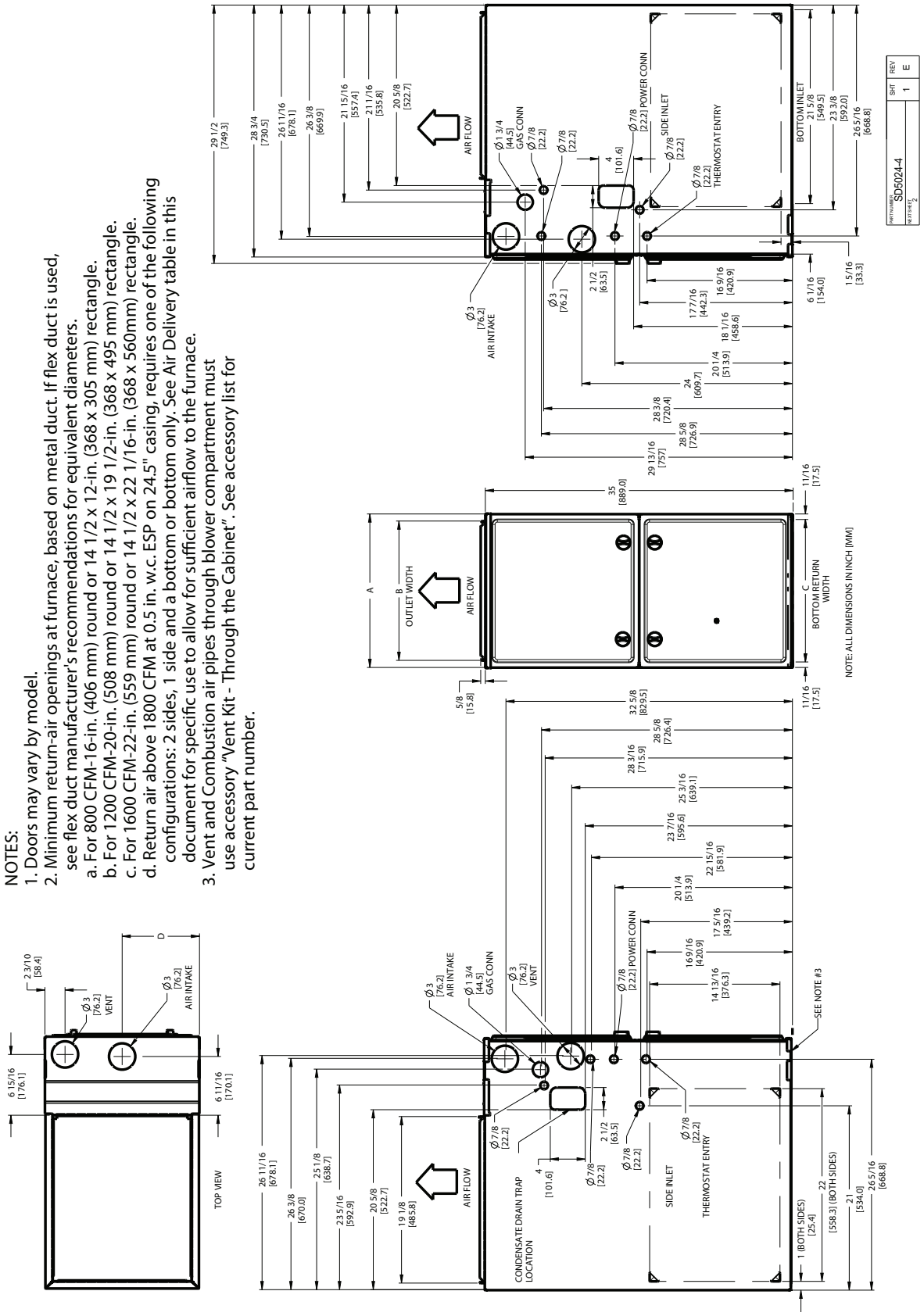


| 987MA FURNACE SIZE | A CABINET WIDTH | B OUTLET WIDTH | C BOTTOM INLET WIDTH | D AIR INTAKE | SHIP WT. LB (KG) |
|---|---|---|---|---|---|
| 42060 | 17 – 1/2 (445) | 15 – 7/8 (403) | 16 (406) | 8 – 3/4 (222) | 154.0 (69.3) |
| 42080 | | | | | 164.0 (73.8) |
| 60060 | 21 (533) | 19 – 3/8 (492) | 19 – 1/2 (495) | 10 – 1/2 (267) | 158.5 (72.0) |
| 60080 | | | | | 168.5 (76.6) |
| 66100 | | | | | 178.5 (80.3) |
| 66120 | 24 – 1/2 (622) | 22 – 7/8 (581) | 23 (584) | 12 – 1/4 (311) | 202.5 (91.1) |

**Fig. 1 - Dimensional Drawing**

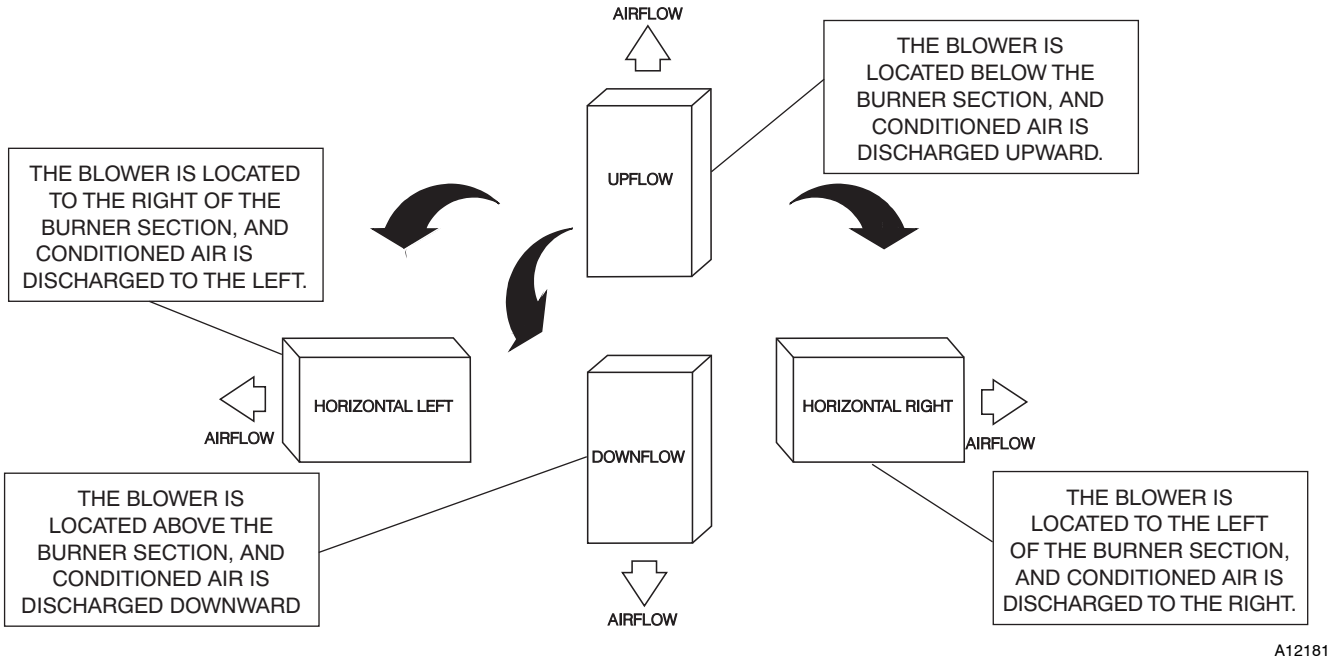


**Fig. 2 - Multipoise Orientations**

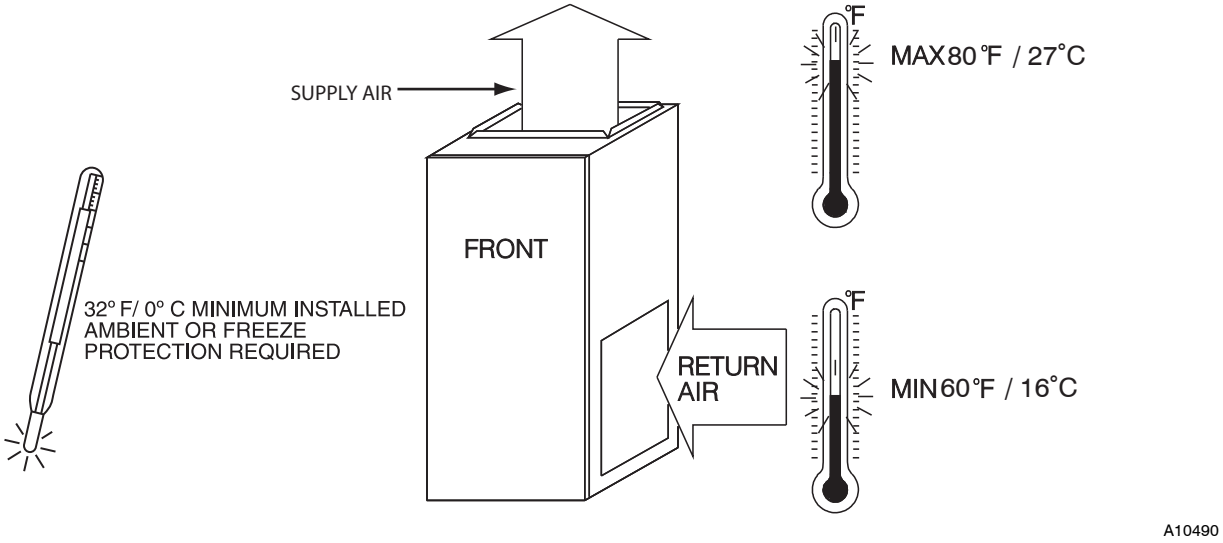


**Fig. 3 - Freeze Protection and Return Air Temperature**

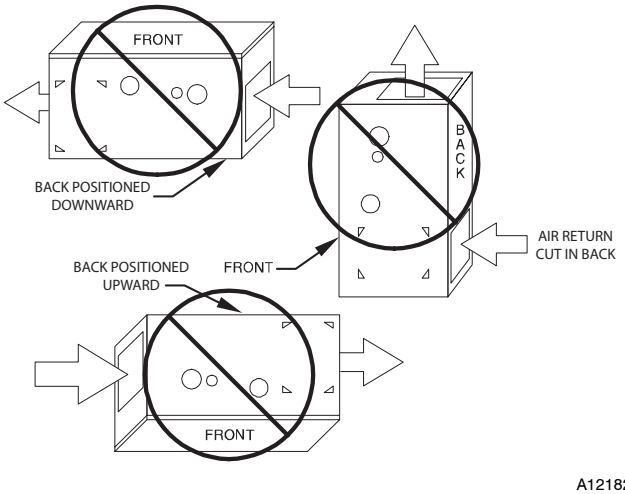


**Fig. 4 - Prohibited Installations**

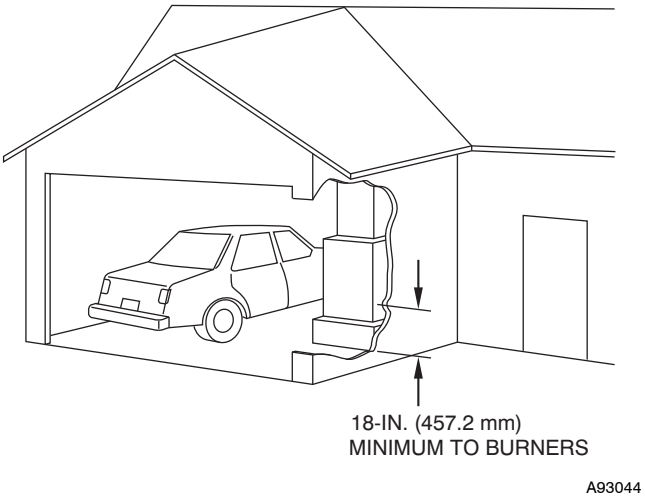


**Fig. 5 - Installation in a Garage**

# AIR FOR COMBUSTION AND VENTILATION

## Introduction

### Direct Vent (2-pipe) Applications

When the furnace is installed as a direct vent (2-pipe) furnace, no special provisions for air for combustion are required. However, other gas appliances installed in the space with the furnace may require outside air for combustion. Follow the guidelines below to insure that other gas appliances have sufficient air for combustion.

### Ventilated Combustion Air Applications

When the furnace is installed using the ventilated combustion air option, the attic or crawlspace must freely communicate with the outdoor to provide sufficient air for combustion. The combustion air pipe cannot be terminated in attics or crawlspaces that use ventilation fans designed to operate during the heating season. If ventilation fans are present in these areas, the combustion air pipe must terminate outdoors as a Direct Vent/ 2-Pipe system.

All air for combustion is piped directly to the furnace from a space that is well ventilated with outdoor air (such as an attic, crawl space, or equipment closet) and the space is well isolated from the living space or garage. In addition, other gas appliances installed in the space with the furnace may require outside air for combustion. Follow the guidelines below to insure that the roof or crawlspace walls have sufficient free area to provide sufficient air for combustion and ventilation for the furnaces. The guidelines below can be used to insure that other gas appliances have sufficient air for combustion.

Provisions for adequate combustion, ventilation, and dilution air must be provided in accordance with:

- U.S.A. Installations: Section 9.3 of the NFPA 54/ANSI Z223.1-2009 , Air for Combustion and Ventilation and applicable provisions of the local building codes.
- Canada: Part 8 of the CAN/CSA-B149.1-2010, Venting Systems and Air Supply for Appliances.

**⚠ CAUTION**

**FURNACE CORROSION HAZARD**

Failure to follow this caution may result in furnace damage.

Air for combustion must not be contaminated by halogen compounds, which include fluoride, chloride, bromide, and iodide. These elements can corrode heat exchangers and shorten furnace life. Air contaminants are found in aerosol sprays, detergents, bleaches, cleaning solvents, salts, air fresheners, and other household products.

**⚠ WARNING**

**CARBON MONOXIDE POISONING HAZARD**

Failure to follow this warning could result in personal injury or death.

The operation of exhaust fans, kitchen ventilation fans, clothes dryers, attic exhaust fans or fireplaces could create a NEGATIVE PRESSURE CONDITION at the furnace. Make-up air MUST be provided for the ventilation devices, in addition to that required by the furnace. Refer to the Carbon Monoxide Poisoning Hazard warning in the venting section of these instructions to determine if an adequate amount of make-up air is available.

### Outdoor Combustion Air Method

1. Provide the space with sufficient air for proper combustion, ventilation, and dilution of flue gases using permanent horizontal or vertical duct(s) or opening(s) directly communicating with the outdoors or spaces that freely communicate with the outdoors.
2. **Fig.** 6 illustrates how to provide **TWO OUTDOOR OPENINGS**, one inlet and one outlet combustion and ventilation air opening, to the outdoors.
   a. One opening **MUST** commence within 12 in. (300 mm) of the ceiling and the second opening MUST commence within 12 in. (300 mm) of the floor.
   b. Size openings and ducts per Fig. 6 and Table 3.
   c. **TWO HORIZONTAL DUCTS** require 1 sq. in. (645 sq. mm) of free area per 2,000 Btuh (1,100 $mm^2$/kW) of combined input for all gas appliances in the space per Fig. 6 and Table 3.
   d. **TWO OPENINGS OR VERTICAL DUCTS** require 1 sq. in. (645 sq. mm) of free area per 4,000 Btuh (550 $mm^2$/kW) for combined input of all gas appliances in the space per Fig. 6 and Table 3.
3. **ONE OUTDOOR OPENING** requires:
   a. 1 sq. in. (645 sq. mm) of free area per 3,000 Btuh (734 $mm^2$/kW) for combined input of all gas appliances in the space per Fig. 6 and Table 3.
   b. Not less than the sum of the areas of all vent connectors in the space.

The opening shall commence within 12 in. (300 mm) of the ceiling. Appliances in the space shall have clearances of at least 1 in. (25 mm) from the sides and back and 6 in. (150 mm) from the front. The opening shall directly communicate with the outdoors or shall communicate through a vertical or horizontal duct to the outdoors or spaces (crawl or attic) that freely communicate with the outdoors.

**Table 3 – Minimum Free Area Required for Each Combustion Air Opening or Duct to Outdoors**

| FURNACE INPUT (BTUH) | TWO HORIZONTAL DUCTS (1 SQ. IN./2,000 BTUH) (1,100 SQ. MM/KW) | | SINGLE DUCT OR OPENING (1 SQ. IN./3,000 BTUH) (734 SQ. MM/KW) | | TWO OPENINGS OR VERTICAL DUCTS (1 SQ. IN./4,000 BTUH) (550 SQ. MM/KW) | |
|---|---|---|---|---|---|---|
| | Free Area of Opening and Duct Sq. In (Sq. mm) | Round Duct In. (mm) Dia | Free Area of Opening and Duct Sq. In (Sq. mm) | Round Duct In. (mm) Dia | Free Area of Opening and Duct Sq. In (mm) | Round Duct In. (mm) Dia. |
| **40,000*** | 20 (12904) | 5 (127) | 14 (8696) | 5 (127) | 10 (6452) | 4 (102) |
| **60,000** | 30 (19355) | 6 (152) | 20 (13043) | 5 (127) | 15 (9678) | 5 (127) |
| **80,000** | 40 (25807) | 7 (178) | 27 (17391) | 6 (152) | 20 (12904) | 5 (127) |
| **100,000** | 50 (32258) | 8 (203) | 34 (21739) | 7 (178) | 25 (16130) | 6 (152) |
| **120,000** | 60 (38709) | 9 (229) | 40 (26087) | 7 (178) | 30 (19355) | 6 (152) |
| **140,000*** | 70 (45161) | 10 (254) | 47 (30435) | 8 (203) | 35 (22581) | 7 (178) |

*Not all families have these models.

**EXAMPLES: Determining Free Area**

| FURNACE | | WATER HEATER | | TOTAL INPUT | | |
|---|---|---|---|---|---|---|
| 100,000 | + | 30,000 | = | (130,000 divided by 4,000) | = | 32.5 Sq. In. for each two Vertical Ducts or Openings |
| 60,000 | + | 40,000 | = | (100,000 divided by 3,000) | = | 33.3 Sq. In. for each Single Duct or Opening |
| 80,000 | + | 30,000 | = | (110,000 divided by 2,000) | = | 55.0 Sq. In. for each two Horizontal Ducts |

**Table 4 – Minimum Space Volumes for 100% Combustion, Ventilation and Dilution Air from Outdoors**

| ACH | OTHER THAN FAN-ASSISTED TOTAL (1,000'S BTUH GAS INPUT RATE) | | | FAN-ASSISTED TOTAL (1,000'S BTUH GAS INPUT RATE) | | | | | |
|---|---|---|---|---|---|---|---|---|---|
| | 30 | 40 | 50 | 40 | 60 | 80 | 100 | 120 | 140 |
| | Space Volume $Ft^3$ ($M^3$) | | | | | | | | |
| **0.60** | 1,050 (29.7) | 1,400 (39.6) | 1,750 (49.5) | 1,400 (39.6) | 1,500 (42.5) | 2,000 (56.6) | 2,500 (70.8) | 3,000 (84.9) | 3,500 (99.1) |
| **0.50** | 1,260 (35.6) | 1,680 (47.5) | 2,100 (59.4) | 1,680 (47.5) | 1,800 (51.0) | 2,400 (67.9) | 3,000 (84.9) | 3,600 (101.9) | 4,200 (118.9) |
| **0.40** | 1,575 (44.5) | 2,100 (59.4) | 2,625 (74.3) | 2,100 (59.4) | 2,250 (63.7) | 3,000 (84.9) | 3,750 (106.1) | 4,500 (127.3) | 5,250 (148.6) |
| **0.30** | 2,100 (59.4) | 2,800 (79.2) | 3,500 (99.1) | 2,800 (79.2) | 3,000 (84.9) | 4,000 (113.2) | 5,000 (141.5) | 6,000 (169.8) | 7,000 (198.1) |
| **0.20** | 3,150 (89.1) | 4,200 (118.9) | 5,250 (148.6) | 4,200 (118.9) | 4,500 (127.3) | 6,000 (169.8) | 7,500 (212.2) | 9,000 (254.6) | 10,500 (297.1) |
| **0.10** | 6,300 (178.0) | 8,400 (237.8) | 10,500 (297.3) | 8,400 (237.8) | 9,000 (254.6) | 12,000 (339.5) | 15,000 (424.4) | 18,000 (509.2) | 21,000 (594.1) |
| **0.00** | NP | NP | NP | NP | NP | NP | NP | NP | NP |

NP = Not Permitted

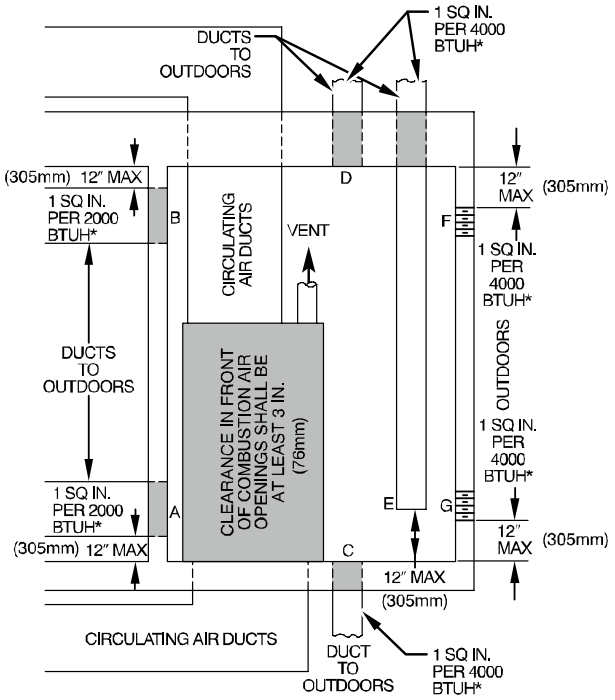


*Minimum dimensions of 3-in. (76mm)
**NOTE**: Use any of the following combinations of openings:
A & B, C & D, D & E, F & G

L12F012

**Fig. 6 - Air for Combustion, Ventilation, and Dilution for Outdoors**

## CONDENSATE TRAP

### Condensate Trap-Upflow Orientation

When the furnace is installed in the upflow position, it is not necessary to relocate the condensate trap or associated tubing. Refer to Fig. 7 for upflow condensate trap information. Refer to Condensate Drain section for information how to install the condensate drain.

### Condensate Trap-Downflow Orientation.

When the furnace is installed in the downflow position, the condensate trap will be initially located at the upper left corner of the collector box, as received from the factory. See the top image in Fig. 8. When the furnace is installed in the downflow orientation, the condensate trap must be relocated for proper condensate drainage. See the bottom image in Fig. 8.

**To Relocate the Condensate Trap:**

- Orient the furnace in the downflow position.
- Fig. 8 shows the condensate trap and tubing before and after relocation. Refer to Fig. 8 To begin the trap conversion.
- Refer to Condensate Drain section for information how to install the condensate drain.

### Condensate Trap-Horizontal Orientation.

When the furnace is installed in the horizontal right position, the condensate trap will be initially located at the bottom left corner of the collector box, as received from the factory. See the top image in Fig. 9. When the furnace is installed in the horizontal left position, the condensate trap will be initially located at the top of the collector box, as received from the factory. See the top image in Fig. 10. In both cases, the trap must be repositioned on the collector box for proper condensate drainage. See the bottom images in Fig. 9 and 10.

A field-supplied, accessory Horizontal Installation kit (trap grommet) is required for all direct-vent horizontal installations (only). The kit contains a rubber casing grommet designed to seal between the furnace casing and the condensate trap. See Fig. 17.

**NOTICE**

The field-supplied, accessory horizontal drain trap grommet is ONLY REQUIRED FOR DIRECT VENT APPLICATIONS. It it **NOT** required for applications using single-pipe or ventilated combustion air venting.

**NOTICE**

The condensate trap extends below the side of the casing in the horizontal position. A minimum of 2-in. (51 mm) of clearance is required between the casing side and the furnace platform for the trap to extend out of the casing in the horizontal position. Allow at least 1/4-in. per foot (20 mm per meter) of slope down.

**To Relocate the Condensate Trap:**

- Remove the knockout in the casing for the condensate trap.
- Install the grommet in the casing when required for direct-vent horizontal applications.
- Orient the furnace in the desired position.
- Allow for 2 in. (51 mm) of clearance underneath the furnace for the condensate trap and drain line.
- Fig. 9 shows the condensate trap and tubing before and after relocation in the horizontal right position.
- Fig. 10 shows the condensate trap and tubing before and after relocation in the horizontal left position.
- Refer to the appropriate figure to begin the trap conversion.
- Refer to Condensate Drain section for information how to install the condensate drain.



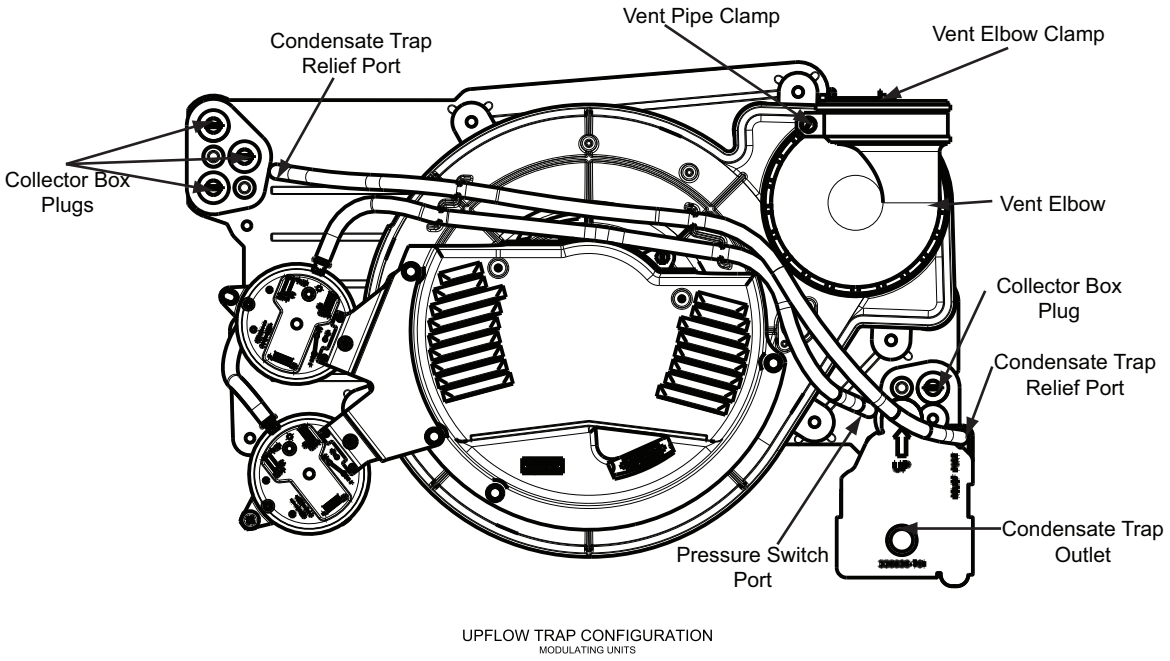


**Fig. 7 - Upflow Trap Configuration (Appearance May Vary)**

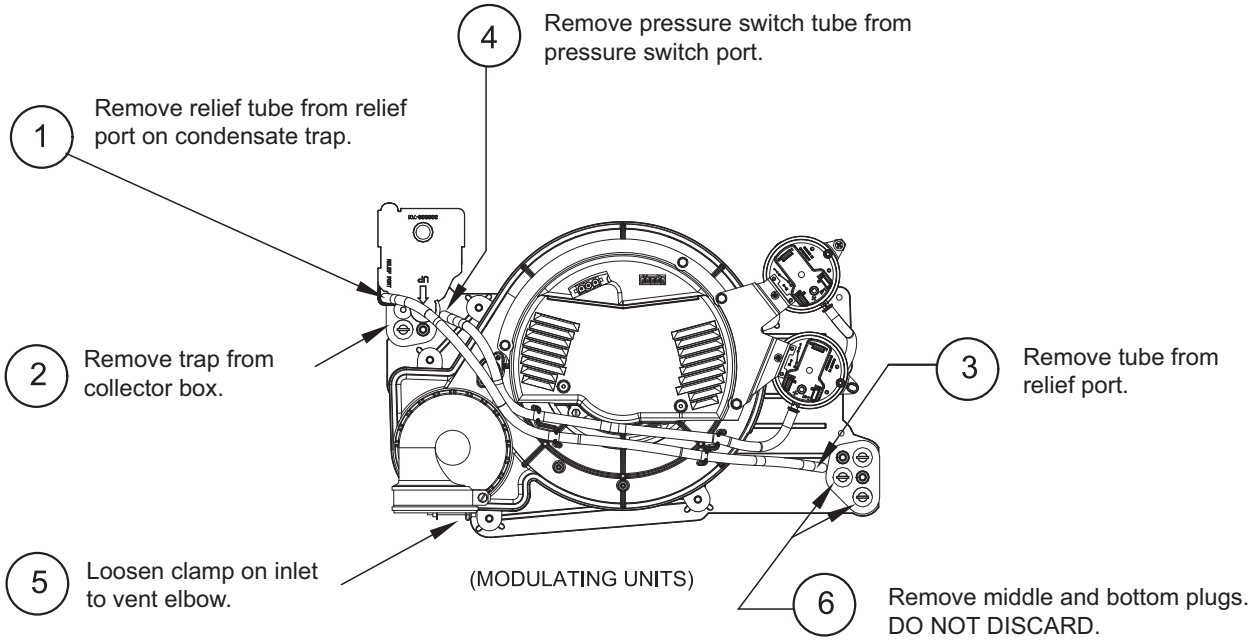


**Unconverted Factory Configuration As Viewed in the Downflow Orientation**

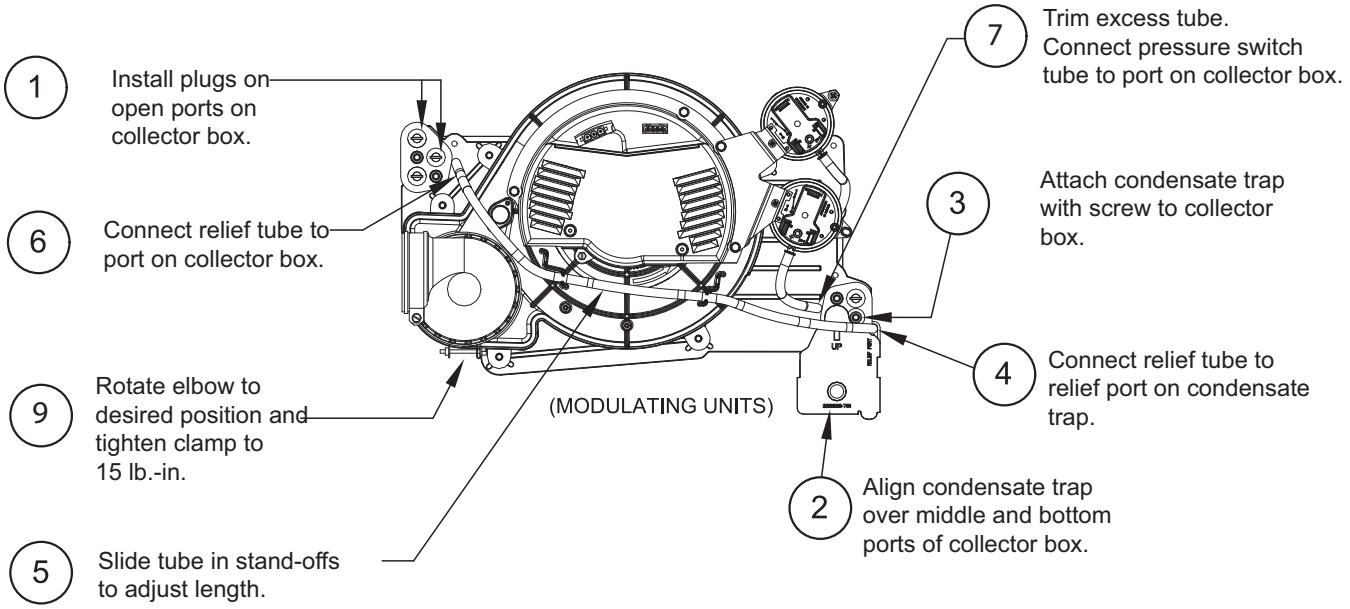


**Downflow Trap Configuration**

A11585

**Fig. 8 – Downflow Trap Configuration (Appearance May Vary)**

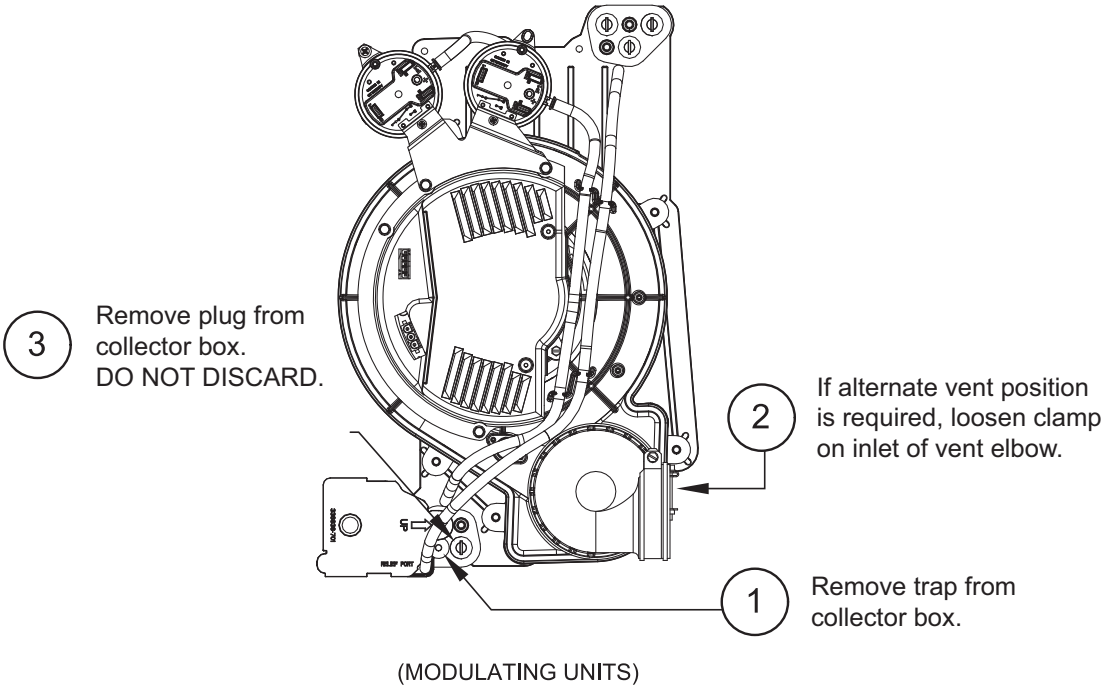


## Unconverted Factory Trap Configuration As Viewed in the Horizontal Right Orientation

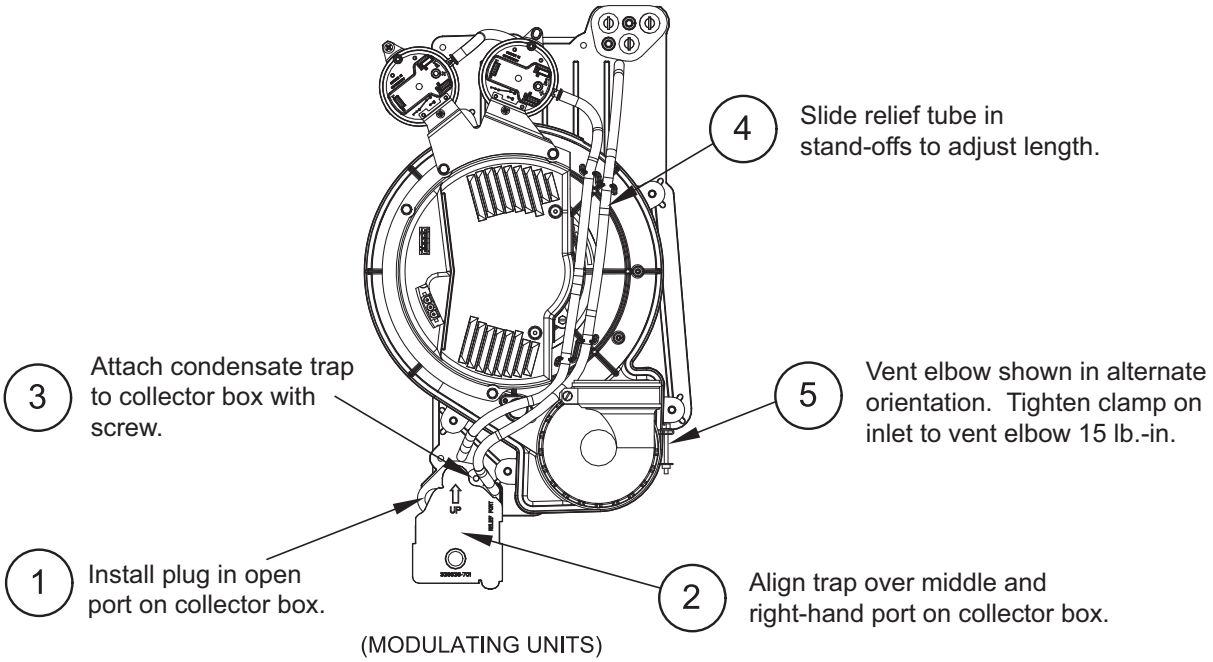


## Horizontal Right Trap Configuration

A11278

**Fig. 9 - Horizontal Right Trap Configuration (Appearance May Vary)**

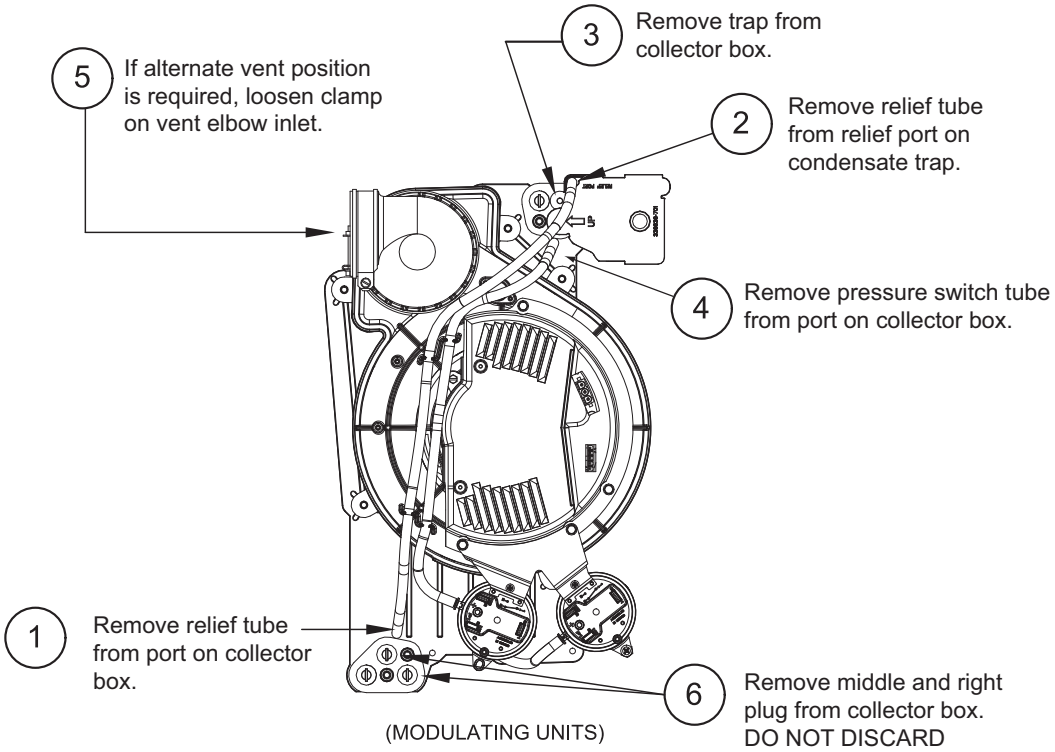


**Unconverted Factory Trap Configuration**
**As Viewed in the Horizontal Left Orientation**

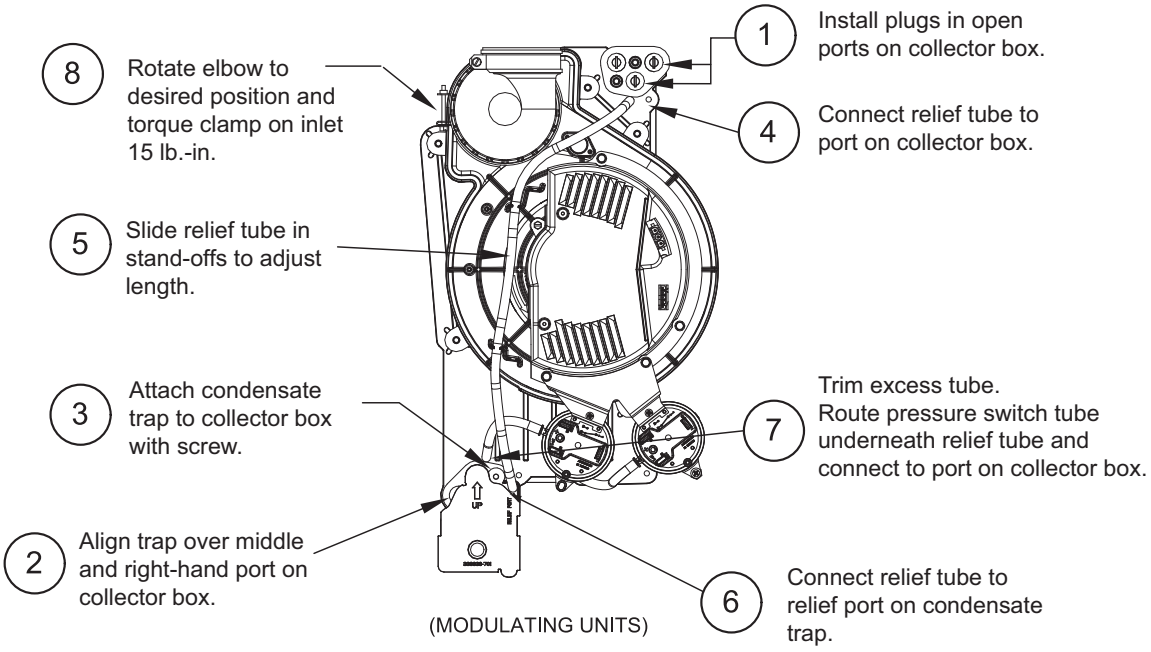


**Horizontal Left Trap Configuration**

A11586

**Fig. 10 - Horizontal Left Configuration**
**(Appearance May Vary)**

## CONDENSATE DRAIN CONNECTION

**⚠ CAUTION**

**FROZEN AND BURST WATER PIPE HAZARD**

Failure to protect against the risk of freezing may result in property damage.

Special precautions MUST be made if installing furnace in an area which may drop below freezing. This can cause improper operation or damage to equipment. If furnace environment has the potential of freezing, the drain trap and drain line must be protected. The use of accessory drain trap heaters, electric heat tape and/or RV antifreeze is recommended for these installations.

**⚠ CAUTION**

**PROPERTY DAMAGE HAZARD**

Failure to follow this caution may result in burst water pipes and/or property damage.

If a condensate pump is installed, a plugged condensate drain or a failed pump may cause the furnace to shut down. Do not leave the home unattended during freezing weather without turning off water supply and draining water pipes or otherwise protecting against the risk of frozen pipes.

DO NOT trap the drain line in any other location than at the condensate drain trap supplied with the furnace. If possible, DO NOT route the drain line where it may freeze. The drain line must terminate at an inside drain to prevent freezing of the condensate and possible property damage.

Special precautions MUST be made if installing furnace in an area which may drop below freezing. This can cause improper operation or damage to the equipment. If the furnace environment has the potential of freezing, the drain trap and drain line must be protected. A self-regulating, shielded and waterproof heat tape rated at 3 to 6 watt per foot (10 to 20 watt per meter) at 115 volt, 40°F (4°C) may be used to help provide freeze protection. Wrap the drain trap and drain line with the heat tape and secure with appropriate plastic ties. Follow the heat tape manufacturer's recommendations. Prime the trap before furnace operation.

### Upflow/Downflow Orientation

In the Upflow or Downflow orientation, the condensate trap is inside the furnace casing. The condensate drain must be routed from the trap through the furnace casing. The condensate drain can be routed through the left or right side of the casing. (The left or right side is as you are viewing/facing the furnace from the front.) The furnace condensate drain can be connected to the indoor coil condensate drain, humidifier or auxiliary drain traps as shown in Fig. 12.

**NOTE**: On narrower casings, it may be easier to remove the condensate trap, connect the drain line components and re-install the condensate trap. Read the steps thoroughly to familiarize yourself with the required steps.

### For Right Side Condensate Drain:

1. Remove the 7/8-in. knock-out from the right side of the casing. See Fig. 11 for suggested knockout removal technique.
2. Remove the pre-formed rubber drain elbow and two spring clamps from the loose parts bag.
3. Slide a spring clamp 1-in. (25 mm) down the plain end (the end without the formed grommet) of the drain elbow.
4. From inside the casing, insert the formed grommet end of the elbow through the 7/8-in. knockout in the casing.
5. Pull the grommet through the casing from the outside until it is seated in the knockout
6. Attach the plain end of the drain elbow to the outlet stub on the drain trap. Secure the drain elbow to the trap with the spring clamp.

The remaining drain line can be constructed from field supplied 1/2-in. CPVC or 3/4-in. PVC pipe, in compliance with local building codes. A factory-supplied 1/2-in. CPVC to 3/4-in. PVC adapter is supplied in the loose parts bag for use as required.

7. Install the adapter or connect the 1/2-in. CPVC pipe by sliding a spring clamp over the open end of the grommet on the outside the furnace casing.
8. Open the spring clamp and insert the long end of the adapter or the 1/2-in. CPVC pipe into the outlet stub on the drain tube.
9. Connect additional condensate piping to a code-approved drain, or to a condensate pump approved for use with acidic furnace condensate and compatible with mineral and vegetable oils, such as canola oil.

Allow at least 1/4-in. per foot (20 mm per meter) of slope down and away from the furnace in horizontal sections of drain line.

**TIP FROM CONTRACTORS**: Contractors have found that temporarily removing the inducer assembly in upflow applications while performing the steps, below, makes upflow left-side drain connections easier.

### For Left Side Condensate Drain Connection:

1. For left side condensate drainage, the drain line is routed from the condensate trap, behind the inducer (upflow) or gas valve (downflow) and out through the left side of the furnace casing. A pre-formed 1/2-in. CPVC "Z-pipe" is provided with the furnace. The Z-pipe is long enough to extend across the casing for drain connections.
2. Locate the Z-pipe. Remove the pre-formed drain elbow and four spring clamps from the loose parts bag.
3. The Z-pipe is connected to the condensate trap and the outside of the furnace by modifying the formed rubber drain elbow as shown in Fig. 14.
4. Remove the formed grommet from the rubber drain elbow by cutting the elbow along the vertical line located about 1-3/8 in. (35 mm) away from the formed grommet. See Fig. 14. **DO NOT DISCARD THE FORMED GROMMET OR THE RUBBER ELBOW**. Both of these pieces will be used.

Assemble and route the drain line to the opposite side of the furnace as detailed below:

5. Remove the knock-out from the left side of the casing. See Fig. 11 for suggested knockout removal technique.
6. From the outside of the casing, insert the angled end of the Z-pipe through drain hole in the left side of the casing and behind the inducer or gas valve. Allow the Z-pipe to temporarily rest on the blower shelf (upflow) or burner box (downflow). (**NOTE**: When the inducer housing has been removed to ease installation in upflow applications, this step is not needed.)
7. After inserting the Z-pipe through the casing, slide a spring clamp over each end of the Z-pipe.
8. From inside the casing, insert the short end of the formed grommet cut from the rubber drain elbow through the 7/8-in. drain knockout in the casing.
9. Pull the grommet through the casing from the outside until it is seated in the knockout.
10. Align the Z-pipe with the long end of the grommet inside the furnace and insert slightly. The angled end of the tube at

the other side of the casing should be facing the front of the furnace.

11. Slide a spring clamp over the end of the remaining rubber drain elbow.
12. Attach the drain elbow to the angled end of Z-pipe and the drain trap outlet stub. Adjust the length of Z-pipe inserted into the grommet at the opposite side of the furnace as necessary for proper fit and positioning. In both upflow and downflow orientations, the Z-pipe should NOT be resting on any sheet metal parts.
13. Secure the rubber elbow to the drain trap and the Z-pipe with spring clamps.
14. Secure the grommet to the Z-pipe with the spring clamp.

The remaining drain line can be constructed from field supplied 1/2-in. CPVC or 3/4-in. PVC pipe, in compliance with local building codes. A factory-supplied 1/2-in. CPVC to 3/4-in. PVC adapter is supplied in the loose parts bag for use as required.

15. Install the adapter or connect the 1/2-in. CPVC pipe by sliding a spring clamp over the open end of the grommet on the outside the furnace casing.
16. Open the spring clamp and insert the long end of the adapter or the 1/2-in. CPVC pipe into the outlet stub on the drain tube.
17. Connect additional condensate piping to a code-approved drain, or to a condensate pump approved for use with acidic furnace condensate and compatible with mineral and vegetable oils, such as canola oil.

Allow at least 1/4-in. per foot (20 mm per meter) of slope down and away from the furnace in horizontal sections of drain line.

## NOTICE

The field-supplied, accessory horizontal drain trap grommet is ONLY REQUIRED FOR DIRECT VENT APPLICATIONS. It is NOT required for applications using single-pipe or ventilated combustion air venting.

**TIP FROM CONTRACTORS**: When installing the furnace horizontally, use the entire drain elbow (that is, do NOT cut as shown in Fig. 14 to connect the trap to the drain line. This helps to prevent bumps and shocks to the drain line from damaging the furnace drain trap. Avoid misalignment of the drain pipe which may cause kinks in the elbow.

### Horizontal Orientation

1. The condensate trap outlet extends 2-in. (51 mm) below the furnace casing. Leave enough clearance between the furnace and the furnace platform for the trap.
2. To allow for servicing the trap, the condensate drain elbow in the loose parts bag can be used to make a coupler to allow for future service of the condensate trap and drain line.
3. Remove the knock-out for the condensate trap in the side of the casing.
4. Install the drain trap grommet in the casing if required for direct-vent applications. If necessary, remove the trap, install the grommet and re-install the trap.
5. Remove the pre-formed rubber drain elbow, and two spring clamps from the loose parts bag.
6. Connect the full or modified elbow and/or grommet to the outlet of the condensate trap with one spring clamp. Avoid misalignment of the drain pipe which may cause kinks in the elbow or grommet.
7. The remaining drain line can be constructed from field-supplied 1/2-in. CPVC or 3/4-in. PVC pipe, in compliance with local building codes. A factory-supplied 1/2-in. CPVC to 3/4-in. PVC adapter is supplied in the loose parts bag for use as required.
8. Install the adapter or connect the 1/2-in. CPVC pipe by sliding a spring clamp over the open end of the elbow or grommet on the outside the furnace casing.
9. Open the spring clamp and insert the long end of the adapter or the 1/2-in. CPVC pipe into the outlet stub on the drain tube.
10. Connect additional condensate piping to a code-approved drain, or to a condensate pump approved for use with acidic furnace condensate and compatible with mineral and vegetable oils, such as canola oil.

Allow at least 1/4-in. per foot (20 mm per meter) of slope down and away from the furnace in horizontal sections of drain line.

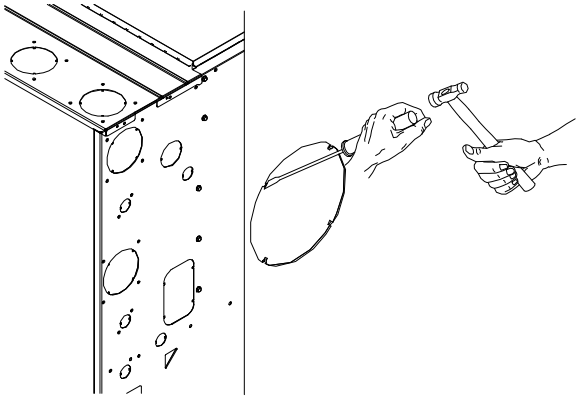

## ⚠ CAUTION

**CUT HAZARD**

Failure to follow this caution may result in personal injury.

Sheet metal parts may have sharp edges or burrs. Use care and wear appropriate protective clothing, safety glasses and gloves when handling parts, and servicing furnaces.

L12F019B

**Fig. 11 - Knockout Removal**

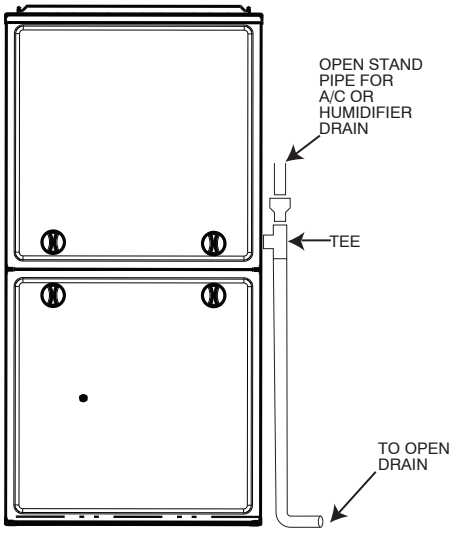


A11276

**Fig. 12 - Example of Field Drain Attachment**

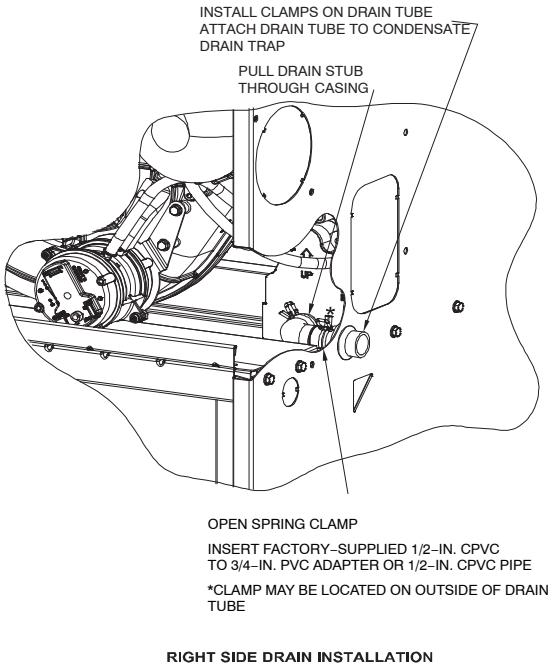


**Fig. 13 - Formed Rubber Drain Grommet**

NOTE: Trap grommet is required only for direct-vent applications.

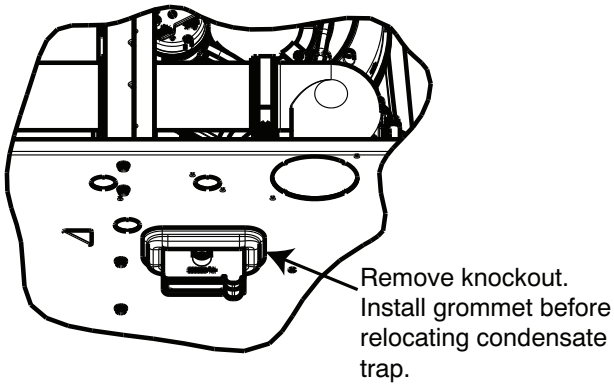


**Fig. 15 - Horizontal Drain Trap Grommet**

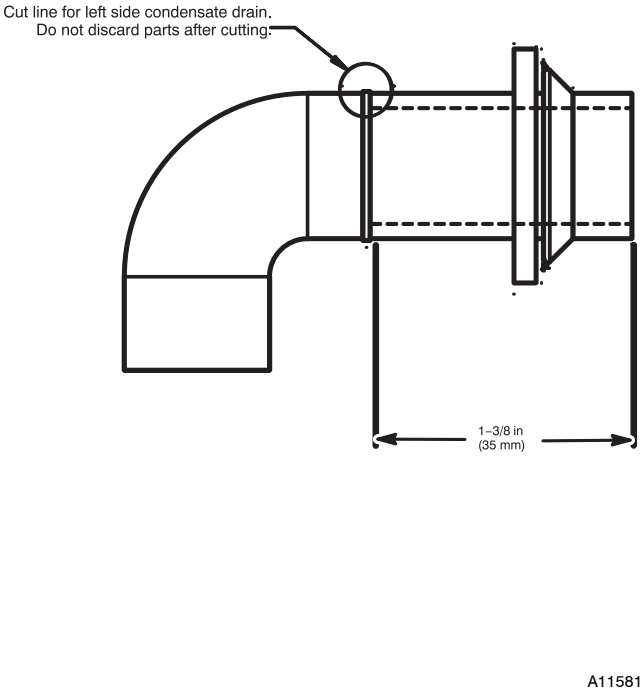


**Fig. 14 - Modify Rubber Drain Elbow**

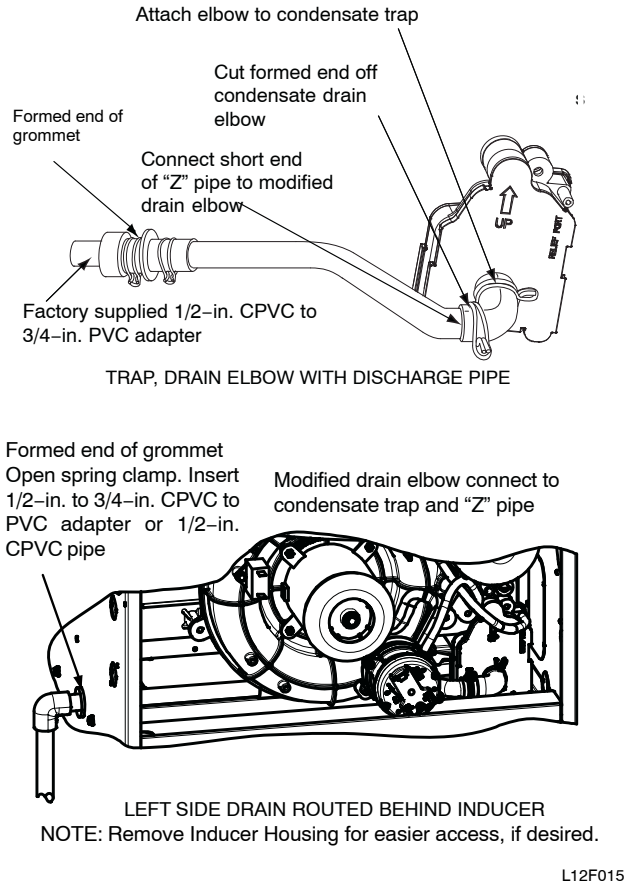


**Fig. 16 - Drain Trap Connection and Routing (Appearance may vary)**

# NOTICE

This furnace is certified to leak 2% or less of nominal air conditioning CFM delivered when pressurized to 1-in. water column with all present air inlets, including bottom closure in upflow and horizontal applications, air outlets, and plumbing and electrical ports sealed.

## Upflow Installation

**NOTE:** The furnace must be pitched as shown in Fig. 22 for proper condensate drainage.

### Supply Air Connections

For a furnace not equipped with a cooling coil, the outlet duct shall be provided with a removable access panel. This opening shall be accessible when the furnace is installed and shall be of such a size that the heat exchanger can be viewed for possible openings using light assistance or a probe can be inserted for sampling the air stream. The cover attachment shall prevent leaks.

Connect supply-air duct to flanges on furnace supply-air outlet. Bend flange upward to 90° with wide duct pliers. See Fig. 19. The supply-air duct must be connected to ONLY the furnace supply-outlet-air duct flanges or air conditioning coil casing (when used). DO NOT cut main furnace casing side to attach supply air duct, humidifier, or other accessories. All supply-side accessories MUST be connected to duct external to furnace main casing.

### Return Air Connections

# ⚠ WARNING

**FIRE HAZARD**

A failure to follow this warning could cause personal injury, death and/or property damage.

Never connect return-air ducts to the back of the furnace. Follow instructions below.

The return-air duct must be connected to bottom, sides (left or right), or a combination of bottom and side(s) of main furnace casing. Bypass humidifier may be attached into unused return air side of the furnace casing. See Fig. 23, 24, 25.

**Bottom Return Air Inlet**

These furnaces are shipped with bottom closure panel installed in bottom return-air opening. Remove this panel when bottom return air is used. This panel may be used as the bottom closure of an accessory bottom return air box, or discarded. To remove bottom closure panel, perform the following:

1. Tilt or raise furnace and remove 4 screws holding bottom plate. See Fig. 21.
2. Remove bottom plate.
3. Remove bottom closure panel.
4. Reinstall bottom plate and screws.

**Side Return Air Inlet**

These furnaces are shipped with bottom closure panel installed in bottom return-air opening. This panel MUST be in place when only side return air is used.

**NOTE**: Side return-air openings can be used in UPFLOW and some HORIZONTAL configurations. Do not use side return-air openings in DOWNFLOW configuration. See Fig. 23, 24, and 25.

**Leveling Legs (If Desired)**

In upflow position with side return inlet(s), leveling legs may be used. See Fig. 20. Install field-supplied, 5/16 x 1-1/2 in. (8 x 38 mm) (max) corrosion-resistant machine bolts, washers and nuts.

**NOTE**: Bottom closure must be used when leveling legs are used. It may be necessary to remove and reinstall bottom closure panel to install leveling legs. To remove bottom closure panel, see Item 1 in Bottom Return Air Inlet section in Step 1 above.

To install leveling legs:

1. Position furnace on its back. Locate and drill a hole in each bottom corner of furnace.
2. For each leg, install nut on bolt and then install bolt with nut in hole. (Install flat washer if desired.)
3. Install another nut on other side of furnace base. (Install flat washer if desired.)
4. Adjust outside nut to provide desired height, and tighten inside nut to secure arrangement.
5. Reinstall bottom closure panel if removed.

## Downflow Installation

**NOTE:** The furnace must be pitched as shown in Fig. 22 for proper condensate drainage.

### Supply Air Connections

**NOTE**: For downflow applications, this furnace is approved for use on combustible flooring when any one of the following 3 accessories are used:

- Special Base, KGASB
- Cased Coil Assembly Part No. CNPV, CNRV, CAP, or CAR
- Coil Box Part No. KCAKC

1. Determine application being installed from Table 8.
2. Construct hole in floor per Table 8 and Fig. 18.
3. Construct plenum to dimensions specified in Table 8 and Fig. 18.
4. Install special base coil assembly or coil box as shown in in Fig. 18.

**NOTE**: It is recommended that the perforated supply-air duct flanges be completely removed from furnace when installing the furnace on a factory-supplied cased coil or coil box. To remove the supply-air duct flange, use wide duct pliers or hand seamers to bend flange back and forth until it breaks off. Be careful of sharp edges. See Fig. 19.

# ⚠ CAUTION

**CUT HAZARD**

Failure to follow this caution may result in personal injury.

Sheet metal parts may have sharp edges or burrs. Use care and wear appropriate protective clothing, safety glasses and gloves when handling parts, and servicing furnaces.

Connect supply-air duct to supply-air outlet on furnace. Bend flange inward past 90° with wide duct pliers. See Fig. 19. The supply-air duct must be connected to ONLY the furnace supply outlet or air conditioning coil casing (when used). When installed on combustible material, supply-air duct must be connected to **ONLY** the factory-approved accessory subbase, or a factory-approved air conditioning coil casing. **DO NOT** cut main furnace casing to attach supply side air duct, humidifier, or other accessories. All supply-side accessories MUST be connected to duct external to furnace casing.

### Return Air Connections

**⚠ WARNING**

**FIRE HAZARD**

A failure to follow this warning could cause personal injury, death and/or property damage.

Never connect return-air ducts to the back of the furnace. Follow instructions below.

The return-air duct must be connected to return-air opening (bottom inlet). **DO NOT** cut into casing sides (left or right). Bypass humidifier connections should be made at ductwork or coil casing sides exterior to furnace. See Fig. 24.

**Bottom Return Air Inlet**

These furnaces are shipped with bottom closure panel installed in bottom return-air opening. Remove and discard this panel when bottom return air is used in downflow applications. To remove bottom closure panel, perform the following:

1. Tilt or raise furnace and remove 4 screws holding bottom plate. See Fig. 21.
2. Remove bottom plate.
3. Remove bottom closure panel.
4. Reinstall bottom plate and screws.

## Horizontal Installation

**NOTE:** The furnace must be pitched forward as shown in Fig. 22 for proper condensate drainage.

**⚠ WARNING**

**FIRE, EXPLOSION, AND CARBON MONOXIDE POISONING HAZARD**

Failure to follow this warning could result in personal injury, death, or property damage.

Do not install the furnace on its back or hang furnace with control compartment facing downward. Safety control operation will be adversely affected. Never connect return-air ducts to the back of the furnace.

**⚠ CAUTION**

**MINOR PROPERTY HAZARD**

Failure to follow this caution may result in minor property damage.

Local codes may require a drain pan under entire furnace and condensate trap when a condensing furnace is used in an attic application or over a finished ceiling.

The furnace can be installed horizontally in an attic or crawlspace on either the left-hand (LH) or right-hand (RH) side. The furnace can be hung from floor joists, rafters or trusses or installed on a non-combustible platform, blocks, bricks or pad.

### Platform Furnace Support

Construct working platform at location where all required furnace clearances are met. See Table 2 and Fig. 26.) For furnaces with 1-in. (25 mm) clearance requirement on side, set furnace on non-combustible blocks, bricks or angle iron. For crawlspace installations, if the furnace is not suspended from the floor joists, the ground underneath furnace must be level and the furnace set on blocks or bricks.

### Suspended Furnace Support

The furnace must be supported under the entire length of the furnace with threaded rod and angle iron. See Fig. 27. Secure angle iron to bottom of furnace as shown.

### Roll-Out Protection

Provide a minimum 12-in. x 22-in. (305 x 559 mm) piece of sheet metal for flame roll-out protection in front of burner area for furnaces closer than 12-in. (305 mm) above the combustible deck or suspended furnaces closer than 12-in. (305 mm) to joists. The sheet metal MUST extend underneath the furnace casing by 1-in. (25 mm) with the door removed.

The bottom closure panel on furnaces of widths 17-1/2-in. (445 mm) and larger may be used for flame roll-out protection when bottom of furnace is used for return air connection. See Fig. 26 for proper orientation of roll-out shield.

### Supply Air Connections

For a furnace not equipped with a cooling coil, the outlet duct shall be provided with a removable access panel. This opening shall be accessible when the furnace is installed and shall be of such a size that the heat exchanger can be viewed for possible openings using light assistance or a probe can be inserted for sampling the air stream. The cover attachment shall prevent leaks.

Connect supply-air duct to flanges on furnace supply-air outlet. Bend flange upward to 90° with wide duct pliers. See Fig. 19. The supply-air duct must be connected to ONLY the furnace supply-outlet-air duct flanges or air conditioning coil casing (when used). **DO NOT** cut main furnace casing side to attach supply air duct, humidifier, or other accessories. All accessories MUST be connected to duct external to furnace main casing.

### Return Air Connections

The return-air duct may be connected to bottom of the furnace. The side of casing that faces downward may also be used for return air connection. A combination of the bottom and downward facing side may also be used. The upward facing side of the casing cannot be used as a return air connection. See Fig. 25.

**Bottom Return Air Inlet**

These furnaces are shipped with bottom closure panel installed in bottom return-air opening. Remove this panel when bottom return air is used. This panel may be used as a roll-out shield or discard. To remove bottom closure panel, perform the following:

1. Tilt or raise furnace and remove 4 screws holding bottom plate. See Fig. 21.
2. Remove bottom plate.
3. Remove bottom closure panel.
4. Reinstall bottom plate and screws.

**Side Return Air Inlet**

These furnaces are shipped with bottom closure panel installed in bottom return-air opening. This panel MUST be in place when side return air inlet(s) are used without a bottom return air inlet.

Not all horizontal furnaces are approved for side return air connections. See Fig. 25.

## Filter Arrangement

**⚠ WARNING**

**FIRE, CARBON MONOXIDE AND POISONING HAZARD**

Failure to follow this warning could result in fire, personal injury or death.

Never operate a furnace without a filter or filtration device installed. Never operate a furnace with filter or filtration device access doors removed.

There are no provisions for an internal filter rack in these furnaces. An external filter is required.

The furnace is shipped with a factory-supplied Media Filter Cabinet. The Media Filter Cabinet uses either a standard 1-in. (25 mm) filter or 4-in. (102 mm) wide Media Filter which can be purchased separately. A field supplied accessory air cleaner may also be used in place of the media cabinet.

The Media Cabinet is sized for bottom return applications for use in upflow, downflow and horizontal applications. A 16-inch (406 mm) Media Cabinet is shipped with the 14-3/16-in. (360 mm) furnace and includes block-off plates.

For upflow side return applications, the Media Cabinet (or field supplied accessory air cleaner) can be installed on the side of the furnace or side and bottom when a bottom plenum is used. See Fig. 17 and 23.

For downflow applications, the Media Cabinet (or field supplied accessory air cleaner) must only be connected to the bottom opening on the furnace. See Fig. 17 and 24.

For horizontal applications, the Media Cabinet (or field supplied accessory air cleaner) for all models can be connected to the bottom opening on the furnace. For side return use in the horizontal position, refer to Fig. 25. If both side and bottom openings are used in Fig. 25, each opening used will require a filter.

The media cabinet (or field supplied accessory air cleaner) can also be installed in the common return duct prior to entering the return air opening in any orientation.

Refer to the instructions supplied with Media Cabinet or accessory air filter for assembly and other details. See Table 7 for filter size details.

### Filter and Return Duct Sizing

Pressure drop must be taken into account when sizing filters, filter racks, IAQ devices, and associated system ductwork. See Table 5 for a comparison of Pressure Drop (initial/clean resistance to airflow) versus Airflow for a variety of filter media types and sizes. These are representative numbers. Consult the filter or IAQ device manufacturers' specification sheet for performance data for a particular filter media or IAQ device.

Design the filter and associated ductwork for the best match of pressure drop versus filter size. Best practice usually chooses filter systems with pressure drops under 0.2 in. W.C. (50 Pa), with the best blower electrical efficiency and system airflow performance occurring with filter pressure drops under 0.1 in. W.C. (25 Pa).

**NOTICE**

Design the duct system FIRST to determine how much pressure drop may be allowed in the filter system. See the Air Ducts section. Excessive filter pressure drop often compromises system airflow and duct performance, causes inadequate airflow to the furthest ends of the duct system, as well as causes excess noise and higher than anticipated electrical consumption.

Provide duct transitions, as required, to smoothly transition airflow from the return duct system to the filter (or IAQ device) to the furnace when the dimensions of the ductwork or furnace return air opening do not match the required filter or IAQ device dimensions. See the instructions supplied with factory-accessory duct adapters.

**Table 5 – Filter Media Pressure Drop (Clean) Versus Airflow - In. W.C. (Pa)**

| 14 x 25 Filter (356 x 635 mm) | | Factory-Accessory Washable | | Factory-Accessory Media* | | Representative After-Market Filter Media* | | | | | | | |
|---|---|---|---|---|---|---|---|---|---|---|---|---|---|
| | | | | | | Fiberglass* | | | | Pleated* | | | |
| CFM | L/s | (1-in. / 2.5 cm) | | (4-in. / 10 cm) | | (1-in. / 2.5 cm) | | (2-in. / 5 cm) | | (1-in. / 2.5 cm) | | (2-in. / 5 cm) | |
| 600 | (283) | 0.04 | (12) | 0.05 | (12) | 0.07 | (17) | 0.10 | (26) | 0.24 | (60) | 0.16 | (40) |
| 800 | (378) | 0.06 | (15) | 0.07 | (19) | 0.10 | (25) | 0.15 | (39) | 0.34 | (85) | 0.23 | (59) |
| 1000 | (472) | 0.07 | (18) | 0.10 | (27) | 0.13 | (34) | 0.21 | (52) | - | - | 0.32 | (81) |
| 1200 | (566) | 0.08 | (20) | 0.14 | (36) | 0.17 | (43) | 0.27 | (68) | - | - | - | - |
| **16 x 25 Filter (406 x 635 mm)** | | **Factory-Accessory Washable** | | **Factory-Accessory Media*** | | **Representative After-Market Filter Media*** | | | | | | | |
| | | | | | | **Fiberglass*** | | | | **Pleated*** | | | |
| **CFM** | **L/s** | **(1-in. / 2.5 cm)** | | **(4-in. / 10 cm)** | | **(1-in. / 2.5 cm)** | | **(2-in. / 5 cm)** | | **(1-in. / 2.5 cm)** | | **(2-in. / 5 cm)** | |
| 600 | (283) | 0.04 | (10) | 0.05 | (13) | 0.06 | (15) | 0.09 | (22) | 0.20 | (51) | 0.13 | (34) |
| 800 | (378) | 0.05 | (13) | 0.07 | (18) | 0.08 | (21) | 0.13 | (32) | 0.29 | (72) | 0.20 | (49) |
| 1000 | (472) | 0.06 | (16) | 0.11 | (28) | 0.11 | (28) | 0.17 | (43) | - | - | 0.27 | (67) |
| 1200 | (566) | 0.07 | (18) | 0.15 | (37) | 0.14 | (36) | 0.22 | (56) | - | - | - | - |
| 1400 | (661) | 0.08 | (21) | 0.19 | (48) | 0.18 | (45) | 0.28 | (70) | - | - | - | - |
| 1600 | (755) | 0.09 | (23) | 0.24 | (60) | 0.21 | (54) | - | - | - | - | - | - |
| 1800 | (850) | 0.10 | (25) | - | - | 0.26 | (64) | - | - | - | - | - | - |
| **20 x 25 Filter (508 x 635 mm)** | | **Factory-Accessory Washable** | | **Factory-Accessory Media*** | | **Representative After-Market Filter Media*** | | | | | | | |
| | | | | | | **Fiberglass*** | | | | **Pleated*** | | | |
| **CFM** | **(L/s)** | **(1-in. / 2.5 cm)** | | **(4-in. / 10 cm)** | | **(1-in. / 2.5 cm)** | | **(2-in. / 5 cm)** | | **(1-in. / 2.5 cm)** | | **(2-in. / 5 cm)** | |
| 800 | (378) | 0.04 | (11) | 0.05 | (12) | 0.06 | (16) | 0.09 | (24) | 0.22 | (55) | 0.15 | (37) |
| 1000 | (472) | 0.05 | (13) | 0.07 | (18) | 0.08 | (21) | 0.13 | (32) | 0.29 | (72) | 0.20 | (49) |
| 1200 | (566) | 0.06 | (15) | 0.09 | (22) | 0.11 | (27) | 0.16 | (41) | - | - | 0.25 | (63) |
| 1400 | (661) | 0.07 | (17) | 0.12 | (31) | 0.13 | (33) | 0.20 | (51) | - | - | 0.31 | (79) |
| 1600 | (755) | 0.08 | (19) | 0.15 | (38) | 0.16 | (40) | 0.24 | (61) | - | - | - | - |
| 1800 | (850) | 0.08 | (21) | 0.18 | (47) | 0.18 | (47) | 0.29 | (73) | - | - | - | - |
| 2000 | (944) | 0.09 | (23) | 0.22 | (56) | 0.21 | (54) | - | - | - | - | - | - |
| 2200 | (1038) | 0.09 | (24) | 0.26 | (66) | 0.25 | (62) | - | - | - | - | - | - |
| **25 x 25 Filter (635 x 635 mm)** | | **Factory-Accessory Washable** | | **Factory-Accessory Media*** | | **Representative After-Market Filter Media*** | | | | | | | |
| | | | | | | **Fiberglass*** | | | | **Pleated*** | | | |
| **CFM** | **L/s** | **(1-in. / 2.5 cm)** | | **(4-in. / 10 cm)** | | **(1-in. / 2.5 cm)** | | **(2-in. / 5 cm)** | | **(1-in. / 2.5 cm)** | | **(2-in. / 5 cm)** | |
| 800 | (378) | 0.03 | (9) | 0.03 | (8) | 0.05 | (12) | 0.07 | (18) | 0.17 | (43) | 0.11 | (28) |
| 1000 | (472) | 0.04 | (11) | 0.05 | (12) | 0.06 | (16) | 0.09 | (24) | 0.22 | (55) | 0.15 | (37) |
| 1200 | (566) | 0.05 | (13) | 0.07 | (17) | 0.08 | (20) | 0.12 | (31) | 0.27 | (68) | 0.18 | (47) |
| 1400 | (661) | 0.06 | (15) | 0.09 | (23) | 0.10 | (24) | 0.15 | (38) | - | - | 0.23 | (58) |
| 1600 | (755) | 0.06 | (16) | 0.12 | (31) | 0.11 | (29) | 0.18 | (45) | - | - | 0.28 | (69) |
| 1800 | (850) | 0.07 | (18) | 0.14 | (35) | 0.13 | (34) | 0.21 | (53) | - | - | - | - |
| 2000 | (944) | 0.08 | (19) | 0.16 | (41) | 0.16 | (39) | 0.24 | (61) | - | - | - | - |
| 2200 | (1038) | 0.08 | (21) | 0.19 | (49) | 0.18 | (45) | 0.28 | (70) | - | - | - | - |

If the filter size that you are looking for is not contained in Table 5, refer to Table 6 for a comparison of Pressure Drop (initial/clean resistance to airflow) versus Face Velocity for a variety of filter media types.

**The following equations relate Face Velocity (FPM), Filter Area and Airflow (CFM):**

Filter Face Velocity = Airflow / Filter Area

Minimum Filter Area = Rated System Airflow / Maximum Filter Face Velocity

**Table 6 – Filter Media Pressure Drop (Clean) Versus Face Velocity- In. W.C. (Pa)**

| Face Velocity | | Factory-Accessory Washable | | Representative After-Market Filter Media* | | | | | | | |
|---|---|---|---|---|---|---|---|---|---|---|---|
| | | | | Fiberglass* | | | | Pleated* | | | |
| FPM | (m/s) | (1-in. / 2.5 cm) | | (1-in. / 2.5 cm) | | (2-in. / 5 cm) | | (1-in. / 2.5 cm) | | (2-in. / 5 cm) | |
| 200 | (1) | 0.04 | (10) | 0.05 | (13) | 0.08 | (20) | 0.18 | (47) | 0.12 | (31) |
| 300 | (1.5) | 0.05 | (14) | 0.09 | (22) | 0.13 | (34) | 0.30 | (75) | 0.21 | (52) |
| 400 | (2) | 0.07 | (17) | 0.13 | (32) | 0.20 | (50) | - | - | 0.31 | (78) |
| 500 | (2.5) | 0.08 | (21) | 0.18 | (44) | 0.27 | (69) | - | - | - | - |
| 600 | (3) | 0.09 | (23) | 0.23 | - | - | - | - | - | - | - |
| 700 | (3.6) | 0.10 | (26) | 0.29 | - | - | - | - | - | - | - |

**Table 7 – Air Filter Selection and Duct Sizing - In. (mm)**

| FURNACE CASING WIDTH | FILTER SIZE | | FILTER TYPE |
|---|---|---|---|
| | SIDE RETURN | BOTTOM RETURN | |
| **17 – 1/2 (445)** | 16 x 25 x 3/4<br>(406 x 635 x 19) | 16 x 25 x 3/4<br>(406 x 635 x 19) | Washable* |
| **21 (533)** | 16 x 25 x 3/4<br>(406 x 635 x 19) | 20 x 25 x 3/4<br>(508 x 635 x 19) | Washable* |
| **24 – 1/2 (622)** | 16 x 25 x 3/4<br>(406 x 635 x 19) | 24 x 25 x 3/4<br>(610 x 635 x 19) | Washable* |

* Recommended to maintain air filter face velocity. See Product Data for part number.

**Air Filter Located in Filter Cabinet**

| FILTER CABINET HEIGHT – IN (MM) | FILTER SIZE – IN (MM) | FILTER TYPE |
|---|---|---|
| 16 (406) | (1) 16 x 25 x 3/4*<br>(406 x 635 x 19) or<br>(1) 16 x 25 x 4 – 5/16<br>(406 x 635 x 110) | Washable or Media* |
| 20 (508) | (1) 20 x 25 x 3/4*<br>(508 x 635 x 19) or<br>(1) 20 x 25 x 4 – 5/16<br>(508 x 635 x 110) | Washable or Media* |
| 24 (610) | (1) 24 x 25 x 3/4*or<br>(610 x 635 x 19) or<br>(1) 24 x 25 x 4 – 5/16<br>(610 x 635 x 110) | Washable or Media* |

* Filters with a side return – air may have a different filter size. Measure the filter to obtain the correct size.
* Recommended to maintain air filter face velocity. See Product Data for part number.

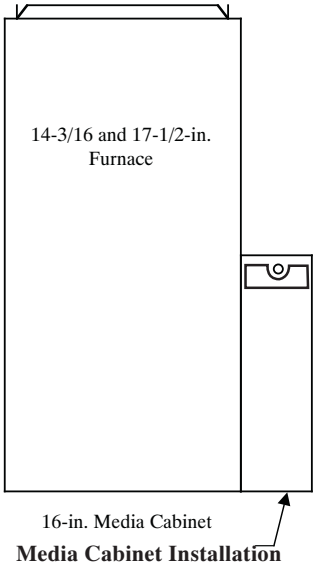


**Media Cabinet Installation Side Return**

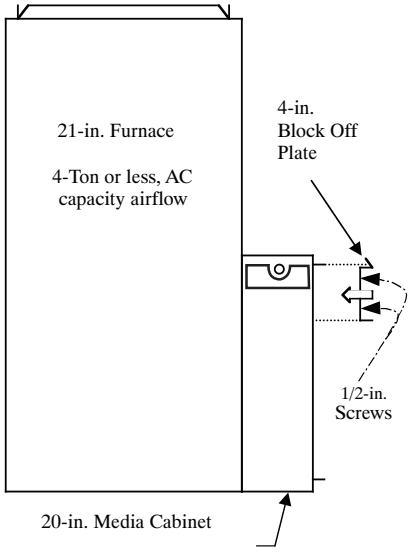


**Media Cabinet Installation Option for 4-Ton or Less A/C Capacity**

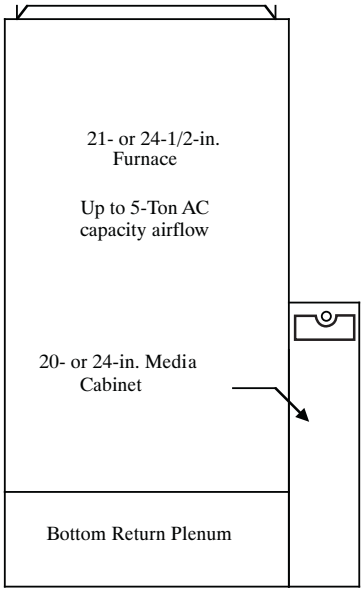


**20- or -24-in. Media Cabinet Installation for Combination Side and Bottom Return**

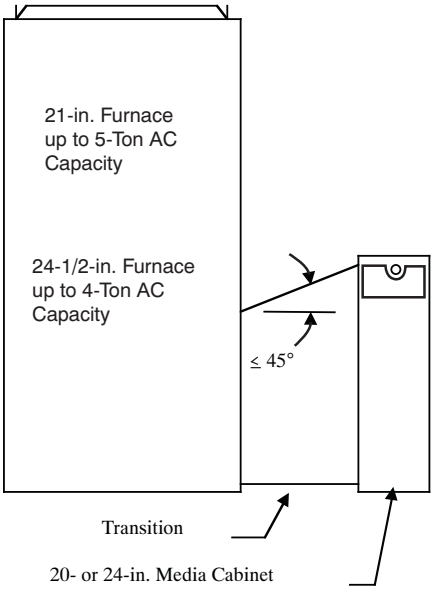


**20- or -24-in. Media Cabinet Installation with Angled Transition**

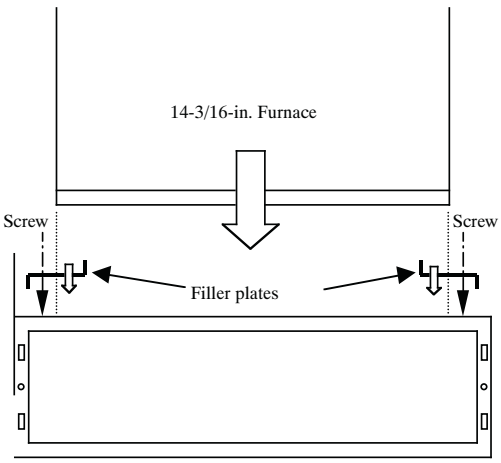


**14-3/16-in. Furnace with Filler Plates, Centered**

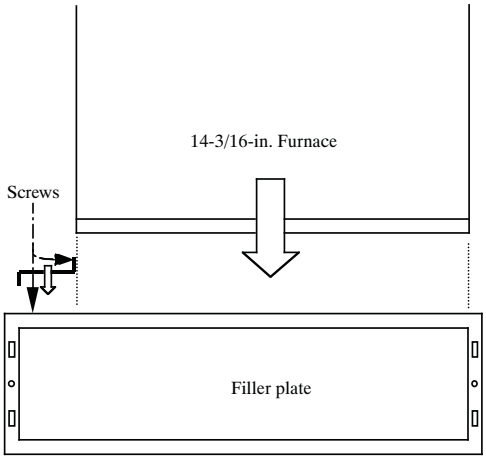


**14-3/16-in. Furnace with Filler Plates, Off-Set to Right**

A11437

**Fig. 17 - Media Filter**

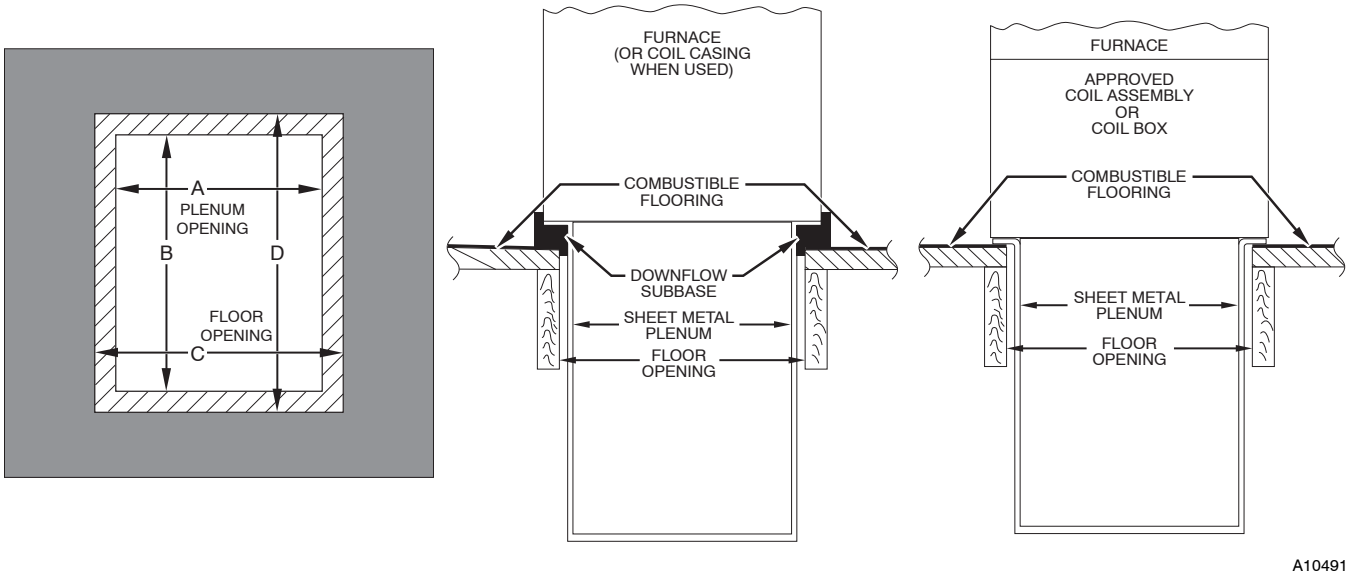


**Fig. 18 - Installation on Combustible Flooring**

**Table 8 – Opening Dimensions - In. (mm)**

| FURNACE CASING WIDTH IN. (mm) | APPLICATION | PLENUM OPENING | | FLOOR OPENING | |
|---|---|---|---|---|---|
| | | A | B | C | D |
| 17–1/2 (445) | Upflow Applications on Combustible or Noncombustible Flooring (KGASB subbase not required) | 16 (406) | 21–5/8 (549) | 16–5/8 (422) | 22–1/4 (565) |
| | Downflow Applications on Noncombustible Flooring (KGASB subbase not required) | 15–7/8 (403) | 19 (483) | 16–1/2 (419) | 19–5/8 (498) |
| | Downflow applications on combustible flooring (KGASB subbase required) | 15–1/8 (384) | 19 (483) | 16–3/4 (425) | 20–5/8 (600) |
| | Downflow Applications on Combustible Flooring with CNPV, CNRV, CAR or CAP Coil Assembly or KCAKC coil box (KGASB subbase not required) | 15–1/2 (394) | 19 (483) | 16–1/2 (419) | 20 (508) |
| 21 (533) | Upflow Applications on Combustible or Noncombustible Flooring (KGASB subbase not required) | 19–1/2 (495) | 21–5/8 (549) | 20–1/8 (511) | 22–1/4 (565) |
| | Downflow Applications on Noncombustible Flooring (KGASB subbase not required) | 19–3/8 (492) | 19 (483) | 20 (508) | 19–5/8 (498) |
| | Downflow applications on combustible flooring (KGASB subbase required) | 18–5/8 (473) | 19 (483) | 20–1/4 (514) | 20–5/8 (600) |
| | Downflow Applications on Combustible Flooring with CNPV, CNRV, CAR or CAP Coil Assembly or KCAKC coil box (KGASB subbase not required) | 19 (483) | 19 (483) | 20 (508) | 20 (508) |
| 24–1/2 (622) | Upflow Applications on Combustible or Noncombustible Flooring (KGASB subbase not required) | 23 (584) | 21–1/8 (537) | 23–5/8 (600) | 22–1/4 (565) |
| | Downflow Applications on Noncombustible Flooring (KGASB subbase not required) | 22–7/8 (581) | 19 (483) | 23–1/2 (597) | 19–5/8 (498) |
| | Downflow applications on Combustible flooring (KGASB subbase required) | 22–1/8 (562) | 19 (483) | 23–3/4 (603) | 20–5/8 (600) |
| | Downflow Applications on Combustible Flooring with CNPV, CNRV, CAR or CAP Coil Assembly or KCAKC coil box (KGASB subbase not required) | 22–1/2 (572) | 19 (483) | 23–1/2 (597) | 20 (508) |

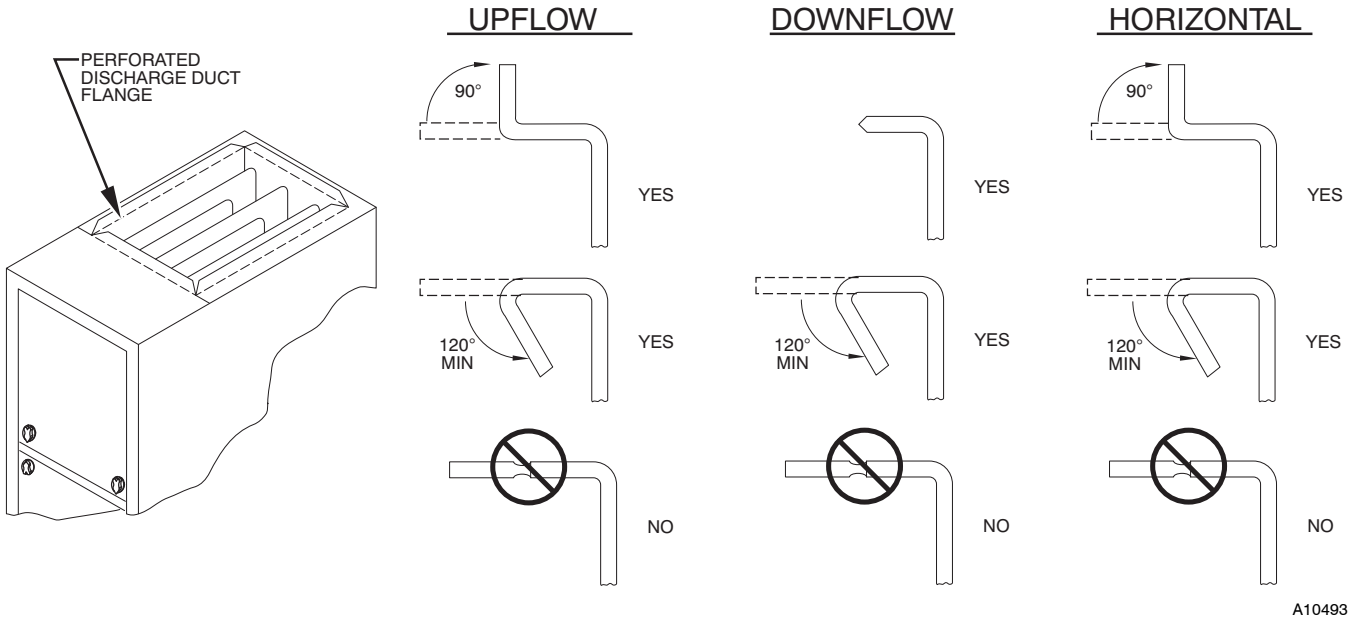


**Fig. 19 - Duct Flanges**

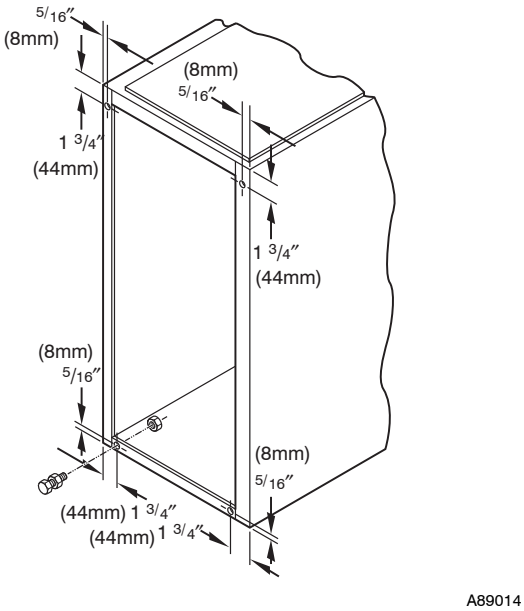


**Fig. 20 - Leveling Legs**

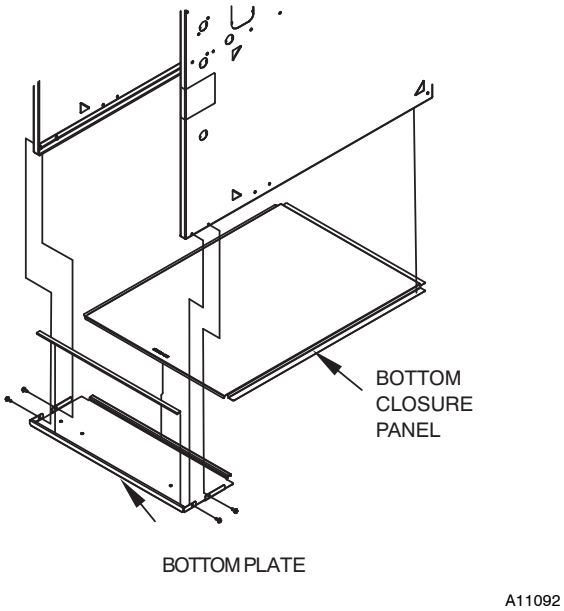


**Fig. 21 - Removing Bottom Closure Panel**

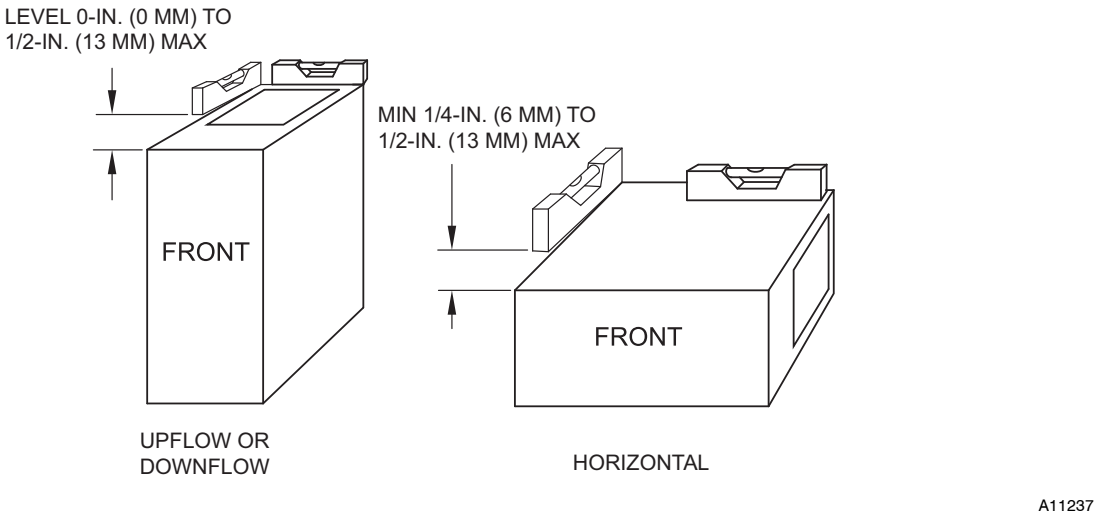


**Fig. 22 - Furnace Pitch Requirements**

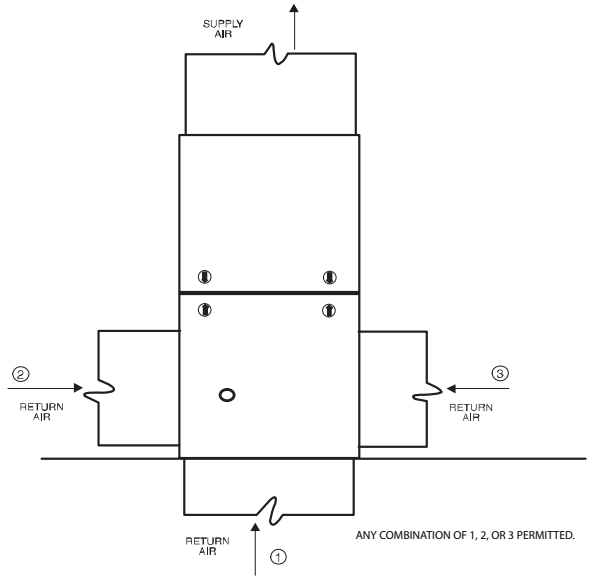


**Fig. 23 - Upflow Return Air Configurations and Restrictions**

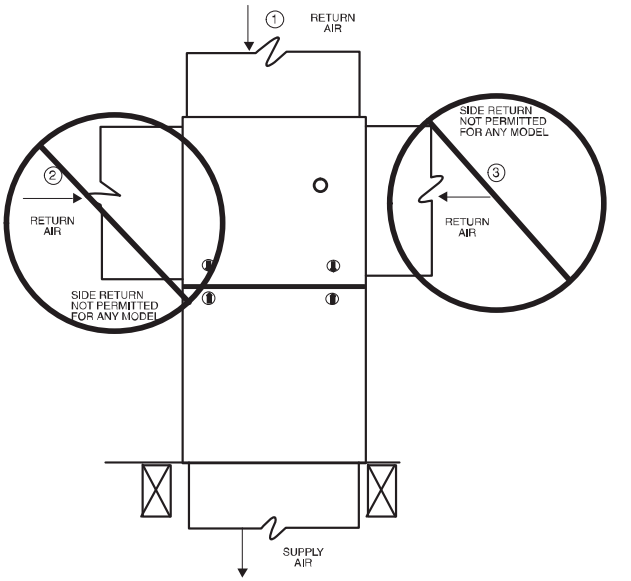


**Fig. 24 - Downflow Return Air Configurations and Restrictions**

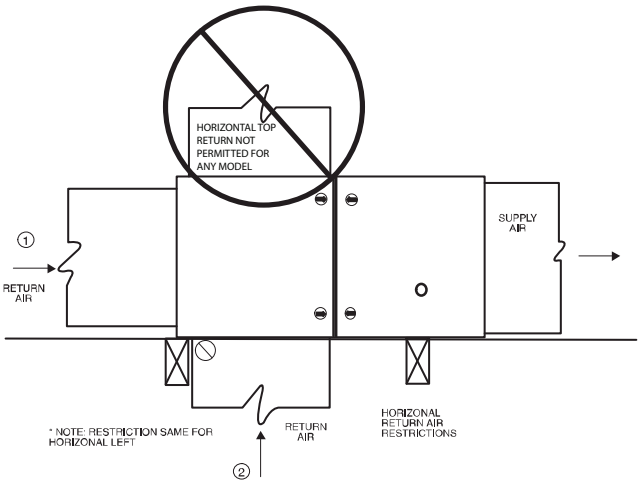


**Fig. 25 - Horizontal Return Air Configurations and Restrictions**

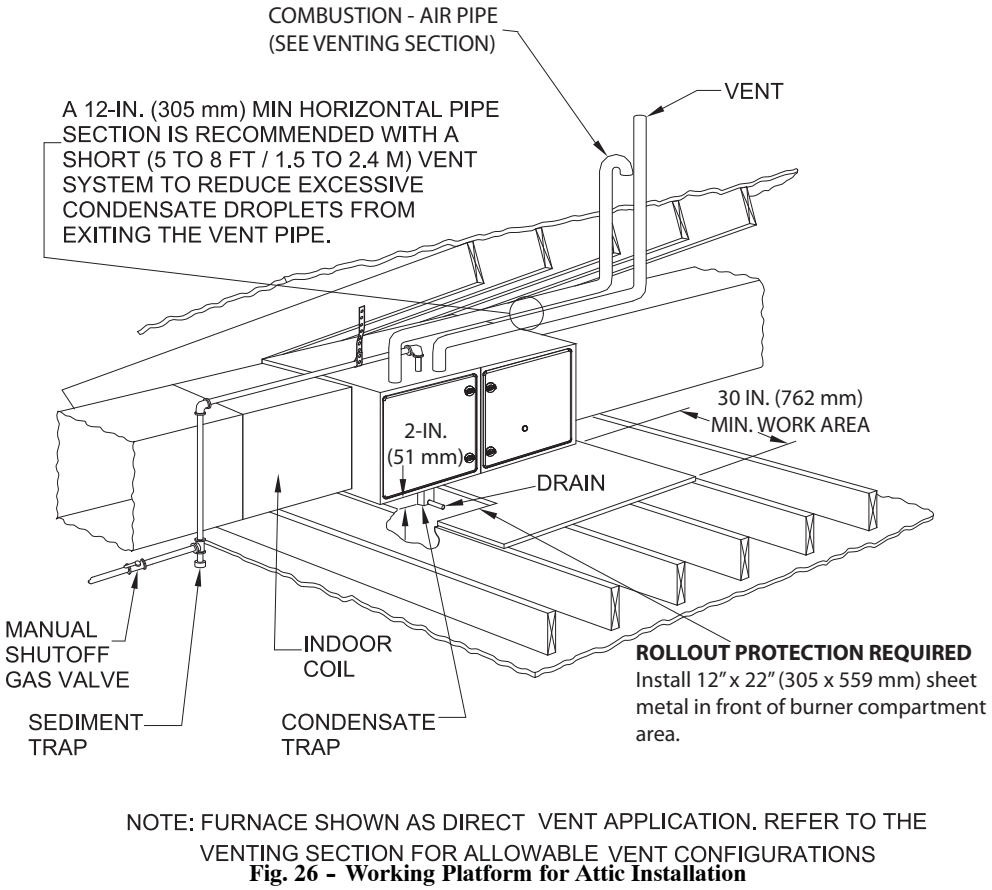


**Fig. 26 – Working Platform for Attic Installation**

**NOTE: Local codes may require a drain pan and condensate trap when a condensing furnace is installed over a finished ceiling.**

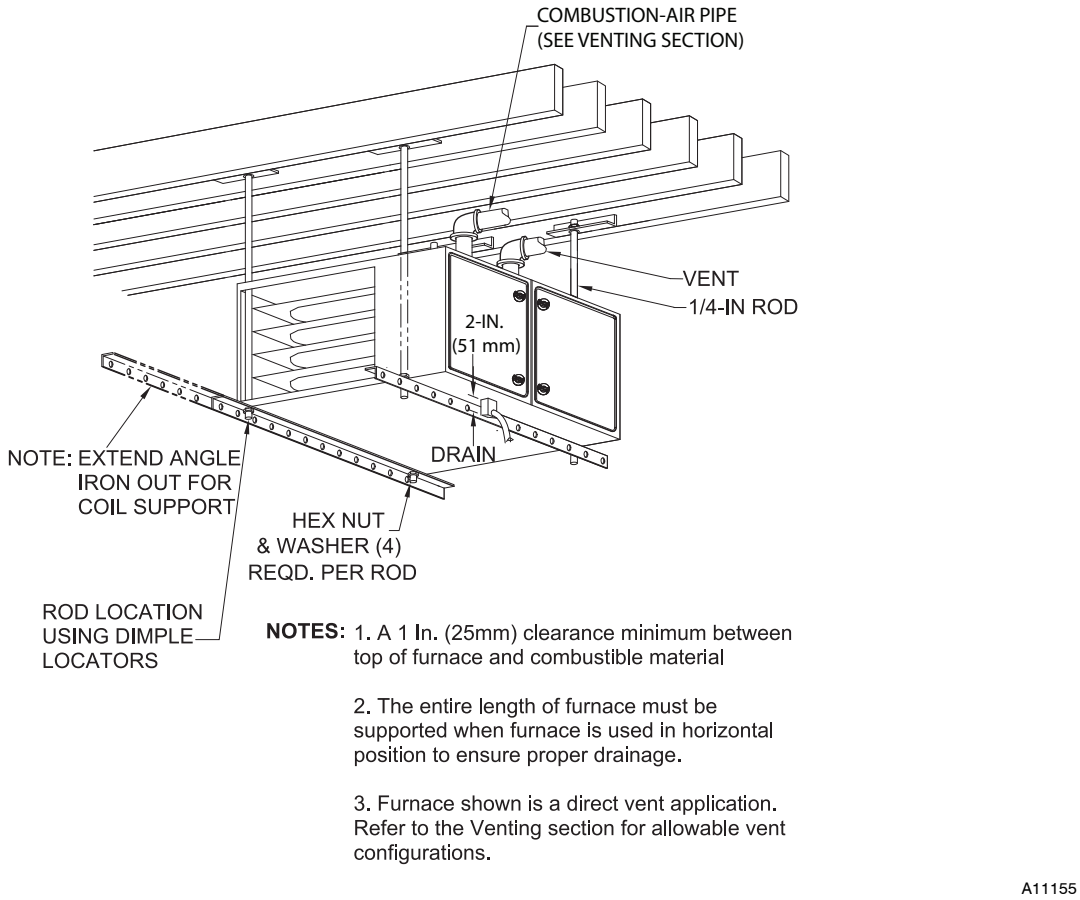


**Fig. 27 – Suspended Furnace Installation**

**NOTE: Local codes may require a drain pan and condensate trap when a condensing furnace is installed over a finished ceiling.**

# AIR DUCTS

## NOTICE

Many states, provinces and localities are considering or have implemented standards and/or restrictions on duct sizing practices, ductwork leakage, and/or ductwork thermal, airflow and electrical efficiencies. CONSULT LOCAL CODE OFFICIALS for ductwork design and performance requirements in your area.

## General Requirements

The duct system should be designed and sized according to accepted national standards such as those published by: Air Conditioning Contractors Association (ACCA Manual D) , Sheet Metal and Air Conditioning Contractors National Association (SMACNA) or American Society of Heating, Refrigerating and Air Conditioning Engineers (ASHRAE) or consult *The Air Systems Design Guidelines* reference tables available from your local distributor. The duct system should be sized to handle the required system design CFM at the design external static pressure. The furnace airflow rates are provided in Table 9-Air Delivery-CFM (With Filter). When a furnace is installed so that the supply ducts carry air circulated by the furnace to areas outside the space containing the furnace, the return air shall also be handled by duct(s) sealed to the furnace casing and terminating outside the space containing the furnace.

Secure ductwork with proper fasteners for type of ductwork used. Seal supply- and return-duct connections to furnace with code approved tape or duct sealer.

**NOTE**: Flexible connections should be used between ductwork and furnace to prevent transmission of vibration.

Ductwork passing through unconditioned space should be insulated to enhance system performance. When air conditioning is used, a vapor barrier is recommended.

Maintain a 1-in. (25 mm) clearance from combustible materials to supply air ductwork for a distance of 36-in. (914 mm) horizontally from the furnace. See NFPA 90B or local code for further requirements.

## Return Duct Sizing

Refer to the Filter Selection and Duct Sizing section for information on the proper selection of filter sizes and the associated ductwork and duct transitions. Improperly designed filtering systems and return ductwork are the most common causes of airflow and/or noise complaints in HVAC systems.

## Ductwork Acoustical Treatment

**NOTE**: Metal duct systems that do not have a 90 degree elbow and 10 ft. (3 M) of main duct to the first branch take-off may require internal acoustical lining. As an alternative, fibrous ductwork may be used if constructed and installed in accordance with the latest edition of SMACNA construction standard on fibrous glass ducts. Both acoustical lining and fibrous ductwork shall comply with NFPA 90B as tested by UL Standard 181 for Class 1 Rigid air ducts.

**NOTE**: For horizontal applications, the top most flange may be bent past 90° to allow the evaporator coil to hang on the flange temporarily while the remaining attachment and sealing of the coil are performed.

**Table 9 – Cooling[4] and Heating Air Delivery - CFM (Bottom Return[5] With Filter)**

(SW1-5 and SW4-3 set to OFF, except as indicated. See notes 1 and 2)

| Unit Size | Clg/CF Switch Settings | | | External Static Pressure (ESP) | | | | | | | | | |
|---|---|---|---|---|---|---|---|---|---|---|---|---|---|
| | SWx-3 | SWx-2 | SWx-1 | 0.1 | 0.2 | 0.3 | 0.4 | 0.5 | 0.6 | 0.7 | 0.8 | 0.9 | 1.0 |
| **42060** | | | | | | | | | | | | | |
| *Clg Default:* | OFF | OFF | OFF | 1060 | 1070 | 1080 | 1080 | 1075 | 1065 | 1050 | 1035 | 1025 | 1010 |
| *CF Default:* | OFF | OFF | OFF | 545 | 530 | 520 | 525 | 510 | See note 4 | | | | |
| *Cooling (SW2)* *Cont Fan (SW3)* | OFF | OFF | ON | 545 | 530 | 520 | 525 | 510 | See note 4 | | | | |
| | OFF | ON | OFF | 710 | 710 | 710 | 695 | 690 | See note 4 | | | | |
| | OFF | ON | ON | 875 | 880 | 890 | 895 | 895 | 890 | 885 | 880 | 870 | 855 |
| | ON | OFF | OFF | 1060 | 1070 | 1080 | 1080 | 1075 | 1065 | 1050 | 1035 | 1025 | 1010 |
| | ON | OFF | ON | 1235 | 1240 | 1250 | 1255 | 1255 | 1250 | 1230 | 1190 | 1155 | 1115 |
| | ON | ON | OFF | 1235 | 1240 | 1250 | 1255 | 1255 | 1250 | 1230 | 1190 | 1155 | 1115 |
| | ON | ON | ON | 1235 | 1240 | 1250 | 1255 | 1255 | 1250 | 1230 | 1190 | 1155 | 1115 |
| *Clg SW2:* | Maximum Clg Airflow [2] | | | 1425 | 1425 | 1405 | 1370 | 1335 | 1300 | 1260 | 1225 | 1190 | 1155 |
| *Heating (SW1)* | Maximum Heat Airflow [3] | | | 1075 | 1085 | 1095 | 1095 | 1090 | 1080 | 1065 | 1050 | 1035 | 1020 |
| | Intermediate Heat Airflow [3] | | | 535 | 515 | 505 | 515 | 495 | See note 4 | | | | |
| | Minimum Heat Airflow [3] | | | 420 | 410 | 415 | 400 | 380 | See note 4 | | | | |
| **Unit Size** | **Clg/CF Switch Settings** | | | **External Static Pressure (ESP)** | | | | | | | | | |
| | SWx-3 | SWx-2 | SWx-1 | 0.1 | 0.2 | 0.3 | 0.4 | 0.5 | 0.6 | 0.7 | 0.8 | 0.9 | 1.0 |
| **60060** | | | | | | | | | | | | | |
| *Clg Default:* | OFF | OFF | OFF | 1735 | 1735 | 1725 | 1715 | 1700 | 1685 | 1665 | 1650 | 1625 | 1605 |
| *CF Default:* | OFF | OFF | OFF | 545 | 530 | 520 | 525 | 510 | See note 4 | | | | |
| *Cooling (SW2)* *Cont Fan (SW3)* | OFF | OFF | ON | 540 | 525 | 525 | 520 | 540 | See note 4 | | | | |
| | OFF | ON | OFF | 680 | 725 | 725 | 720 | 720 | See note 4 | | | | |
| | OFF | ON | ON | 925 | 915 | 910 | 895 | 900 | 890 | 875 | 865 | 860 | 855 |
| | ON | OFF | OFF | 1070 | 1075 | 1080 | 1070 | 1080 | 1075 | 1055 | 1045 | 1030 | 1020 |
| | ON | OFF | ON | 1215 | 1245 | 1235 | 1220 | 1220 | 1210 | 1200 | 1195 | 1185 | 1175 |
| | ON | ON | OFF | 1380 | 1385 | 1395 | 1390 | 1395 | 1390 | 1380 | 1365 | 1355 | 1340 |
| | ON | ON | ON | 1735 | 1735 | 1725 | 1715 | 1700 | 1685 | 1665 | 1650 | 1625 | 1605 |
| *Clg SW2:* | Maximum Clg Airflow [2] | | | 1955 | 1950 | 1940 | 1925 | 1905 | 1885 | 1855 | 1815 | 1745 | 1685 |
| *Heating (SW1)* | Maximum Heat Airflow [3] | | | 1080 | 1085 | 1095 | 1090 | 1095 | 1085 | 1070 | 1055 | 1045 | 1030 |
| | Intermediate Heat Airflow [3] | | | 685 | 725 | 730 | 725 | 730 | See note 4 | | | | |
| | Minimum Heat Airflow [3] | | | 560 | 555 | 555 | 550 | 565 | See note 4 | | | | |

**NOTE**: See notes at end of table.

**Table 9 - Cooling[4] and Heating Air Delivery - CFM (Bottom Return[5] With Filter) (Continued)**

| Unit Size | Clg/CF Switch Settings | | | External Static Pressure (ESP) | | | | | | | | | |
|---|---|---|---|---|---|---|---|---|---|---|---|---|---|
| | SWx-3 | SWx-2 | SWx-1 | 0.1 | 0.2 | 0.3 | 0.4 | 0.5 | 0.6 | 0.7 | 0.8 | 0.9 | 1.0 |
| **42080** | | | | | | | | | | | | | |
| *Clg Default:* | OFF | OFF | OFF | 1055 | 1065 | 1080 | 1075 | 1065 | 1050 | 1045 | 1035 | 1025 | 1005 |
| *CF Default:* | OFF | OFF | OFF | 520 | 505 | 505 | 495 | 490 | See note 4 | | | | |
| *Cooling (SW2)* *Cont Fan (SW3)* | OFF | OFF | ON | 520 | 505 | 505 | 495 | 490 | See note 4 | | | | |
| | OFF | ON | OFF | 665 | 685 | 680 | 660 | 665 | See note 4 | | | | |
| | OFF | ON | ON | 885 | 895 | 905 | 900 | 900 | 895 | 885 | 875 | 860 | 845 |
| | ON | OFF | OFF | 1055 | 1065 | 1080 | 1075 | 1065 | 1050 | 1045 | 1035 | 1025 | 1005 |
| | ON | OFF | ON | 1245 | 1245 | 1255 | 1255 | 1260 | 1255 | 1250 | 1235 | 1220 | 1185 |
| | ON | ON | OFF | 1245 | 1245 | 1255 | 1255 | 1260 | 1255 | 1250 | 1235 | 1220 | 1185 |
| | ON | ON | ON | 1245 | 1245 | 1255 | 1255 | 1260 | 1255 | 1250 | 1235 | 1220 | 1185 |
| *Clg SW2:* | Maximum Clg Airflow [2] | | | 1520 | 1485 | 1450 | 1415 | 1375 | 1335 | 1300 | 1265 | 1225 | 1190 |
| *Heating (SW1)* | Maximum Heat Airflow [3] | | | 1520 | 1485 | 1450 | 1415 | 1375 | 1335 | 1300 | 1265 | 1225 | 1190 |
| | Intermediate Heat Airflow [3] | | | 755 | 745 | 755 | 755 | 765 | See note 4 | | | | |
| | Minimum Heat Airflow [3] | | | 620 | 625 | 630 | 620 | 610 | See note 4 | | | | |
| **Unit Size** | **Clg/CF Switch Settings** | | | **External Static Pressure (ESP)** | | | | | | | | | |
| | SWx-3 | SWx-2 | SWx-1 | 0.1 | 0.2 | 0.3 | 0.4 | 0.5 | 0.6 | 0.7 | 0.8 | 0.9 | 1.0 |
| **60080** | | | | | | | | | | | | | |
| *Clg Default:* | OFF | OFF | OFF | 1745 | 1755 | 1755 | 1760 | 1755 | 1750 | 1745 | 1725 | 1705 | 1685 |
| *CF Default:* | OFF | OFF | OFF | 700 | 710 | 750 | 725 | 750 | See note 4 | | | | |
| *Cooling (SW2)* *Cont Fan (SW3)* | OFF | OFF | ON | 700 | 710 | 750 | 725 | 750 | See note 4 | | | | |
| | OFF | ON | OFF | 830 | 860 | 870 | 890 | 960 | See note 4 | | | | |
| | OFF | ON | ON | 1045 | 1045 | 1060 | 1070 | 1070 | 1070 | 1095 | 1090 | 1080 | 1070 |
| | ON | OFF | OFF | 1215 | 1220 | 1245 | 1240 | 1235 | 1235 | 1225 | 1220 | 1235 | 1235 |
| | ON | OFF | ON | 1370 | 1370 | 1390 | 1390 | 1400 | 1395 | 1400 | 1390 | 1390 | 1385 |
| | ON | ON | OFF | 1745 | 1755 | 1755 | 1760 | 1755 | 1750 | 1745 | 1725 | 1705 | 1685 |
| | ON | ON | ON | 1745 | 1755 | 1755 | 1760 | 1755 | 1750 | 1745 | 1725 | 1705 | 1685 |
| *Clg SW2:* | Maximum Clg Airflow [2] | | | 1920 | 1920 | 1945 | 1945 | 1945 | 1960 | 1950 | 1940 | 1915 | 1900 |
| *Heating (SW1)* | Maximum Heat Airflow [3] | | | 1340 | 1355 | 1370 | 1385 | 1380 | 1385 | 1400 | 1400 | 1385 | 1380 |
| | Intermediate Heat Airflow [3] | | | 780 | 810 | 835 | 840 | 845 | See note 4 | | | | |
| | Minimum Heat Airflow [3] | | | 595 | 595 | 600 | 595 | 605 | See note 4 | | | | |

**NOTE**: See notes at end of table.

**Table 9 - Cooling[4] and Heating Air Delivery - CFM (Bottom Return[5] With Filter) (Continued)**

| Unit Size | Clg/CF Switch Settings | | | External Static Pressure (ESP) | | | | | | | | | |
|---|---|---|---|---|---|---|---|---|---|---|---|---|---|
| | SWx-3 | SWx-2 | SWx-1 | 0.1 | 0.2 | 0.3 | 0.4 | 0.5 | 0.6 | 0.7 | 0.8 | 0.9 | 1.0 |
| **66100** | | | | | | | | | | | | | |
| *Clg Default:* | OFF | OFF | OFF | 1820 | 1825 | 1840 | 1845 | 1840 | 1835 | 1825 | 1805 | 1780 | 1770 |
| *CF Default:* | OFF | OFF | OFF | 750 | 740 | 745 | 730 | 715 | See note 4 | | | | |
| *Cooling (SW2) Cont Fan (SW3)* | OFF | OFF | ON | 750 | 740 | 745 | 730 | 715 | See note 4 | | | | |
| | OFF | ON | OFF | 900 | 900 | 915 | 910 | 905 | See note 4 | | | | |
| | OFF | ON | ON | 1070 | 1075 | 1095 | 1095 | 1090 | 1085 | 1095 | 1080 | 1065 | 1070 |
| | ON | OFF | OFF | 1280 | 1285 | 1305 | 1305 | 1310 | 1305 | 1295 | 1300 | 1290 | 1285 |
| | ON | OFF | ON | 1440 | 1445 | 1465 | 1465 | 1470 | 1485 | 1480 | 1485 | 1475 | 1460 |
| | ON | ON | OFF | 1820 | 1825 | 1840 | 1845 | 1840 | 1835 | 1825 | 1805 | 1780 | 1770 |
| | ON | ON | ON | 2135 | 2140 | 2140 | 2135 | 2140 | 2130 | 2115 | 2100 | 2070 | 2015 |
| *Clg SW2:* | Maximum Clg Airflow [2] | | | 2160 | 2165 | 2175 | 2170 | 2160 | 2150 | 2135 | 2120 | 2065 | 2020 |
| *Heating (SW1)* | Maximum Heat Airflow [3] | | | 1570 | 1575 | 1595 | 1595 | 1600 | 1605 | 1600 | 1600 | 1590 | 1575 |
| | Intermediate Heat Airflow [3] | | | 950 | 955 | 965 | 975 | 970 | See note 4 | | | | |
| | Minimum Heat Airflow [3] | | | 755 | 745 | 750 | 735 | 720 | See note 4 | | | | |
| **Unit Size** | **Clg/CF Switch Settings** | | | **External Static Pressure (ESP)** | | | | | | | | | |
| | SWx-3 | SWx-2 | SWx-1 | 0.1 | 0.2 | 0.3 | 0.4 | 0.5 | 0.6 | 0.7 | 0.8 | 0.9 | 1.0 |
| **66120** | | | | | | | | | | | | | |
| *Clg Default:* | OFF | OFF | OFF | 1850 | 1855 | 1860 | 1855 | 1850 | 1830 | 1805 | 1775 | 1750 | 1730 |
| *CF Default:* | OFF | OFF | OFF | 930 | 925 | 915 | 900 | 885 | See note 4 | | | | |
| *Cooling (SW2) Cont Fan (SW3)* | OFF | OFF | ON | 765 | 745 | 740 | 705 | 680 | See note 4 | | | | |
| | OFF | ON | OFF | 930 | 925 | 915 | 900 | 885 | See note 4 | | | | |
| | OFF | ON | ON | 1095 | 1100 | 1110 | 1105 | 1085 | See note 4 | | | | |
| | ON | OFF | OFF | 1265 | 1255 | 1265 | 1280 | 1275 | 1285 | 1270 | 1260 | 1250 | 1230 |
| | ON | OFF | ON | 1465 | 1455 | 1470 | 1465 | 1465 | 1470 | 1455 | 1450 | 1435 | 1415 |
| | ON | ON | OFF | 1850 | 1855 | 1860 | 1855 | 1850 | 1830 | 1805 | 1775 | 1750 | 1730 |
| | ON | ON | ON | 2200 | 2200 | 2200 | 2190 | 2185 | 2170 | 2145 | 2085 | 1990 | 1890 |
| *Clg SW2:* | Maximum Clg Airflow [2] | | | 2200 | 2200 | 2200 | 2190 | 2185 | 2170 | 2145 | 2085 | 1990 | 1890 |
| *Heating (SW1)* | Maximum Heat Airflow [3] | | | 1815 | 1820 | 1825 | 1820 | 1815 | 1795 | 1775 | 1745 | 1720 | 1700 |
| | Intermediate Heat Airflow [3] | | | 1095 | 1100 | 1110 | 1105 | 1085 | See note 4 | | | | |
| | Minimum Heat Airflow [3] | | | 905 | 900 | 890 | 875 | 855 | See note 4 | | | | |

1. Nominal 350 CFM/ton cooling airflow is delivered with SW1-5 and SW4-3 set to OFF.
   Set SW1-5 to ON for nominal 400 CFM/ton (+15% airflow).
   Set SW4-3 to ON for nominal 325 CFM/ton (-7% airflow).
   Set both SW1-5 and SW4-3 to ON for nominal 370 CFM/ton (+7% airflow).
   The above adjustments in airflow are subject to motor horsepower range/capacity.
2. Maximum cooling airflow is achieved when switches SW2-1, SW2-2, SW2-3 and SW1-5 are set to ON, and SW4-3 is set to OFF.
3. All heating CFM's are when low/medium heat rise adjustment switch (SW1-3) and comfort/efficiency adjustment switch (SW1-4) are both set to OFF.
4. Ductwork must be sized for high-heating CFM within the operational range of ESP. Operation within the blank areas of the chart is not recommended because high-heat operation will be above 1.0 ESP.
5. All airflows on 21" casing size furnaces are 5% less on side return only installations.
6. Return air above 1800 CFM on 24.5" casing sizes requires two sides, one side and bottom or bottom only , to allow sufficient airflow to the furnace.

## GAS PIPING

**⚠ WARNING**

**FIRE OR EXPLOSION HAZARD**

Failure to follow this warning could result in personal injury, death, and/or property damage.

Never purge a gas line into a combustion chamber. Never test for gas leaks with an open flame. Use a commercially available soap solution made specifically for the detection of leaks to check all connections. A fire or explosion may result causing property damage, personal injury or loss of life.

**⚠ WARNING**

**FIRE OR EXPLOSION HAZARD**

Failure to follow this warning could result in personal injury, death, and/or property damage.

Use proper length of pipe to avoid stress on gas control manifold and gas valve.

**⚠ WARNING**

**FIRE OR EXPLOSION HAZARD**

Failure to follow this warning could result in personal injury, death, and/or property damage.

Gas valve inlet and/or inlet pipe must remain capped until gas supply line is permanently installed to protect the valve from moisture and debris. Also, install a sediment trap in the gas supply piping at the inlet to the gas valve.

Gas piping must be installed in accordance with national and local codes. Refer to current edition of NFGC in the U.S.A. Refer to current edition of NSCNGPIC in Canada.

Installations must be made in accordance with all authorities having jurisdiction. If possible, the gas supply line should be a separate line running directly from meter to furnace.

**NOTE**: Use a back-up wrench on the inlet of the gas valve when connecting the gas line to the gas valve.

**NOTICE**

**In the State of Massachusetts:**

1. Gas supply connections MUST be performed by a licensed plumber or gas fitter.
2. When flexible connectors are used, the maximum length shall not exceed 36 in. (915 mm).
3. When lever handle type manual equipment shutoff valves are used, they shall be T-handle valves.
4. The use of copper tubing for gas piping is NOT approved by the State of Massachusetts.

Refer to Table 10 for recommended gas pipe sizing. Risers must be used to connect to furnace and to meter. Support all gas piping with appropriate straps, hangers, etc. Use a minimum of one hanger every 6 ft. (2 M). Joint compound (pipe dope) should be applied sparingly and only to male threads of joints. Pipe dope must be resistant to the action of propane gas.

**⚠ WARNING**

**FIRE OR EXPLOSION HAZARD**

A failure to follow this warning could result in personal injury, death, and/or property damage.

If local codes allow the use of a flexible gas appliance connector, always use a new listed connector. Do not use a connector which has previously served another gas appliance. Black iron pipe shall be installed at the furnace gas control valve and extend a minimum of 2-in. (51 mm) outside the furnace.

**⚠ CAUTION**

**FURNACE DAMAGE HAZARD**

Failure to follow this caution may result in furnace damage.

Connect gas pipe to furnace using a backup wrench to avoid damaging gas controls and burner misalignment.

An accessible manual equipment shutoff valve MUST be installed external to furnace casing and within 6 ft. (2 M) of furnace.

Install a sediment trap in riser leading to furnace as shown in Fig. 29. Connect a capped nipple into lower end of tee. Capped nipple should extend below level of furnace gas controls. Place a ground joint union between furnace gas control valve and exterior manual equipment gas shutoff valve.

A 1/8-in. (3 mm) NPT plugged tapping, accessible for test gauge connection, MUST be installed immediately upstream of gas supply connection to furnace and downstream of manual equipment shutoff valve.

Piping should be pressure and leak tested in accordance with the current addition of the NFGC in the United States, local, and national plumbing and gas codes before the furnace has been connected. Refer to current edition of NSCNGPIC in Canada. After all connections have been made, purge lines and check for leakage at furnace prior to operating furnace.

**NOTE**: The furnace gas control valve inlet pressure tap connection is suitable to use as test gauge connection providing test pressure DOES NOT exceed maximum 0.5 psig (14-In. W.C.) stated on gas control valve. See Fig. 52.

If pressure exceeds 0.5 psig (14-In. W.C.), gas supply pipe must be disconnected from furnace and capped before and during supply pipe pressure test. If test pressure is equal to or less than 0.5 psig (14-In. W.C.), turn off electric shutoff switch located on furnace gas control valve and accessible manual equipment shutoff valve before and during supply pipe pressure test. After all connections have been made, purge lines and check for leakage at furnace prior to operating furnace.

The gas supply pressure shall be within the maximum and minimum inlet supply pressures marked on the rating plate with the furnace burners ON and OFF.

Some installations require gas entry on right side of furnace (as viewed in upflow). See Fig. 28.

### Gas Pipe Grommet

For direct vent (2-pipe) applications, the knockout for the gas pipe must be sealed to prevent air leakage. Remove the knockout, install the grommet in the knockout, then insert the gas pipe. The grommet is included in the loose parts bag. See Fig. 28.

**Table 10 – Maximum Capacity of Pipe**

| NOMINAL IRON PIPE SIZE IN. (MM) | LENGTH OF PIPE – FT (M) | | | | |
|---|---|---|---|---|---|
| | 10 (3.0) | 20 (6.0) | 30 (9.1) | 40 (12.1) | 50 (15.2) |
| 1/2 (13) | 175 | 120 | 97 | 82 | 73 |
| 3/4 (19) | 360 | 250 | 200 | 170 | 151 |
| 1 ( 25) | 680 | 465 | 375 | 320 | 285 |
| 1-1/4 (32) | 1400 | 950 | 770 | 660 | 580 |
| 1-1/2 (39) | 2100 | 1460 | 1180 | 990 | 900 |

* Cubic ft of gas per hr for gas pressures of 0.5 psig (14–In. W.C.) or less and a pressure drop of 0.5–In. W.C. (based on a 0.60 specific gravity gas). Ref: Table 10 above and 6.2 of NFPA54/ANSI Z223.1–2009.

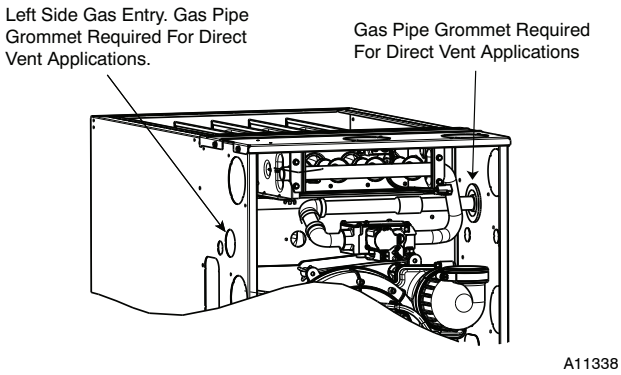


**Fig. 28 - Gas Entry**

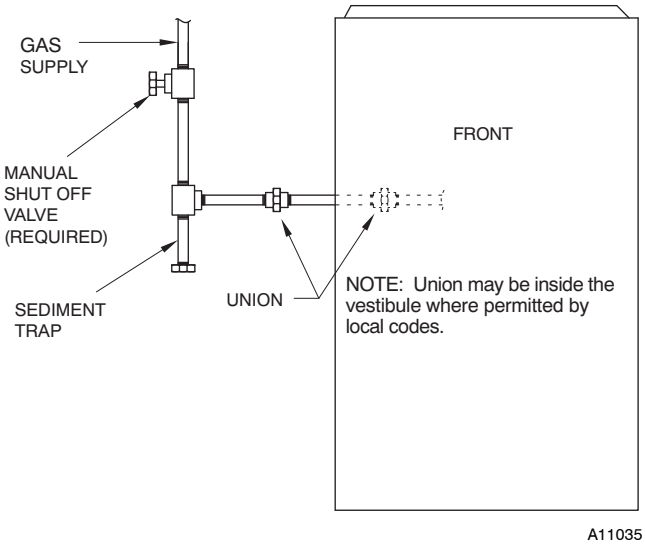


**Fig. 29 - Typical Gas Pipe Arrangement**

## ELECTRICAL CONNECTIONS

**⚠ WARNING**

**ELECTRICAL SHOCK HAZARD**

Failure to follow this warning could result in personal injury or death.

Blower door switch opens 115-v power to control. No component operation can occur. Do not bypass or close switch with blower door removed.

See Fig. 33 for field wiring diagram showing typical field 115-v wiring. Check all factory and field electrical connections for tightness.

Field-supplied wiring shall conform with the limitations of 63°F (33°C) rise.

**⚠ WARNING**

**ELECTRICAL SHOCK AND FIRE HAZARD**

Failure to follow this warning could result in personal injury, death, or property damage.

The cabinet MUST have an uninterrupted or unbroken ground according to NEC ANSI/NFPA 70-2011 or local codes to minimize personal injury if an electrical fault should occur. In Canada, refer to Canadian Electrical Code CSA C22.1. This may consist of electrical wire, conduit approved for electrical ground or a listed, grounded power cord (where permitted by local code) when installed in accordance with existing electrical codes. Refer to the power cord manufacturer's ratings for proper wire gauge. Do not use gas piping as an electrical ground.

**⚠ CAUTION**

**FURNACE MAY NOT OPERATE HAZARD**

Failure to follow this caution may result in intermittent furnace operation.

Furnace control must be grounded for proper operation or else control will lock out. Control must remain grounded through green/yellow wire routed to gas valve and manifold bracket screw.

### 115-V Wiring

Furnace must have a 115-v power supply properly connected and grounded.

**NOTE**: Proper polarity must be maintained for 115-v wiring. If polarity is incorrect, control LED status indicator light will flash rapidly and furnace will **NOT** operate.

Verify that the voltage, frequency, and phase correspond to that specified on unit rating plate. Also, check to be sure that service provided by utility is sufficient to handle load imposed by this equipment. Refer to rating plate or Table 11 for equipment electrical specifications.

**U.S.A. Installations**: Make all electrical connections in accordance with the current edition of the National Electrical Code (NEC) ANSI/NFPA 70 and any local codes or ordinances that might apply.

**Canada Installations**: Make all electrical connections in accordance with the current edition of the Canadian Electrical Code CSA C22.1 and any local codes or ordinances that might apply.

**⚠ WARNING**

**FIRE HAZARD**

Failure to follow this warning could result in personal injury, death, or property damage.

Do not connect aluminum wire between disconnect switch and furnace. Use only copper wire. See Fig. 31.

Use a separate, fused branch electrical circuit with a properly sized fuse or circuit breaker for this furnace. See Table 11 for wire size and fuse specifications. A readily accessible means of electrical disconnect must be located within sight of the furnace.

## J-Box Installation

**⚠ WARNING**

**FIRE OR ELECTRICAL SHOCK HAZARD**

Failure to follow this warning could result in personal injury, death, or property damage.

If field-supplied manual disconnect switch is to be mounted on furnace casing side, select a location where a drill or fastener cannot damage electrical or gas components.

The J-Box is used when field line voltage electrical connections are made to the furnace wiring harness inside the furnace casing. The J-Box is not required if a field-supplied electrical box is attached to the outside of the furnace casing and the box is grounded to the green ground wire of the main wiring harness and the earth ground of the field electrical supply.

The J-Box cover, mounting bracket and screws are shipped in the loose parts bag included with the furnace. The J-Box can be mounted on the left or right side of the casing, as viewed from the upflow position. See Fig. 30.

Remove the J-Box cover and mounting bracket from the loose parts bag. Select a 7/8-in. (22 mm) knock-out on the desired side of the casing. Remove the knock-out from the casing. Drill two (2) 1/8-in. (3 mm) pilot holes in the casing dimples by the desired 7/8-in. (22 mm) knock-out.

Align the J-box mounting bracket against the inside of the casing and secure the mounting bracket with the screws. See Fig. 30.

### Electrical Box on Furnace Casing Side

**NOTE**: Check that duct on side of furnace will not interfere with installed electrical box.

1. Fasten a field-supplied external electrical box to the outside of the casing by driving two field-supplied screws from inside electrical box into casing. See Fig. 31.
2. Route field power wiring into external electrical box.
3. Pull furnace power wires through 1/2-in. (12 mm) diameter hole in J-Box. If necessary, loosen power wires from strain-relief wire-tie on furnace wiring harness.
4. Connect any code required external disconnect(s) to field power wiring.
5. Route external field power wires through holes in electrical box and casing.
6. Connect field ground wire and factory ground wire to green ground screw on J-Box mounting bracket as shown in Fig. 30.
7. Connect field power and neutral leads to furnace power leads as shown in Fig. 33.
8. Attach furnace J-Box cover to mounting bracket with screws supplied in loose parts bag. Do not pinch wires between cover and bracket.
9. Complete external disconnect wiring and installation. Connect line voltage leads as shown in Fig. 31. Use best practices (NEC in U.S.A. for wire bushings, strain relief, etc., CANADA: Canadian Electrical Code CSA C22.1)

### Power Cord Installation in Furnace J-Box

**NOTE**: Power cords must be able to handle the electrical requirements listed in Table 11. Refer to power cord manufacturer's listings.

1. Install J-Box mounting bracket to inside of furnace casing. See Fig. 30.
2. Route listed power cord through 7/8-in. (22 mm) diameter hole in casing and J-Box bracket.
3. Secure power cord to J-Box bracket with a strain relief bushing or a connector approved for the type of cord used.
4. Pull furnace power wires through 1/2-in. (12 mm) diameter hole in J-Box. If necessary, loosen power wires from strain—relief wire-tie on furnace wiring harness.
5. Connect field ground wire and factory ground wire to green ground screw on J-Box mounting bracket as shown in Fig. 30.
6. Connect power cord power and neutral leads to furnace power leads as shown in Fig. 33.
7. Attach furnace J-Box cover to mounting bracket with screws supplied in loose parts bag. Do not pinch wires between cover and bracket. See Fig. 30.

### BX Cable Installation in Furnace J-Box

1. Install J-Box mounting bracket to inside of furnace casing. See Fig. 30.
2. Route BX connector through 7/8-in. (22 mm) diameter hole in casing and J-Box bracket.
3. Secure BX cable to J-Box bracket with connectors approved for the type of cable used.
4. Connect field ground wire and factory ground wire to green ground screw on J-Box mounting bracket as shown in Fig. 30.
5. Connect field power and neutral leads to furnace power leads. as shown in Fig. 33.
6. Attach furnace J-Box cover to mounting bracket with screws supplied in loose parts bag. Do not pinch wires between cover and bracket.

## 24-V Wiring

Make field 24-v connections at the 24-v terminal strip. See Fig. 34. Connect terminal Y/Y2 as shown in Fig. 33 for proper cooling operation. Use only AWG No. 18, color-coded, copper thermostat wire.

**NOTE**: Use AWG No. 18 color-coded copper thermostat wire for lengths up to 100 ft. (31 M). For wire lengths over 100 ft., use AWG No. 16 wire.

The 24-v circuit contains an automotive-type, 3-amp. fuse located on the control. Any direct shorts during installation, service, or maintenance could cause this fuse to blow. If fuse replacement is required, use ONLY a 3-amp. fuse of identical size. See Fig. 34.

### Thermostats

For best results, use a communicating wall control to control this modulating furnace. A single stage or two-stage heating and cooling thermostat can be used with the furnace. The furnace control board CPU will control the furnace and outdoor unit staging. A two stage heating and cooling thermostat can also be used to control the staging. However, full modulating capability will not be available when the furnace staging is controlled by the thermostat. Furnace staging will be limited to Minimum and Maximum inputs or Intermediate and Maximum inputs depending on the configuration of set-up switches SW1-2 and SW4-2. For two stage thermostat control of a 2-stage outdoor unit, remove the ACRDJ jumper from the furnace control board. Refer to typical thermostat wiring diagrams and the Sequence of Operation section for additional details. Consult the thermostat installation instructions for specific information about configuring the thermostat. See Fig. 34 and 35.

## Accessories (See Fig. 32 and 34.)

1. Electronic Air Cleaner (EAC)
   Connect an accessory Electronic Air Cleaner (if used) using 1/4-in. female quick connect terminals to the two male 1/4-in. quick-connect terminals on the control board marked EAC-1 and EAC-2. The terminals are rated for 115VAC, 1.0 amps maximum and are energized during blower motor operation.

2. Humidifier (HUM)

The HUM terminal is a 24 VAC output, energized when the blower is operating during a call for heat.

Connect an accessory 24 VAC, 0.5 amp. maximum humidifier (if used) to the ¼-in. male quick-connect HUM terminal and COM-24V screw terminal on the control board thermostat strip.

**NOTE**: If the humidifier has its own 24 VAC power supply, an isolation relay may be required. Connect the 24 VAC coil of the isolation relay to the HUM and COM/24V screw terminal on the control board thermostat strip. See Fig. 32.

3. Communication Connector (communication connection)
   This connection is used when the furnace is controlled by an optional communicating User Interface instead of a standard thermostat. The communication plug is supplied with the User Interface. Refer to the instructions supplied with the User Interface for complete details. See Fig. 34.
4. Outside Air Thermistor (OAT)
   The OAT connection is used in conjunction with communicating User Interface. It is not required when the furnace is controlled by a standard type thermostat. Refer to the instructions supplied with the User Interface for complete details.

## Alternate Power Supplies

This furnace is designed to operate on utility generated power which has a smooth sinusoidal waveform. If the furnace is to be operated on a generator or other alternate power supply, the alternate power supply must produce a smooth sinusoidal waveform for compatibility with the furnace electronics. The alternate power supply must generate the same voltage, phase, and frequency (Hz) as shown in Table 11 or the furnace rating plate.

Power from an alternate power supply that is non-sinusoidal may damage the furnace electronics or cause erratic operation.

Contact the alternate power supply manufacturer for specifications and details.



**Table 11 – Electrical Data**

| MODULATING | | | | | | | | |
|---|---|---|---|---|---|---|---|---|
| UNIT SIZE | VOLTS–HERTZ–PHASE | OPERATING VOLTAGE RANGE* | | MAXIMUM UNIT AMPS | UNIT AMPACITY# | MINIMUM WIRE SIZE AWG | MAXIMUM WIRE LENGTH FT (M)‡ | MAXIMUM FUSE OR CKT BKR AMPS† |
| | | Maximum* | Minimum* | | | | | |
| **42060** | 115–60–1 | 127 | 104 | 9.7 | 12.7 | 14 | 29 (8.8) | 15 |
| **60060** | 115–60–1 | 127 | 104 | 14.8 | 19.1 | 12 | 30 (9.1) | 20 |
| **42080** | 115–60–1 | 127 | 104 | 9.7 | 12.7 | 14 | 29 (8.8) | 15 |
| **60080** | 115–60–1 | 127 | 104 | 14.8 | 19.1 | 12 | 30 (9.1) | 20 |
| **66100** | 115–60–1 | 127 | 104 | 14.8 | 19.1 | 12 | 30 (9.1) | 20 |
| **66120** | 115–60–1 | 127 | 104 | 14.8 | 19.1 | 12 | 30 (9.1) | 20 |

* Permissible limits of the voltage range at which the unit operates satisfactorily.

\# Unit ampacity = 125 percent of largest operating component's full load amps plus 100 percent of all other potential operating components' (EAC, humidifier, etc.) full load amps.

†Time–delay type is recommended.

‡Length shown is as measured one way along wire path between furnace and service panel for maximum 2 percent voltage drop.

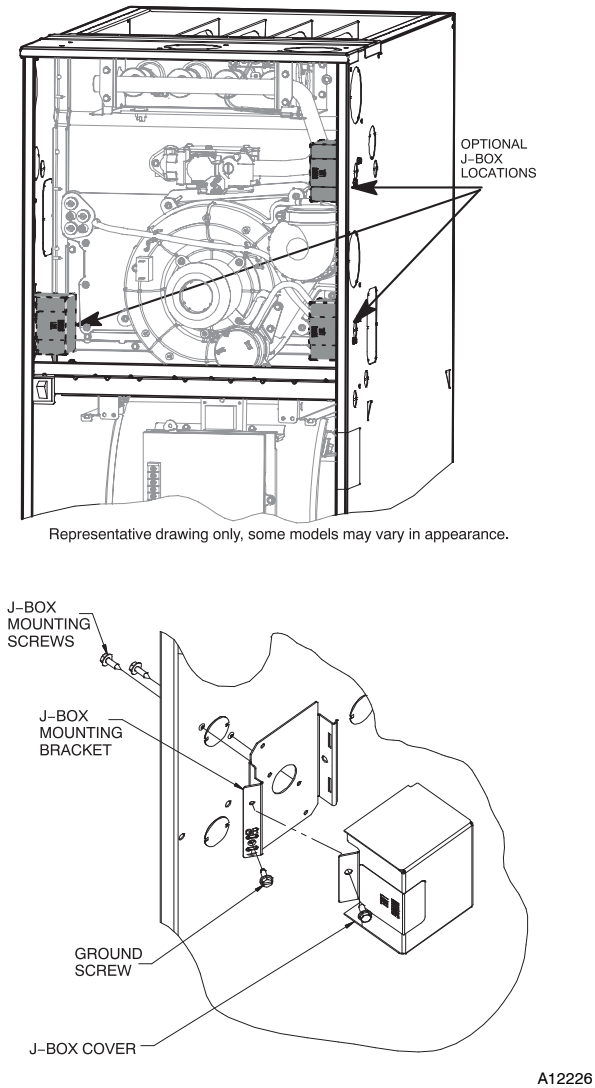


**Fig. 30 - Installing J-Box (When Used) Appearance May Vary**

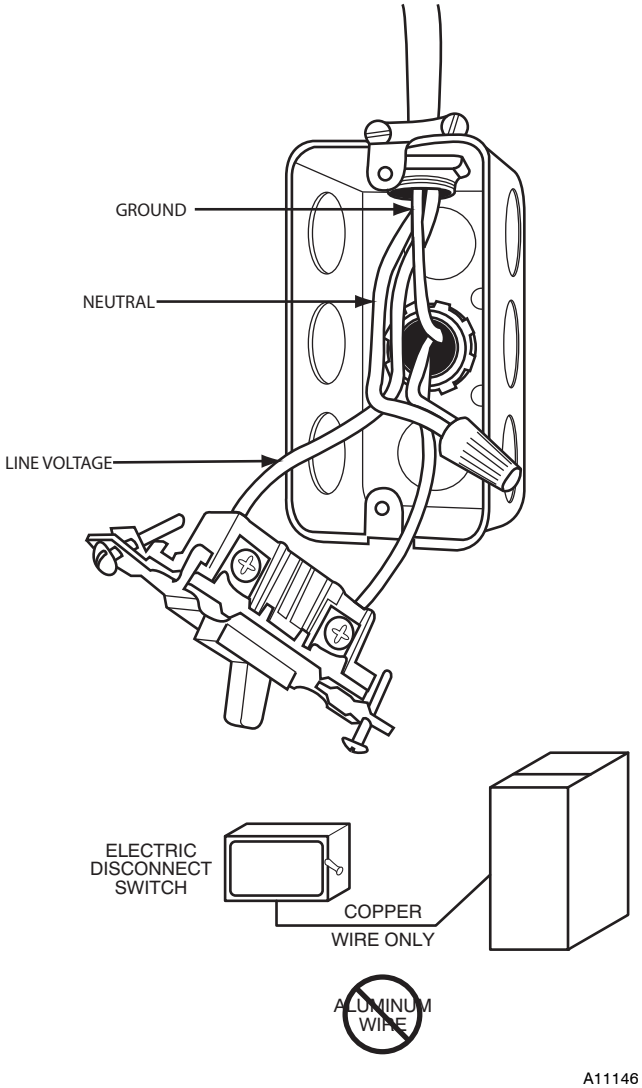


**Fig. 31 - Field-Supplied Electrical Box on Furnace Casing**

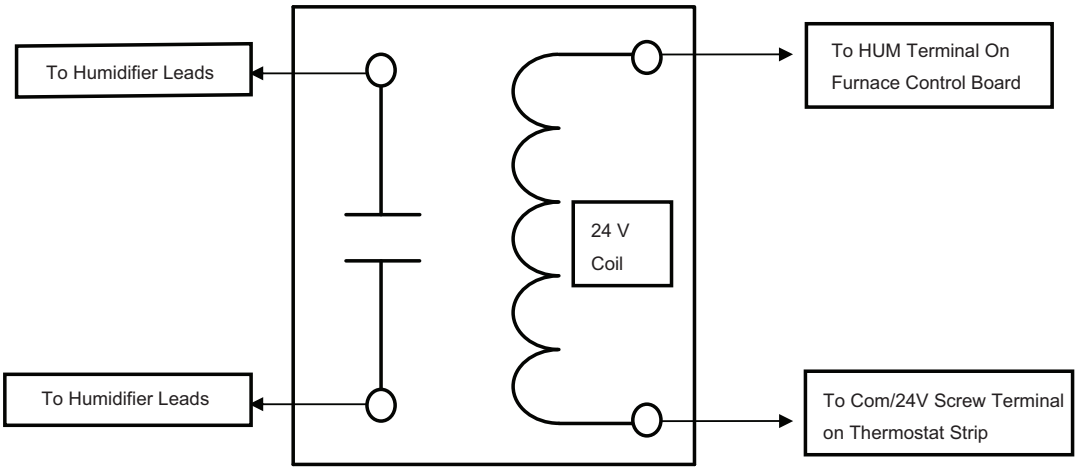


A11157

**Fig. 32 - Field-supplied Isolation Relay for Humidifiers with Internal Power Supply**



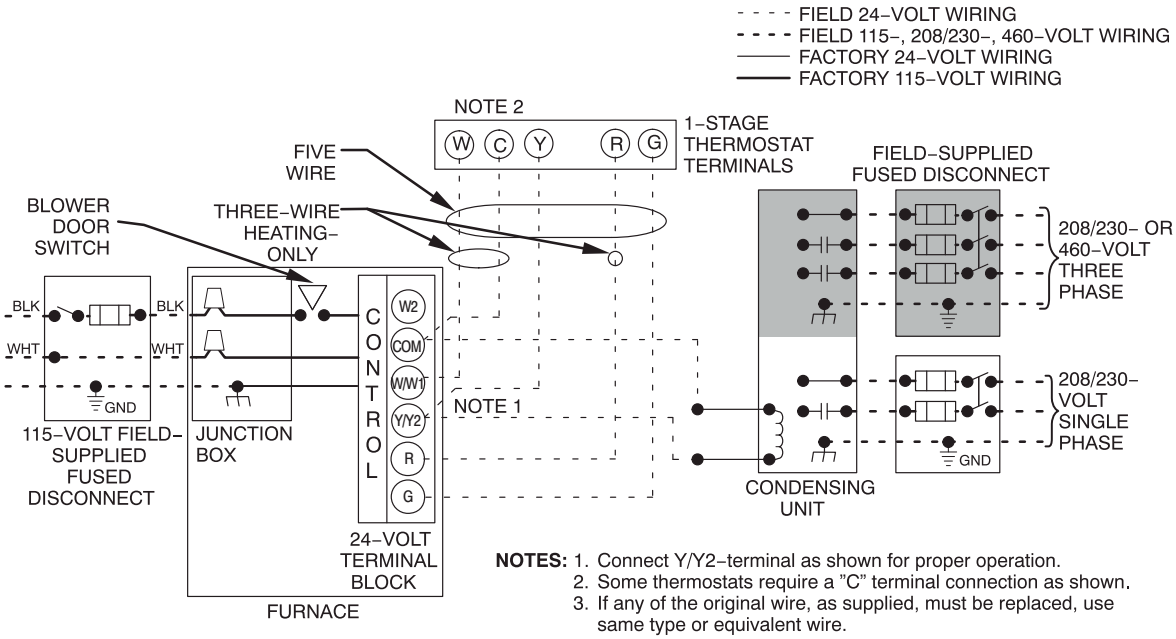


A11401

**Fig. 33 - Typical Field Wiring Diagram**

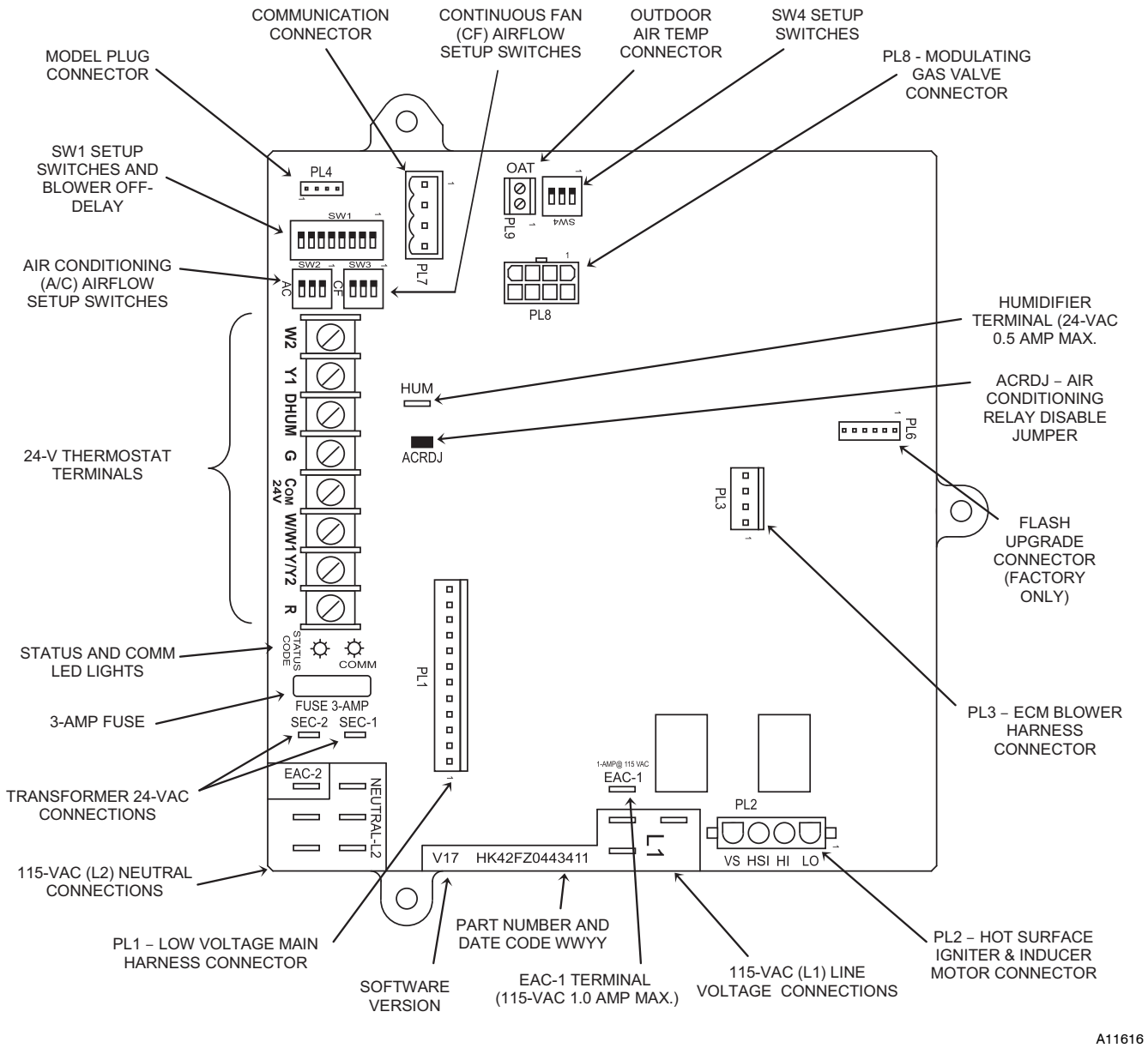


**Fig. 34 - Example of Modulating Furnace Control**

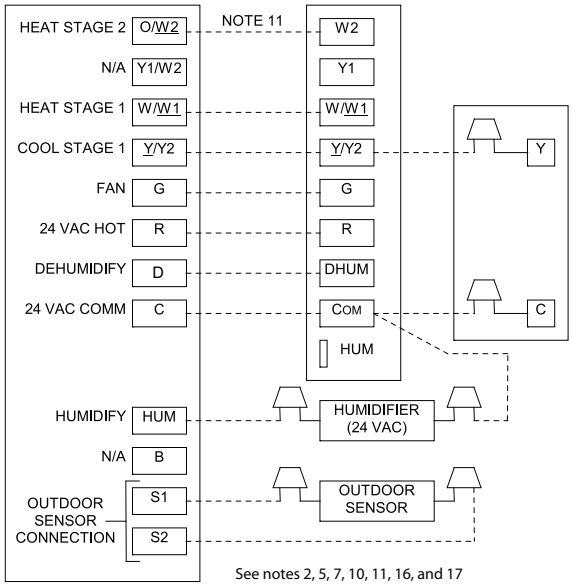


**Modulating and 2-Stage Furnace with Single-Speed Air Conditioner**

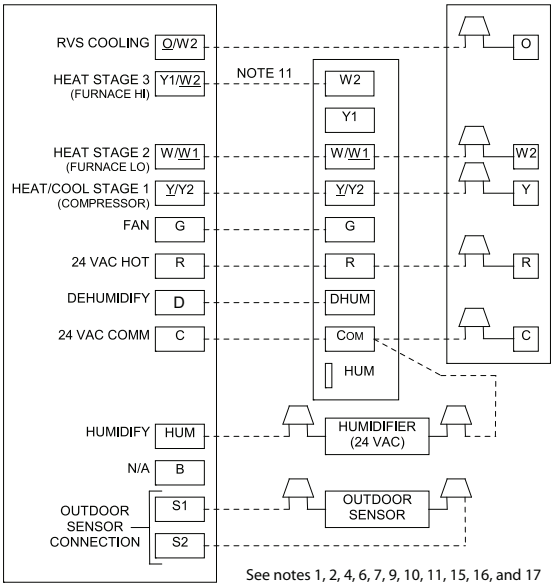


**Modulating and 2-Stage Furnace with Single-Speed Heat Pump**

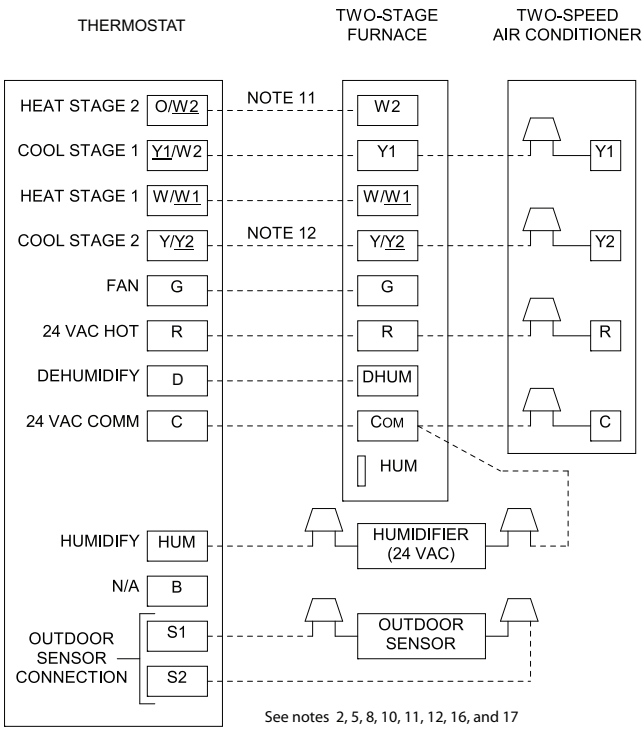


**Modulating and 2-Stage Furnace with Two-Speed Air Conditioner**

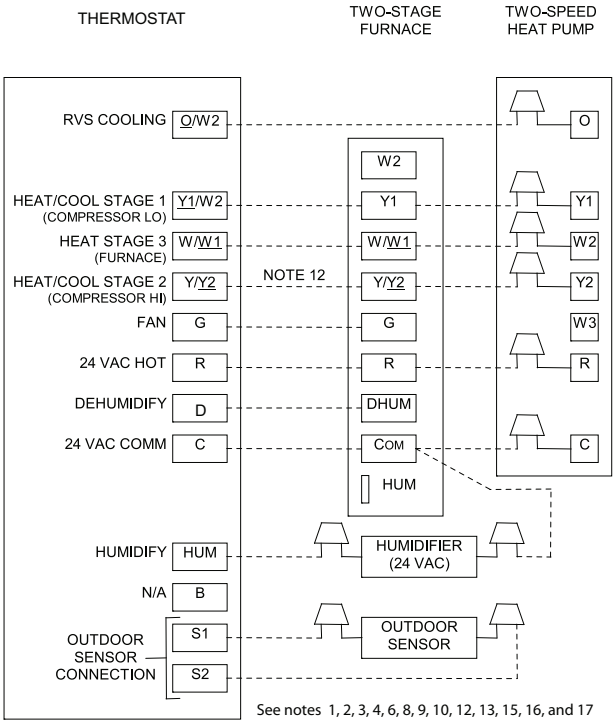


**Modulating and 2-Stage Furnace with Two-Speed Heat Pump**

A12222

**Fig. 35 - Thermostat Wiring Diagrams**

# NOTES FOR THERMOSTAT WIRING DIAGRAMS

1. Heat pump MUST have a high pressure switch for dual fuel applications.
2. Refer to outdoor equipment Installation Instructions for additional information and setup procedure.
3. If the heat pump date code is 1501E or earlier, select the "ZONE" position on the two speed heat pump control. Heat pumps with date code 1601E and later do not have or require a "ZONE" selection.
4. Outdoor Air Temperature - sensor must be attached in all dual fuel applications.
5. Configure the thermostat for air conditioner installations. Refer to thermostat instructions.
6. Configure thermostat for heat pump installations. Refer to thermostat instructions.
7. Configure thermostat for single-stage compressor operation. Refer to thermostat instructions.
8. Configure thermostat for two-stage compressor operation. Refer to thermostat instructions.
9. Configure thermostat for Dual Fuel Operation. Refer to thermostat instructions.
10. NO connection should be made to the furnace HUM terminal when using a thermostat with a 24 volt humidifier output.
11. Optional connection - If wire is connected to W2 on furnace control board, either dip switch SW1-2 or SW4-2 on furnace control should be set in ON position to allow thermostat to control furnace at 2 stages Min/Max or Intermediate/Max.
12. Optional connection - If wire is connected, ACRDJ jumper on furnace control should be removed to allow thermostat to control outdoor unit staging.
13. Furnace must control its own staging operation via furnace control algorithm. This is factory default.
14. The RVS Sensing terminal "L" should not be connected. This is internally used to sense defrost operation.
15. If thermostat has internal control of heat pump balance point, DO NOT SELECT the "FURNACE INTERFACE" or "BALANCE POINT" option on the two-speed heat pump control board. Refer to thermostat instructions
16. Configure Dehumidify function to remove 24 VAC from Dehum terminal on a demand to dehumidify.
17. Thermostat signals may vary. Consult thermostat installation instructions for more information.



# VENTING

**NOTE**: Planning for the venting system should be done in conjunction with planning for the ductwork, drainage, and furnace accessories, such as air cleaners and humidifiers. Begin assembling the venting system **AFTER** the furnace is set in place in the required orientation.

Venting for this furnace shall follow all Local codes for Category IV venting systems. This furnace is CSA approved for venting with PVC/ABS DWV venting systems. This furnace is also CSA approved for venting with M&G DuraVent® PolyPro® polypropylene venting systems.

**NOTE**: THESE INSTRUCTIONS **DO NOT** CONTAIN DETAILED INSTALLATION INSTRUCTIONS FOR POLYPROPYLENE VENTING SYSTEMS. Refer to the polypropylene venting system manufacturer's installation instructions for the polypropylene venting system installation.

**NOTE**: When using polypropylene venting systems, all venting materials used, including the vent terminations, must be from the same manufacturer.

## Special Venting Requirements for Installations in Canada

Installation in Canada must conform to the requirements of CSA B149 code. Vent systems **must** be composed of pipe, fittings, cements, and primers listed to ULC S636. The special vent fittings, accessory concentric vent termination kits and accessory external drain trap available from the furnace manufacturer have been certified to ULC S636 for use with those Royal Pipe and IPEX PVC vent components which have been certified to this standard. In Canada, the primer and cement must be of the same manufacturer as the vent system – GVS-65 Primer (Purple) for Royal Pipe or IPEX System 636, PVC/CPVC Primer, Purple Violet for Flue Gas Venting and GVS-65 PVC Solvent Cement for Royal Pipe or IPEX System 636(1)t, PVC Cement for Flue Gas Venting, rated Class IIA, 65 deg C. must be used with this venting system - do not mix primers and cements from one manufacturer with a vent system from a different manufacturer. Follow the manufacturer's instructions in the use of primer and cement and never use primer or cement beyond its expiration date.

The safe operation, as defined by ULC S636, of the vent system is based on following these installation instructions, the vent system manufacturer's installation instructions, and proper use of primer and cement. All fire stop and roof flashing used with this system must be UL listed material. Acceptability under Canadian standard CAN/CSA B149 is dependent upon full compliance with all installation instructions. Under this standard, it is recommended that the vent system be checked once a year by qualified service personnel.

The authority having jurisdiction (gas inspection authority, municipal building department, fire department, etc.) should be consulted before installation to determine the need to obtain a permit.

*IPEX System 636™ is a trademark of IPEX Inc.

## Consignes spéciales pour l'installation de ventilation au Canada

L'installation faite au Canada doit se conformer aux exigences du code CSA B149-2010. Ce systême de ventillation **doit** se composer de tuyaux, raccords, ciments et apprêts conformes au ULC S636. La tuyauterie de ventilation des gaz, ses accessoires, le terminal concentrique mural ainsi que l'ensemble du drain de condensation extérieur fourni par le fabricant de cette fournaise ont été certifiés ULCS 636 pour l'application des composantes Royal Pipe, IPEX PVC qui sont certifiées à ce standard. Au Canada, l'apprêt et le ciment doivent être du même fabricant que le système d'évacuation. L'apprêt GVS-65 (Purple) et le ciment-solvant GVS-65 doivent être utilisé avec les Royal Pipe. Système IPEX 636, apprêt PVC/CPVC, Purple pour évacuation des gaz de combustion et système IPEX 636(1)t, ciment PVC pour évacuation des gaz de combustion, coté classe IIA, 65 deg C. doivent être utilisés avec le système d'évacuation IPEX 636 – Ne pas combiner l 'apprêt et le ciment d'un manufacturier avec un système d'évacuation d'un manufacturier différent.

Bien suivre les indications du manufacturier lors de l'utilisation de l'apprêt et du ciment et ne pas utiliser ceux-ci si la date d'expiration est atteinte.

L'opération sécuritaire, tel que définit par ULC S636, du système de ventilation est basé sur les instructions d'installation suivantes, ainsi que l'usage approprié de l'apprêt et ciment. Tout arrët feu et solin de toit utilisés avec ce système doivent être des matériaux listés UL. L'acceptation du standard Canadien CAN/CSA B149 est directement relié à l'installation conforme aux instructions ci-haut mentionnées. Le standard Canadien recommande l' inspection par un personel qualifié et ce, une fois par année.

Les autoritées ayant juridiction (inspecteurs de gas, inspecteurs en bâtiments, département des incendies, etc) devraient être consultées avant l'installation afin de déterminer si un permis est requis.

## ⚠ WARNING

**CARBON MONOXIDE POISONING HAZARD**

Failure to follow the steps outlined below for each appliance connected to the venting system being placed into operation could result in carbon monoxide poisoning or death.

The following steps shall be followed for each appliance connected to the venting system being placed into operation, while all other appliances connected to the venting system are not in operation:

1. Seal any unused openings in venting system.
2. Inspect the venting system for proper size and horizontal pitch, as required in the National Fuel Gas Code, ANSI Z223.1/NFPA 54 or the CSA B149.1 Natural Gas and Propane Installation Code and these instructions. Determine that there is no blockage or restriction, leakage, corrosion and other deficiencies, which could cause an unsafe condition.
3. As far as practical, close all building doors and windows and all doors between the space in which the appliance(s) connected to the venting system are located and other spaces of the building.
4. Close fireplace dampers.
5. Turn on clothes dryers and any appliance not connected to the venting system. Turn on any exhaust fans, such as range hoods and bathroom exhausts, so they are operating at maximum speed. Do not operate a summer exhaust fan.
6. Follow the lighting instructions. Place the appliance being inspected into operation. Adjust the thermostat so appliance is operating continuously.
7. Test for spillage from draft hood equipped appliances at the draft hood relief opening after 5 minutes of main burner operation. Use the flame of a match or candle.
8. If improper venting is observed during any of the above tests, the venting system must be corrected in accordance with the National Fuel Gas Code, ANSI Z223.1/NFPA 54 and/or CSA B149.1 Natural Gas and Propane Installation Code.
9. After it has been determined that each appliance connected to the venting system properly vents when tested as outlined above, return doors, windows, exhaust fans, fireplace dampers and any other gas-fired burning appliance to their previous conditions of use.

## General

If this furnace replaces a furnace that was connected to a vent system or chimney, the vent or vent connectors of other remaining appliances may need to be re-sized. Vent systems or vent connectors of other appliances must be sized to the minimum size as determined using appropriate table found in the current edition of National Fuel Gas Code NFPA 54/ANSI Z-223.1. In Canada, refer to CAN/CSA-B149.1.

An abandoned masonry chimney may be used as a raceway for properly insulated and supported combustion-air (when applicable) and vent pipes. Each furnace must have its own set of combustion-air and vent pipes and be terminated individually, as shown in Fig. 46 for Direct Vent (2-Pipe) system or Fig. 47 for ventilated combustion air option.

A furnace shall not be connected to a chimney flue serving a separate appliance designed to burn solid fuel.

Other gas appliances with their own venting system may also use the abandoned chimney as a raceway providing it is permitted by local code, the current edition of the National Fuel Gas Code and the vent or liner manufacturer's installation instructions. Care must be taken to prevent the exhaust gases from one appliance from contaminating the combustion air of other gas appliances.

Do not take combustion air from inside the chimney when using ventilated combustion air or single pipe vent option.

These furnaces can be vented as either direct vent (two-pipe) or as ventilated combustion air system. Each type of venting system is described below. Common venting between these furnaces or other appliances is prohibited.

## Materials

### U.S.A.

Combustion air and vent pipe, fittings, primers, and solvents must conform to American National Standards Institute (ANSI) standards and American Society for Testing and Materials (ASTM) standards. See Table 13 for approved materials for use in the U.S.A. This furnace is also CSA approved for venting with M&G DuraVent® PolyPro® polypropylene venting systems.

### Canada

Special Venting Requirements for Installations in Canada Installation in Canada must conform to the requirements of CAN/CSA B149 code. Vent systems **must** be composed of pipe, fittings, cements, and primers listed to ULC S636. M&G DuraVent PolyPro polypropylene venting systems are ULC S636 listed.

**NOTE**: When using polypropylene venting systems, all venting materials used, including the vent terminations must be from the same manufacturer.

## Venting Systems

## ⚠ WARNING

**CARBON MONOXIDE POISONING HAZARD**

Failure to follow the instructions outlined below for each appliance being placed into operation could result in carbon monoxide poisoning or death.

For all venting configurations for this appliance and other gas appliances placed into operation for this structure, provisions for adequate combustion, ventilation, and dilution air must be provided in accordance with:

**U.S.A. Installations**: Section 9.3 NFPA 54/ANSI Z223.1 -2009, Air for Combustion and Ventilation and applicable provisions of the local building codes.

**Canadian Installations**: Part 8 of CAN/CSA-B149.1-10. Venting Systems and Air Supply for Appliances and all authorities having jurisdiction.

## NOTICE

**RECOMMENDED SUPPORT FOR VENT TERMINATION**

It is recommended that sidewall vent terminations of over 24 inches (0.6 M) in length or rooftop vent terminations of over 36 inches (1 M) in length be supported by EITHER the factory accessory vent termination kit or field-supplied brackets or supports attached to the structure. A factory accessory vent termination kit may be used for direct vent terminations. Termination kits are available for 2-in. or 3-in. pipe. See Table 12 for available options.

**Table 12 – Vent Termination Kit for Direct Vent (2-pipe) Systems**

| DIRECT VENT (2–PIPE) TERMINATION KIT | TERMINATION SYSTEM | DIAM. OF COMBUSTION AIR AND VENT PIPES – IN. (mm) |
|---|---|---|
| 2–in. (51 mm) Concentric Vent Kit | Single Penetration of Wall or Roof | 1, 1–1/2, 2, or 2–1/2 (24, 36, 51, 64 mm) |
| 3–in. (76 mm) Concentric Vent Kit | Single Penetration of wall or Roof | 2–1/2, 3 or 4 (64, 76, 102 mm) |

### Direct Vent / 2-Pipe System

In a direct-vent (2-pipe) system, all air for combustion is taken directly from outdoor atmosphere, and all flue products are discharged to outdoor atmosphere. Combustion-air and vent pipes must terminate together in the same atmospheric pressure zone, either through the roof (preferred) or a sidewall. See Fig. 44 for references to clearances required by National code authorities.

**NOTICE**

**OPTIONAL CONFIGURATION FOR COMBUSTION AIR INLET PIPE**

In applications where there is a risk of excessive moisture entering the combustion air inlet pipe, a moisture trap may be added to the inlet pipe to help prevent moisture from entering the furnace from the combustion air inlet pipe. See Fig. 51.

When sizing venting systems, the equivalent length of the optional inlet pipe moisture trap must be taken into account.

### Ventilated Combustion Air Systems

In a ventilated combustion air option, the vent terminates and discharges the flue products directly to the outdoors similar to a direct vent system. See Fig. 45 for references to clearances required by National code authorities.

All air for combustion is piped directly to the furnace from a space that is well ventilated with outdoor air (such as an attic or crawl space) and the space is well isolated from the living space or garage. Combustion air requirements for this option are the same as the requirements for providing outside air for combustion for a single pipe vent system. Refer to the "Air For Combustion and Ventilation" Section.

**NOTICE**

**OPTIONAL VENTING BELOW THE FURNACE**

The venting system may be positioned below the furnace **ONLY** IF the factory accessory External Vent Trap Kit is used. The External Vent Trap Kit is only approved for PVC/ABS DWV venting systems.

**CAREFULLY FOLLOW THE INSTRUCTIONS PROVIDED WITH THE EXTERNAL VENT TRAP KIT FOR LAYING OUT THE VENTING SYSTEM AND THE DRAIN SYSTEM.** The instructions included with this furnace **DO NOT APPLY** to vent systems that are located below the furnace.

**⚠ WARNING**

**CARBON MONOXIDE POISONING HAZARD**

Failure to follow the instructions outlined below for each appliance being placed into operation could result in carbon monoxide poisoning or death.

The instructions included with this furnace **DO NOT APPLY** to vent systems that are located below the furnace. **CAREFULLY FOLLOW THE INSTRUCTIONS PROVIDED WITH THE EXTERNAL VENT TRAP KIT FOR LAYING OUT THE VENTING SYSTEM AND THE DRAIN SYSTEM** when all or part of the venting system is placed below the furnace.

Proper configuration of the venting and drain system is critical when placing all or part of the venting system below the level of the furnace. **VENT GASSES COULD BE RELEASED FROM THE DRAINAGE SYSTEM** if the instructions provided with the External Vent Trap Kit are not followed.

## Locating the Vent Termination

### General

**NOTE: Termination Requirements for the Provinces of Alberta and Saskatchewan are located at the end of this section.**

Combustion-air inlet pipe (direct vent/2-pipe system only) and vent pipe must terminate outside structure, either through sidewall or roof.

For vent termination clearance, references to National codes are shown in Fig. 44 for Direct Vent/2-Pipe system and Fig. 45 for Ventilated Combustion Air system. For exterior termination arrangements, refer to Fig. 46 for Direct Vent/2-Pipe system and Fig. 47 for Ventilated Combustion Air system. Contact Local code authorities for other requirements to and/or exemptions from the National codes shown in the figures.

Roof termination is often preferred since it is less susceptible to damage or contamination, is usually located away from adjacent structures, is less prone to icing conditions, and it often has less visible vent vapors. Sidewall terminations may require sealing or shielding of building surfaces with a corrosive resistance material due to the corrosive properties of combustion products from the vent system, as well as protection of adjacent structures.

**NOTICE**

**RECOMMENDED SUPPORT FOR VENT TERMINATIONS**

It is recommended that sidewall vent terminations in excess of 24 inches (0.6 M) or rooftop terminations in excess of 36 inches (1 M) in vertical length be supported by **EITHER** the Direct Vent Termination Kit shown in Table 12 or by field-supplied brackets or supports fastened to the structure.

When determining appropriate location for termination, consider the following guidelines:

1. Comply with all clearance requirements stated in Fig. 44 or Fig. 45 per application.
2. Termination or termination kit should be positioned where vent vapors will not damage plants/shrubs or air conditioning equipment.
3. Termination or termination kit should be positioned so that it will not be affected by wind eddy, such as inside building corners, nor by recirculation of flue gases, airborne leaves, or light snow.

4. Termination or termination kit should be positioned where it will not be damaged by or subjected to foreign objects such as stones, balls, etc.
5. Termination or termination kit should be positioned where vent vapors are not objectionable.

### Direct Vent / 2-Pipe System

Direct vent (2-pipe) vent and combustion air pipes must terminate outside the structure. See Fig. 44 For references to vent clearances re. Allowable vent and combustion air terminations are shown in Fig. 46.

**⚠ WARNING**

**CARBON MONOXIDE POISONING HAZARD**

Failure to follow the instructions outlined below for each appliance being placed into operation could result in carbon monoxide poisoning or death.

For all venting configurations for this appliance and other gas appliances placed into operation for this structure, provisions for adequate combustion, ventilation, and dilution air must be provided in accordance with:
**U.S.A. Installations**: Section 9.3 NFPA 54/ANSI Z223.1 -2009, Air for Combustion and Ventilation and applicable provisions of the local building codes.

**Canadian Installations**: Part 8 of CAN/CSA-B149.1-10. Venting Systems and Air Supply for Appliances and all authorities having jurisdiction.

### Ventilated Combustion Air

The vent pipe for a Ventilated Combustion Air System must terminate outdoors. See Fig. 45 For references to vent clearances required by National code authorities. Allowable vent terminations are shown in Fig. 47. The combustion air pipe terminates in a well-ventilated attic or crawl space. Follow the clearances as shown in Fig. 49.

The combustion air pipe cannot terminate in attics or crawl spaces that use ventilation fans designed to operate in the heating season. If ventilation fans are present in these areas, the combustion air pipe must terminate outdoors as a Direct Vent System.

**Termination Requirements for the Provinces of Alberta and Saskatchewan**

The Provinces of Alberta and Saskatchewan require a minimum unobstructed distance of 4 ft. (1.2 M) from the foundation to the property line of the adjacent lot for vent termination of any appliance with an input over 35,000 btuh. If there is less than 4 ft. (1.2 M) of unobstructed distance to the property line of the adjacent lot, no type of vent termination is permitted for appliances with inputs greater than 35,000 btuh.

There are no additional restrictions on unobstructed distances greater than 8 ft. (2.4 M). All single, two-pipe and concentric vents may be used, providing all other Code and manufacturer's requirements in these instructions are adhered to. Refer to the appropriate **Vent Termination** section above for locating the vent termination

If the unobstructed distance from the foundation to the property line of the adjacent lot is no less than 4 ft. (1.2 M) and no greater than 8 ft. (2.4 M), it will be necessary to re-direct the flue gas plume. In this situation, a concentric vent kit cannot be used. A 2-pipe termination (or single pipe termination when permitted with ventilated combustion air applications) that re-directs the flue gas away by use of an elbow or tee, certified to ULC S636 from the adjacent property line must be used. See Fig. 48.

The concentric vent kit currently cannot be modified to attach an elbow to the vent portion of the rain cap. A tee attached to the rain cap could potentially direct the flue gas plume toward the intake air stream and contaminate the incoming combustion air for the furnace.

Refer to Fig. 48 for terminations approved for use in Alberta and Saskatchewan.

## Size the Vent and Combustion Air Pipes

### General

Furnace combustion air and vent pipe connections are sized for 2-in. (50 mm ND) PVC/ABS DWV pipe. The combustion air and vent pipe connections also accommodate 60 mm polypropylene venting systems with outside diameters of approximately 60 mm (2-3/8 inches). Any pipe diameter change should be made outside furnace casing in vertical pipe. Any change is diameter to the pipe must be made as close to the furnace as reasonably possible.

The Maximum Vent Length for the vent and combustion air pipe (when used) is determined from the Maximum Equivalent Vent Length in Table 15 or 17, minus the number of fittings multiplied by the deduction for each type of fitting used from Table 16.

**NOTICE**

**OPTIONAL CONFIGURATION FOR COMBUSTION AIR INLET PIPE**

In applications where there is a risk of excessive moisture entering the combustion air inlet pipe, a moisture trap may be added to the inlet pipe to help prevent moisture from entering the furnace from the combustion air inlet pipe. See Fig. 51.

When sizing venting systems, the equivalent length of the optional moisture trap (15 feet/5 M) must be taken into account.

### Optional Combustion Air Inlet Moisture Trap

As an option to prevent moisture from trickling into the furnace vestibule, a trap can be installed in the intake air pipe near the furnace. Connecting a drain line to the trap is optional as trace amounts of moisture will evaporate into the intake air stream. If the combustion air inlet is located near a moisture exhaust duct, or there are other concerns of excessive moisture being drawn into the combustion air inlet, it is encouraged to connect a drain line to the trap.

The trap can be constructed from a running tee of the same diameter of the intake air pipe with **EITHER** a removable cap attached to a 6-inch long pipe connected to the tee or the External Vent Trap Kit to help prevent contaminants from entering the furnace. See Fig. 51.

The External Vent Trap Kit accessory may be used as a trap for the combustion air inlet pipe if a large amount of moisture must be removed. The drain line may be connected to the same drain as the furnace condensate and the evaporator coil condensate line **ONLY** if the inlet air trap drain and the evaporator coil drain empty into an open segment of pipe above the drain. See Fig.12. When using the External Vent Trap Kit, refer to those instructions for proper drain connections.

The tee may also be connected to the intake air pipe on the side of the casing. See Fig. 51.

In any configuration, it will be necessary to add the equivalent length of the tee (15 feet/5 M) to the Total Equivalent Vent Length of the venting system.

# NOTICE

**ADDITIONAL INFORMATION FOR POLYPROPYLENE VENTING SYSTEMS**

Polypropylene venting systems include flexible vent pipe. These flexible vent pipes have a different equivalent vent length than straight sections of PVC/ABS DWV vent pipe. Be sure to make the appropriate deductions from the Maximum Equivalent Vent Length (MEVL), or additions to the Total Equivalent Vent Length (TEVL), when applying flexible vent pipes in polypropylene venting systems. See the polypropylene vent system manufacturer's installation instructions for details.

When using metric-sized venting systems, use these equivalencies for obtaining the proper MEVL from the Tables:
Use 2" Vent Tables for 60 mm (o.d.) vent systems
Use 3" Vent Tables for 80 mm (o.d.) vent systems
Use 4" Vent Tables for 100 mm (o.d.) vent systems



The measured length of pipe used in a single or 2-pipe termination is included in the total vent length. Include deductions from the Maximum Equivalent Vent Length (MEVL) contained in the Venting Tables for elbows and flexible vent pipe. Factory accessory concentric vent terminations or pipe lengths and elbows used for "standard" vent terminations do not require a deduction from the Maximum Equivalent Vent Length. See vent termination figures associated with Table 15. Include a deduction for a Tee when used for Alberta and Saskatchewan terminations.

**NOTE**: Polypropylene venting systems MAY require additional deductions from the MEVL, or additions to the TEVL, for vent terminations and flexible pipe sections. See the polypropylene venting system manufacturer's instructions for details on equivalent lengths of vent terminations and flexible vent pipes, and for calculating total vent lengths.

To calculate the Total Equivalent Vent Length (TEVL) of the venting system:

1. Measure the individual distance from the furnace to the termination for each pipe.
2. Count the number of elbows for each pipe.
3. For each pipe, multiply the number of elbows by the equivalent length for the type of elbow used. Record the equivalent length of all the elbows for each pipe.
4. If a Tee is used on the termination (Alberta and Saskatchewan, when required) record the equivalent length of the Tee used.
5. Calculate Total Equivalent Vent Length by adding the equivalent lengths of the fittings to the lengths of the individual vent and combustion air pipes.
6. When using polypropylene venting systems with flexible vent pipes, perform adjustments for the equivalent length of the flexible vent pipe to the calculated total equivalent venting system length. See the polypropylene vent system manufacturer's instructions for details.
7. Select a diameter of vent pipe from Tables 15 and 17 and note the Maximum Equivalent Vent Length (MEVL) shown for that application for that specific furnace input size. Compare the Total Equivalent Vent Length (TEVL) to the MEVL:
8. If the Total Equivalent Vent Length is ***shorter*** than the Maximum Equivalent Vent Length for the diameter of pipe chosen, then that diameter of pipe selected may be used.
9. If the Total Vent Length is ***longer*** than the Maximum Equivalent Vent Length for the diameter of pipe chosen, that diameter pipe MAY NOT be used for venting the furnace. Try the next larger diameter pipe.

**NOTE**: If the calculated Total Equivalent Vent Lengths results in different diameter pipes for the vent and combustion air, select the larger diameter for both pipes.

**NOTE**: If the Maximum Vent Length for diameter of the pipe selected is longer than the measured length and the equivalent length of all the fittings and terminations (TEVL), recalculate Total Equivalent Vent Length using the next smaller diameter. If the Maximum Equivalent Vent Length is still longer than the longer TEVL of the vent pipe or combustion air pipe, then that diameter of pipe selected may be used.

When installing vent systems pipe lengths of 10 ft. (3 M) or less, use the smallest allowable pipe diameter. Using a pipe size greater than required for short venting systems may result in loss of efficiency, incomplete combustion, flame disturbance, or flame sense lockout.

For vent systems longer than 10 ft. (3 M), any larger diameter vent pipe shown in Table 15 or 17 **FOR THAT SIZE FURNACE** may be used.

## Combustion Air and Vent Piping Insulation Guidelines

**NOTE**: Use closed cell, neoprene insulation or equivalent.

The vent pipe may pass through unconditioned areas. The amount of exposed pipe allowed is shown in Table 14**.**

1. Using winter design temperature (used in load calculations), find appropriate temperature for your application and furnace model.
2. Determine the amount of total and exposed vent pipe.
3. Determine required insulation thickness for exposed pipe length(s).
4. When combustion air inlet piping is installed above a suspended ceiling, the pipe **MUST** be insulated with moisture resistant insulation such as Armaflex or other equivalent type of insulation.
5. Insulate combustion air inlet piping when run in warm, humid spaces.
6. Install the insulation per the insulation manufacturer's installation instructions.

**NOTE**: Pipe length (ft. / M) specified for maximum pipe lengths located in unconditioned spaces cannot exceed total allowable pipe length as calculated from Table 15 or 17.

## Configure the Furnace

# ⚠ WARNING

**CARBON MONOXIDE POISONING HAZARD**

Failure to follow this warning could result in personal injury or death.

To route the vent pipe and combustion air pipe through the furnace, the manufacturer supplied kit must be used. Failure to properly seal the blower compartment from the furnace vestibule could result in the circulation of carbon monoxide throughout the structure. The vent pipe and combustion air pipe must be a continuous pipe while passing through the blower compartment. Seals supplied in this kit must be installed per the instructions provided. Follow all procedures outlined in these instructions.

### Install the Vent and Combustion Air Pipes

With the furnace installed in the required position, remove the desired knockouts from the casing. It will be necessary to remove one knockout for the vent pipe and the other knockout for the combustion air connection. See Fig. 11.

Use a flat blade screwdriver and tap on the knockout on opposite sides, where the knockout meets the casing. Fold the knockout down with duct pliers and work the knockout back and forth until it is removed. Trim any excess metal from the knockout with tin snips.

The vent elbow can be rotated to the required location on the casing if necessary. See Fig. 37. To rotate the vent elbow:

1. Loosen the clamp on the inlet of the vent elbow attached to the inducer.
2. Rotate the vent elbow to the required position. There are rounded notches in the vent elbow to align it with the inducer housing for each orientation.
3. Tighten the clamp around the vent elbow. Torque the clamp to 15 lb-in. See Fig. 38-41.

### Installing the Vent Pipe Adapter and Combustion Air Pipe Adapter

**⚠ WARNING**

**CARBON MONOXIDE POISONING HAZARD**

Failure to follow this warning could result in personal injury or death.

To route the vent pipe and combustion air pipe through the furnace, the manufacturer supplied kit must be used. Failure to properly seal the blower compartment from the furnace vestibule could result in the circulation of carbon monoxide throughout the structure. The vent pipe and combustion air pipe must be a continuous pipe while passing through the blower compartment. Seals supplied in this kit must be installed per the instructions provided. Follow all procedures outlined in these instructions.

**⚠ WARNING**

**CARBON MONOXIDE POISONING HAZARD**

Failure to follow this warning could result in personal injury or death.

**DO NOT** use cement to join polypropylene venting systems. Follow the polypropylene venting system manufacturer's instructions for installing polypropylene venting systems.

**NOTE**: The rubber coupling that attaches to the vent pipe adapter must be used. The adapter seals the vent pipe to the casing and reduces the strain on the vent elbow attached to the inducer.

1. Apply the gaskets to the vent pipe and combustion air pipe adapters. If supplied, remove and discard round center "slug" from interior of gasket. See Fig. 36.

**NOTE**: The vent pipe adapter can be distinguished from the inlet pipe adapter by the absence of an internal pipe-stopping ring. The vent pipe can pass through the vent pipe adapter; it cannot pass through the inlet pipe adapter.

2. Align the screw holes in the plastic vent pipe adapter with the dimples in the casing.
3. Pilot drill the screw holes for the adapter in the casing and attach the vent pipe adapter to the furnace with sheet metal screws
4. Slide the end of the rubber vent coupling with notches in it over the standoffs on the vent pipe adapter.
5. Insert a length of vent pipe through the coupling into the outlet of the vent elbow.
6. Tighten the clamp around the outlet of the vent elbow. Torque the clamp to 15 lb-in.

**NOTICE**

The following instructions are for PVC/ABS DWV vent piping only. DO NOT USE THESE TECHNIQUES FOR POLYPROPYLENE VENT PIPING SYSTEMS. See the polypropylene vent system manufacturer's instructions for installing polypropylene venting systems.

Install the remaining vent and combustion air pipes as shown below. It is recommended that all pipes be cut, prepared, and preassembled before permanently cementing any joint.

1. Working from furnace to outside, cut pipe to required length(s).
2. De-burr inside and outside of pipe.
3. Chamfer outside edge of pipe for better distribution of primer and cement.
4. Clean and dry all surfaces to be joined.
5. Check dry fit of pipe and mark insertion depth on pipe.
6. Insert the vent pipe into the vent elbow.
7. Torque clamp on vent elbow 15 lb-in.
8. Torque clamp on vent coupling 15 lb-in.
9. Insert the combustion air pipe into the adapter.
10. Pilot drill a screw hole through the adapter into the combustion air pipe and secure the pipe to the adapter with sheet metal screws. DO NOT DRILL INTO POLYPROPYLENE VENT PIPES. Use an optional accessory vent coupling, if needed.
11. Seal around the combustion air pipe with silicone or foil tape. SILICONE SEALERS MAY NOT BE APPROPRIATE FOR POLYPROPYLENE VENT SYSTEMS. SEE POLYPROPYLENE VENT SYSTEM MANUFACTURER'S INSTRUCTIONS.
12. After pipes have been cut and preassembled, apply generous layer of cement primer to pipe fitting socket and end of pipe to insertion mark. Quickly apply approved cement to end of pipe and fitting socket (over primer). Apply cement in a light, uniform coat on inside of socket to prevent buildup of excess cement. Apply second coat. DO NOT CEMENT POLYPROPYLENE FITTINGS.
13. While cement is still wet, twist pipe into socket with 1/4-in. turn. Be sure pipe is fully inserted into fitting socket.
14. Wipe excess cement from joint. A continuous bead of cement will be visible around perimeter of a properly made joint.
15. Handle pipe joints carefully until cement sets.
16. Horizontal portions of the venting system shall be supported to prevent sagging. Support combustion air piping and vent piping a minimum of every 5 ft. (1.5M)[3 ft. (.91M) for SDR-21 or -26 PVC] using perforated metal hanging strap or commercially available hangars designed to support plastic pipe.
17. Prevent condensate from accumulating in the pipes by sloping the combustion air piping and vent piping downward towards furnace a minimum of 1/4-in. per linear ft. with no sags between hangers.
18. Complete the vent and combustion air pipe installation by connecting the concentric vent or by installing the required

termination elbows as shown in Fig. 46, 47 and 48.
For Ventilated Combustion Air Termination, See Fig. 49.

19. Use appropriate methods to seal openings where combustion air pipe and vent pipe pass through roof or sidewall.

**⚠ WARNING**

**CARBON MONOXIDE POISONING HAZARD**

Failure to follow this warning could result in personal injury or death.

**DO NOT** use cement to join polypropylene venting systems. Follow the polypropylene venting system manufacturer's instructions for installing polypropylene venting systems.

987MA

### Optional Installation of the Vent Pipe

**NOTE**: DO NOT USE THIS TECHNIQUE FOR POLYPROPYLENE VENTING SYSTEMS.

This option provides a disconnect point for the vent pipe. The vent pipe must be cemented to the plastic vent pipe adapter to maintain a sealed vestibule. See Fig. 42.

1. Insert a length of vent pipe through the casing into the outlet of the vent elbow.
2. Slide the plastic vent pipe adapter over the length of the vent pipe down to the furnace casing. Mark the pipe where it is flush with the outlet of the adapter.
3. Remove the pipe from the furnace and the adapter and cut off any excess pipe.
4. Clean and prime the end of the pipe that is flush with the vent adapter with a primer that is appropriate for the type of pipe being used.
5. Re-insert the pipe through the casing into the vent elbow.
6. Tighten the clamp around the outlet of the vent elbow. Torque the clamp to 15 lb-in.
7. Apply cement to the end of the pipe and to the inside of the plastic vent adapter.
8. Slide the adapter over the vent pipe and align the screw holes in the adapter with the dimples in the furnace casing.
9. Pilot drill 1/8-in. screw holes for the adapter in the casing and secure the adapter to the furnace with sheet metal screws.
10. Loosen the clamps on the rubber vent coupling.
11. Slide the end of the coupling with notches in it over the standoffs in the vent pipe adapter.
12. Tighten the clamp of the coupling over the vent pipe adapter. Torque the lower clamp around the vent pipe adapter to 15 lb-in.
13. Pilot drill a 1/8-in. hole in the combustion air pipe adapter.
14. Complete the vent and combustion air pipe as shown in "Install the Vent and Combustion Air Pipe."

**NOTICE**

**FOR POLYPROPYLENE VENTING SYSTEMS**

When using polypropylene venting systems, all venting materials used, including the vent terminations, must be from the same manufacturer.

## Installing the Vent Termination

### Roof Terminations

A roof termination of any type will require a 4-in. (102 mm) flashing for a 2 inch (50 mm ND) concentric vent or a 5-in. diameter (127 mm) flashing for a 3-inch (80 mm ND) concentric vent kit. For two-pipe or single pipe vent systems, a flashing for each pipe of the required diameter will be necessary.

It is recommended that the flashing be installed by a roofer or competent professional prior to installing the concentric vent. The terminations can be installed on a flat or pitched roof.

**Concentric Vent**

Single or multiple concentric vent must be installed as shown in Fig. 46. Maintain the required separation distance between vents or pairs of vents as shown in Fig. 46 and all clearance shown in Fig. 44.

**NOTE**: Follow the instructions of the vent terminal manufacturer. These instructions are provided as a reference, only.

Cut one 4-in. (102 mm) diameter hole for 2-in. (50 mm ND) kit, or one 5-in. (127 mm) diameter hole for 3-in. (80 mm ND) kit in the desired location.

Loosely assemble concentric vent/combustion air termination components together using instructions in kit.

Slide assembled kit with rain shield **REMOVED** through hole in wall or roof flashing.

**NOTE**: Do not allow insulation or other materials to accumulate inside of pipe assembly when installing it through hole.

Disassemble loose pipe fittings. Clean and cement using same procedures as used for system piping. DO NOT CEMENT POLYPROPYLENE FITTINGS.

**Two-Pipe (Direct Vent) and Single-Pipe (Ventilated Combustion Air) Terminations**

Single and two pipe vent terminals must be installed as shown in Fig. 46 and 47. Maintain the required separation distance between vents or pairs of vents as shown in Fig. 46 and 47. and all clearance shown in Fig. 44 and 45.

**NOTICE**

**RECOMMENDED SUPPORT FOR VENT TERMINATIONS**

It is recommended that rooftop vent terminations in excess of 36 inches (1 M) in vertical length be supported by **EITHER** the Direct Vent Termination Kit shown in Table 12 or by field-supplied brackets or supports fastened to the structure.

Cut the required number of holes in the roof or sidewall for vent and (when used) combustion air pipes. Sidewall holes for two-pipe vent terminations should be side-by-side, allowing space between the pipes for the elbows to fit on the pipes.

Holes in the roof for direct-vent (two pipe) terminations should be spaced no more than 18 in. (457 mm) apart to help avoid vent gas recirculation into combustion air intake.

Termination elbows will be installed after the vent and (if used) combustion air pipe is installed.

### Sidewall Terminations

### Concentric Vent Termination

**NOTE**: Follow the instructions of the vent terminal manufacturer. These instructions are provided as a reference only.

Determine an appropriate location for termination kit using the guidelines provided in section "Locating The Vent Termination" in this instruction.

1. Cut one 4-in. diameter hole for 2-in. kit, or one 5-in. diameter hole for 3-in. kit.
2. Loosely assemble concentric vent/combustion air termination components together using instructions in kit.
3. Slide assembled kit with rain shield REMOVED through hole.

**NOTE**: Do not allow insulation or other materials to accumulate inside of pipe assembly when installing it through hole.

4. Locate assembly through sidewall with rain shield positioned no more than 1-in. (25 mm) from wall as shown in Fig. 46.
5. Disassemble loose pipe fittings. Clean and cement using same procedures as used for system piping. DO NOT CEMENT POLYPROPYLENE FITTINGS.

### 2-Pipe (Direct Vent) and 1-Pipe (Ventilated Combustion Air) Vent Termination

**NOTE**: Follow the instructions of the vent terminal manufacturer. These instructions are provided as a reference, only.

**NOTICE**

**RECOMMENDED SUPPORT FOR VENT TERMINATIONS**

It is recommended that sidewall vent terminations in excess of 24 inches (0.6 M) in vertical length be supported by **EITHER** the Direct Vent Termination Kit shown in Table 12 or by field-supplied brackets or supports fastened to the structure.

Determine an appropriate location for termination kit using the guidelines provided in section "Locating The Vent Termination" in this instruction.

1. Cut two holes, one for each pipe, of appropriate size for pipe size being used.
2. Loosely install elbow in bracket (if used) and place assembly on combustion-air pipe.
3. Install bracket as shown in Fig. 46 and 48.

**NOTE**: For applications using vent pipe option indicated by dashed lines in Fig. 46 and 47, rotate vent elbow 90° from position.

4. Disassemble loose pipe fittings. Clean and cement using same procedures as used for system piping. DO NOT CEMENT POLYPROPYLENE FITTINGS.

**For ventilated Combustion Air Terminations, terminate as shown in Fig. 47.**

### (Direct Vent / 2-Pipe System ONLY)

When two or more furnaces are vented near each other, two vent terminations may be installed as shown in Fig. 46, but next vent termination, or pair of vent terminations, must be at least 36 in. (914 mm) away from the first two terminations. It is important that vent terminations be made as shown in Fig. 46 to avoid recirculation of vent gases.

### Inducer Outlet Restrictor

The loose parts bag may contain an inducer outlet restrictor. The outlet restrictor is NOT used on these furnaces. Discard restrictor.



**Table 13 – Approved Combustion-Air and Vent Pipe, Fitting and Cement Materials (U.S.A. Installations)**

| ASTM SPECIFICATION (MARKED ON MATERIAL) | MATERIAL | PIPE | FITTINGS | SOLVENT CEMENT AND PRIMERS | DESCRIPTION |
|---|---|---|---|---|---|
| **D1527** | ABS | Pipe | — | — | Schedule–40 |
| **D1785** | PVC | Pipe | — | — | Schedule–40 |
| **D2235** | For ABS | — | — | Solvent Cement | For ABS |
| **D2241** | PVC | Pipe | — | — | SDR–21 & SDR–26 |
| **D2466** | PVC | — | Fittings | — | Schedule–40 |
| **D2468** | ABS | — | Fittings | — | Schedule–40 |
| **D2564** | For PVC | — | — | Solvent Cement | For PVC |
| **D2661** | ABS | Pipe | Fittings | — | DWV at Schedule–40 IPS sizes |
| **D2665** | PVC | Pipe | Fittings | — | DWV |
| **F438** | CPVC | — | Fittings | — | Schedule–40 |
| **F441** | CPVC | Pipe | — | — | Schedule–40 |
| **F442** | CPVC | Pipe | — | — | SDR |
| **F493** | For CPVC | — | — | Solvent Cement | For CPVC |
| **F628** | ABS | Pipe | — | — | Cellular Core DWV at Schedule–40 IPS sizes |
| **F656** | For PVC | — | — | Primer | For PVC |
| **F891** | PVC | Pipe | — | — | Cellular Core Schedule–40 & DWV |

## Table 14 – Maximum Allowable Exposed Vent Lengths Insulation Table - Ft. / M

| Maximum Length of Uninsulated and Insulated Vent Pipe-Ft (M) | | | | | | | | | | | | | | | | | |
|---|---|---|---|---|---|---|---|---|---|---|---|---|---|---|---|---|---|
| Modulating Furnace High Heat Input | Winter Design Temp °F (°C) | Pipe Length in Ft. & M | No Insulation | | | | | 3/8-in. (9.5 mm) | | | | | 1/2-in. (12.7 mm) | | | | |
| | | | Pipe Diameter-inches (mm) | | | | | Pipe Diameter-inches (mm) | | | | | Pipe Diameter-inches (mm) | | | | |
| | | | 1.5 | 2.0 | 2.5 | 3.0 | 4.0 | 1.5 | 2.0 | 2.5 | 3.0 | 4.0 | 1.5 | 2.0 | 2.5 | 3.0 | 4.0 |
| | | | (38) | (51) | (64) | (76) | (102) | (38) | (51) | (64) | (76) | (102) | (38) | (51) | (64) | (76) | (102) |
| 60000 | 20 (-10) | Ft. | 34.0 | 29.0 | 28.0 | 23.0 | N/A | 55.0 | 88.0 | 79.0 | 69.0 | N/A | 55.0 | 104.0 | 93.0 | 81.0 | N/A |
| | | M | 10.4 | 8.8 | 8.5 | 7.0 | N/A | 16.8 | 26.8 | 24.1 | 21.0 | N/A | 16.8 | 31.7 | 28.3 | 24.7 | N/A |
| | 0 (-20) | Ft. | 14.0 | 9.0 | 7.0 | 0.0 | N/A | 55.0 | 49.0 | 43.0 | 34.0 | N/A | 55.0 | 60.0 | 52.0 | 42.0 | N/A |
| | | M | 4.3 | 2.7 | 2.1 | 0.0 | N/A | 16.8 | 14.9 | 13.1 | 10.4 | N/A | 16.8 | 18.3 | 15.8 | 12.8 | N/A |
| | -20 (-30) | Ft. | 5.0 | 0.0 | 0.0 | 0.0 | N/A | 41.0 | 32.0 | 26.0 | 18.0 | N/A | 50.0 | 40.0 | 33.0 | 24.0 | N/A |
| | | M | 1.5 | 0.0 | 0.0 | 0.0 | N/A | 12.5 | 9.8 | 7.9 | 5.5 | N/A | 15.2 | 12.2 | 10.1 | 7.3 | N/A |
| | -40 (-40) | Ft. | 0.0 | 0.0 | 0.0 | 0.0 | N/A | 30.0 | 21.0 | 16.0 | 8.0 | N/A | 37.0 | 28.0 | 22.0 | 13.0 | N/A |
| | | M | 0.0 | 0.0 | 0.0 | 0.0 | N/A | 9.1 | 6.4 | 4.9 | 2.4 | N/A | 11.3 | 8.5 | 6.7 | 4.0 | N/A |
| | | | | | | | | | | | | | | | | | |
| 60600 | 20 (-10) | Ft. | 34.0 | 29.0 | 28.0 | 23.0 | N/A | 55.0 | 88.0 | 79.0 | 69.0 | N/A | 55.0 | 104.0 | 93.0 | 81.0 | N/A |
| | | M | 10.4 | 8.8 | 8.5 | 7.0 | N/A | 16.8 | 26.8 | 24.1 | 21.0 | N/A | 16.8 | 31.7 | 28.3 | 24.7 | N/A |
| | 0 (-20) | Ft. | 14.0 | 9.0 | 7.0 | 0.0 | N/A | 55.0 | 49.0 | 43.0 | 34.0 | N/A | 55.0 | 60.0 | 52.0 | 42.0 | N/A |
| | | M | 4.3 | 2.7 | 2.1 | 0.0 | N/A | 16.8 | 14.9 | 13.1 | 10.4 | N/A | 16.8 | 18.3 | 15.8 | 12.8 | N/A |
| | -20 (-30) | Ft. | 5.0 | 0.0 | 0.0 | 0.0 | N/A | 41.0 | 32.0 | 26.0 | 18.0 | N/A | 50.0 | 40.0 | 33.0 | 24.0 | N/A |
| | | M | 1.5 | 0.0 | 0.0 | 0.0 | N/A | 12.5 | 9.8 | 7.9 | 5.5 | N/A | 15.2 | 12.2 | 10.1 | 7.3 | N/A |
| | -40 (-40) | Ft. | 0.0 | 0.0 | 0.0 | 0.0 | N/A | 30.0 | 21.0 | 16.0 | 8.0 | N/A | 37.0 | 28.0 | 22.0 | 13.0 | N/A |
| | | M | 0.0 | 0.0 | 0.0 | 0.0 | N/A | 9.1 | 6.4 | 4.9 | 2.4 | N/A | 11.3 | 8.5 | 6.7 | 4.0 | N/A |
| | | | | | | | | | | | | | | | | | |
| 80000 | 20 (-10) | Ft. | 35.0 | 39.0 | 39.0 | 33.0 | 25.0 | 35.0 | 118.0 | 107.0 | 92.0 | 76.0 | 35.0 | 130.0 | 125.0 | 109.0 | 90.0 |
| | | M | 10.7 | 11.9 | 11.9 | 10.1 | 7.6 | 10.7 | 36.0 | 32.6 | 28.0 | 23.2 | 10.7 | 39.6 | 38.1 | 33.2 | 27.4 |
| | 0 (-20) | Ft. | 22.0 | 16.0 | 14.0 | 7.0 | 0.0 | 35.0 | 69.0 | 60.0 | 49.0 | 35.0 | 35.0 | 83.0 | 72.0 | 60.0 | 45.0 |
| | | M | 6.7 | 4.9 | 4.3 | 2.1 | 0.0 | 10.7 | 21.0 | 18.3 | 14.9 | 10.7 | 10.7 | 25.3 | 21.9 | 18.3 | 13.7 |
| | -20 (-30) | Ft. | 11.0 | 5.0 | 2.0 | 0.0 | 0.0 | 35.0 | 46.0 | 39.0 | 29.0 | 16.0 | 35.0 | 57.0 | 48.0 | 37.0 | 23.0 |
| | | M | 3.4 | 1.5 | 0.6 | 0.0 | 0.0 | 10.7 | 14.0 | 11.9 | 8.8 | 4.9 | 10.7 | 17.4 | 14.6 | 11.3 | 7.0 |
| | -40 (-40) | Ft. | 4.0 | 0.0 | 0.0 | 0.0 | 0.0 | 35.0 | 33.0 | 26.0 | 17.0 | 4.0 | 35.0 | 41.0 | 34.0 | 24.0 | 11.0 |
| | | M | 1.2 | 0.0 | 0.0 | 0.0 | 0.0 | 10.7 | 10.1 | 7.9 | 5.2 | 1.2 | 10.7 | 12.5 | 10.4 | 7.3 | 3.4 |
| | | | | | | | | | | | | | | | | | |
| 100000 | 20 (-10) | Ft. | N/A | 47.0 | 47.0 | 41.0 | 32.0 | N/A | 50.0 | 110.0 | 112.0 | 93.0 | N/A | 50.0 | 110.0 | 132.0 | 110.0 |
| | | M | N/A | 14.3 | 14.3 | 12.5 | 9.8 | N/A | 15.2 | 33.5 | 34.1 | 28.3 | N/A | 15.2 | 33.5 | 40.2 | 33.5 |
| | 0 (-20) | Ft. | N/A | 21.0 | 19.0 | 12.0 | 1.0 | N/A | 50.0 | 74.0 | 61.0 | 45.0 | N/A | 50.0 | 89.0 | 74.0 | 57.0 |
| | | M | N/A | 6.4 | 5.8 | 3.7 | 0.3 | N/A | 15.2 | 22.6 | 18.6 | 13.7 | N/A | 15.2 | 27.1 | 22.6 | 17.4 |
| | -20 (-30) | Ft. | N/A | 8.0 | 6.0 | 0.0 | 0.0 | N/A | 50.0 | 49.0 | 38.0 | 23.0 | N/A | 50.0 | 60.0 | 48.0 | 32.0 |
| | | M | N/A | 2.4 | 1.8 | 0.0 | 0.0 | N/A | 15.2 | 14.9 | 11.6 | 7.0 | N/A | 15.2 | 18.3 | 14.6 | 9.8 |
| | -40 (-40) | Ft. | N/A | 1.0 | 0.0 | 0.0 | 0.0 | N/A | 42.0 | 34.0 | 24.0 | 10.0 | N/A | 50.0 | 43.0 | 32.0 | 18.0 |
| | | M | N/A | 0.3 | 0.0 | 0.0 | 0.0 | N/A | 12.8 | 10.4 | 7.3 | 3.0 | N/A | 15.2 | 13.1 | 9.8 | 5.5 |
| | | | | | | | | | | | | | | | | | |
| 120000 | 20 (-10) | Ft. | N/A | N/A | 15.0 | 49.0 | 40.0 | N/A | N/A | 15.0 | 100.0 | 111.0 | N/A | N/A | 15.0 | 100.0 | 131.0 |
| | | M | N/A | N/A | 4.6 | 14.9 | 12.2 | N/A | N/A | 4.6 | 30.5 | 33.8 | N/A | N/A | 4.6 | 30.5 | 39.9 |
| | 0 (-20) | Ft. | N/A | N/A | 15.0 | 17.0 | 6.0 | N/A | N/A | 15.0 | 75.0 | 57.0 | N/A | N/A | 15.0 | 90.0 | 70.0 |
| | | M | N/A | N/A | 4.6 | 5.2 | 1.8 | N/A | N/A | 4.6 | 22.9 | 17.4 | N/A | N/A | 4.6 | 27.4 | 21.3 |
| | -20 (-30) | Ft. | N/A | N/A | 10.0 | 2.0 | 0.0 | N/A | N/A | 15.0 | 48.0 | 32.0 | N/A | N/A | 15.0 | 59.0 | 42.0 |
| | | M | N/A | N/A | 3.0 | 0.6 | 0.0 | N/A | N/A | 4.6 | 14.6 | 9.8 | N/A | N/A | 4.6 | 18.0 | 12.8 |
| | -40 (-40) | Ft. | N/A | N/A | 1.0 | 0.0 | 0.0 | N/A | N/A | 15.0 | 32.0 | 17.0 | N/A | N/A | 15.0 | 41.0 | 25.0 |
| | | M | N/A | N/A | 0.3 | 0.0 | 0.0 | N/A | N/A | 4.6 | 9.8 | 5.2 | N/A | N/A | 4.6 | 12.5 | 7.6 |

* Pipe length (ft) specified for maximum pipe lengths located in unconditioned spaces. Pipes located in unconditioned space cannot exceed total allowable pipe length calculated from Table 15 or 17.

† Insulation thickness based on R value of 3.5 per in.

*NOTE: Maximum Equivalent Vent Length (MEVL) includes standard and concentric vent termination and does NOT include elbows. Use Table 16 - Deductions from Maximum Equivalent Vent Length to determine allowable vent length for each application.*

**Table 15 – Maximum Equivalent Vent Length - Ft. (M)**
**0 to 4500 Ft. (0 to 1370 M) Altitude**

| Altitude FT (M) | Unit Size BTU/Hr | DIRECT VENT (2-PIPE) AND VENTILATED COMBUSTION AIR ONLY | | | | | | | | | |
|---|---|---|---|---|---|---|---|---|---|---|---|
| | | Vent Pipe Diameter (in.) | | | | | | | | | |
| | | 1-1/2 | | 2 | | 2-1/2 | | 3 | | 4 | |
| 0 to 2000 (0 to 610) | 60,000 | 55 | (16.8) | 135 | (41.1) | 235 | (71.6) | 265 | (80.8) | NA | |
| | 80,000 | 35 | (10.7) | 130 | (39.6) | 175 | (53.3) | 235 | (71.6) | 265 | (80.8) |
| | 100,000 | NA | | 50 | (15.2) | 110 | (33.5) | 235 | (71.6) | 265 | (80.8) |
| | 120,000 | NA | | NA | | 15 | (4.6) | 100 | (30.5) | 250 | (76.2) |
| 2001 to 3000 (610 to 914) | 60,000 | 45 | (13.7) | 127 | (38.7) | 222 | (67.7) | 250 | (76.2) | NA | |
| | 80,000 | 30 | (9.1) | 90 | (27.4) | 165 | (50.3) | 222 | (67.7) | 249 | (75.9) |
| | 100,000 | NA | | 40 | (12.2) | 104 | (31.7) | 223 | (68.0) | 250 | (76.2) |
| | 120,000 | NA | | NA | | 11 | (3.4) | 93 | (28.3) | 237 | (72.2) |
| 3001 to 4000 (914 to 1219) | 60,000 | 40 | (12.2) | 119 | (36.3) | 210 | (64.0) | 235 | (71.6) | NA | |
| | 80,000 | 25 | (7.6) | 85 | (25.9) | 155 | (47.2) | 210 | (64.0) | 232 | (70.7) |
| | 100,000 | NA | | 40 | (12.2) | 98 | (29.9) | 211 | (64.3) | 236 | (71.9) |
| | 120,000 | NA | | NA | | 8 | (2.4) | 86 | (26.2) | 224 | (68.3) |
| 4001 to 4500 (1219 to 1370) | 60,000 | 35 | (10.7) | 115 | (35.1) | 204 | (62.2) | 228 | (69.5) | NA | |
| | 80,000 | 23 | (7.0) | 85 | (25.9) | 150 | (45.7) | 202 | (61.6) | 224 | (68.3) |
| | 100,000 | NA | | 40 | (12.2) | 94 | (28.7) | 205 | (62.5) | 229 | (69.8) |
| | 120,000 | NA | | NA | | NA | | 83 | (25.3) | 217 | (66.1) |

* See notes at end of venting tables.
*See Table 17 for altitudes over 4500 ft. (1370 M)

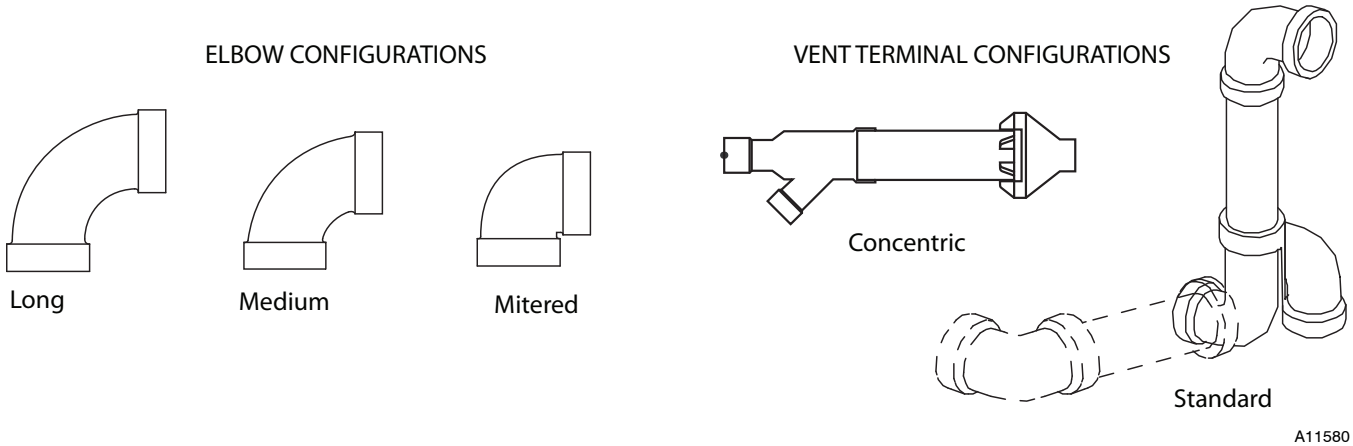


**Table 16 – Deductions from Maximum Equivalent Vent Length - Ft. (M)**

| Pipe Diameter (in): | 1-1/2 | | 2 | | 2-1/2 | | 3 | | 4 | |
|---|---|---|---|---|---|---|---|---|---|---|
| Mitered 90° Elbow | 8 | (2.4) | 8 | (2.4) | 8 | (2.4) | 8 | (2.4) | 8 | (2.4) |
| Medium Radius 90° Elbow | 5 | (1.5) | 5 | (1.5) | 5 | (1.5) | 5 | (1.5) | 5 | (1.5) |
| Long Radius 90° Elbow | 3 | (0.9) | 3 | (0.9) | 3 | (0.9) | 3 | (0.9) | 3 | (0.9) |
| Mitered 45° Elbow | 4 | (1.2) | 4 | (1.2) | 4 | (1.2) | 4 | (1.2) | 4 | (1.2) |
| Medium Radius 45° Elbow | 2.5 | (0.8) | 2.5 | (0.8) | 2.5 | (0.8) | 2.5 | (0.8) | 2.5 | (0.8) |
| Long Radius 45° Elbow | 1.5 | (0.5) | 1.5 | (0.5) | 1.5 | (0.5) | 1.5 | (0.5) | 1.5 | (0.5) |
| Tee | 16 | (4.9) | 16 | (4.9) | 16 | (4.9) | 16 | (4.9) | 16 | (4.9) |
| Concentric Vent Termination | NA | | 0 | (0.0) | NA | | 0 | (0.0) | NA | |
| Standard Vent Termination | 0 | (0.0) | 0 | (0.0) | 0 | (0.0) | 0 | (0.0) | 0 | (0.0) |

## Venting System Length Calculations

The Total Equivalent Vent Length (TEVL) for **EACH** combustion air or vent pipe equals the length of the venting system, plus the equivalent length of elbows used in the venting system from Table 16.

Standard vent terminations or factory accessory concentric vent terminations count for zero deduction.

See vent system manufacturer's data for equivalent lengths of flexible vent pipe or other termination systems. **DO NOT ASSUME** that one foot of flexible vent pipe equals one foot of straight PVC/ABS DWV vent pipe.

Compare the Total Equivalent Vent Length to the Maximum Equivalent Vent Lengths in Tables 15 and 17.

## Example 1

A direct-vent 60,000 Btuh furnace installed at 2100 ft. (640 M). Venting system includes, **FOR EACH PIPE**, 100 feet (30 M) of vent pipe, 95 feet (28 M) of combustion air inlet pipe, (3) 90° long radius elbows, (2) 45° long radius elbows and a factory accessory concentric vent kit.

Can this application use 2-in. (50 mm ND) PVC/ABS DWV vent piping?

| | | | | | | |
|---|---|---|---|---|---|---|
| Measure the required linear length of air inlet and vent pipe; insert the longest of the two here: | | | | | 100 ft | Use length of the longer of the vent or air inlet piping system |
| Add equiv length of (3) 90° long-radius elbows (use the highest number of elbows for either the vent or inlet pipe) | 3 | x | 3 ft | = | 9 ft. | From Table 16 |
| Add equiv length of (2) 45° long-radius elbows (use the highest number of elbows for either the vent or inlet pipe) | 2 | x | 1.5 ft | = | 3 ft. | From Table 16 |
| Add equiv length of vent termination | | | | | 0 ft. | From Table 16 |
| Add correction for flexible vent pipe, if any | | | | | 0 ft. | From Vent Manufacturer's instructions; zero for PVC/ABS DWV |
| Total Equivalent Vent Length (TEVL) | | | | | 112 ft. | Add all of the above lines |
| | | | | | | |
| Maximum Equivalent Vent Length (MEVL) | | | | | 127 ft. | For 2" pipe from Table 15 |
| **Is TEVL less than MEVL?** | | | | | **YES** | **Therefore, 2" pipe may be used** |

## Example 2

A direct-vent 60,000 Btuh furnace installed at 2100 ft. (640 M) Venting system includes, **FOR EACH PIPE**, 100 feet (30 M) of vent pipe, 95 feet (28 M) of combustion air inlet pipe, (3) 90° long radius elbows, and a polypropylene concentric vent kit. Also includes 20 feet (6 M) of flexible polypropylene vent pipe, included within the 100 feet (30 M) of vent pipe.

Assume that one meter of flexible 60 mm or 80 mm polypropylene pipe equals 1.8 meters of PVC/ABS pipe. **VERIFY FROM VENT MANUFACTURER'S INSTRUCTIONS.**

Can this application use 60 mm (O.D.) polypropylene vent piping? If not what size piping can be used?

| | | | | | | |
|---|---|---|---|---|---|---|
| Measure the required linear length of air inlet and vent pipe; insert the longest of the two here: | | | | | 100 ft | Use length of the longer of the vent or air inlet piping system |
| Add equiv length of (3) 90° long-radius elbows (use the highest number of elbows for either the vent or inlet pipe) | 3 | x | 3 ft | = | 9 ft. | From Vent Manufacturer's instructions |
| Add equiv length of (2) 45° long-radius elbows (use the highest number of elbows for either the vent or inlet pipe) | 0 | x | | = | 0 ft. | From Vent Manufacturer's instructions |
| Add equiv length of of vent termination | 9 M | x | 3 ft/M | = | 18 ft. | From Vent Manufacturer's instructions |
| Add correction for flexible vent pipe, if any | 1.8 | x | 20 ft | = | 36 ft. | From Vent Manufacturer's instructions |
| Total Equivalent Vent Length (TEVL) | | | | | 163 ft. | Add all of the above lines |
| | | | | | | |
| Maximum Equivalent Vent Length (MEVL) | | | | | 127 ft. | For 2" pipe from Table 15 |
| **Is TEVL less than MEVL?** | | | | | **NO** | **Therefore, 60mm pipe may NOT be used; try 80 mm** |
| | | | | | | |
| Maximum Equivalent Vent Length (MEVL) | | | | | 250 ft. | For 3" pipe from Table 15 |
| **Is TEVL less than MEVL?** | | | | | **YES** | **Therefore, 80 mm pipe may be used** |

*NOTE: Maximum Equivalent Vent Length (MEVL) includes standard and concentric vent termination and does NOT include elbows. Use Table 16 - Deductions from Maximum Equivalent Vent Length to determine allowable vent length for each application.*

**Table 17 – Maximum Equivalent Vent Length - Ft. (M)**
**4501 to 10,000 Ft. (0 to 1370 M) Altitude**

| Altitude FT (M) | Unit Size | DIRECT VENT (2-PIPE) AND VENTILATED COMBUSTION AIR ONLY | | | | | | | | | |
|---|---|---|---|---|---|---|---|---|---|---|---|
| | | Vent Pipe Diameter | | | | | | | | | |
| | | 1-1/2 | | 2 | | 2-1/2 | | 3 | | 4 | |
| 4501 to 5000 (1370 to 1524) | 60,000 | 35 | (10.7) | 111 | (33.8) | 198 | (60.4) | 221 | (67.4) | NA | |
| | 80,000 | 23 | (7.0) | 85 | (25.9) | 146 | (44.5) | 195 | (59.4) | 216 | (65.8) |
| | 100,000 | NA | | 40 | (12.2) | 91 | (27.7) | 200 | (61.0) | 222 | (67.7) |
| | 120,000 | NA | | NA | | NA | | 80 | (24.4) | 211 | (64.3) |
| 5001 to 6000 (1524 to 1829) | 60,000 | 37 | (11.3) | 103 | (31.4) | 186 | (56.7) | 207 | (63.1) | NA | |
| | 80,000 | 22 | (6.7) | 76 | (23.2) | 137 | (41.8) | 183 | (55.8) | 200 | (61.0) |
| | 100,000 | NA | | 33 | (10.1) | 85 | (25.9) | 188 | (57.3) | 208 | (63.4) |
| | 120,000 | NA | | NA | | NA | | 74 | (22.6) | 199 | (60.7) |
| 6001 to 7000 (1829 to 2134) | 60,000 | 35 | (10.7) | 96 | (29.3) | 174 | (53.0) | 194 | (59.1) | NA | |
| | 80,000 | 20 | (6.1) | 71 | (21.6) | 120 | (36.6) | 171 | (52.1) | 185 | (56.4) |
| | 100,000 | NA | | 31 | (9.4) | 79 | (24.1) | 178 | (54.3) | 195 | (59.4) |
| | 120,000 | NA | | NA | | NA | | 68 | (20.7) | 187 | (57.0) |
| 7001 to 8000 (2134 to 2438) | 60,000 | 32 | (9.8) | 89 | (27.1) | 163 | (49.7) | 181 | (55.2) | NA | |
| | 80,000 | 18 | (5.5) | 66 | (20.1) | 120 | (36.6) | 159 | (48.5) | 170 | (51.8) |
| | 100,000 | NA | | 29 | (8.8) | 73 | (22.3) | 167 | (50.9) | 182 | (55.5) |
| | 120,000 | NA | | NA | | NA | | 62 | (18.9) | 175 | (53.3) |
| 8001 to 9000 (2438 to 2743) | 60,000 | 30 | (9.1) | 82 | (25.0) | 152 | (46.3) | 168 | (51.2) | NA | |
| | 80,000 | 17 | (5.2) | 62 | (18.9) | 111 | (33.8) | 148 | (45.1) | 156 | (47.5) |
| | 100,000 | NA | | 27 | (8.2) | 67 | (20.4) | 157 | (47.9) | 170 | (51.8) |
| | 120,000 | NA | | NA | | NA | | 56 | (17.1) | 164 | (50.0) |
| 9001 to 10,000 (2743 to 3048) | 60,000 | 27 | (8.2) | 76 | (23.2) | 142 | (43.3) | 156 | (47.5) | NA | |
| | 80,000 | 15 | (4.6) | 57 | (17.4) | 103 | (31.4) | 137 | (41.8) | 142 | (43.3) |
| | 100,000 | NA | | 24 | (7.3) | 62 | (18.9) | 147 | (44.8) | 157 | (47.9) |
| | 120,000 | NA | | NA | | NA | | 51 | (15.5) | 153 | (46.6) |

**Notes:**

1. Use only the vent pipe sizes shown for each furnace. It is NOT necessary to choose the smallest diameter pipe possible for venting.
2. NA – Not allowed. Pressure switch will not close, or flame disturbance may result.
3. Vent sizing for Canadian installations over 4500 ft. (1370 M) above sea level are subject to acceptance by the local authorities having jurisdiction.
4. Size both the combustion air and vent pipe independently, then use the larger size for both pipes.
5. Assume the two 45° elbows equal one 90° elbow. Wide radius elbows are desirable and may be required in some cases.
6. Elbow and pipe sections within the furnace casing and at the vent termination should not be included in vent length or elbow count.
7. The minimum pipe length is 5 ft. (2 M) linear feet (meters) for all applications.
8. Use 3–in. (76 mm) diameter vent termination kit for installations requiring 4–in. (102 mm) diameter pipe.

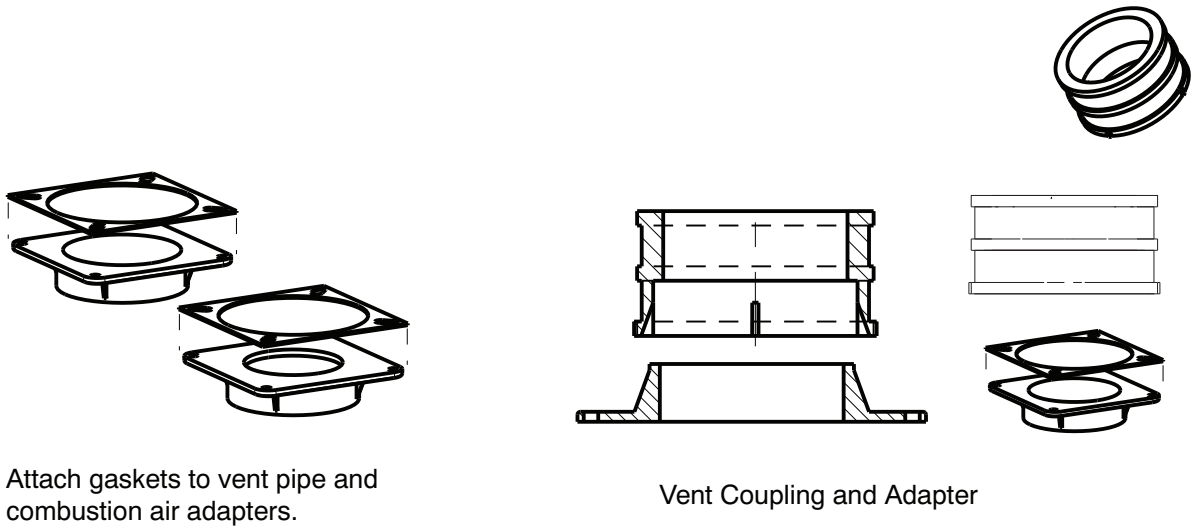


**Fig. 36 - Vent Coupling and Adapter with Gaskets**

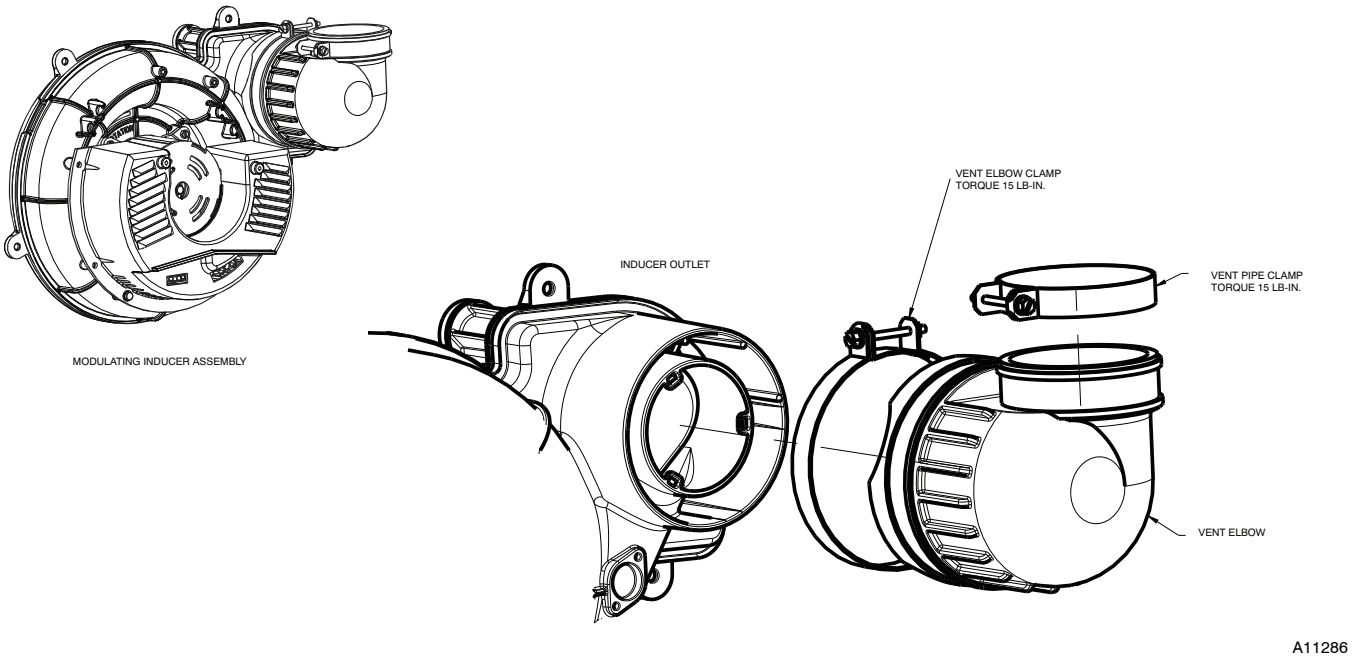


**Fig. 37 - Inducer Vent Elbow (Appearance May Vary)**

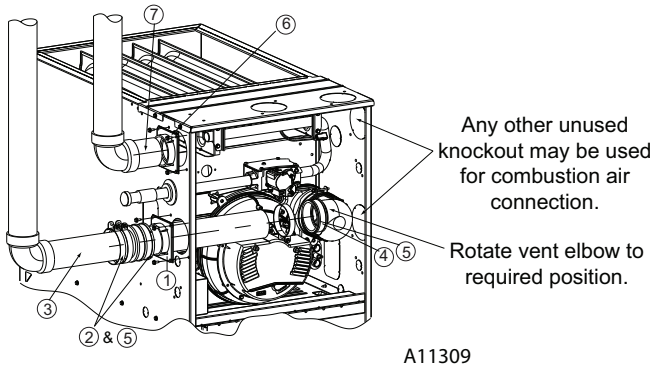


UPFLOW LEFT CONFIGURATION

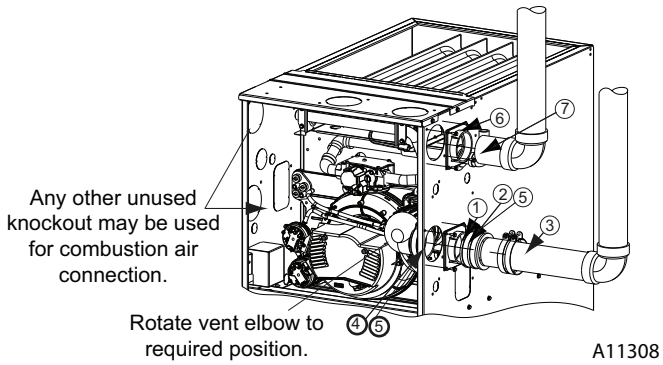


UPFLOW RIGHT CONFIGURATION

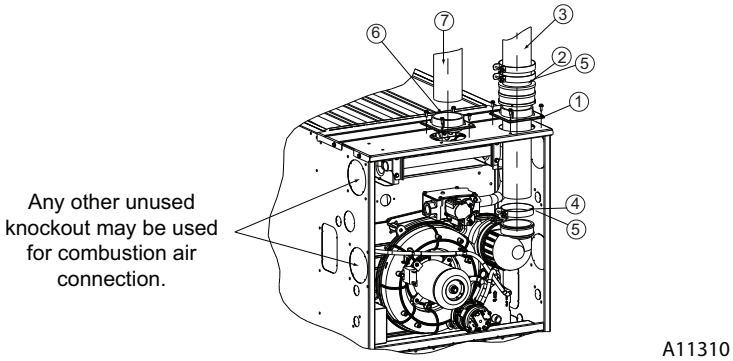


UPFLOW VERTICAL VENT

1. Attach vent pipe adapter with gasket to furnace casing.
2. Align notches in rubber coupling over standoffs on adapter. Slide clamps over the coupling.
3. Slide vent pipe through adapter and coupling into vent elbow.
4. Insert vent pipe into vent elbow.
5. Torque all clamps 15 lb.-in.
6. Attach combustion air pipe adapter with gasket to furnace.
7. Attach combustion air pipe to adapter with silicone. Pilot drill a 1/8-in. hole in adapter and secure with a #7 x 1/2-in sheet metal screw.

A11399

**Fig. 38 - Upflow Configurations (Appearance May Vary)**

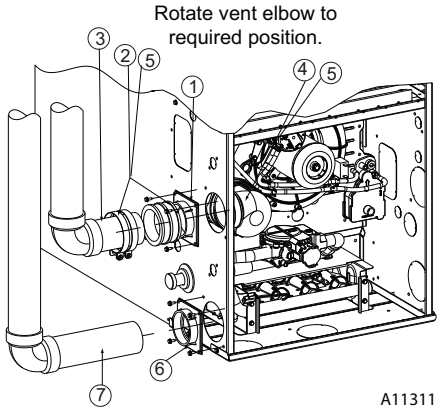


DOWNFLOW LEFT CONFIGURATION

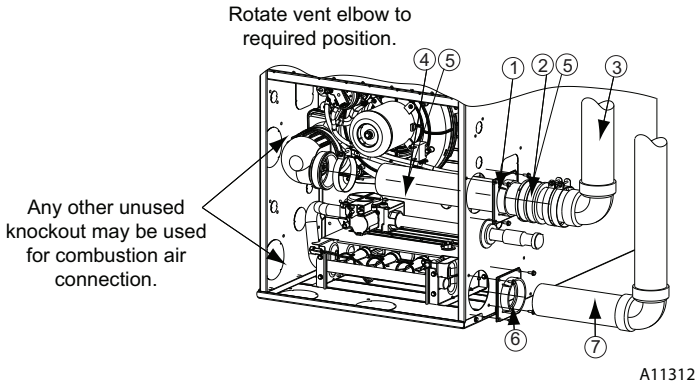


DOWNFLOW RIGHT CONFIGURATION

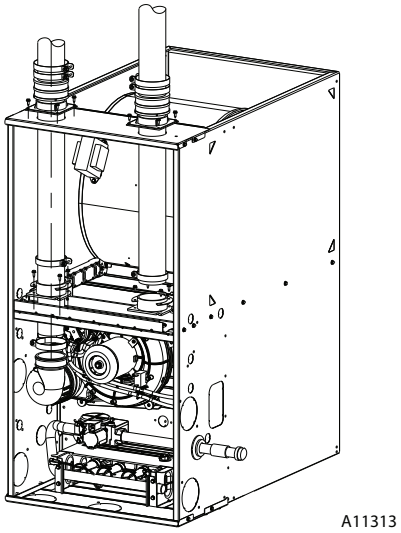


## Downflow Vertical

Requires Accessory Internal Vent Kit.
See Product Data for current kit number.

1. Attach vent pipe adapter with gasket to furnace casing.
2. Align notches in rubber coupling over standoffs on adapter. Slide clamps over the coupling.
3. Slide vent pipe through adapter and coupling into vent elbow.
4. Insert vent pipe into vent elbow.
5. Torque all clamps 15 lb.-in.
6. Attach combustion air pipe adapter with gasket to furnace.
7. Attach combustion air pipe to adapter with silicone. Pilot drill a 1/8-in. hole in adapter and secure with a #7 x 1/2-in sheet metal screw.

A11400

**Fig. 39 - Downflow Configurations (Appearance May Vary)**

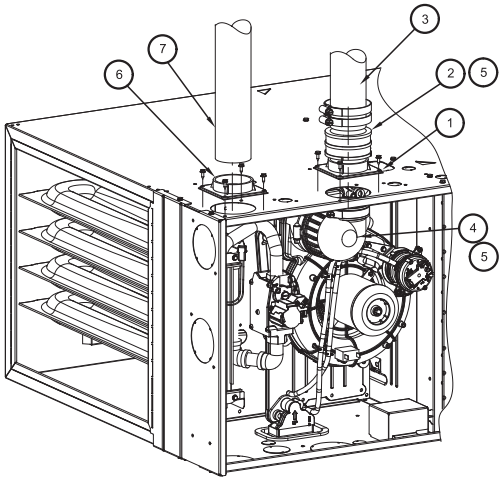


A11327

HORIZONTAL LEFT -
VERTICAL VENT CONFIGURATION

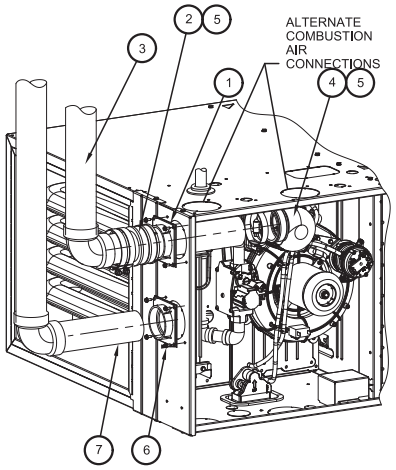


A11328

HORIZONTAL LEFT -
LEFT VENT CONFIGURATION

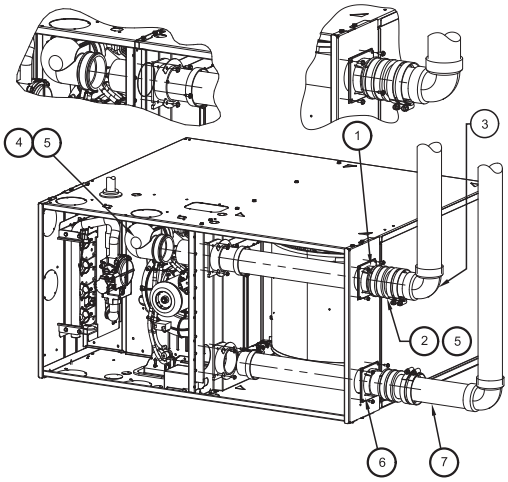


A11329

HORIZONTAL LEFT -
RIGHT VENT CONFIGURATION*
*Requires Accessory Internal Vent Kit
See Product Data for Current Kit Number

1. Attach vent pipe adapter with gasket to furnace casing.
2. Align notches in rubber coupling over standoffs on adapter. Slide clamps over the coupling.
3. Slide vent pipe through adapter and coupling into vent elbow.
4. Insert vent pipe into vent elbow.
5. Torque all clamps 15 lb.-in.
6. Attach combustion air pipe adapter with gasket to furnace.
7. Attach combustion air pipe to adapter with silicone. Pilot drill a 1/8-in. hole in adapter and secure with a #7 x 1/2-in sheet metal screw.

A11340

**Fig. 40 - Horizontal Left (Appearance May Vary)**

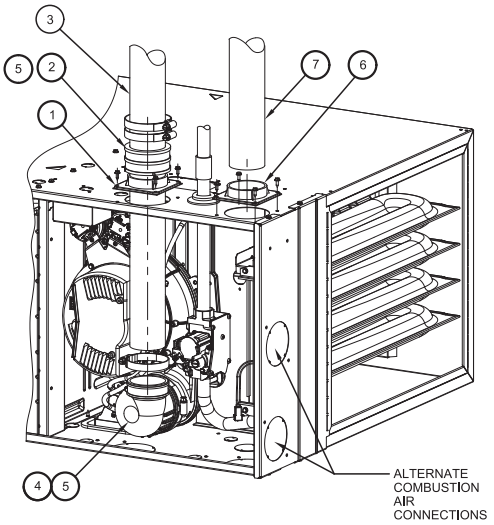


A11337

HORIZONTAL RIGHT -
VERTICAL VENT CONFIGURATION

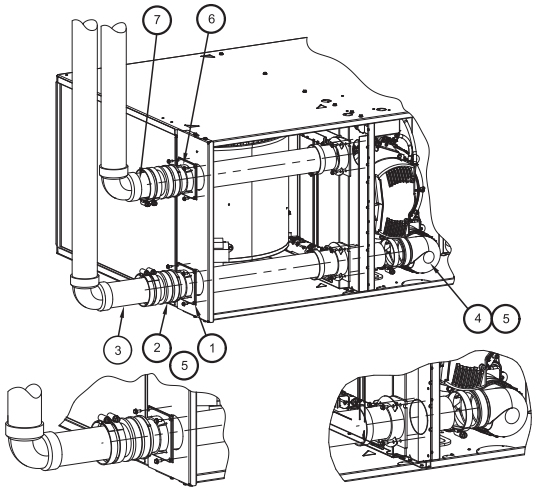


A11336

HORIZONTAL RIGHT -
LEFT VENT CONFIGURATION*
*Requires Internal Vent Kit
See Product Data for Current Kit Number

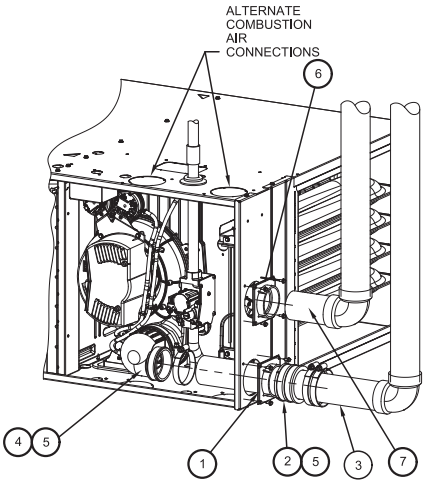


A11335

HORIZONTAL RIGHT -
RIGHT VENT CONFIGURATION

1. Attach vent pipe adapter with gasket to furnace casing.
2. Align notches in rubber coupling over standoffs on adapter. Slide clamps over the coupling.
3. Slide vent pipe through adapter and coupling into vent elbow.
4. Insert vent pipe into vent elbow.
5. Torque all clamps 15 lb.-in.
6. Attach combustion air pipe adapter with gasket to furnace.
7. Attach combustion air pipe to adapter with silicone. Pilot drill a 1/8-in. hole in adapter and secure with a #7 x 1/2-in sheet metal screw.

A11341

**Fig. 41 - Horizontal Right (Appearance May Vary)**

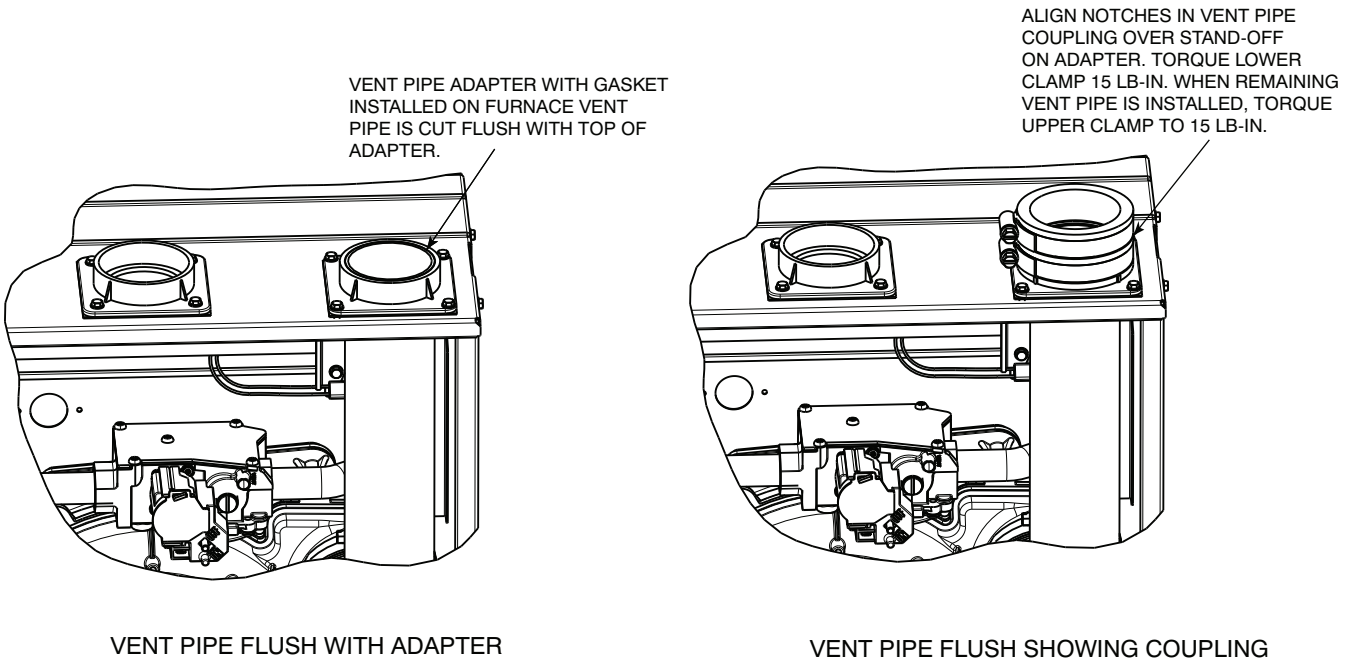


A11339

**Fig. 42 - Vent Pipe Flush with Adaptor**

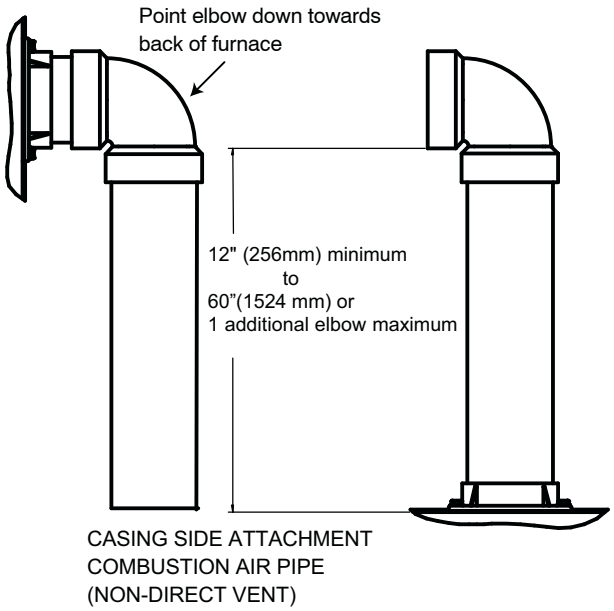


L12F042

**Fig. 43 - Combustion Air Pipe Attachment**

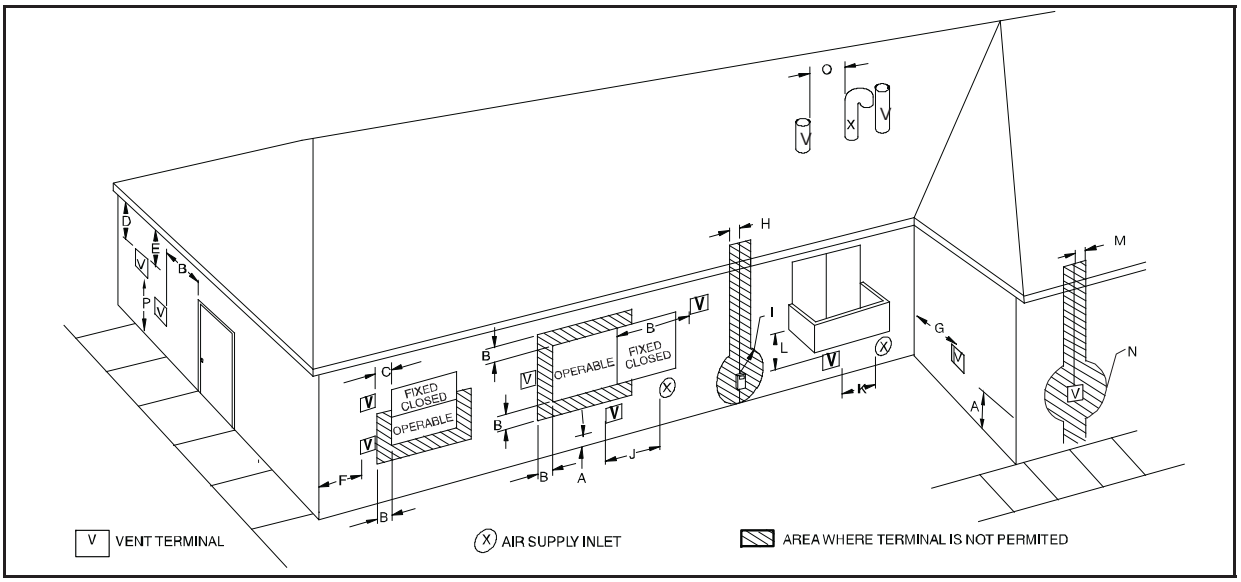


A12326

**NOTE**: The following is based upon National codes for gas appliances and is provided as a reference. Refer to local codes which may supersede these standards and/or recommendations.

| Item | Clearance Description | Canadian Installations (1) (per CAN/CSA B149.1) | U.S. Installations (2) (per ANSI Z223.1/NFPA 54) |
|---|---|---|---|
| A | Clearance above grade, veranda, porch, deck, balcony or anticipated snow level | 12 in. (305 mm)<br>18 in. (457 mm) above roof surface. | 12 in. (305 mm) |
| B | Clearance to a window or door that may be opened | 12 in. (305 mm) for appliances >10,000 Btuh (3 kW) and </=100,000 Btuh ( 30 kW),<br>36 in. (914 mm) for appliances >100,000 Btuh (30 kW) | 9 in. (229 mm) for appliances >10,000 Btuh (3 kW) and </= 50,000 Btuh ( 15 kW),<br>12 in. (305 mm) for appliances >50,000 Btuh (15kW) |
| C | Clearance to a permanently closed window | For clearances not specified in ANSI Z223.1/NFPA 54 or CAN/CSA B149.1, clearances shall be in accordance with local installation codes and the requirements of the gas supplier and the manufacturer's installation instructions.<br><br>Manufacturer's Recommendation: See Notes 3-8. | |
| D | Vertical clearance to a ventilated soffit located above the terminal within a horizontal distance of 2 feet (61 cm) from the centerline of the terminal | | |
| E | Clearance to an unventilated soffit | | |
| F | Clearance to an outside corner | | |
| G | Clearance to an inside corner | | |
| H | Clearance to each side of the centerline extended above electrical meter or gas service regulator assembly | 3 ft. (.9 M) within 15 ft. (4.6 M) above the meter/regulator assembly. | 3 ft. (.9 M) within 15 ft. (4.6 M) above the meter/regulator assembly. |
| I | Clearance to service regulator vent outlet | 3ft. (.9 M) | See Note 4. |
| J | Clearance to non—mechanical air supply inlet to building or the combustion air inlet to any other appliance | 12 in. (305 mm) for appliances >10,000 Btuh(3 kW) and </= 100,000 Btuh ( 30 kW),<br>36 in. (914 mm) for appliances >100,000 Btuh (30 kW) | 9 in. (9 mm) for appliances >10,000 Btuh (3 kW) and </= 50,000 Btuh (15 kW),<br>12 in.(305 mm) for appliances >50,000 Btuh (15kW) |
| K | Clearance to a mechanical air supply inlet | 6 ft. (1.8 M) | 3ft. (.9 M) |
| L | Clearance under a veranda, porch, deck, or balcony | 12 in. (305 mm).<br>Permitted only if veranda, porch, deck, or balcony is fully open on a minimum of two sides beneath the floor. | See Note 4.<br><br>Manufacturer's Recommendation: See Notes 3-8. |
| M | Clearance to each side of the centerline extended above or below vent terminal of the furnace to a dryer or water heater vent, or other appliance's direct vent intake or exhaust | 12 in. (305 mm) | 12 in. (305 mm) |
| N | Inlet air clearance to a moisture exhaust duct (dryer vent, spa exhaust, etc.) | 3 ft. (.9 M) | 3 ft. (.9 M) |
| 0 | Clearance from a plumbing vent stack | 3 ft. (.9 M) | 3 ft. (.9 M) |
| P | Clearance above paved sidewalk or paved driveway located on public property | 7 ft. (2.1 M)<br>Vent shall not terminate above a sidewalk or paved driveway that is located between two single family dwellings and serves both dwellings. | See Note 4.<br><br>Manufacturer's Recommendation: See Notes 3-8. |

> greater than, ≥ greater than or equal to, < less than, ≤ less than or equal to

Notes:

1 In accordance with the current CAN/CSA B149.1, Natural Gas and Propane Installation Code.

2 In accordance with the current ANSI Z223.1/NFPA 54, National Fuel Gas Code

3 ***NOTE: This table is based upon National codes for gas appliances, and are provided as a reference. Refer to Local codes which may supersede these standards and/or recommendations.***

4 For clearances not specified in ANSI Z223.1/NFPA 54 or CAN/CSA B 149.1, clearances shall be in accordance with local installation codes and the requirements of the gas supplier and the manufacturer's installation instructions.

5 When locating vent terminations, consideration must be given to prevailing winds, location, and other conditions which may cause recirculation of the combustion products of adjacent vents. Recirculation can cause poor combustion, inlet condensate problems, and accelerated corrosion of the heat exchangers.

6 Design and position vent outlets to avoid ice build-up on and moisture damage to surrounding surfaces.

7 The vent for this appliance shall not terminate:

a. Near soffit vents of crawl space vents or other areas where condensate or vapor could create a nuisance or hazard or property damage; or

b. Where condensate vapor could cause damage or could be detrimental to the operation of regulators, relief valves, or other equipment.

8 Avoid venting under a deck or large overhang. Recirculation could occur and cause performance or system problems. Ice build-up may occur.

**Fig. 44 - Direct Vent Termination Clearance**

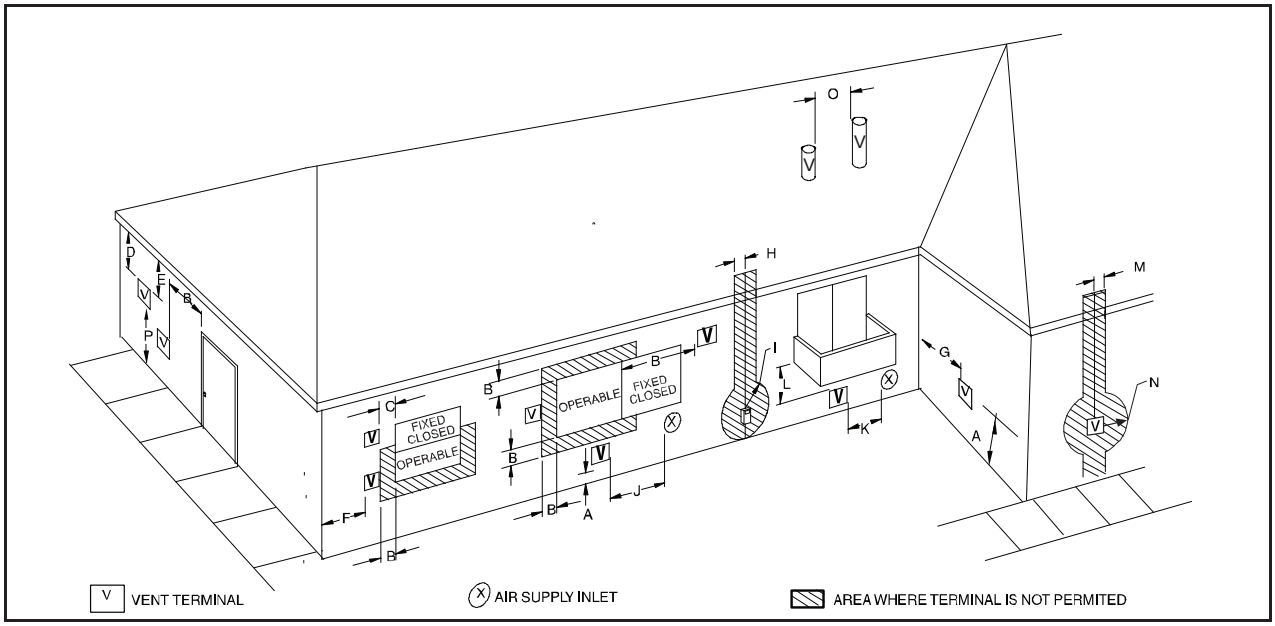


A12325

**NOTE**: The following is based upon National codes for gas appliances and is provided as a reference. Refer to local codes which may supersede these standards and/or recommendations.

| Item | Clearance Description | Canadian Installations (1) (per CAN/CSA B149.1) | U.S. Installations (2) (per ANSI Z223.1/NFPA 54) |
|---|---|---|---|
| A | Clearance above grade, veranda, porch, deck, balcony or anticipated snow level | 12 in. (305 mm)<br>18 in. (457 mm) above roof surface. | 12 in. (305 mm) |
| B | Clearance to a window or door that may be opened | 12 in. (305 mm) for appliances >10,000 Btuh (3 kW) and </=100,000 Btuh ( 30 kW),<br>36 in. (914 mm) for appliances >100,000 Btuh (30 kW) | 4ft. (1.2M) below or to the side of the opening,<br>1 ft (.3M) above the opening.<br>Manufacturer's Recommendation: See Note 8. |
| C | Clearance to a permanently closed window | For clearances not specified in ANSI Z223.1/NFPA 54 or CAN/CSA B149.1, clearances shall be in accordance with local installation codes and the requirements of the gas supplier and the manufacturer's installation instructions.<br><br>Manufacturer's Recommendation: See Notes 3-8. | |
| D | Vertical clearance to a ventilated soffit located above the terminal within a horizontal distance of 2 feet (61 cm) from the centerline of the terminal | | |
| E | Clearance to an unventilated soffit | | |
| F | Clearance to an outside corner | | |
| G | Clearance to an inside corner | | |
| H | Clearance to each side of the centerline extended above electrical meter or gas service regulator assembly | 3 ft. (.9 M) within 15 ft. (4.6 M) above the meter/regulator assembly. | 3 ft. (.9 M) within 15 ft. (4.6 M) above the meter/regulator assembly. |
| I | Clearance to service regulator vent outlet | 3ft. (.9 M) | See Note 4. |
| J | Clearance to non—mechanical air supply inlet to building or the combustion air inlet to any other appliance | 12 in. (305 mm) for appliances >10,000 Btuh(3 kW) and </= 100,000 Btuh ( 30 kW),<br>36 in. (914 mm) for appliances >100,000 Btuh (30 kW) | 4ft. (1.2M) below or to the side of the opening,<br>1 ft (.3M) above the opening.<br>Manufacturer's Recommendation: See Note 8 |
| K | Clearance to a mechanical air supply inlet | 6 ft. (1.8 M) | 3ft. (.9 M) |
| L | Clearance under a veranda, porch, deck, or balcony | 12 in. (305 mm).<br>Permitted only if veranda, porch, deck, or balcony is fully open on a minimum of two sides beneath the floor. | See Note 4.<br><br>Manufacturer's Recommendation: See Notes 3-8. |
| M | Clearance to each side of the centerline extended above or below vent terminal of the furnace to a dryer or water heater vent, or other appliance's direct vent intake or exhaust | 12 in. (305 mm) | 12 in. (305 mm) |
| N | Inlet air clearance to a moisture exhaust duct (dryer vent, spa exhaust, etc.) | 3 ft. (.9 M) | 3 ft. (.9 M) |
| 0 | Clearance from a plumbing vent stack | 3 ft. (.9 M) | 3 ft. (.9 M) |
| P | Clearance above paved sidewalk or paved driveway located on public property | 7 ft. (2.1 M).<br>Vent shall not terminate above a sidewalk or paved driveway that is located between two single-family dwellings and serves both dwellings. | 7ft. (2.1M) |

> greater than, ≥ greater than or equal to, < less than, ≤ less than or equal to

Notes:

1 In accordance with the current CAN/CSA B149.1, Natural Gas and Propane Installation Code.

2 In accordance with the current ANSI Z223.1/NFPA 54, National Fuel Gas Code

3 ***NOTE: This table is based upon National codes for gas appliances, and are provided as a reference. Refer to Local codes which may supersede these standards and/or recommendations.***

4 For clearances not specified in ANSI Z223.1/NFPA 54 or CAN/CSA B 149.1, clearances shall be in accordance with local installation codes and the requirements of the gas supplier and the manufacturer's installation instructions.

5 When locating vent terminations, consideration must be given to prevailing winds, location, and other conditions which may cause recirculation of the combustion products of adjacent vents. Recirculation can cause poor combustion, inlet condensation problems, and/or accelerated corrosion of the heat exchangers.

6 Design and position vent outlets to avoid ice build-up on and moisture damage to surrounding surfaces.

7 The vent for this appliance shall not terminate:

a. Near soffit vents of crawl space vents or other areas where condensate or vapor could create a nuisance or hazard or property damage; or

b. Where condensate vapor could cause damage or could be detrimental to the operation of regulators, relief valves, or other equipment.

8 These National standards apply to all non-direct-vent gas appliances. Contact Local code officials for additional requirements and/or exclusions.

**Fig. 45 - Ventilated Combustion Air and Non-Direct Vent Termination Clearance**

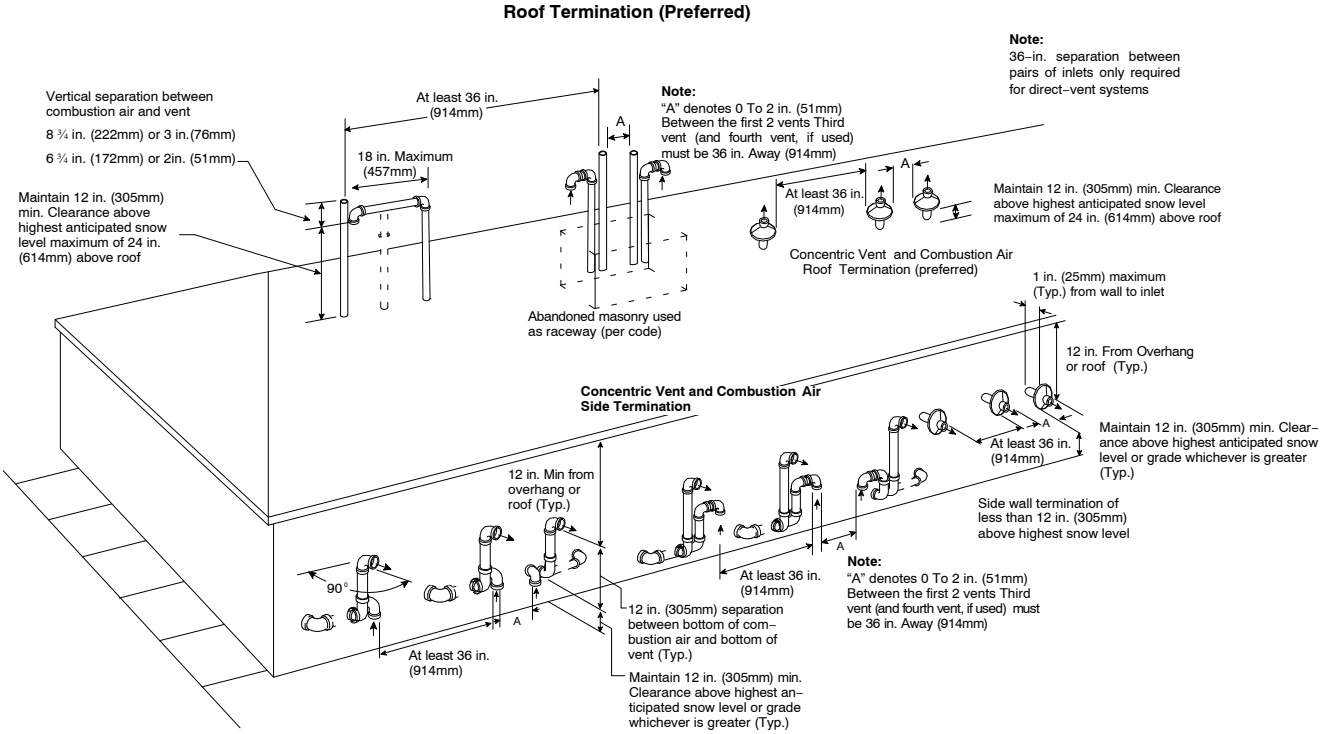


**Fig. 46 - Combustion Air and Vent Pipe Termination for Direct Vent (2-Pipe) System**

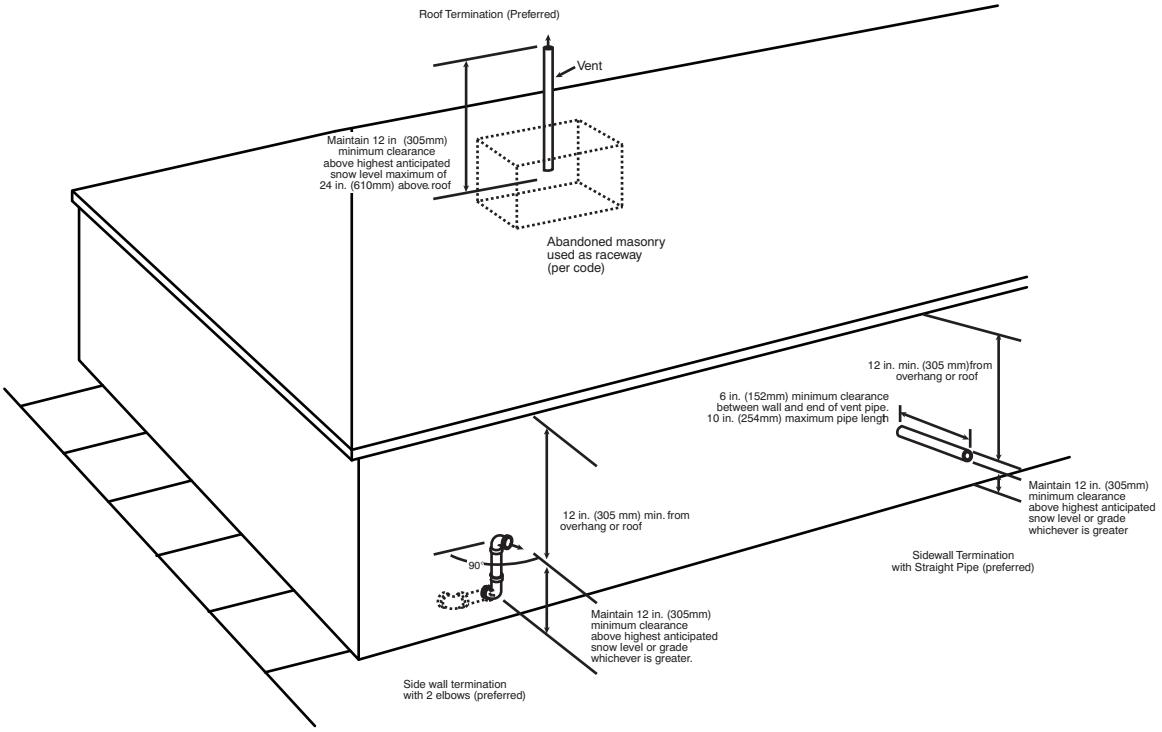


**Fig. 47 - Vent Pipe Termination for Non-Direct Vent and Ventilated Combustion Air System**

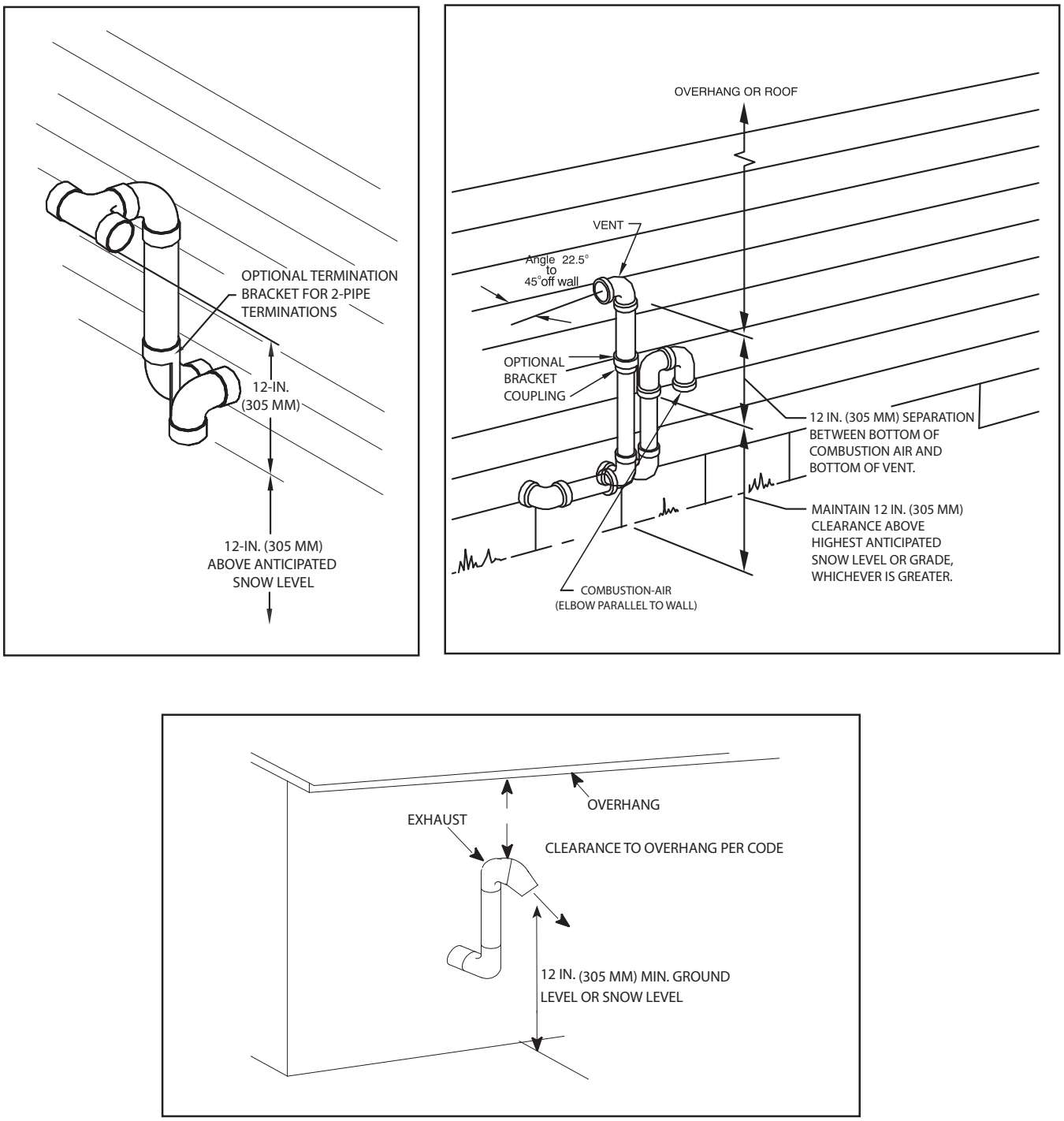


**Fig. 48 - Alberta and Saskatchewan Vent Termination**

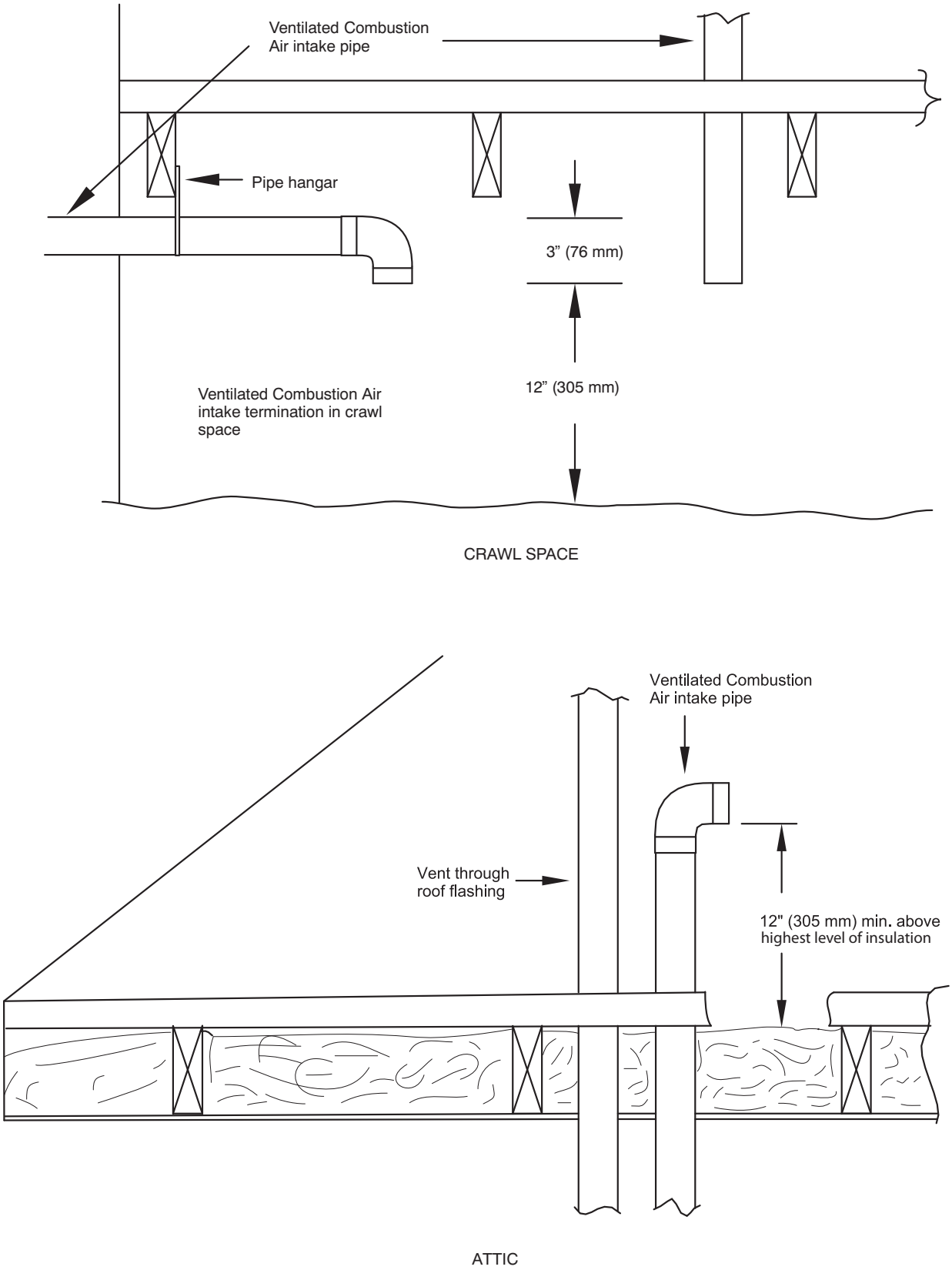


**Fig. 49 - Vent Terminations for Ventilated Combustion Air**

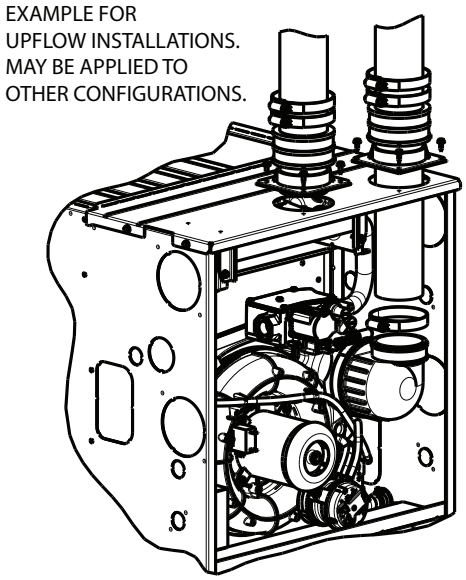


A12220

**Fig. 50 - Sample Inlet Air Pipe Connection for Polypropylene Venting Systems**



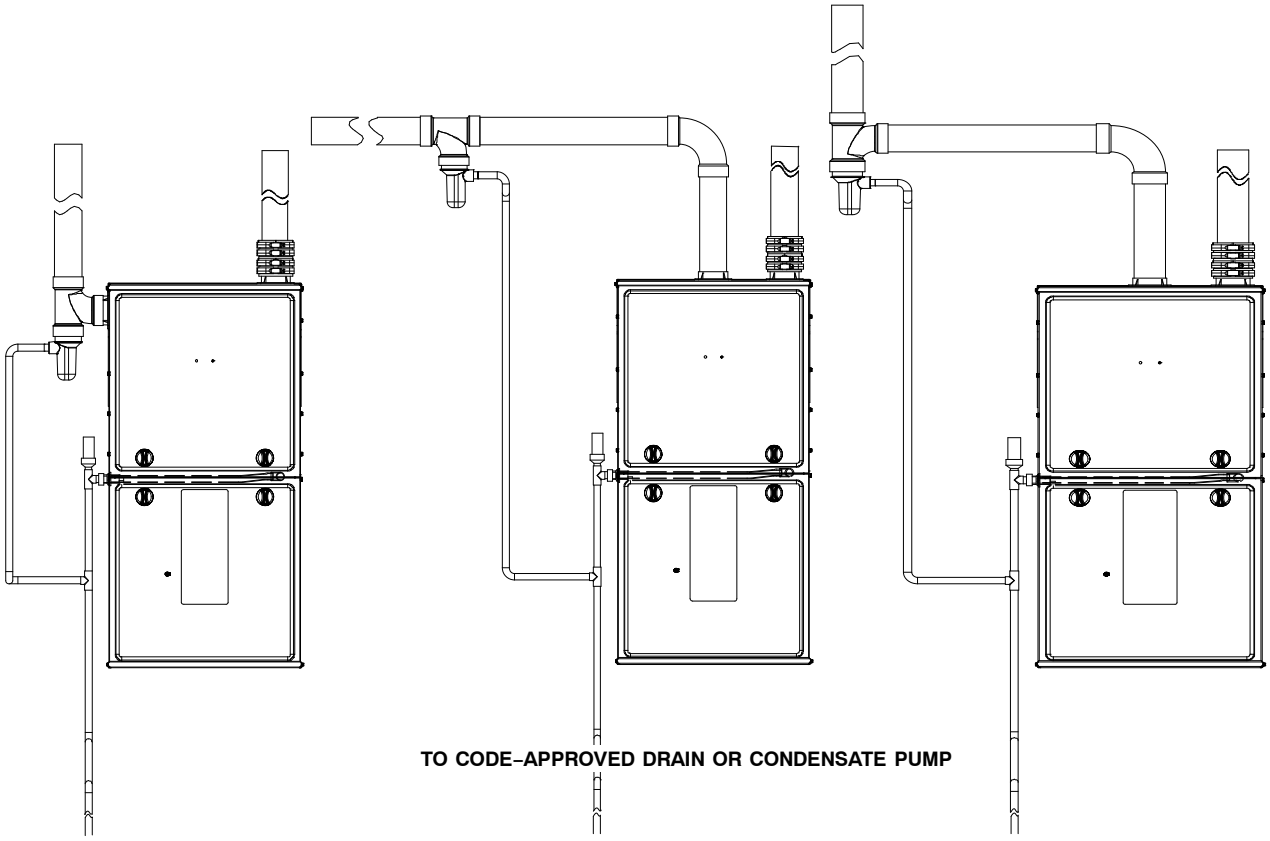


Representative drawing only, some models may vary in appearance

L12F028

**Fig. 51 - Optional Combustion Air Inlet Moisture Trap**

# START-UP, ADJUSTMENT, AND SAFETY CHECK

## General

1. Furnace must have a 115-v power supply properly connected and grounded.

**NOTE**: Proper polarity must be maintained for 115-v wiring. Control status indicator light flashes rapidly and furnace does not operate if polarity is incorrect or if furnace is not grounded.

2. Thermostat wire connections at terminals R, W/W1, G, and Y/Y2 must be made at 24-v terminal block on furnace control. See communicating wall control instructions for proper wiring of communicating controls.
3. Natural gas service pressure must not exceed 0.5 psig (14-in. w.c., 350 Pa), but must be no less than 0.16 psig (4.5-in. w.c., 1125 Pa).
4. Blower door must be in place to complete 115-v electrical circuit and supply power to the furnace components.

**⚠ CAUTION**

**UNIT OPERATION HAZARD**

Failure to follow this caution may result in intermittent unit operation or performance dissatisfaction.

These furnaces are equipped with a manual reset limit switch in burner assembly. This switch opens and shuts off power to the gas valve if an overheat condition (flame rollout) occurs in the burner assembly/enclosure. Correct inadequate combustion-air supply, improper gas pressure setting, improper burner or gas orifice positioning, or improper venting condition before resetting switch. DO NOT jumper this switch.

Before operating furnace, check flame rollout manual reset switch for continuity. If necessary, press button to reset switch.

EAC-1 terminal is energized whenever blower operates, HUM terminal is only energized when blower is energized in heating.

## Setup Switches

There are 4 sets of setup switches on the furnace control board. These switches configure the furnace for correct application requirement. They also select the airflow settings for Air Conditioning and Continuous Fan airflows.

The Setup Switch locations are shown and described on Fig. 56. The setup switches are also shown on the unit wiring label.

### Setup Switches (SW1)

The furnace control has 8 setup switches that may be set to meet the application requirements. Refer to Fig. 56 and the Adjustments section for setup switch configurations. To set these setup switches for the appropriate requirement:

1. Remove blower door.
2. Locate setup switches on furnace control.
3. Configure the set-up switches as necessary for the application.
4. Replace blower door.

**NOTE**: If a bypass humidifier is used, setup switch SW1-3 (Min/Int Heat Rise Adjust) should be in ON position. This compensates for the increased temperature in return air resulting from bypass.

**NOTE**: If modulating dampers are used, blower motor automatically compensates for modulating dampers.

### Air Conditioning (A/C) Setup Switches (SW2)

The air conditioning setup switches are used to match furnace airflow to required cooling airflow or high stage cooling airflow when a two-stage outdoor unit is used. Refer to Fig. 56 and the Adjustments section for setup switch configurations.

To set the desired cooling airflow:

1. Remove blower door.
2. Locate A/C setup switches on furnace control.
3. Determine air conditioning tonnage used.
4. Configure the switches for the required cooling airflow.

**NOTE**: Incorrect airflow caused by improper A/C switch setup may cause condensate blow-off or a frozen indoor coil in the cooling mode.

5. Replace blower door.

### Continuous Fan (CF) Setup Switches (SW3)

The CF setup switches are used to select desired airflow when thermostat is in continuous fan mode or to select low-cooling airflow for two-speed cooling units. Refer to Fig. 56 and the Adjustments section for setup switch configurations. This setup feature allows continuous fan airflow or low-cooling airflow to be adjusted. To set desired continuous fan airflow or low-cooling airflow:

1. Remove blower door.
2. Locate CF setup switches on furnace control.
3. Determine desired continuous fan airflow or low-cooling airflow.
4. Configure the switches for the required continuous fan or low-cooling airflow.
5. Replace blower door.

### Additional Setup Switches (SW4)

The furnace control has 3 additional setup switches labeled SW4. Setup switch SW4-2 can be used to lock the furnace into intermediate heat. When setup switch SW4-2 is ON it will over ride setup switch SW1-2 if it is ON. SW4-3 is used to adjust airflow. Refer to Fig. 56 and the Adjustments section for setup switch configurations. To activate setup switch SW4-2 and SW4-3:

1. Remove blower door.
2. Locate setup switch SW4 on furnace control.
3. Configure the switches for the required heat stages and airflow if necessary.
4. Replace blower door.

## Prime Condensate Trap with Water

**⚠ WARNING**

**CARBON MONOXIDE POISONING HAZARD**

Failure to follow these warnings could result in personal injury or death.

Failure to use a properly configured trap or NOT water-priming trap before operating furnace may allow positive pressure vent gases to enter the structure through drain tube. Vent gases contain carbon monoxide which is tasteless and odorless.

## ⚠ CAUTION

**UNIT OPERATION HAZARD**

Failure to follow this caution may result in intermittent unit operation or performance satisfaction.

Condensate trap must be PRIMED or proper draining may not occur. The condensate trap has two internal chambers which can ONLY be primed by pouring water into the inducer drain side of condensate trap.

1. Remove upper and middle collector box drain plugs opposite of the condensate trap. See Fig. 59.
2. Connect field-supplied 5/8-in. (16 mm) ID tube with attached funnel to upper collector box drain connection. See Fig. 59.
3. Pour one quart (liter) of water into funnel/tube. Water should run through collector box, overfill condensate trap, and flow into open field drain.
4. Remove funnel; replace collector box drain plug.
5. Connect field-supplied 5/8-in. (16 mm) ID tube to middle collector box drain port.
6. Pour one quart (liter) of water into funnel/tube. Water should run through collector box, overfill condensate trap, and flow into open field drain.
7. Remove funnel and tube from collector box and replace collector box drain plug.

## Purge Gas Lines

If not previously done, purge the lines after all connections have been made and check for leaks.

## ⚠ WARNING

**FIRE OR EXPLOSION HAZARD**

Failure to follow this warning could result in personal injury, death, and/or property damage.

Never purge a gas line into a combustion chamber. Never test for gas leaks with an open flame. Use a commercially available soap solution made specifically for the detection of leaks to check all connections. A fire or explosion may result causing property damage, personal injury or loss of life.

## Adjustments

## ⚠ CAUTION

**FURNACE DAMAGE HAZARD**

Failure to follow this caution could result in reduced furnace life.
DO NOT push or force gas valve adjusting screw. This can result in damage to the adjustment screw resulting in incorrect manifold pressure, which can result in a no heat situation or shorten the life of the heat exchangers.

## ⚠ WARNING

**FIRE HAZARD**

Failure to follow this warning could result in personal injury, death and/or property damage.

DO NOT push or force gas valve adjusting screw. This can result in damage to the adjustment screw resulting in incorrect manifold pressure, which can result in a no heat situation or shorten the life of the heat exchangers.

## ⚠ CAUTION

**FURNACE DAMAGE HAZARD**

Failure to follow this caution may result in reduced furnace life.

DO NOT redrill orifices. Improper drilling (burrs, out-of-round holes, etc.) can cause excessive burner noise and misdirection of burner flames. This can result in flame impingement of heat exchangers, causing failures. See Fig. 53.

For proper operation and long term reliability, the Furnace input rate must be within +/-2 percent of input rate on furnace rating plate or as adjusted for altitude.

The gas input rate on rating plate is for installations at altitudes up to 2000 ft. (609.6M).

## NOTICE

The NATURAL GAS manifold pressure adjustments in Tables 21 and 22 compensate for BOTH altitude AND gas heating value. DO NOT apply an additional derate factor to the pressures show in Table 21 or 22. The values in this table are NOT referenced to sea level; they are AS-MEASURED AT ALTITUDE.

The heating content of natural gas at altitude may already provide for a reduction in capacity of the furnace. Be sure to obtain the expected in-season gas heating value of the gas from the gas supplier BEFORE making any adjustments for capacity or altitude. Refer to Table 21 or 22. No adjustments to the furnace may be necessary at altitude for certain gas heating values.

Refer to the instructions provided in the factory-specified LP/Propane conversion kit for instructions for setting gas manifold pressures for LP/Propane applications.

In the USA, the input rating for altitudes above 2000 ft. (609.6M) must be reduced by 2 percent for each 1000 ft. (304.8M) above sea level. Refer to Table 18.

In Canada, the input rating must be reduced by 5 percent for altitudes of 2000 ft. (609.6M) to 4500 ft. (1371.6M) above sea level. The natural gas manifold pressures in Tables 21 and 22 adjust for BOTH altitude and natural gas heating value.

**NOTE**: For Canadian altitudes of 2000 to 4500 ft. (610 to 1372 M), use USA altitudes of 2001 to 2000 ft. (611 to 914 M) in Table 21.

To adjust manifold pressure to obtain the proper input rate, first, determine if the furnace has the correct orifice installed. At higher altitudes or different gas heat contents, it may be necessary to change the factory orifice to a different orifice. Tables have been

provided in the furnace installation instructions to match the required orifice to the manifold pressure to the heat content and specific gravity of the gas.

**NOTICE**

**THERE ARE TWO MANIFOLD PRESSURE TABLES**

Use Table 21 for all models **EXCEPT** 987MA60060V21.

Use Table 22 for Model 987MA60060V21 **ONLY.**

To do this:

1. Obtain average yearly gas heat value (at installed altitude) from local gas supplier.
2. Obtain average yearly specific gravity from local gas supplier.
3. Find installation altitude range for your installation in the manifold pressure tables. See Table 21 for 20,000 Btuh Max-Heat/8,000 Btuh min-heat per burner or Table 22 for 20,200 Btuh Max-Heat/8,000 Btuh Min-Heat per burner.
4. Find closest natural gas heat value and specific gravity in Table 21 or Table 22 depending on furnace gas input rate.
5. Follow heat value and specific gravity lines to point of intersection to find orifice size and maximum and minimum manifold pressure settings for proper operation.
6. Check and verify burner orifice size in furnace. NEVER ASSUME ORIFICE SIZE. ALWAYS CHECK AND VERIFY.

**NOTICE**

If orifice hole appears damaged or it is suspected to have been redrilled, check orifice hole with a numbered drill bit of correct size. Never redrill an orifice. A burr-free and squarely aligned orifice hole is essential for proper flame characteristics.

7. Replace original orifice with correct size, if required by Table 21 or Table 22 depending on furnace gas input rate. Use only factory-supplied orifices. See EXAMPLE 1.

**EXAMPLE 1 - 80,000 BTUH INPUT:**

EXAMPLE: 0 - 2000 ft. (0 - 609.6M) altitude

Heating value = 1050 Btu/cu ft.

Specific gravity = 0.62

Therefore: Orifice No. 44

* Furnace is shipped with No. 44 orifices. In this example, all main burner orifices are the correct size and do not need to be changed to obtain proper input rate.

Manifold pressure: 3.4-in. w.c. for maximum heat, 0.55-in. w.c. for minimum heat.

**NOTE**: To convert gas manifold Table pressures to Pascals, multiply the in. w.c. value by 249.1 Pa/in. w.c. (1 in. w.c. = 249.1 Pa).

## Check Inlet Gas Pressure

The inlet gas pressure must be checked with the furnace operating in maximum heat. This is necessary to make sure the inlet gas pressure does not fall below the minimum pressure of 4.5 in. w.c. for natural gas. The maximum inlet gas pressure is 13.6 in. of water column. If the inlet pressure is too low, you will not be able to adjust the manifold pressure to obtain the proper input rate. To check the inlet gas pressure:

1. Make sure the gas supply is turned off to the furnace and at the electric switch on the gas valve.
2. Remove the 1/8 in. NPT plug from the inlet pressure tap on the gas valve.
3. Connect a manometer to the inlet pressure tap on gas valve.
4. Turn on furnace power supply.
5. Turn gas supply manual shutoff valve to ON position.
6. Turn furnace gas valve switch to ON position.
7. Jumper the R to W/W1 and W2 thermostat connections at the furnace control board.
8. When main burners ignite, confirm inlet gas pressure is Between 4.5 in. w.c. and 13.6 in. w.c.
9. Remove jumper across thermostat connections to terminate call for heat. Wait until the blower off delay is completed.
10. Turn furnace gas valve electric switch to OFF position.
11. Turn gas supply manual shutoff valve to OFF position.
12. Turn off furnace power supply.
13. Remove manometer from the inlet pressure tap of the gas valve.

**⚠ WARNING**

**FIRE HAZARD**

Failure to follow this warning could result in personal injury, death, and/or property damage.

Reinstall manifold pressure tap plug in gas valve to prevent gas leak.

14. Apply pipe dope sparingly to end of inlet gas pipe plug and re-install in the gas valve.

## Adjust Manifold Pressure - Maximum Heat

For proper operation and long term reliability, the manifold pressure must be adjusted within +/-2 percent of input rate on furnace rating plate.

The modulating furnace manifold pressure is set at two points. The first point is Maximum Heat. The second point is Minimum Heat. Do not adjust Intermediate Heat manifold pressure. Intermediate Heat manifold pressure is checked as part of the temperature rise, but is not adjustable. Always adjust Maximum Heat first, then Minimum Heat.

**NOTICE**

DO NOT set Maximum Heat manifold pressure less than 3.2-in. w.c. or more than 3.8 in. w.c. for natural gas. If required manifold pressure is outside this range, change main burner orifices to obtain manifold pressure in this range.

To adjust manifold pressure to obtain input rate for Maximum Heat:

1. Make sure the gas supply is turned off to the furnace and at the electric switch on the gas valve.
2. Remove the 1/8 inch NPT plug from the outlet pressure tap on the gas valve.
3. Connect a manometer to the outlet pressure tap on gas valve.
4. Turn on furnace power supply.
5. Turn gas supply manual shutoff valve to ON position.
6. Turn furnace gas valve switch to ON position.
7. Jumper the R to W/W1 and W2 thermostat connections at the furnace control board.

8. After the main burners ignite and the blower starts, confirm Maximum Heat manifold pressure is correct, based on the manifold pressure tables in the installation instructions.
9. To adjust the Maximum Heat manifold pressure, slowly turn adjusting screw counterclockwise to decrease manifold pressure or clockwise to increase manifold pressure. Turn adjustment no more than one click per second until you obtain the required manifold pressure. See Fig. 52.
10. Main burner flame should be clear blue, almost transparent.
11. After adjusting the Maximum Heat manifold pressure, remove jumpers across thermostat connections to terminate the call for heat.
12. Wait for blower off-delay to finish then reset 115-v power to furnace.

## Adjust Manifold Pressure - Minimum Heat

To adjust manifold pressure to obtain input rate for Minimum Heat:

1. Turn SW1-2 ON and SW4-2 must be OFF.
2. Jumper R and W/W1 thermostat connections on control to start furnace.
3. After the main burners ignite and the blower starts, confirm Minimum Heat manifold pressure is correct, based on the manifold pressure tables in the installation instructions.
4. To adjust the Minimum Heat manifold pressure, slowly turn adjusting screw counterclockwise to decrease manifold pressure or clockwise to increase manifold pressure. Turn adjustment no more than one click per second until you obtain the required manifold pressure. See Fig. 52.
5. After adjusting the manifold pressure, remove jumpers across thermostat connections to terminate the call for heat. Wait until the blower off delay is completed.
6. Move setup switch SW1-2 to the OFF position.
7. Turn gas supply manual shutoff valve to OFF position.
8. Turn off furnace power supply.

**⚠ WARNING**

**FIRE HAZARD**

Failure to follow this warning could result in personal injury, death, and/or property damage.

Reinstall manifold pressure tap plug in gas valve to prevent gas leak.

9. Remove manometer from the inlet pressure tap of the gas valve.
10. Apply pipe dope sparingly to end of inlet gas pipe plug and re-install in the gas valve.
11. Re-install cap over adjustment screw on the top of the gas valve.

## Clocking The Meter

Verify natural gas input rate by clocking meter.

**NOTE**: Contact your HVAC distributor or gas supplier for metric gas meter Tables, if required.

1. Turn off all other gas appliances and pilots served by the meter.
2. Move setup switches SW1-2 to ON position and SW4-2 to OFF. This keeps furnace locked in low--heat operation when only W/W1 is energized or high heat operation when R to W/W1 and W2 are jumpered.
3. Jumper R to W/W1 and W2. Run furnace for 3 minutes in maximum heat operation.
4. Measure time (in sec) for gas meter to complete one revolution and note reading. The 2 or 5 cubic feet dial provides a more accurate measurement of gas flow.
5. Refer to Table 20 for cubic ft. of gas per hr. Multiply gas rate cu ft./hr by heating value (Btuh/cu ft.) to obtain input rate.
6. If clocked rate does not match required input from Step 5, increase manifold pressure to increase input or decrease manifold pressure to decrease input. Repeat steps 3 through 5 until correct maximum heat input is achieved. See Fig. 61.
7. Remove jumpers across thermostat connections to terminate the call for heat. Wait until the blower off delay is completed then reset 115-v power to furnace.
8. Jumper R and W/W1 thermostat connections on control to start furnace.

**NOTE**: Setup switches SW1-2 must be ON and SW4-2 must be OFF. This keeps furnace locked in minimum heat operation when R to W/W1 is energized. Repeat items 3 through 6 for minimum heat operation until minimum heat input is achieved

9. Restore furnace to normal operating condition.
10. Remove jumpers across thermostat connections to terminate the call for heat. Wait until the blower off delay is completed.
11. Disconnect 115 VAC power to furnace.
12. Turn gas valve ON/OFF switch to OFF.
13. Remove water column manometer or similar device from manifold pressure tap (if still connected).

**⚠ WARNING**

**FIRE HAZARD**

Failure to follow this warning could result in personal injury, death, and/or property damage.

Reinstall manifold pressure tap plug in gas valve to prevent gas leak.

14. Replace manifold pressure tap plug to gas valve.
15. Turn gas valve ON/OFF switch to ON.
16. Move setup SW1-2 on furnace control to position required for attached thermostat (OFF for single-stage thermostats, ON for two-stage thermostats).
17. Check for gas leaks and verify furnace operation.

## Adjust Temperature Rise

**NOTE**: Blower door must be installed when taking temperature rise reading. Leaving blower door off will result in incorrect temperature measurements, due to possible changes in duct static pressure and airflow.

**⚠ CAUTION**

**FURNACE DAMAGE HAZARD**

Failure to follow this caution may result in:

- Overheating the heat exchangers or condensing flue gases in heat exchanger areas not designed for condensate.
- Shortened furnace life
- Component damage.

Temperature rise must be within limits specified on furnace rating plate. Recommended operation is at midpoint of rise range or slightly above.

When setup switch SW1-4 is ON, operation will be near the high end of the rise range for improved comfort.

Furnace must operate within ranges of temperature rise specified on the furnace rating plate. Determine air temperature rise as follows:

1. Place thermometers in return and supply ducts as near furnace as possible. Be sure thermometers do not see heat exchanger so that radiant heat does not affect readings. This practice is particularly important with straight-run ducts.
2. When thermometer readings stabilize, subtract return-air temperature from supply-air temperature to determine air temperature rise.

**NOTE**: Temperature rise can be determined for Minimum Heat, Intermediate Heat and Maximum Heat operation by locking the furnace in each mode of operation. The mode of operation is based on the position of Set-up switch SW1-2 and SW4-2 on the furnace control board.

The furnace is capable of automatically providing proper airflow to maintain the temperature rise within the range specified on furnace rating plate. If temperature rise is outside this range, proceed as follows:

a. Check gas input for minimum, intermediate and maximum heat operation.
b. Check derate for altitude if applicable.
c. Check all return and supply ducts for excessive restrictions causing static pressure greater than 0.5-in. w.c.
d. Ensure Min/Int Heat Rise Adjust switch SW1-3 on furnace control is in ON position when a bypass humidifier is used. See Fig. 56 for switch location.
e. Check Troubleshooting Guide for Variable-Speed Step Modulating Condensing Furnaces.
f. Verify correct model plug is installed.

**To lock the furnace in Minimum Heat:**

1. Turn SW1-2 ON at the furnace control. Setup switch SW4-2 must be OFF.
2. Connect a jumper across R and W/W1 at the thermostat terminals at the furnace control.
3. Allow the burners to ignite and the blower to turn on.
4. Allow the supply temperature to stabilize and verify the proper rise range.

**If the temperature rise is too high or too low in Minimum Heat:**

1. Remove jumpers from R and W/W1.
2. Wait until the blower off delay is completed.
3. Turn 115 VAC power off.
4. Check the position of setup switch SW1-3. When set to ON, airflow is raised 18% for Minimum Heat and for Intermediate Heat. Factory default position is OFF.
5. Turn 115 VAC power on.
6. Re-check Minimum Heat Temperature Rise

**To lock the furnace in Intermediate Heat:**

1. Turn SW1-2 OFF and SW4-2 ON at the furnace control.
2. Connect a jumper across R and W/W1 at the thermostat terminals at the furnace control.
3. Allow the burners to ignite and the blower to turn on.
4. Allow the supply temperature to stabilize and verify the proper rise range.

**If the temperature rise is too high or too low in Intermediate Heat:**

1. Remove jumpers from R and W/W1.
2. Wait until the blower off delay is completed.
3. Turn 115 VAC power off.
4. Check the position of setup switch SW1-3. When set to ON, airflow is raised 18% for Minimum Heat and for Intermediate Heat. Factory default position is OFF.
5. Turn 115 VAC power on.
6. Re-check Minimum Heat Temperature Rise.

**To lock the furnace in Maximum Heat:**

1. Connect a jumper across R and W/W1 and W2 at the thermostat terminals at the furnace control.
2. Allow the burners to ignite and the blower to turn on.
3. Allow the supply temperature to stabilize and verify the proper rise range.

**If the temperature rise is too high or too low in Maximum Heat:**

1. Remove jumpers from R and W/W1 and W2.
2. Wait until the blower off delay is completed.
3. Turn 115 VAC power off.
4. Check the position of setup switch SW1-4. When set to OFF and SW1-3 is set to OFF, airflow is raised 10% for Minimum Heat, 7.5% for Intermediate Heat and 17.5% for Maximum Heat. Factory default position is ON. If SW1-3 is ON and SW1-4 is OFF, airflow is raised 18% for Minimum and Intermediate heat and 10% for Maximum Heat.
5. Turn 115 VAC power on.
6. Re-check Maximum Heat Temperature Rise.

**After the temperature rise has been verified:**

1. Remove jumpers from thermostat terminals.
2. Allow the blower off delay to complete.
3. Turn set-up switches SW1-2 and SW4-2 to the OFF position unless two-stage thermostat operation is desired. See Fig. 56.
4. Proceed to "Adjust Blower Off Delay" or install blower door if complete.

**⚠ WARNING**

**FIRE HAZARD**

Failure to follow this warning could result in personal injury, death, and/or property damage.

Reinstall manifold pressure tap plug in gas valve to prevent gas leak.

**⚠ CAUTION**

**FURNACE OVERHEATING HAZARD**

Failure to follow this caution may result in reduced furnace life.

Recheck temperature rise. It must be within limits specified on the rating plate. Recommended operation is at the mid-point of rise range or slightly above.

## Adjust Blower Off Delay (Heat Mode)

a. Remove blower door if installed.
b. Turn Dip switch SW-7 or SW-8 ON or OFF for desired blower off delay. See Table 19 and Fig. 34, 56 and 65.)

## Adjust Cooling Airflow – High-Speed and Low-Speed Cooling

The ECM blower can be adjusted for a range of airflows for low-speed or high-speed cooling. See Table 9 – Air Delivery – CFM (With Filter ) and Fig. 56 – Furnace Setup Switches and

Descriptions. Depending on the model size, the cooling airflow can be adjusted from 1.5 to 6 tons based on 350 CFM ton.

**NOTE**: 6 ton airflow will truncate at 2200 CFM on applicable models.

## Air Conditioning Setup Switch SW2

The high-speed or single-speed cooling airflow is adjusted by turning Setup switches SW2-1, SW2-2 and SW2-3 either ON or OFF. Select the required airflow from Table 9. Table  is based upon 350 CFM per ton. For other CFM per ton Setup switch selections, see Fig. 34, Fig. 56 and Fig. 65.

## Continuous Fan (CF) Setup Switch SW3

The Continuous Fan airflow selection via Setup switches SW3 is also the airflow for low-speed cooling when the furnace is used with a 2-speed cooling or heat pump unit. Adjust the Continuous Fan CFM Setup switches SW3 to match the airflow required for low-speed cooling. Select the required airflow from Table 9 and Fig. 56.

**NOTE**: The airflow selected via SW3 (Low-Speed Cooling Airflow) cannot exceed the airflow selected via SW2 (High-Speed Cooling Airflow). For other CFM per ton Setup switch selections, see Fig. 34 and Fig. 56.

**NOTE**: The airflow settings for SW2 and SW3 selections are the same, EXCEPT for the default values. See Table 9.

For a complete explanation of cooling airflow, refer to the section titled “Sequence of Operation.”

## Adjust Continuous Fan Airflow (and Low-Speed Cooling Airflow)

**NOTE**: When the furnace is used with a 2-speed cooling or heat pump unit, the airflow selected for continuous fan via Setup switch SW3 will also be the airflow used for low-speed cooling, and vice versa. The continuous fan speed can be further adjusted at a conventional thermostat using the continuous fan speed select function. Changing the continuous fan speed at a conventional thermostat DOES NOT change the low-speed cooling airflow selected via SW3 at the control board.

**NOTE**: When the furnace is used with a 2-speed cooling or heat pump unit, adjust the Continuous Fan CFM Setup switches SW3 to match the airflow required for low-speed cooling.

Select the required continuous fan airflow using Setup switches SW3 as shown in Fig. 56 and Table 9.

## Adjust Thermostat Heat Anticipator.

1. Mechanical thermostat. Set thermostat heat anticipator to match the amp. draw of the electrical components in the R-W/W1 circuit. Accurate amp. draw readings can be obtained at the wires normally connected to thermostat subbase terminals, R and W. The thermostat anticipator should NOT be in the circuit while measuring current.
   a. Set SW1-2 switch on furnace control board to ON.
   b. Remove thermostat from subbase or from wall.
   c. Connect an amp. meter as shown in Fig. 54 across the R and W subbase terminals or R and W wires at wall.
   d. Record amp. draw across terminals when furnace is in minimum heat and after blower starts.
   e. Set heat anticipator on thermostat per thermostat instructions and install on subbase or wall.
   f. Turn SW1-2 switch OFF.
   g. Install blower door.
   h. Electronic thermostat: Set cycle rate for 3 cycles per hr.

## Check Safety Controls

The flame sensor, gas valve, and pressure switch were all checked in the Start-up procedure section as part of normal operation.

1. Check Main Limit Switch
   This control shuts off combustion system and energizes air-circulating blower motor, if furnace overheats. By using this method to check limit control, it can be established that limit is functioning properly and will operate if there is a restricted return-air supply or motor failure. If limit control does not function during this test, cause must be determined and corrected.
   a. Run furnace for at least 5 minutes.
   b. Gradually block off return air with a piece of cardboard or sheet metal until the limit trips.
   c. Unblock return air to permit normal circulation.
   d. Burners will re-light when furnace cools down.
2. Check Pressure Switch(es)
   This control proves operation of the draft inducer blower.
   a. Turn off 115-v power to furnace.
   b. Disconnect inducer motor lead wires from wire harness.
   c. Turn on 115-v power to furnace.
   d. Set thermostat to “call for heat” and wait 1 minute. When pressure switch is functioning properly, hot surface igniter should **NOT** glow and control diagnostic light flashes a status code 32. If hot surface igniter glows when inducer motor is disconnected, shut down furnace immediately.
   e. Determine reason pressure switch did not function properly and correct condition.
   f. Turn off 115-v power to furnace.
   g. Reconnect inducer motor wires, replace blower door, and turn on 115-v power.
   h. Blower will run for 90 seconds before beginning the call for heat again.
   i. Furnace should ignite normally.

## Checklist

1. Put away tools and instruments. Clean up debris.
2. Verify that switches SW1-1 and SW1-6 are **OFF** and other setup switches are set as desired. Verify that switches SW1-7 and SW1-8 for the blower **OFF DELAY** are set as desired per Table 19.
3. Verify that blower and control doors are properly installed.
4. Cycle test furnace with room thermostat.
5. Check operation of accessories per manufacturer’s instructions.
6. Review Owner’s Manual with owner.
7. Attach literature packet to furnace.

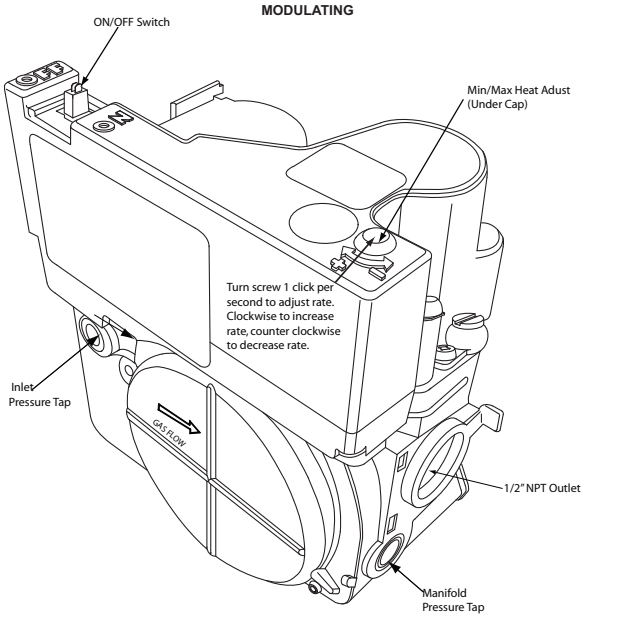


**Fig. 52 - Gas Valve**

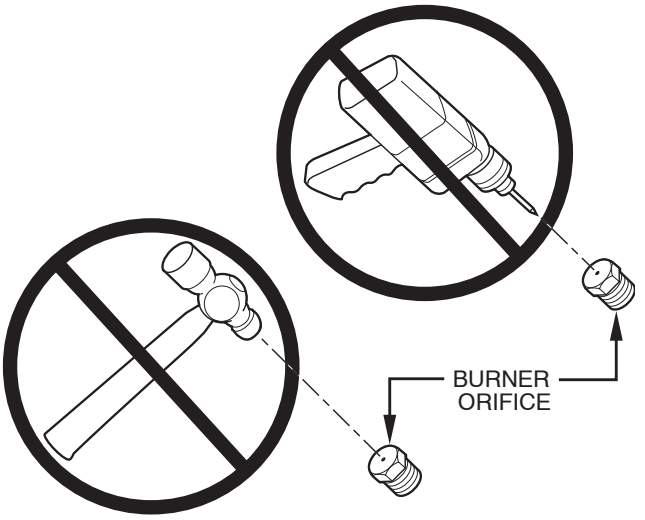


**Fig. 53 - Orifice Hole**

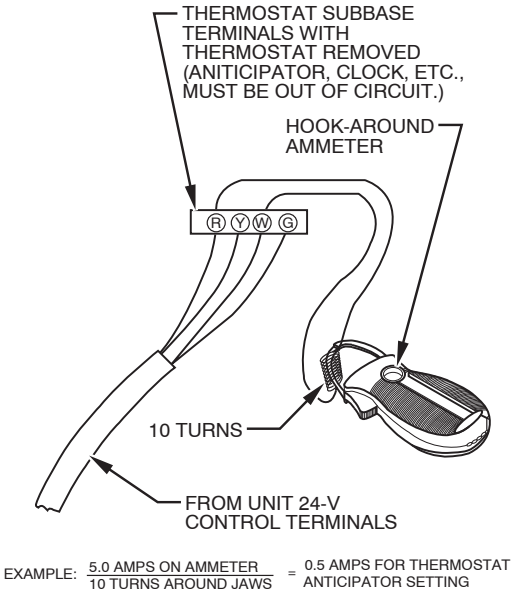


**Fig. 54 - Amp. Draw Check with Ammeter**

# SERVICE

If status code recall is needed, disconnect the "R" thermostat lead, reset power, and put setup switch "SW1-1" in the ON position. To clear the status code history put setup switch "SW1-1" in the ON position and jumper thermostat terminals "R", "W/W1", and "Y/Y2" simultaneously until status code #11 is flashed.

| LED CODE | STATUS |
|---|---|
| **CONTINUOUS OFF -** | Check for 115VAC at L1 & L2, & 24VAC at SEC-1 & SEC-2. |
| **CONTINUOUS ON -** | Control has 24VAC power. |
| **RAPID FLASHING -** | Line voltage (115VAC) polarity reversed. |

EACH OF THE FOLLOWING STATUS CODES IS A TWO DIGIT NUMBER WITH THE FIRST DIGIT DETERMINED BY THE NUMBER OF SHORT FLASHES AND THE SECOND DIGIT BY THE NUMBER OF LONG FLASHES.

11 **NO PREVIOUS CODE -** Stored status codes are erased automatically after 72 hours or as specified above.

12 **BLOWER ON AFTER POWER UP (115VAC or 24VAC) -** Blower runs for 90 seconds, if unit is powered up during a call for heat (R-W/W1 closed) or (R-W/W1) opens during blower on-delay period.

13 **LIMIT CIRCUIT LOCKOUT -** Lockout occurs if a limit or flame rollout switch is open longer than 3 minutes or 10 successive limit trips occurred during maximum heat. - Control will auto reset after 3 hours. - Refer to #33

14 **IGNITION LOCKOUT -** Control will auto-reset after 3 hours. Refer to #34.

15 **BLOWER MOTOR LOCKOUT -** Indicates the blower failed to reach 250 RPM or the blower failed to communicate within 30 seconds after being turned ON in two successive heating cycles. Control will auto reset after 3 hours. Refer to status code #41.

21 **GAS HEATING LOCKOUT -** Control will NOT auto reset. Check for: - Mis-wired gas valve - Defective control (valve relay)

22 **ABNORMAL FLAME-PROVING SIGNAL -** Flame is proved while gas valve is de-energized. Inducer will run until fault is cleared. Check for: - Leaky gas valve - Stuck-open gas valve

23 **PRESSURE SWITCH DID NOT OPEN -** Check for: -Obstructed pressure tubing - Pressure switch stuck closed

24 **SECONDARY VOLTAGE FUSE IS OPEN -** Check for: - Short circuit in secondary voltage (24VAC) wiring.

25 **MODEL SELECTION OR SETUP ERROR -** Either indicates the model plug (PL4) is missing or incorrect or setup switch "SW1-1" or "SW1-6" is positioned improperly. If code flashes only 4 times on power-up control is defaulting to model selection stored in memory. Check the following: - Thermostat call with "SW1-1" ON - Thermostat call with "SW1-6" ON - "SW1-1" and "SW1-6" both ON together - Two different furnace models twinned - See Rating Plate for model plug number and resistance values if code flashes continuously

31 **MEDIUM PRESSURE SWITCH, HIGH PRESSURE SWITCH OR PSR RELAY DID NOT CLOSE OR REOPENED -** Indicates the medium or high pressure switch failed to close on a call for intermediate or maximum heat, or opened during heat cycle. PSR relay may be defective. Refer to status code #32.

32 **LOW PRESSURE SWITCH DID NOT CLOSE OR REOPENED -** Indicates the low pressure switch input failed to close on a call for heat, or opened during minimum heat. If opens during 5 minutes after ignition the next heating cycle will be restricted to maximum heat. Check for: - Proper vent sizing - Plugged condensate drain - Low inlet gas pressure (if LGPS used) - Improper pressure switch wiring - Restricted vent - Disconnected or obstructed pressure tubing - Excessive wind - Water in vent piping, possible sagging pipe - Failed or "Out-of-Calibration" pressure switches

33 **LIMIT CIRCUIT FAULT -** Indicates a limit or flame rollout, or the furnace is operating in maximum heat due to 2 successive low or medium range limit trips. Blower will run for 4 minutes or until open switch remakes whichever is longer. If open longer than 3 minutes, code changes to lockout #13. If open less than 3 minutes status code #33 continues to flash until blower shuts off. Flame rollout switch requires manual reset. Check for: - Improper limit switch or no limit gasket - Defective switch or connections - Improper gas input adjustment - Loose blower wheel

34 **IGNITION PROVING FAULT -** Control will try three more times before lockout #14 occurs. If flame signal lost during blower on-delay period, blower will come on for the selected blower off-delay. Check for: - Oxide buildup on flame sensor (clean with fine steel wool) - Proper flame sense microamps (.5 microamps D.C. min., 4.0 - 6.0 nominal) - Manual valve shut-off - Control ground continuity - Gas valve defective turned "OFF" - Low inlet gas pressure - Inadequate flame carryover or rough ignition - Defective Hot Surface Ignitor - Flame sensor must not be grounded - Green/yellow wire **MUST** be connected to furnace sheet metal

35 **GAS VALVE FAULT -** Indicates the modulating gas valve failed to communicate. Check connection to furnace control and gas valve.

41 **BLOWER MOTOR FAULT -** Indicates the blower failed to reach 250 RPM or the blower failed to communicate within the prescribed time limits. Thirty seconds after being turned ON or ten seconds during steady-state operation.

42 **INDUCER MOTOR FAULT -** Indicates the inducer has not started within 20 seconds after a call for heat, the inducer motor RPM is outside its valid range of operation, or the inducer RPM signal was lost for 5 seconds during operation. Check for: -Proper vent sizing -Restricted combustion air supply -Failed inducer motor -Improper motor wiring

43 **LOW OR MEDIUM PRESSURE SWITCH OPEN WHILE MEDIUM OR HIGH PRESSURE SWITCH IS CLOSED** Check for: - Plugged condensate drain - HPS closes before LPS - HPS closes before MPS, - MPS closes before LPS - low inlet gas pressure (if LGPS used) - Improper pressure switch wiring - Water in vent piping, possibly sagging pipe - Stuck open low or medium pressure switch - Disconnected or obstructed pressure tubing

45 **CONTROL CIRCUITRY LOCKOUT -** Auto-reset after 1 hour lockout due to; - Gas valve relay stuck open - Flame sense circuit failure - Software check error Reset power to clear lockout. Replace control if status code repeats.

# COMPONENT TEST

To initiate the component test sequence shut OFF the room thermostat or disconnect the "R" thermostat lead. Reset power and then put setup switch "SW1-6" in the ON position to start the component test sequence. Once initiated the furnace control will turn the inducer ON. The inducer motor will run for the entire test. The hot surface igniter and blower motor will be turned ON for 15 seconds each. When the blower is turned OFF the inducer will be turned OFF. When the component test is completed one or more of the following codes will flash.

| CODE | DESCRIPTION |
|---|---|
| 11 | Indicates the inducer and blower motor tested OK. Visual check of hot surface igniter required. |
| 25 | SETUP ERROR - Same as code 25 above. |
| 35 | GAS VALVE FAULT - same as code 35 above |
| 41 | BLOWER MOTOR FAULT - Indicates blower motor failed test. Check blower, wiring, and furnace control. |
| 42 | INDUCER MOTOR FAULT - Indicates inducer motor failed test. Check inducer, wiring and furnace control. |

To repeat component test turn setup switch "SW1-6" OFF and then back ON. After component test is completed put setup switch "SW1-6" in the OFF position and reconnect the "R" thermostat lead.

338307-201 Rev. F

A11594

**Fig. 55 - Service Label Information**

987MA

**NOMINAL AIRFLOW BASED ON 350 CFM/TON (Factory Default - SW1-5 = OFF, SW4-3 = OFF)**

| Model Size | SW2 Clg Default | SW3 CF Default | COOLING (SW2) AND CONTINUOUS FAN (SW3) AIRFLOW: SET-UP SWITCH POSITIONS | | | | | | |
|---|---|---|---|---|---|---|---|---|---|
| | 3 2 1 N | 3 2 1 N | 3 2 1 N | 3 2 1 N | 3 2 1 N | 3 2 1 N | 3 2 1 N | 3 2 1 N | 3 2 1 N |
| 042060 | 1050 | 525 | 525 | 700 | 875 | 1050 | 1225 | 1225 | 1225 |
| 042080 | 1050 | 525 | 525 | 700 | 875 | 1050 | 1225 | 1225 | 1225 |
| 060060 | 1750 | 700 | 700 | 875 | 1050 | 1225 | 1400 | 1750 | 1750 |
| 060080 | 1750 | 700 | 700 | 875 | 1050 | 1225 | 1400 | 1750 | 1750 |
| 066100 | 1750 | 700 | 700 | 875 | 1050 | 1225 | 1400 | 1750 | 2100 |
| 066120 | 1750 | 875 | 700 | 875 | 1050 | 1225 | 1400 | 1750 | 2100 |

**NOMINAL AIRFLOW BASED ON 400 CFM/TON (SW1-5 = ON, SW4-3 = OFF)**

| Model Size | SW2 Clg Default | SW3 CF Default | COOLING (SW2) AND CONTINUOUS FAN (SW3) AIRFLOW: SET-UP SWITCH POSITIONS | | | | | | |
|---|---|---|---|---|---|---|---|---|---|
| | 3 2 1 N | 3 2 1 N | 3 2 1 N | 3 2 1 N | 3 2 1 N | 3 2 1 N | 3 2 1 N | 3 2 1 N | 3 2 1 N |
| 042060 | 1200 | 600 | 600 | 800 | 1000 | 1200 | 1400 | 1400 | 1400 |
| 042080 | 1200 | 600 | 600 | 800 | 1000 | 1200 | 1400 | 1400 | 1400 |
| 060060 | 2000 | 800 | 800 | 1000 | 1200 | 1400 | 1600 | 2000 | 2000 |
| 060080 | 2000 | 800 | 800 | 1000 | 1200 | 1400 | 1600 | 2000 | 2000 |
| 066100 | 2000 | 800 | 800 | 1000 | 1200 | 1400 | 1600 | 2000 | 2100 |
| 066120 | 2000 | 1000 | 800 | 1000 | 1200 | 1400 | 1600 | 2000 | 2100 |

**NOMINAL AIRFLOW BASED ON 325 CFM/TON (SW1-5 = OFF, SW4-3 = ON)**

| Model Size | SW2 Clg Default | SW3 CF Default | COOLING (SW2) AND CONTINUOUS FAN (SW3) AIRFLOW: SET-UP SWITCH POSITIONS | | | | | | |
|---|---|---|---|---|---|---|---|---|---|
| | 3 2 1 N | 3 2 1 N | 3 2 1 N | 3 2 1 N | 3 2 1 N | 3 2 1 N | 3 2 1 N | 3 2 1 N | 3 2 1 N |
| 042060 | 976 | 488 | 488 | 651 | 814 | 976 | 1139 | 1139 | 1139 |
| 042080 | 976 | 488 | 488 | 651 | 814 | 976 | 1139 | 1139 | 1139 |
| 060060 | 1627 | 651 | 651 | 814 | 976 | 1139 | 1302 | 1627 | 1627 |
| 060080 | 1627 | 651 | 651 | 814 | 976 | 1139 | 1302 | 1627 | 1627 |
| 066100 | 1627 | 651 | 651 | 814 | 976 | 1139 | 1302 | 1627 | 1953 |
| 066120 | 1627 | 814 | 651 | 814 | 976 | 1139 | 1302 | 1627 | 1953 |

**NOMINAL AIRFLOW BASED ON 370 CFM/TON (SW1-5 = ON, SW4-3 = ON)**

| Model Size | SW2 Clg Default | SW3 CF Default | COOLING (SW2) AND CONTINUOUS FAN (SW3) AIRFLOW: SET-UP SWITCH POSITIONS | | | | | | |
|---|---|---|---|---|---|---|---|---|---|
| | 3 2 1 N | 3 2 1 N | 3 2 1 N | 3 2 1 N | 3 2 1 N | 3 2 1 N | 3 2 1 N | 3 2 1 N | 3 2 1 N |
| 042060 | 1116 | 558 | 558 | 744 | 930 | 1116 | 1302 | 1302 | 1302 |
| 042080 | 1116 | 558 | 558 | 744 | 930 | 1116 | 1302 | 1302 | 1302 |
| 060060 | 1860 | 744 | 744 | 930 | 1116 | 1302 | 1488 | 1860 | 1860 |
| 060080 | 1860 | 744 | 744 | 930 | 1116 | 1302 | 1488 | 1860 | 1860 |
| 066100 | 1860 | 744 | 744 | 930 | 1116 | 1302 | 1488 | 1860 | 2100 |
| 066120 | 1860 | 930 | 744 | 930 | 1116 | 1302 | 1488 | 1860 | 2100 |

A12180

**Fig. 56 - Furnace Setup Switches and Description**

| | Furnace Setup Switch Description | | | |
|---|---|---|---|---|
| | SETUP SWITCH | SWITCH NAME | NORMAL POSITION | DESCRIPTION OF USE |
| SW1 | SW1-1 | Status Code Recovery | OFF | Turn ON to retrieve up to 7 stored status codes for troubleshooting assistance when R thermostat lead is disconnected. |
| | SW1-2 | Minimum Heat Only (Adaptive Heat Mode when SW1-2 and SW4-2 are OFF) | OFF | When SW1-2 and SW4-2 are OFF allows Modulating operation with a single stage thermostat. Turn ON SW1-2 when using two-stage thermostat to allow Minimum Heat operation when R to W/W1 closed and a Maximum heat operation when R to W/W1 and R to W2 close. |
| | SW1-3 | Min/Int Heat Rise Adjustment | OFF | Turn ON to increase Minimum Heat and Intermediate Heat airflow by 18 percent. This compensates for increased return air temperature caused with bypass humidifier. This also increases the Intermediate Heat inducer speed 15 percent. |
| | SW1-4 | Comfort/Efficiency Adjustment | ON | Turn ON to decrease Minimum heat airflow by 10 percent, Intermediate Heat airflow 7.5 percent and Maximum Heat airflow 17.5 percent for maximum comfort. |
| | SW1-5 | CFM per ton adjust | OFF | Turn ON for 400 CFM per ton, Turn OFF for 350 CFM per ton. See also SW4. |
| | SW1-6 | Component Self Test | OFF | Turn ON to initiate Component Self Test for troubleshooting assistance when R thermostat lead is disconnected. Turn OFF when Self Test is completed. |
| | SW1-7 & SW1-8 | Blower OFF delay | ON or OFF | Blower Off Delay time – adjustable 90 seconds to 180 seconds. See table in Adjustments section or refer to unit wiring diagram. |
| SW4 | SW4-2 | Intermendiate Heat Only (Adaptive Heat Mode when both SW1-2 and SW4-2 are OFF) | OFF | When SW1-2 and SW4-2 are OFF allows Modulating operation with a single stage thermostat. Turn ON SW4-2 when using two-stage thermostat to allow Intermediate Heat operation when R to W/W1 closed and a Maximum heat operation when R to W/W1 and R to W2 close. |
| SW4 | SW4-3 | CFM per ton Adjust | OFF | Allows additional CFM per ton selections when used with SW 1-5<br><br>325 CFM per ton (nominal) when SW 4-3 ON and SW 1-5 OFF<br><br>350 CFM per ton (nominal) when SW 4-3 OFF and SW 1-5 OFF<br><br>370 CFM per ton (nominal) when SW4-3 ON and SW 1-5 ON<br><br>400 CFM per ton (nominal) when SW 1-5 ON and SW 4-3 OFF<br><br>See Air Delivery Tables for model specific CFM vs. static pressure |

| AIR CONDITIONING (A/C) SETUP SWITCHES | |
|---|---|
| SW2 AC | SW 2, AC (Cooling Airflow) SETUP SWITCHES<br><br>The AC setup switch selects desired cooling or high stage cooling (two stage units) airflow.<br><br>See Air Delivery Tables for specific switch settings |
| **CONTINUOUS FAN (CF) SETUP SWITCHES** | |
| SW3 CF | SW 3, CF (Continuous Fan) SETUP SWITCHES<br><br>The CF setup switch selects desired Continuous Fan Airflow<br><br>The CF switch position is the low cooling airflow selection for two stage cooling units.<br><br>The CFM values in the Air Delivery Tables for SW 3 settings are the same as SW 2 settings.<br><br>SW 3 cannot be set for airflow higher than SW 2<br><br>See Air Delivery Tables for specific switch settings |

A11575 AMV

**Fig. 56 - Furnace Setup Switches and Description (Continued)**

**Table 18 – Altitude Derate Multiplier for U.S.A.***

| ALTITUDE | | PERCENT OF DERATE | DERATE MULTIPLIER FACTOR* |
|---|---|---|---|
| FT. | M | | |
| **0–2000** | **0–610** | 0 | 1.00 |
| **2001–3000** | **610–914** | 4–6 | 0.95 |
| **3001–4000** | **914–1219** | 6–8 | 0.93 |
| **4001–5000** | **1219–1524** | 8–10 | 0.91 |
| **5001–6000** | **1524–1829** | 10–12 | 0.89 |
| **6001–7000** | **1829–2134** | 12–14 | 0.87 |
| **7001–8000** | **2134–2438** | 14–16 | 0.85 |
| **8001–9000** | **2438–2743** | 16–18 | 0.83 |
| **9001–10,000** | **2743–3048** | 18–20 | 0.81 |

*Derate multiplier factors are based on midpoint altitude for altitude range.

**Table 19 – Blower Off Delay Setup Switch**

| DESIRED HEATING MODE BLOWER OFF DELAY (SEC.) | SETUP SWITCH (SW1–7 AND –8) POSITION | |
|---|---|---|
| | SW1–7 | SW1–8 |
| **90** | OFF | OFF |
| **120** | ON | OFF |
| **150** | OFF | ON |
| **180** | ON | ON |

**Table 20 – Gas Rate (CU ft./hr)**

| SECONDS FOR 1 REVOLUTION | SIZE OF TEST DIAL | | | SECONDS FOR 1 REVOLUTION | SIZE OF TEST DIAL | | |
|---|---|---|---|---|---|---|---|
| | 1 Cu Ft. | 2 Cu Ft. | 5 Cu Ft. | | 1 Cu Ft. | 2 Cu Ft. | 5 Cu Ft. |
| **10** | 360 | 720 | 1800 | 50 | 72 | 144 | 360 |
| **11** | 327 | 655 | 1636 | 51 | 71 | 141 | 355 |
| **12** | 300 | 600 | 1500 | 52 | 69 | 138 | 346 |
| **13** | 277 | 555 | 1385 | 53 | 68 | 136 | 340 |
| **14** | 257 | 514 | 1286 | 54 | 67 | 133 | 333 |
| **15** | 240 | 480 | 1200 | 55 | 65 | 131 | 327 |
| **16** | 225 | 450 | 1125 | 56 | 64 | 129 | 321 |
| **17** | 212 | 424 | 1059 | 57 | 63 | 126 | 316 |
| **18** | 200 | 400 | 1000 | 58 | 62 | 124 | 310 |
| **19** | 189 | 379 | 947 | 59 | 61 | 122 | 305 |
| **20** | 180 | 360 | 900 | 60 | 60 | 120 | 300 |
| **21** | 171 | 343 | 857 | 62 | 58 | 116 | 290 |
| **22** | 164 | 327 | 818 | 64 | 56 | 112 | 281 |
| **23** | 157 | 313 | 783 | 66 | 54 | 109 | 273 |
| **24** | 150 | 300 | 750 | 68 | 53 | 106 | 265 |
| **25** | 144 | 288 | 720 | 70 | 51 | 103 | 257 |
| **26** | 138 | 277 | 692 | 72 | 50 | 100 | 250 |
| **27** | 133 | 267 | 667 | 74 | 48 | 97 | 243 |
| **28** | 129 | 257 | 643 | 76 | 47 | 95 | 237 |
| **29** | 124 | 248 | 621 | 78 | 46 | 92 | 231 |
| **30** | 120 | 240 | 600 | 80 | 45 | 90 | 225 |
| **31** | 116 | 232 | 581 | 82 | 44 | 88 | 220 |
| **32** | 113 | 225 | 563 | 84 | 43 | 86 | 214 |
| **33** | 109 | 218 | 545 | 86 | 42 | 84 | 209 |
| **34** | 106 | 212 | 529 | 88 | 41 | 82 | 205 |
| **35** | 103 | 206 | 514 | 90 | 40 | 80 | 200 |
| **36** | 100 | 200 | 500 | 92 | 39 | 78 | 196 |
| **37** | 97 | 195 | 486 | 94 | 38 | 76 | 192 |
| **38** | 95 | 189 | 474 | 96 | 38 | 75 | 188 |
| **39** | 92 | 185 | 462 | 98 | 37 | 74 | 184 |
| **40** | 90 | 180 | 450 | 100 | 36 | 72 | 180 |
| **41** | 88 | 176 | 439 | 102 | 35 | 71 | 178 |
| **42** | 86 | 172 | 429 | 104 | 35 | 69 | 173 |
| **43** | 84 | 167 | 419 | 106 | 34 | 68 | 170 |
| **44** | 82 | 164 | 409 | 108 | 33 | 67 | 167 |
| **45** | 80 | 160 | 400 | 110 | 33 | 65 | 164 |
| **46** | 78 | 157 | 391 | 112 | 32 | 64 | 161 |
| **47** | 76 | 153 | 383 | 116 | 31 | 62 | 155 |
| **48** | 75 | 150 | 375 | 120 | 30 | 60 | 150 |
| **49** | 73 | 147 | 367 | | | | |

**Table 21 – Orifice Size and Manifold Pressure (In. W.C.) for Gas Input Rate**
**To Be Used with Modulating Furnaces EXCEPT 987MA60060V21**
**MODULATING FURNACE**
**(TABULATED DATA BASED ON 20,000 BTUH MAX-HEAT / 8,000 BTUH MIN-HEAT PER BURNER, DERATED 2%/1000 FT (305M) ABOVE SEA LEVEL)**

| ALTITUDE RANGE ft (m) | | AVG. GAS HEAT VALUE AT ALTITUDE (Btu/cu ft) | SPECIFIC GRAVITY OF NATURAL GAS | | | | | | | |
|---|---|---|---|---|---|---|---|---|---|---|
| | | | 0.58 | | 0.60 | | 0.62 | | 0.64 | |
| | | | Orifice No. | Mnfld Press Max/Min | Orifice No. | Mnfld Press Max/Min | Orifice No. | Mnfld Press Max/Min | Orifice No. | Mnfld Press Max/Min |
| U.S.A. and Canada | 0 (0) to 2000 (610) | 900 | 43 | 3.8 /0.60 | 42 | 3.2 /0.50 | 42 | 3.3 /0.55 | 42 | 3.4 /0.55 |
| | | 925 | 43 | 3.6 /0.55 | 43 | 3.7 /0.60 | 43 | 3.8 /0.60 | 42 | 3.2 /0.50 |
| | | 950 | 43 | 3.4 /0.55 | 43 | 3.5 /0.55 | 43 | 3.6 /0.60 | 43 | 3.7 /0.60 |
| | | 975 | **44** | **3.7 /0.60** | **44** | **3.8 /0.60** | 43 | 3.4 /0.55 | 43 | 3.6 /0.55 |
| | | 1000 | **44** | **3.5 /0.55** | **44** | **3.6 /0.60** | **44** | **3.8 /0.60** | 43 | 3.4 /0.55 |
| | | 1025 | **44** | **3.3 /0.55** | **44** | **3.5 /0.55** | **44** | **3.6 /0.55** | **44** | **3.7 /0.60** |
| | | 1050 | **44** | **3.2 /0.50** | **44** | **3.3 /0.55** | **44** | **3.4 /0.55** | **44** | **3.5 /0.55** |
| | | 1075 | 45 | 3.7 /0.60 | 45 | 3.8 /0.60 | **44** | **3.3 /0.50** | **44** | **3.4 /0.55** |
| | | 1100 | 46 | 3.7 /0.60 | 46 | 3.8 /0.60 | 45 | 3.8 /0.60 | **44** | **3.2 /0.50** |
| U.S.A. and Canada | U.S.A. 2001 (611) to 3000 (914) Canada 2001 (611) to 4500 (1372) | 800 | 42 | 3.4 /0.55 | 42 | 3.5 /0.55 | 42 | 3.6 /0.55 | 42 | 3.7 /0.60 |
| | | 825 | 43 | 3.8 /0.60 | 42 | 3.3 /0.50 | 42 | 3.4 /0.55 | 42 | 3.5 /0.55 |
| | | 850 | 43 | 3.6 /0.60 | 43 | 3.7 /0.60 | 42 | 3.2 /0.50 | 42 | 3.3 /0.55 |
| | | 875 | 43 | 3.4 /0.55 | 43 | 3.5 /0.55 | 43 | 3.7 /0.60 | 43 | 3.8 /0.60 |
| | | 900 | **44** | **3.7 /0.60** | **44** | **3.8 /0.60** | 43 | 3.5 /0.55 | 43 | 3.6 /0.55 |
| | | 925 | **44** | **3.5 /0.55** | **44** | **3.6 /0.60** | **44** | **3.8 /0.60** | 43 | 3.4 /0.55 |
| | | 950 | **44** | **3.3 /0.55** | **44** | **3.4 /0.55** | **44** | **3.6 /0.55** | **44** | **3.7 /0.60** |
| | | 975 | **44** | **3.2 /0.50** | **44** | **3.3 /0.50** | **44** | **3.4 /0.55** | **44** | **3.5 /0.55** |
| | | 1000 | 46 | 3.8 /0.60 | 45 | 3.8 /0.60 | **44** | **3.2 /0.50** | **44** | **3.3 /0.55** |
| U.S.A. Only | 3001 (915) to 4000 (1219) | 775 | 42 | 3.3 /0.55 | 42 | 3.4 /0.55 | 42 | 3.5 /0.55 | 42 | 3.6 /0.60 |
| | | 800 | 43 | 3.8 /0.60 | 42 | 3.2 /0.50 | 42 | 3.3 /0.55 | 42 | 3.4 /0.55 |
| | | 825 | 43 | 3.6 /0.55 | 43 | 3.7 /0.60 | 43 | 3.8 /0.60 | 42 | 3.2 /0.50 |
| | | 850 | **44** | **3.8 /0.60** | 43 | 3.5 /0.55 | 43 | 3.6 /0.55 | 43 | 3.7 /0.60 |
| | | 875 | **44** | **3.6 /0.60** | **44** | **3.7 /0.60** | 43 | 3.4 /0.55 | 43 | 3.5 /0.55 |
| | | 900 | **44** | **3.4 /0.55** | **44** | **3.5 /0.55** | **44** | **3.7 /0.60** | **44** | **3.8 /0.60** |
| | | 925 | **44** | **3.2 /0.50** | **44** | **3.4 /0.55** | **44** | **3.5 /0.55** | **44** | **3.6 /0.55** |
| | | 950 | 45 | 3.7 /0.60 | **44** | **3.2 /0.50** | **44** | **3.3 /0.55** | **44** | **3.4 /0.55** |
| U.S.A. Only | 4001 (1220) to 5000 (1524) | 750 | 42 | 3.3 /0.50 | 42 | 3.4 /0.55 | 42 | 3.5 /0.55 | 42 | 3.6 /0.55 |
| | | 775 | 43 | 3.7 /0.60 | 43 | 3.8 /0.60 | 42 | 3.3 /0.50 | 42 | 3.4 /0.55 |
| | | 800 | 43 | 3.5 /0.55 | 43 | 3.6 /0.60 | 43 | 3.7 /0.60 | 43 | 3.8 /0.60 |
| | | 825 | **44** | **3.8 /0.60** | 43 | 3.4 /0.55 | 43 | 3.5 /0.55 | 43 | 3.6 /0.60 |
| | | 850 | **44** | **3.5 /0.55** | **44** | **3.7 /0.60** | **44** | **3.8 /0.60** | 43 | 3.4 /0.55 |
| | | 875 | **44** | **3.3 /0.55** | **44** | **3.5 /0.55** | **44** | **3.6 /0.55** | **44** | **3.7 /0.60** |
| | | 900 | **44** | **3.2 /0.50** | **44** | **3.3 /0.50** | **44** | **3.4 /0.55** | **44** | **3.5 /0.55** |
| | | 925 | 46 | 3.8 /0.60 | 45 | 3.7 /0.60 | **44** | **3.2 /0.50** | **44** | **3.3 /0.55** |
| U.S.A. Only | 5001 (1525) to 6000 (1829) | 725 | 42 | 3.2 /0.50 | 42 | 3.3 /0.55 | 42 | 3.4 /0.55 | 42 | 3.5 /0.55 |
| | | 750 | 43 | 3.7 /0.60 | 43 | 3.8 /0.60 | 42 | 3.2 /0.50 | 42 | 3.3 /0.55 |
| | | 775 | 43 | 3.4 /0.55 | 43 | 3.5 /0.55 | 43 | 3.7 /0.60 | 43 | 3.8 /0.60 |
| | | 800 | **44** | **3.7 /0.60** | **44** | **3.8 /0.60** | 43 | 3.4 /0.55 | 43 | 3.5 /0.55 |
| | | 825 | **44** | **3.5 /0.55** | **44** | **3.6 /0.55** | **44** | **3.7 /0.60** | **44** | **3.8 /0.60** |
| | | 850 | **44** | **3.3 /0.50** | **44** | **3.4 /0.55** | **44** | **3.5 /0.55** | **44** | **3.6 /0.60** |
| | | 875 | 45 | 3.7 /0.60 | **44** | **3.2 /0.50** | **44** | **3.3 /0.55** | **44** | **3.4 /0.55** |
| | | 900 | 46 | 3.7 /0.60 | 46 | 3.8 /0.60 | 45 | 3.8 /0.60 | **44** | **3.2 /0.50** |
| U.S.A. Only | 6001 (1830) to 7000 (2133) | 675 | 42 | 3.4 /0.55 | 42 | 3.5 /0.55 | 42 | 3.6 /0.60 | 42 | 3.8 /0.60 |
| | | 700 | 42 | 3.2 /0.50 | 42 | 3.3 /0.50 | 42 | 3.4 /0.55 | 42 | 3.5 /0.55 |
| | | 725 | 43 | 3.6 /0.60 | 43 | 3.7 /0.60 | 43 | 3.8 /0.60 | 42 | 3.3 /0.50 |
| | | 750 | 43 | 3.4 /0.55 | 43 | 3.5 /0.55 | 43 | 3.6 /0.55 | 43 | 3.7 /0.60 |
| | | 775 | **44** | **3.6 /0.60** | **44** | **3.7 /0.60** | 43 | 3.4 /0.55 | 43 | 3.5 /0.55 |
| | | 800 | **44** | **3.4 /0.55** | **44** | **3.5 /0.55** | **44** | **3.6 /0.60** | **44** | **3.7 /0.60** |
| | | 825 | **44** | **3.2 /0.50** | **44** | **3.3 /0.55** | **44** | **3.4 /0.55** | **44** | **3.5 /0.55** |
| | | 850 | 46 | 3.8 /0.60 | 45 | 3.8 /0.60 | **44** | **3.2 /0.50** | **44** | **3.3 /0.55** |

A11251A

987MA

**Table 21- Orifice Size and Manifold Pressure (In. W.C.) for Gas Input Rate (Continued)**
**To Be Used with Modulating Furnaces EXCEPT 987MA60060V21**

**MODULATING FURNACE**
**(TABULATED DATA BASED ON 20,000 BTUH MAX-HEAT / 8,000 BTUH MIN-HEAT PER BURNER, DERATED 2%/1000 FT (305M) ABOVE SEA LEVEL)**

| ALTITUDE RANGE ft (m) | | AVG. GAS HEAT VALUE AT ALTITUDE (Btu/cu ft) | SPECIFIC GRAVITY OF NATURAL GAS | | | | | | | |
|---|---|---|---|---|---|---|---|---|---|---|
| | | | 0.58 | | 0.60 | | 0.62 | | 0.64 | |
| | | | Orifice No. | Mnfld Press Max/Min | Orifice No. | Mnfld Press Max/Min | Orifice No. | Mnfld Press Max/Min | Orifice No. | Mnfld Press Max/Min |
| U.S.A. Only | 7001 (2134) to 8000 (2438) | **650** | 42 | 3.4 /0.55 | 42 | 3.5 /0.55 | 42 | 3.6 /0.60 | 42 | 3.7 /0.60 |
| | | **675** | 43 | 3.8 /0.60 | 42 | 3.2 /0.50 | 42 | 3.3 /0.55 | 42 | 3.4 /0.55 |
| | | **700** | 43 | 3.5 /0.55 | 43 | 3.7 /0.60 | 43 | 3.8 /0.60 | 42 | 3.2 /0.50 |
| | | **725** | **44** | **3.8 /0.60** | 43 | 3.4 /0.55 | 43 | 3.5 /0.55 | 43 | 3.6 /0.60 |
| | | **750** | **44** | **3.5 /0.55** | **44** | **3.7 /0.60** | **44** | **3.8 /0.60** | 43 | 3.4 /0.55 |
| | | **775** | **44** | **3.3 /0.55** | **44** | **3.4 /0.55** | **44** | **3.5 /0.55** | **44** | **3.7 /0.60** |
| | | **800** | 45 | 3.8 /0.60 | **44** | **3.2 /0.50** | **44** | **3.3 /0.55** | **44** | **3.4 /0.55** |
| | | **825** | 46 | 3.7 /0.60 | 46 | 3.8 /0.60 | 45 | 3.8 /0.60 | **44** | **3.2 /0.50** |
| U.S.A. Only | 8001 (2439) to 9000 (2743) | **625** | 42 | 3.4 /0.55 | 42 | 3.5 /0.55 | 42 | 3.6 /0.55 | 42 | 3.7 /0.60 |
| | | **650** | 43 | 3.8 /0.60 | 42 | 3.2 /0.50 | 42 | 3.3 /0.55 | 42 | 3.4 /0.55 |
| | | **675** | 43 | 3.5 /0.55 | 43 | 3.6 /0.60 | 43 | 3.7 /0.60 | 42 | 3.2 /0.50 |
| | | **700** | **44** | **3.7 /0.60** | 43 | 3.4 /0.55 | 43 | 3.5 /0.55 | 43 | 3.6 /0.55 |
| | | **725** | **44** | **3.5 /0.55** | **44** | **3.6 /0.60** | **44** | **3.7 /0.60** | **44** | **3.8 /0.60** |
| | | **750** | **44** | **3.3 /0.50** | **44** | **3.4 /0.55** | **44** | **3.5 /0.55** | **44** | **3.6 /0.55** |
| | | **775** | 45 | 3.7 /0.60 | **44** | **3.2 /0.50** | **44** | **3.3 /0.50** | **44** | **3.4 /0.55** |
| U.S.A. Only | 9001 (2744) to 10000 (3048) | **600** | 42 | 3.3 /0.55 | 42 | 3.4 /0.55 | 42 | 3.6 /0.55 | 42 | 3.7 /0.60 |
| | | **625** | 43 | 3.7 /0.60 | 42 | 3.2 /0.50 | 42 | 3.3 /0.55 | 42 | 3.4 /0.55 |
| | | **650** | 43 | 3.5 /0.55 | 43 | 3.6 /0.55 | 43 | 3.7 /0.60 | 43 | 3.8 /0.60 |
| | | **675** | **44** | **3.7 /0.60** | **44** | **3.8 /0.60** | 43 | 3.4 /0.55 | 43 | 3.5 /0.55 |
| | | **700** | **44** | **3.4 /0.55** | **44** | **3.5 /0.55** | **44** | **3.7 /0.60** | **44** | **3.8 /0.60** |
| | | **725** | **44** | **3.2 /0.50** | **44** | **3.3 /0.55** | **44** | **3.4 /0.55** | **44** | **3.5 /0.55** |

* Orifice numbers shown in **BOLD** are factory-installed.

A11251B

987MA

**Table 22 – Orifice Size and Manifold Pressure (In. W.C.) for Gas Input Rate To Be Used with Modulating Furnaces 987MA60060V21 Only**

**(TABULATED DATA BASED ON 20,200 BTUH MAX-HEAT / 8,000 BTUH MIN-HEAT PER BURNER, DERATED 2%/1000 FT (305M) ABOVE SEA LEVEL)**

| ALTITUDE RANGE ft (m) | | AVG. GAS HEAT VALUE AT ALTITUDE (Btu/cu ft) | SPECIFIC GRAVITY OF NATURAL GAS | | | | | | | |
|---|---|---|---|---|---|---|---|---|---|---|
| | | | 0.58 | | 0.60 | | 0.62 | | 0.64 | |
| | | | Orifice No. | Mnfld Press Max/Min | Orifice No. | Mnfld Press Max/Min | Orifice No. | Mnfld Press Max/Min | Orifice No. | Mnfld Press Max/Min |
| U.S.A. and Canada | 0 (0) to 2000 (610) | 900 | 42 | 3.2 /0.50 | 42 | 3.3 /0.50 | 42 | 3.4 /0.55 | 42 | 3.5 /0.55 |
| | | 925 | 43 | 3.7 /0.55 | 43 | 3.8 /0.60 | 42 | 3.2 /0.50 | 42 | 3.3 /0.50 |
| | | 950 | 43 | 3.5 /0.55 | 43 | 3.6 /0.55 | 43 | 3.7 /0.60 | 43 | 3.8 /0.60 |
| | | 975 | **44** | **3.8 /0.60** | 43 | 3.4 /0.55 | 43 | 3.5 /0.55 | 43 | 3.6 /0.55 |
| | | 1000 | **44** | **3.6 /0.55** | **44** | **3.7 /0.60** | **44** | **3.8 /0.60** | 43 | 3.5 /0.55 |
| | | 1025 | **44** | **3.4 /0.55** | **44** | **3.5 /0.55** | **44** | **3.6 /0.55** | **44** | **3.8 /0.60** |
| | | 1050 | **44** | **3.3 /0.50** | **44** | **3.4 /0.55** | **44** | **3.5 /0.55** | **44** | **3.6 /0.55** |
| | | 1075 | 45 | 3.8 /0.60 | **44** | **3.2 /0.50** | **44** | **3.3 /0.50** | **44** | **3.4 /0.55** |
| | | 1100 | 46 | 3.8 /0.60 | 45 | 3.7 /0.60 | **44** | **3.2 /0.50** | **44** | **3.3 /0.50** |
| U.S.A. and Canada | U.S.A. 2001 (611) to 3000 (914) | 800 | 42 | 3.4 /0.55 | 42 | 3.5 /0.55 | 42 | 3.7 /0.55 | 42 | 3.8 /0.60 |
| | | 825 | 42 | 3.2 /0.50 | 42 | 3.3 /0.50 | 42 | 3.4 /0.55 | 42 | 3.6 /0.55 |
| | | 850 | 43 | 3.7 /0.60 | 43 | 3.8 /0.60 | 42 | 3.2 /0.50 | 42 | 3.3 /0.55 |
| | | 875 | 43 | 3.5 /0.55 | 43 | 3.6 /0.55 | 43 | 3.7 /0.60 | 43 | 3.8 /0.60 |
| | | 900 | **44** | **3.8 /0.60** | 43 | 3.4 /0.55 | 43 | 3.5 /0.55 | 43 | 3.6 /0.55 |
| | Canada 2001 (611) to 4500 (1372) | 925 | **44** | **3.6 /0.55** | **44** | **3.7 /0.60** | **44** | **3.8 /0.60** | 43 | 3.4 /0.55 |
| | | 950 | **44** | **3.4 /0.55** | **44** | **3.5 /0.55** | **44** | **3.6 /0.55** | **44** | **3.7 /0.60** |
| | | 975 | **44** | **3.2 /0.50** | **44** | **3.3 /0.50** | **44** | **3.4 /0.55** | **44** | **3.6 /0.55** |
| | | 1000 | 45 | 3.7 /0.60 | **44** | **3.2 /0.50** | **44** | **3.3 /0.50** | **44** | **3.4 /0.55** |
| U.S.A. Only | 3001 (915) to 4000 (1219) | 775 | 42 | 3.4 /0.55 | 42 | 3.5 /0.55 | 42 | 3.6 /0.55 | 42 | 3.7 /0.60 |
| | | 800 | 42 | 3.2 /0.50 | 42 | 3.3 /0.50 | 42 | 3.4 /0.55 | 42 | 3.5 /0.55 |
| | | 825 | 43 | 3.6 /0.55 | 43 | 3.7 /0.60 | 42 | 3.2 /0.50 | 42 | 3.3 /0.50 |
| | | 850 | 43 | 3.4 /0.55 | 43 | 3.5 /0.55 | 43 | 3.6 /0.55 | 43 | 3.8 /0.60 |
| | | 875 | **44** | **3.7 /0.60** | **44** | **3.8 /0.60** | 43 | 3.4 /0.55 | 43 | 3.6 /0.55 |
| | | 900 | **44** | **3.5 /0.55** | **44** | **3.6 /0.55** | **44** | **3.7 /0.60** | 43 | 3.4 /0.55 |
| | | 925 | **44** | **3.3 /0.50** | **44** | **3.4 /0.55** | **44** | **3.5 /0.55** | **44** | **3.6 /0.55** |
| | | 950 | 45 | 3.8 /0.60 | **44** | **3.2 /0.50** | **44** | **3.4 /0.55** | **44** | **3.5 /0.55** |
| U.S.A. Only | 4001 (1220) to 5000 (1524) | 750 | 42 | 3.3 /0.50 | 42 | 3.4 /0.55 | 42 | 3.6 /0.55 | 42 | 3.7 /0.55 |
| | | 775 | 43 | 3.8 /0.60 | 42 | 3.2 /0.50 | 42 | 3.3 /0.50 | 42 | 3.4 /0.55 |
| | | 800 | 43 | 3.6 /0.55 | 43 | 3.7 /0.60 | 43 | 3.8 /0.60 | 42 | 3.2 /0.50 |
| | | 825 | **44** | **3.8 /0.60** | 43 | 3.5 /0.55 | 43 | 3.6 /0.55 | 43 | 3.7 /0.60 |
| | | 850 | **44** | **3.6 /0.55** | **44** | **3.7 /0.60** | 43 | 3.4 /0.55 | 43 | 3.5 /0.55 |
| | | 875 | **44** | **3.4 /0.55** | **44** | **3.5 /0.55** | **44** | **3.6 /0.55** | **44** | **3.8 /0.60** |
| | | 900 | **44** | **3.2 /0.50** | **44** | **3.3 /0.50** | **44** | **3.4 /0.55** | **44** | **3.6 /0.55** |
| | | 925 | 45 | 3.7 /0.60 | **44** | **3.2 /0.50** | **44** | **3.3 /0.50** | **44** | **3.4 /0.55** |
| U.S.A. Only | 5001 (1525) to 6000 (1829) | 725 | 42 | 3.3 /0.50 | 42 | 3.4 /0.55 | 42 | 3.5 /0.55 | 42 | 3.6 /0.55 |
| | | 750 | 43 | 3.7 /0.60 | 42 | 3.2 /0.50 | 42 | 3.3 /0.50 | 42 | 3.4 /0.55 |
| | | 775 | 43 | 3.5 /0.55 | 43 | 3.6 /0.55 | 43 | 3.7 /0.60 | 42 | 3.2 /0.50 |
| | | 800 | **44** | **3.8 /0.60** | 43 | 3.4 /0.55 | 43 | 3.5 /0.55 | 43 | 3.6 /0.55 |
| | | 825 | **44** | **3.5 /0.55** | **44** | **3.7 /0.55** | **44** | **3.8 /0.60** | 43 | 3.4 /0.55 |
| | | 850 | **44** | **3.3 /0.50** | **44** | **3.4 /0.55** | **44** | **3.6 /0.55** | **44** | **3.7 /0.60** |
| | | 875 | 45 | 3.8 /0.60 | **44** | **3.3 /0.50** | **44** | **3.4 /0.55** | **44** | **3.5 /0.55** |
| | | 900 | 46 | 3.8 /0.60 | 45 | 3.7 /0.60 | **44** | **3.2 /0.50** | **44** | **3.3 /0.50** |
| U.S.A. Only | 6001 (1830) to 7000 (2133) | 675 | 42 | 3.5 /0.55 | 42 | 3.6 /0.55 | 42 | 3.7 /0.60 | 42 | 3.8 /0.60 |
| | | 700 | 42 | 3.2 /0.50 | 42 | 3.3 /0.50 | 42 | 3.5 /0.55 | 42 | 3.6 /0.55 |
| | | 725 | 43 | 3.7 /0.60 | 43 | 3.8 /0.60 | 42 | 3.2 /0.50 | 42 | 3.3 /0.50 |
| | | 750 | 43 | 3.4 /0.55 | 43 | 3.5 /0.55 | 43 | 3.7 /0.55 | 43 | 3.8 /0.60 |
| | | 775 | **44** | **3.7 /0.60** | **44** | **3.8 /0.60** | 43 | 3.4 /0.55 | 43 | 3.5 /0.55 |
| | | 800 | **44** | **3.5 /0.55** | **44** | **3.6 /0.55** | **44** | **3.7 /0.60** | **44** | **3.8 /0.60** |
| | | 825 | **44** | **3.2 /0.50** | **44** | **3.4 /0.55** | **44** | **3.5 /0.55** | **44** | **3.6 /0.55** |
| | | 850 | 45 | 3.7 /0.60 | **44** | **3.2 /0.50** | **44** | **3.3 /0.50** | **44** | **3.4 /0.55** |

A11621A

987MA

**Table 22 - Orifice Size and Manifold Pressure (In. W.C.) for Gas Input Rate (Continued)**
**To Be Used with Modulating Furnaces 987MA60060V21 Only**

**(TABULATED DATA BASED ON 20,200 BTUH MAX-HEAT / 8,000 BTUH MIN-HEAT PER BURNER, DERATED 2%/1000 FT (305M) ABOVE SEA LEVEL)**

| ALTITUDE RANGE ft (m) | | AVG. GAS HEAT VALUE AT ALTITUDE (Btu/cu ft) | SPECIFIC GRAVITY OF NATURAL GAS | | | | | | | |
|---|---|---|---|---|---|---|---|---|---|---|
| | | | 0.58 | | 0.60 | | 0.62 | | 0.64 | |
| | | | Orifice No. | Mnfld Press Max/Min | Orifice No. | Mnfld Press Max/Min | Orifice No. | Mnfld Press Max/Min | Orifice No. | Mnfld Press Max/Min |
| U.S.A. Only | | **650** | 42 | 3.4 /0.55 | 42 | 3.6 /0.55 | 42 | 3.7 /0.60 | 42 | 3.8 /0.60 |
| | **7001** | **675** | 42 | 3.2 /0.50 | 42 | 3.3 /0.50 | 42 | 3.4 /0.55 | 42 | 3.5 /0.55 |
| | **(2134)** | **700** | 43 | 3.6 /0.55 | 43 | 3.7 /0.60 | 42 | 3.2 /0.50 | 42 | 3.3 /0.50 |
| | **to** | **725** | 43 | 3.4 /0.55 | 43 | 3.5 /0.55 | 43 | 3.6 /0.55 | 43 | 3.7 /0.60 |
| | | **750** | **44** | **3.6 /0.55** | **44** | **3.7 /0.60** | 43 | 3.4 /0.55 | 43 | 3.5 /0.55 |
| | **8000** | **775** | **44** | **3.4 /0.55** | **44** | **3.5 /0.55** | **44** | **3.6 /0.55** | **44** | **3.7 /0.60** |
| | **(2438)** | **800** | **44** | **3.2 /0.50** | **44** | **3.3 /0.50** | **44** | **3.4 /0.55** | **44** | **3.5 /0.55** |
| | | **825** | 46 | 3.8 /0.60 | 45 | 3.7 /0.60 | **44** | **3.2 /0.50** | **44** | **3.3 /0.50** |
| U.S.A. Only | | **625** | 42 | 3.4 /0.55 | 42 | 3.5 /0.55 | 42 | 3.7 /0.55 | 42 | 3.8 /0.60 |
| | **8001** | **650** | 42 | 3.2 /0.50 | 42 | 3.3 /0.50 | 42 | 3.4 /0.55 | 42 | 3.5 /0.55 |
| | **(2439)** | **675** | 43 | 3.6 /0.55 | 43 | 3.7 /0.60 | 43 | 3.8 /0.60 | 42 | 3.2 /0.50 |
| | **to** | **700** | **44** | **3.8 /0.60** | 43 | 3.4 /0.55 | 43 | 3.6 /0.55 | 43 | 3.7 /0.55 |
| | | **725** | **44** | **3.6 /0.55** | **44** | **3.7 /0.60** | **44** | **3.8 /0.60** | 43 | 3.4 /0.55 |
| | **9000** | **750** | **44** | **3.3 /0.50** | **44** | **3.4 /0.55** | **44** | **3.5 /0.55** | **44** | **3.7 /0.55** |
| | **(2743)** | **775** | 45 | 3.8 /0.60 | **44** | **3.2 /0.50** | **44** | **3.3 /0.50** | **44** | **3.4 /0.55** |
| U.S.A. Only | **9001** | **600** | 42 | 3.4 /0.55 | 42 | 3.5 /0.55 | 42 | 3.6 /0.55 | 42 | 3.8 /0.60 |
| | **(2744)** | **625** | 43 | 3.8 /0.60 | 42 | 3.2 /0.50 | 42 | 3.3 /0.55 | 42 | 3.5 /0.55 |
| | **to** | **650** | 43 | 3.5 /0.55 | 43 | 3.6 /0.55 | 43 | 3.8 /0.60 | 42 | 3.2 /0.50 |
| | | **675** | **44** | **3.8 /0.60** | 43 | 3.4 /0.55 | 43 | 3.5 /0.55 | 43 | 3.6 /0.55 |
| | **10000** | **700** | **44** | **3.5 /0.55** | **44** | **3.6 /0.55** | **44** | **3.7 /0.60** | **44** | **3.8 /0.60** |
| | **(3048)** | **725** | **44** | **3.3 /0.50** | **44** | **3.4 /0.55** | **44** | **3.5 /0.55** | **44** | **3.6 /0.55** |

* Orifice numbers shown in **BOLD** are factory-installed.

A11621B

## SERVICE AND MAINTENANCE PROCEDURES

**⚠ WARNING**

**FIRE, INJURY OR DEATH HAZARD**

Failure to follow this warning could result in personal injury, death and/or property damage.

The ability to properly perform maintenance on this equipment requires certain knowledge, mechanical skills, tools, and equipment. If you do not possess these, do not attempt to perform any service and maintenance on this equipment other than those procedures recommended in the Owner's Manual.

**⚠ CAUTION**

**ENVIRONMENTAL HAZARD**

Failure to follow this caution may result in environmental pollution.

Remove and recycle all components or materials (i.e. oil, refrigerant, control board, etc.) before unit final disposal.

**⚠ WARNING**

**ELECTRICAL SHOCK, FIRE OR EXPLOSION HAZARD**

Failure to follow this warning could result in personal injury or death, or property damage.

Before installing, modifying, or servicing system, main electrical disconnect switch must be in the OFF position and install a lockout tag. There may be more than one disconnect switch. Lock out and tag switch with a suitable warning label. Verify proper operation after servicing.

**⚠ CAUTION**

**ELECTRICAL OPERATION HAZARD**

Failure to follow this caution may result in improper furnace operation or failure of furnace.

Label all wires prior to disconnection when servicing controls. Wiring errors can cause improper and dangerous operation.

### General

These instructions are written as if the furnace is installed in an upflow application. An upflow furnace application is where the blower is located below the combustion and controls section of the furnace, and conditioned air is discharged upward. Since this furnace can be installed in any of the 4 positions shown in Fig. 2, you must revise your orientation to component location accordingly.

### Electrical Controls and Wiring

**⚠ WARNING**

**ELECTRICAL SHOCK HAZARD**

Failure to follow this warning could result in personal injury or death.

There may be more than one electrical supply to the furnace. Check accessories and cooling unit for additional electrical supplies that must be shut off during furnace servicing. Lock out and tag switch with a suitable warning label.

The electrical ground and polarity for 115-v wiring must be properly maintained. Refer to Fig. 33 for field wiring information and to Fig. 65 for furnace wiring information.

**NOTE**: If the polarity is not correct, the STATUS LED on the control will flash rapidly and prevent the furnace from heating. The control system also requires an earth ground for proper operation of the control and flame-sensing electrode.

The 24-v circuit contains an automotive-type, 3-amp. fuse located on the control. See Fig. 34. Any shorts of the 24-v wiring during installation, service, or maintenance will cause this fuse to blow. If fuse replacement is required, use ONLY a 3-amp. fuse. The control LED will display status code 24 when fuse needs to be replaced.

### Troubleshooting

Refer to the service label. See Fig. 55.

The Troubleshooting Guide can be a useful tool in isolating furnace operation problems. Beginning with the word "Start," answer each question and follow the appropriate arrow to the next item. See Fig. 64.

The Guide will help to identify the problem or failed component. After replacing any component, verify correct operation sequence.

Proper instrumentation is required to service electrical controls. The control in this furnace is equipped with a Status Code LED (Light-Emitting Diode) to aid in installation, servicing, and troubleshooting. Status codes can be viewed at the indicator in blower door. The amber furnace control LED is either ON continuously, rapid flashing, or a code composed of 2 digits. The first digit is the number of short flashes, the second digit is the number of long flashes.

For an explanation of status codes, refer to service label located on control door or Fig. 55, and the troubleshooting guide which can be obtained from your distributor.

### Retrieving Stored Fault Codes

The stored status codes will NOT be erased from the control memory, when 115- or 24-v power is interrupted. The control will store up to the last 7 Status Codes in order of occurrence.

1. To retrieve status codes, proceed with the following:

**NOTE**: NO thermostat signal may be present at control, and all blower-OFF delays must be completed.

a. Leave 115-v power to furnace turned on.
b. Look into blower door indicator for current LED status.
c. Remove blower door.

**NOTE**: The Status Codes cannot be retrieved by disconnecting the limit switch. To retrieve Status Codes, follow the procedure below.

2. Turn Setup Switch, SW1-1 “ON.”
3. Manually close blower door switch.
4. Control will flash up to 7 Status Codes.
5. The last Status Code, or 8th Code, will be Code 11.
6. Turn SW1-1 “OFF.”
7. A continuously-lit Amber LED will appear and indicates proper operation.
8. Release blower door switch, install blower door and refer to the SERVICE label on the control door for more information.

### Component Self-Test

Component Test can ONLY be initiated by performing the following:

1. Remove blower door.
2. Remove the wire from the “R” terminal of the control board.
3. Turn Setup Switch, SW-1-6 “ON.”
4. Manually close blower door switch.

Blower door switch opens 115-v power to control. No component operation can occur unless switch is closed. Caution must be taken when manually closing this switch for service purposes.

**⚠ WARNING**

**ELECTRICAL SHOCK HAZARD**

Failure to follow this warning could result in personal injury, or death.

Blower door switch opens 115-v power to furnace control. No component operation can occur unless switch is closed. Exercise caution to avoid electrical shock from exposed electrical components when manually closing this switch for service purposes.

5. Component Test sequence will function as follows:

a. The furnace control CPU turns the inducer motor IDM ON at medium speed and keeps it ON through Step d.
b. The furnace control CPU will test communication with the modulating gas valve GV.
c. After waiting 15 seconds the furnace control CPU turns the hot surface igniter ON for 15 seconds, then OFF.
d. The furnace control CPU then turns the blower motor BLWM ON at mid-range airflow for 15 seconds, then OFF.
e. After shutting the blower motor BLWM OFF the furnace control CPU shuts the inducer motor IDM OFF.

**NOTE**: The EAC terminals are energized when the blower is operating.

After the component test is completed, 1 or more status codes (11, 25, 35, 41, or 42) will flash. See Service Label on control door or Service/Status Code Instructions for explanation of status codes.

**NOTE**: To repeat component test, turn setup switch SW1-6 to OFF and then back ON.

f. Turn setup switch SW1-6 OFF.

6. **RELEASE BLOWER DOOR SWITCH**, reattach wire to “R” terminal on furnace control board and replace blower door.

### Care and Maintenance

**⚠ WARNING**

**FIRE OR EXPLOSION HAZARD**

Failure to follow this warning could result in personal injury, death and/or property damage.

Never store flammable or combustible materials on, near, or in contact with the furnace, such as:

1. Spray or aerosol cans, rags, brooms, dust mops, vacuum cleaners, or other cleaning tools.
2. Soap powders, bleaches, waxes or other cleaning compounds, plastic or plastic containers, gasoline, kerosene, cigarette lighter fluid, dry cleaning fluids, or other volatile fluids.
3. Paint thinners and other painting compounds, paper bags, or other paper products. Exposure to these materials could lead to corrosion of the heat exchangers.

For continuing high performance and to minimize possible furnace failure, periodic maintenance must be performed on this furnace. Consult your local dealer about proper frequency of maintenance and the availability of a maintenance contract.

**⚠ WARNING**

**ELECTRICAL SHOCK AND FIRE HAZARD**

Failure to follow this warning could result in personal injury, death, and/or property damage.

Turn off the gas and electrical supplies to the furnace and install lockout tag before performing any maintenance or service. Follow the operating instructions on the label attached to the furnace.

**⚠ WARNING**

**CARBON MONOXIDE POISONING AND FIRE HAZARD**

Failure to follow this warning could result in personal injury, death and/or property damage.

Never operate furnace without a filter or filtration device installed. Never operate a furnace with filter or filtration device access doors removed.

**⚠ CAUTION**

**CUT HAZARD**

Failure to follow this caution may result in personal injury.

Sheet metal parts may have sharp edges or burrs. Use care and wear appropriate protective clothing, safety glasses and gloves when handling parts, and servicing furnaces.

The minimum maintenance on this furnace is as follows:

1. Check and clean air filter each month or more frequently if required. Replace if torn.
2. Check blower motor and wheel for cleanliness each heating and cooling season. Clean as necessary.

3. Check electrical connections for tightness and controls for proper operation each heating season. Service as necessary.
4. Inspect burner compartment before each heating season for rust, corrosion, soot or excessive dust. If necessary, have furnace and burner serviced by a qualified service agency.
5. Inspect the vent pipe/vent system before each heating season for water leakage, sagging pipes or broken fittings. Have vent pipes/vent system serviced by a qualified service agency.
6. Inspect any accessories attached to the furnace such as a humidifier or electronic air cleaner. Perform any service or maintenance to the accessories as recommended in the accessory instructions.

### Cleaning and/or Replacing Air Filter

The air filter type may vary depending on the application or orientation. The filter is external to the furnace casing. There are no provisions for an internal filter with this furnace. See "Filter Arrangement" under the "Installation" section of this manual.

**⚠ WARNING**

**CARBON MONOXIDE POISONING AND FIRE HAZARD**

Failure to follow this warning could result in personal injury, death and/or property damage.

Never operate furnace without a filter or filtration device installed. Never operate a furnace with filter or filtration device access doors removed.

**NOTE:** If the filter has an airflow direction arrow, the arrow must point toward the blower.

To clean or replace filters, proceed as follows:

**⚠ WARNING**

**ELECTRICAL SHOCK, FIRE OR EXPLOSION HAZARD**

Failure to follow this warning could result in personal injury or death, or property damage.

Before installing, modifying, or servicing system, main electrical disconnect switch must be in the OFF position and install a lockout tag. There may be more than one disconnect switch. Lock out and tag switch with a suitable warning label. Verify proper operation after servicing.

1. Turn off electrical supply to furnace.
2. Remove filter cabinet door.
3. Slide filter out of cabinet.
4. If equipped with permanent, washable filter, clean filter by spraying cold tap water through filter in opposite direction of airflow. Rinse filter and let dry. Oiling or coating of the filter is not recommended.
5. If equipped with factory specified disposable media filter, replace only with a factory specified media filter of the same size.
6. Slide filter into cabinet.
7. Replace filter cabinet door.
8. Turn on electrical supply to furnace.

### Blower Motor and Wheel Maintenance

To ensure long life, economy, and high efficiency, clean accumulated dirt and grease from blower wheel and motor annually.

The inducer and blower motors are pre-lubricated and require no additional lubrication. These motors can be identified by the absence of oil ports on each end of the motor.

The following items should be performed by a qualified service technician. Clean blower motor and wheel as follows:

1. Turn off electrical supply to furnace.
2. Remove blower door.
3. All factory wires can be left connected, but field thermostat and accessory wiring may need to be disconnected depending on their length and routing.
4. If the vent and combustion air pipe passes through the blower compartment, it will be necessary to remove the pipes from the blower compartment.

Disconnect the vent and combustion air pipe by:

a. Loosen the clamps on the vent couplings and combustion air pipe external to the furnace.
b. Separate the pipes from the couplings and move them aside.
c. Loosen the clamps on the vent couplings and combustion air pipe located on the blower shelf.
d. Separate the pipes from the blower compartment and set aside.
e. Remove the couplings from the pipe adapters and set aside.
f. After servicing the blower, reverse steps a through e.
g. Tighten all clamps 15 lb -in.

See Fig. 62 For Steps 5 through 14.

5. Remove screws securing blower assembly to blower shelf and slide blower assembly out of furnace. Detach ground wire and disconnect blower motor harness plugs from blower motor.

**NOTE:** Blower wheel is fragile. Use care.

6. Clean blower wheel and motor by using a vacuum with soft brush attachment. Be careful not to disturb balance weights (clips) on blower wheel vanes. Do not bend wheel or blades as balance will be affected.
7. If greasy residue is present on blower wheel, remove wheel from the blower housing and wash it with an appropriate degreaser. To remove wheel:
   a. Mark blower wheel location on shaft before disassembly to ensure proper reassembly.
   b. Loosen setscrew holding blower wheel on motor shaft.

**NOTE:** Mark blower mounting arms and blower housing so each arm is positioned at the same hole location during reassembly.

   c. Mark blower wheel orientation and cutoff plate location to ensure proper reassembly.
   d. Remove screws securing cutoff plate and remove cutoff plate from housing.
   e. Remove bolts holding motor mounts to blower housing and slide motor and mounts out of housing.
   f. Remove blower wheel from housing.
   g. Clean wheel per instructions on degreaser cleaner. Do not get degreaser in motor.
8. Reassemble motor and blower wheel by reversing items 7b through 7f. Ensure wheel is positioned for proper rotation.
9. Torque motor mounting bolts to 40 +/- 10 lb-in. when reassembling.
10. Torque blower wheel set screw to 160 +/- 20 lb-in. when reassembling.
11. Verify that blower wheel is centered in blower housing and set screw contacts the flat portion of the motor shaft. Loosen set screw on blower wheel and reposition if necessary.
12. Spin the blower wheel by hand to verify that the wheel does not rub on the housing.

13. Reinstall blower assembly in furnace.
14. Reinstall 2 screws securing blower assembly to blower deck.
15. Reconnect blower leads to furnace control. Refer to furnace wiring diagram, and connect thermostat leads if previously disconnected.

**NOTE:** Be sure to attach ground wire and reconnect blower harness plugs to blower motor.

**⚠ WARNING**

**ELECTRICAL OPERATION HAZARD**

Failure to follow this warning could result in personal injury or death.

Blower door switch opens 115-v power to control. No component operation can occur unless switch is closed. Caution must be taken when manually closing this switch for service purposes.



16. Downflow or horizontal furnaces with vent pipe through furnace only:
    a. Install and connect short piece of vent pipe inside furnace to existing vent.
    b. Connect vent connector to vent elbow.
17. Turn on electrical supply. If outdoor temperature is below 70°F, turn off circuit breaker to outdoor unit before running furnace in the cooling cycle. Turn outdoor circuit breaker on after completing cooling cycle. See Fig. 34. Manually close blower door switch. Use a piece of tape to hold switch closed. Check for proper rotation and speed changes between heating and cooling by jumpering R to G and R to Y/Y2 on furnace control thermostat terminals.

**NOTE**: If R-W/W1 thermostat terminals are jumpered at the time blower door switch is closed, blower will run for 90 sec before beginning a heating cycle.

    a. Perform component self-test as shown at the bottom of the SERVICE label, located on the control door.
    b. Verify blower is rotating in the correct direction
18. If furnace is operating properly, RELEASE BLOWER DOOR SWITCH. Remove any jumpers or reconnect any disconnected thermostat leads. Replace blower door.
19. Turn on gas supply and cycle furnace through one complete heating cycle. Verify the furnace temperature rise as shown in Adjustments Section. Adjust temperature rise as shown in Adjustments Section.

## Cleaning Burners and Flame Sensor

The following items must be performed by a qualified service technician. If the burners develop an accumulation of light dirt or dust, they may be cleaned by using the following procedure:

**NOTE**: Use a back-up wrench on the gas valve to prevent the valve from rotating on the manifold or damaging the mounting to the burner assembly.

**⚠ WARNING**

**ELECTRICAL SHOCK AND FIRE HAZARD**

Failure to follow this warning could result in personal injury, death, and/or property damage.

Turn off the gas and electrical supplies to the furnace and install lockout tag before performing any maintenance or service. Follow the operating instructions on the label attached to the furnace.

Refer to Fig. 63.

1. Disconnect power at external disconnect, fuse or circuit breaker.
2. Turn off gas at external shut-off or gas meter.
3. Remove control door and set aside.
4. Turn electric switch on gas valve to OFF.
5. Disconnect the gas pipe from gas valve and remove pipe from the furnace casing.
6. Disconnect the connector harness from gas valve (Modulating only) or remove individual wires from terminals on gas valve (All other models).
7. Disconnect Hot Surface Igniter (HSI) wires from HSI.
8. Disconnect Flame Sensor wire from Flame Sensor.
9. Support the manifold and remove the 4 screws that secure the manifold assembly to the burner assembly and set aside. Note the location of the green/yellow wire and ground terminal.
10. Inspect the orifices in the manifold assembly for blockages or obstructions. Remove orifice and clean or replace orifice.
11. Remove the four screws that attach the top plate of the casing to the furnace.
12. Raise top plate up slightly and prop it up with a small piece of wood or folded cardboard.
13. Support the burner assembly and remove the screws that attach the burner assembly to the heat exchanger cell panel.
14. Remove wires from both rollout switches.
15. Slide one-piece burner out of slots on sides of burner assembly.
16. Remove the flame sensor from the burner assembly.
17. (Optional) Remove the Hot Surface Igniter (HSI) and bracket from the burner assembly.
18. Check igniter resistance. Nominal resistance is 40 to 70 ohms at room temperature and is stable over the life of the igniter.
19. Clean burner with a brush and a vacuum.
20. Clean the flame sensor with fine steel wool (0000 grade). Do not use sand paper or emery cloth.

**To reinstall burner assembly:**

1. Install the Hot Surface Igniter (HSI) and bracket in burner assembly.
2. Install flame sensor on burner.
3. Align the edges of the one-piece burner with the slots in the burner assembly and slide the burners forward until they are fully seated in the burner assembly.
4. Align the orifices in the manifold assembly with the support rings on the end of the burner.
5. Insert the orifices in the support rings of the burners.

**NOTE**: If manifold does not fit flush against the burner, do not force the manifold on the burner assembly. The burners are not fully seated forward in the burner assembly. Remove the manifold and check burner positioning in the burner assembly assembly before re-installing the manifold.

6. Attach the green/yellow wire and ground terminal to one of the manifold mounting screws.
7. Install the remaining manifold mounting screws.
8. Check the igniter alignment. See Fig. 57, 58 and 63.
9. Attach the wires to the roll-out switches.
10. Align the burner assembly with the openings in the primary cell inlet panel and attach the burner assembly to the cell panel.
11. Connect the wire for the flame sensor.
12. Connect the wire for the Hot Surface Igniter.

**NOTE**: Use propane-resistant pipe dope to prevent leaks. Do not use Teflon tape.

13. Install the gas pipe to the gas valve.

**⚠ WARNING**

**FIRE OR EXPLOSION HAZARD**

Failure to follow this warning could result in personal injury, death, and/or property damage.

Never purge a gas line into a combustion chamber. Never test for gas leaks with an open flame. Use a commercially available soap solution made specifically for the detection of leaks to check all connections. A fire or explosion may result causing property damage, personal injury or loss of life.

14. Check for gas leaks with a commercially available soap solution made specifically for the detection of leaks.
15. Turn gas on at electric switch on gas valve and at external shut-off or meter
16. Turn power on at external disconnect, fuse or circuit breaker.
17. Run the furnace through two complete heating cycles to check for proper operation
18. Install control door when complete.

## Servicing Hot Surface Igniter

The igniter does **NOT** require annual inspection. Check igniter resistance before removal. Refer to Fig. 57, 58 and 63.

1. Turn off gas and electrical supplies to furnace.
2. Remove control door.
3. Disconnect igniter wire connection.
4. Check igniter resistance. Igniter resistance is affected by temperature. Only check resistance when the igniter is at room temperature.
   a. Using an ohm meter, check resistance across both igniter leads in connector.
   b. Cold reading should be between 40 ohms and 70 ohms. Resistance reading will increase as igniter temperature increases.
5. Remove igniter assembly.
   a. Using a 1/4-in. driver, remove the two screws securing the igniter mounting bracket to the burner assembly See Fig. 63.
   b. Carefully withdraw the igniter and bracket assembly through the front of the burner assembly without striking the igniter on surrounding parts.
   c. Inspect igniter for signs of damage or failure.
   d. If replacement is required, remove the screw that secures the igniter on igniter bracket and remove the igniter.
6. To replace igniter and bracket assembly, reverse items 5a through 5d.
7. Reconnect igniter harness to the igniter, dressing the igniter wires to ensure there is no tension on the igniter itself. See Fig. 63.
8. Turn on gas and electrical supplies to furnace.
9. Verify igniter operation by initiating control board self-test feature or by cycling thermostat.
10. Replace control door.

## Flushing Collector Box and Drainage System

**⚠ WARNING**

**ELECTRICAL SHOCK AND FIRE HAZARD**

Failure to follow this warning could result in personal injury, death, and/or property damage.

Turn off the gas and electrical supplies to the furnace and install lockout tag before performing any maintenance or service. Follow the operating instructions on the label attached to the furnace.

1. Turn off gas and electrical supplies to furnace.
2. Remove control door.
3. Disconnect pressure switch tube from pressure switch port.

**NOTE:** Ensure the pressure switch tube disconnected from the pressure switch is higher than the collector box opening or water will flow out of tube.

4. Remove the collector box plug from the top port on the upper corner of the collector box. See Fig. 59.
5. Attach a funnel with a flexible tube to port on the collector box.
6. Flush inside of collector box with water until discharge water from condensate trap is clean and runs freely.
7. Repeat steps 4 thru 6 with middle plug on upper corner of collector box.
8. Remove the pressure switch tube from the collector box.

**NOTE**: Do **NOT** blow into tube with tube connected to the pressure switch.

9. Clean pressure switch port on collect box with a small wire. Shake any water out of pressure switch tube.
10. Reconnect tube to pressure switch and pressure switch port.
11. Remove the relief tube from the port on the collector box and the trap.
12. Clean the relief port on collect box and the trap with a small wire. Shake any water out of the tube.
13. Reconnect relief tube to trap and collector box ports.

## Cleaning Condensate Drain and Trap

**NOTE**: If the condensate trap is removed, a new gasket between the trap and collector box is required. Verify a condensate trap gasket is included in the service kit or obtain one from your local distributor.

1. Disconnect power at external disconnect, fuse or circuit breaker.
2. Turn off gas at external shut-off or gas meter.
3. Remove control door and set aside.
4. Turn electric switch on gas valve to OFF.
5. Disconnect external drain from condensate drain elbow or drain extension pipe inside the furnace and set aside.
6. Disconnect the condensate trap relief hose from collector box port and condensate trap.

**NOTE**: If condensate has a heat pad attached to the trap, trace the wires for the pad back to the connection point and disconnect the wires for the heat pad.

7. Remove the screw that secures the condensate trap to the collector box, remove the trap and set aside.
8. Remove the trap gasket from the collector box if it did not come off when the trap was removed.
9. Discard the old trap gasket.
10. Rinse condensate trap in warm water until trap is clean.
11. Flush condensate drain lines with warm water. Remember to check and clean the relief port on the collector box.
12. Shake trap dry.
13. Clean port on collector box with a small wire.

**To re-install Condensate Drain and Trap:**

1. Remove adhesive backing from condensate trap gasket
2. Install gasket on collector box

3. Align the condensate trap with the drain opening on the collector box and secure the trap with the screw
4. Attach the relief hose to the relief port on the condensate trap and collector box.
5. Secure tubing to prevent any sags or traps in the tubing.
6. Connect condensate drain elbow or drain extension elbow to the condensate trap
7. Connect the leads of the condensate heat pad (if used)
8. Connect external drain piping to the condensate drain elbow or drain extension pipe.
9. Turn gas on at electric switch on gas valve and at external shut-off or meter
10. Turn power on at external disconnect, fuse or circuit breaker.
11. Run the furnace through two complete heating cycles to check for proper operation
12. Install control door when complete.

### Checking Heat Pad Operation (If Applicable)

In applications where the ambient temperature around the furnace is 32°F or lower, freeze protection measures are required. If this application is where heat tape has been applied, check to ensure it will operate when low temperatures are present.

**NOTE:** The Heat Pad, when used, should be wrapped around the condensate drain trap. There is no need to use heat tape within the furnace casing. Most heat tapes are temperature activated, and it is not practical to verify the actual heating of the tape. Check the following:

1. Check for signs of physical damage to heat tape such as nicks, cuts, abrasions, gnawing by animals, etc.
2. Check for discolored heat tape insulation. If any damage or discolored insulation is evident, replace heat tape.
3. Check that heat tape power supply circuit is on.

## Cleaning Heat Exchangers

The following items must be performed by a qualified service technician.

### Primary Heat Exchangers

If the heat exchangers get an accumulation of light dirt or dust on the inside, they may be cleaned by the following procedure:

**NOTE:** If the heat exchangers get a heavy accumulation of soot and carbon, both the primary and secondary heat exchangers should be replaced rather than trying to clean them thoroughly due to their intricate design. A build-up of soot and carbon indicates that a problem exists which needs to be corrected, such as improper adjustment of manifold pressure, insufficient or poor quality combustion air, improper vent termination, incorrect size or damaged manifold orifice(s), improper gas, or a restricted heat exchanger (primary or secondary). Action must be taken to correct the problem.

1. Turn off gas and electrical supplies to furnace.

**⚠ WARNING**

**ELECTRICAL SHOCK, FIRE OR EXPLOSION HAZARD**

Failure to follow this warning could result in personal injury or death, or property damage.

Before installing, modifying, or servicing system, main electrical disconnect switch must be in the OFF position and install a lockout tag. There may be more than one disconnect switch. Lock out and tag switch with a suitable warning label. Verify proper operation after servicing.

**⚠ WARNING**

**ELECTRICAL SHOCK AND FIRE HAZARD**

Failure to follow this warning could result in personal injury, death, and/or property damage.

Turn off the gas and electrical supplies to the furnace and install lockout tag before performing any maintenance or service. Follow the operating instructions on the label attached to the furnace.

2. Remove control door.
3. Disconnect wires or connectors to flame rollout switch, gas valve, igniter, and flame sensor.
4. Using backup wrench, disconnect gas supply pipe from furnace gas control valve.
5. Remove two screws attaching top filler plate and rotate upwards to gain access to screws attaching burner assembly to cell panel.
6. Remove screws attaching burner assembly to cell panel. See Fig. 63.

**NOTE:** Burner cover, manifold, gas valve, and burner assembly should be removed as one assembly.

7. Clean heat exchanger openings with a vacuum and a soft brush. See Fig. 60.

**NOTE**: After cleaning, inspect the heat exchangers to ensure they are free of all foreign objects that may restrict flow of combustion products.

8. Reverse items 6 through 1 for reassembly.
9. Refer to furnace wiring diagram and reconnect wires to flame rollout switch, gas valve, igniter, and flame sensor.
10. Turn on gas and electrical supplies to furnace.
11. Check furnace operation through 2 complete heat operating cycles. Look at burners. Burner flames should be clear blue, almost transparent. See Fig. 61.
12. Check for gas leaks.

## ⚠ WARNING

**FIRE OR EXPLOSION HAZARD**

Failure to follow this warning could result in personal injury, death, and/or property damage.

Never purge a gas line into a combustion chamber. Never test for gas leaks with an open flame. Use a commercially available soap solution made specifically for the detection of leaks to check all connections. A fire or explosion may result causing property damage, personal injury or loss of life.

13. Replace main furnace door.

### Secondary Heat Exchangers

The condensing side (inside) of the secondary heat exchanger CANNOT be serviced or inspected without complete removal of the heat exchanger assembly. Detailed information on heat exchanger removal can be obtained from your Distributor.

### Wiring Diagrams

See Fig. 65 for the Deluxe 4-Way Multipoise Furnace wiring diagrams.

## WINTERIZATION

## ⚠ CAUTION

**UNIT AND PROPERTY DAMAGE HAZARD**

Failure to follow this caution may result in unit component or property damage.

If the furnace is installed in an unconditioned space where the ambient temperatures may be 32° F (0° C) or lower, freeze protection measures must be taken to prevent property or product damage.

Since the furnace uses a condensing heat exchanger, some water will accumulate in the unit as a result of the heat transfer process. Therefore, once it has been operated, it cannot be turned off and left off for an extended period of time when temperatures will reach 32°F (0°C) or lower unless winterized. Follow these procedures to winterize your furnace:

## ⚠ CAUTION

**UNIT COMPONENT DAMAGE HAZARD**

Failure to follow this caution may result in damage to the furnace and other property damage.

Do not use ethylene glycol (automotive antifreeze coolant or equivalent). Failure of plastic components may occur.

1. Obtain propylene glycol (RV/swimming pool antifreeze or equivalent).
2. Turn off gas and electrical supplies to your furnace.
3. Remove furnace control door.
4. Remove the top unused rubber plug from the port on the collector box opposite the condensate trap. See Fig. 59.
5. Connect a field supplied 3/8-in. (9.5-mm) ID tube to the open port on the collector box
6. Insert a field supplied funnel into the tube.
7. Pour 1 quart of anti-freeze solution into the funnel/tube. Antifreeze should run through the inducer housing, overfill condensate trap and flow to an open drain.
8. Replace the rubber plug in the port on the collector box.
9. Remove the middle unused rubber plug from the port on the collector box opposite the condensate trap. See Fig. 59.
10. Repeat Steps 5 through 8.
11. If a condensate pump is used, check with pump manufacturer to verify pump is safe for use with antifreeze used. Allow pump to start and pump anti-freeze to open drain.
12. Replace main door.
13. When furnace is re-started, flush condensate pump with clear water to check for proper operation before re-starting furnace.
14. Propylene glycol need not be removed before re-starting furnace.

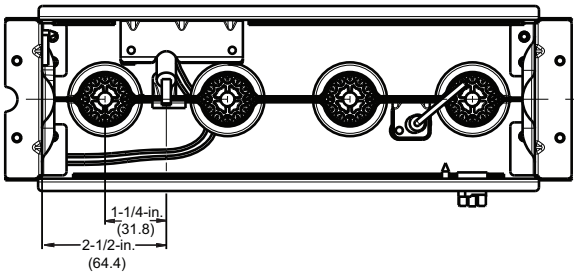


**Fig. 57 - Igniter Position - Top View**

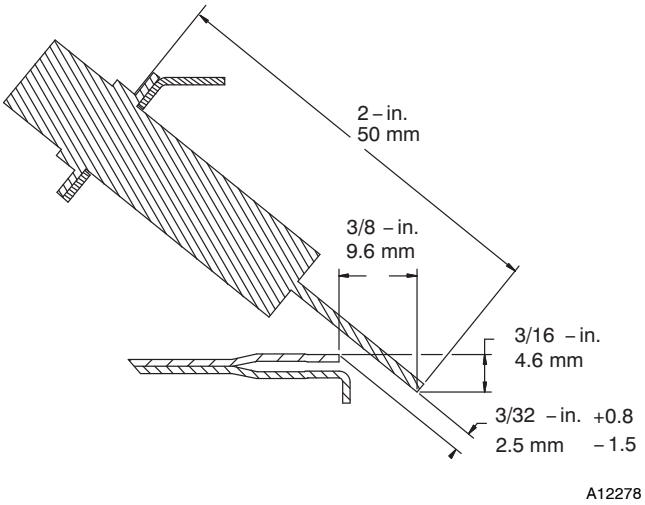


**Fig. 58 - Igniter Position - Side View**

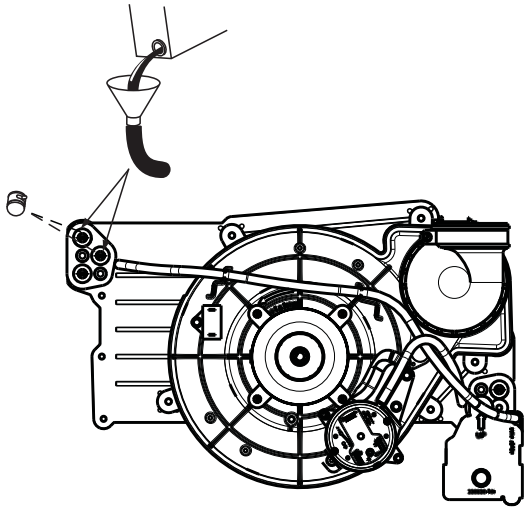

A11392

**Fig. 59 - Priming Condensate Trap (Appearance May Vary)**

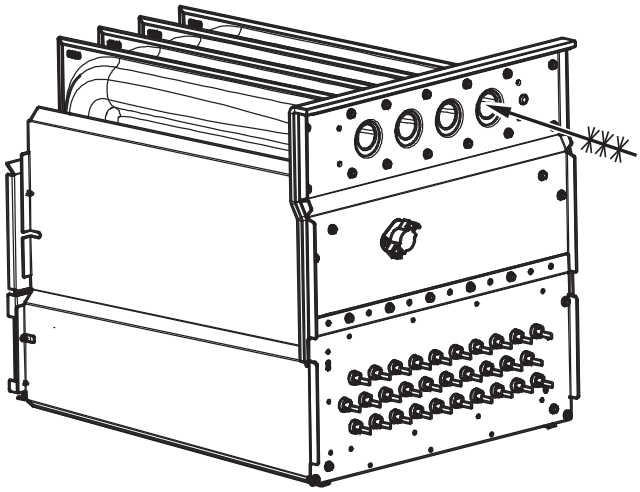

A11273

**Fig. 60 - Cleaning Heat Exchanger Cell**

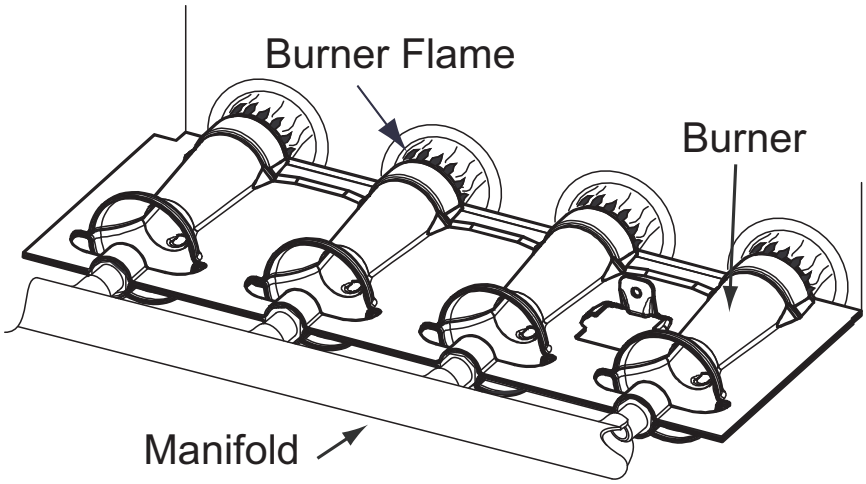


A11461

**Fig. 61 - Burner Flame**

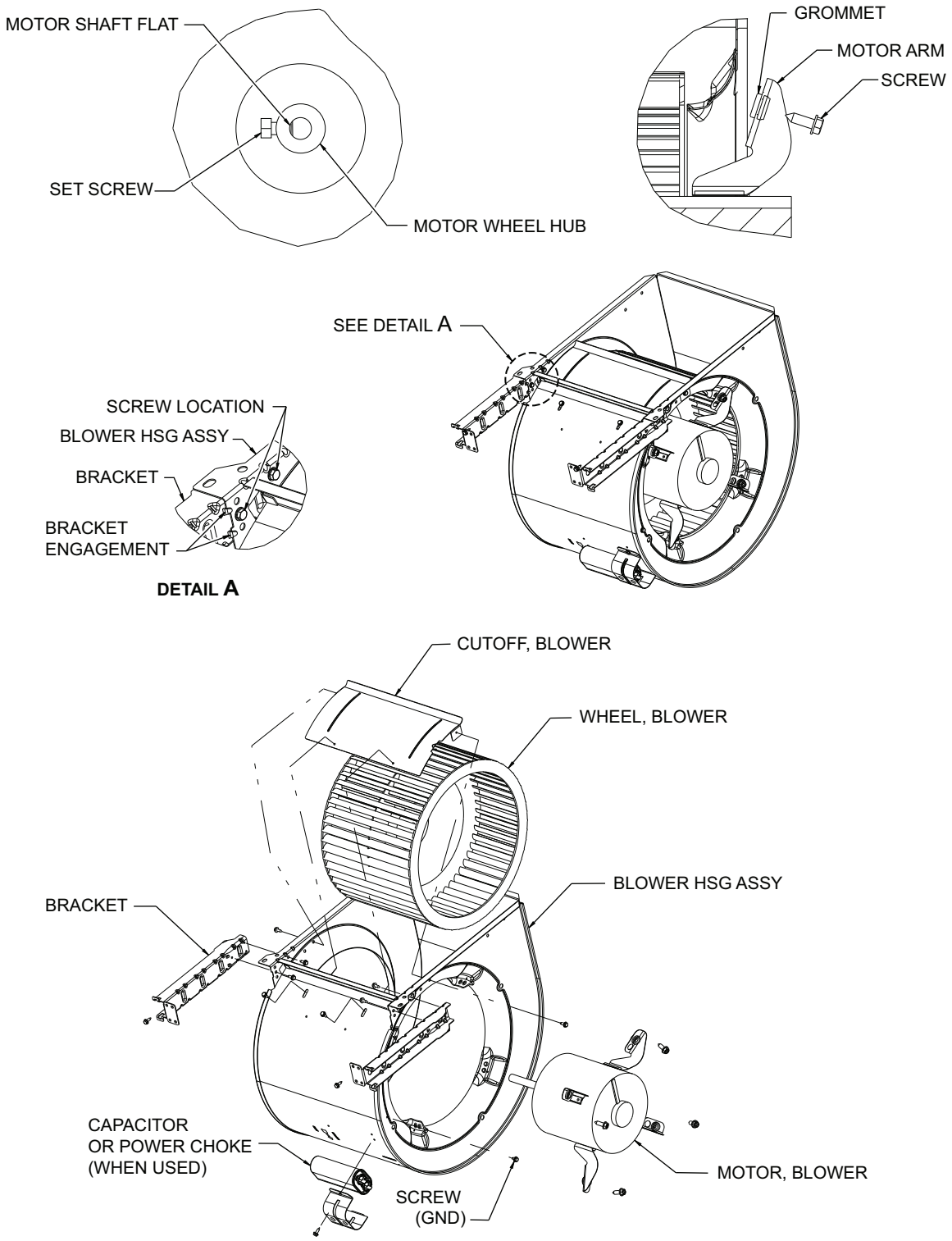


**Fig. 62 - Blower Assembly**

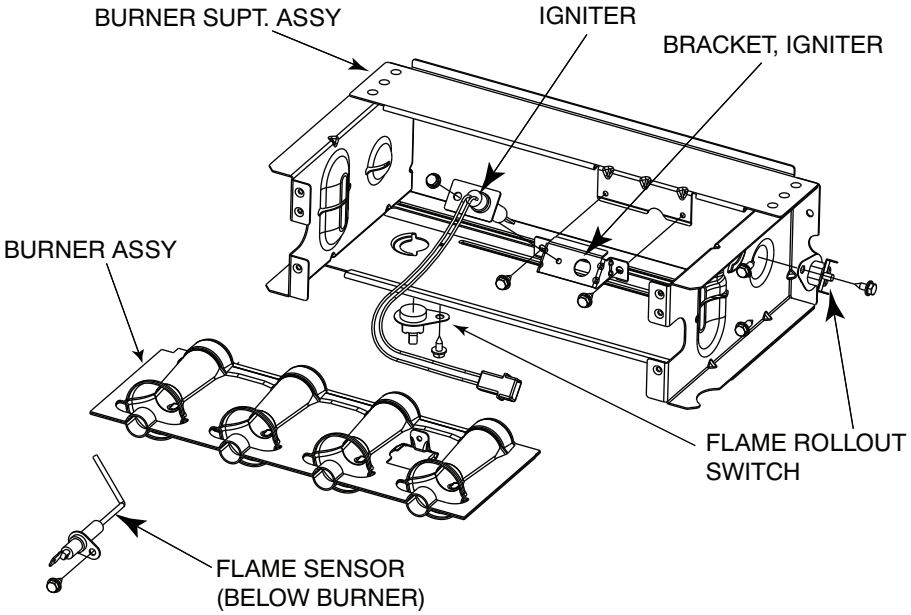


A11403

**Fig. 63 - Burner Assembly**

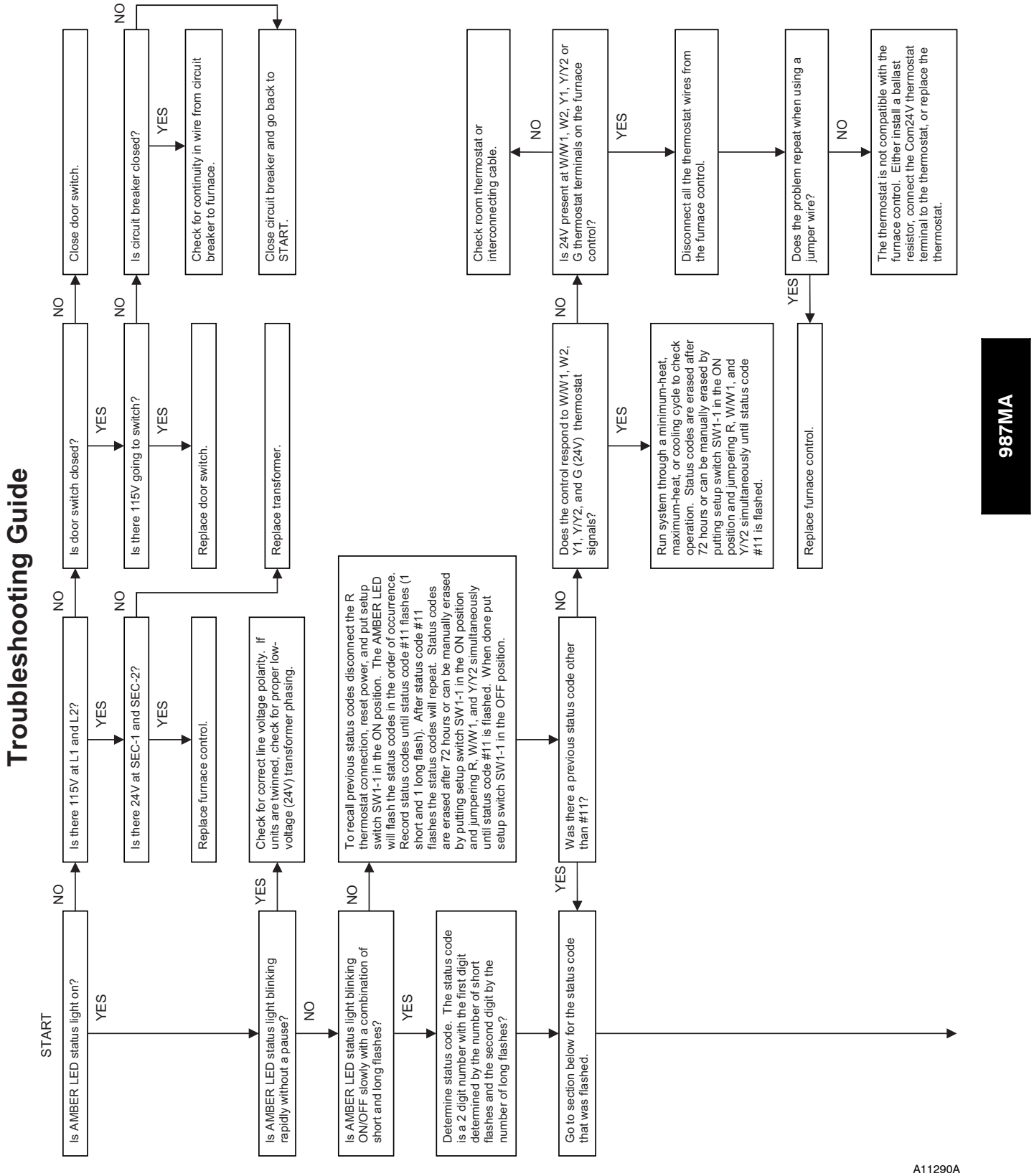


**Fig. 64 - Troubleshooting Guide**

11 NO PREVIOUS CODE – Status codes are erased after 72 hours or can be manually erased by putting setup switch SW1-1 in the ON position and jumpering R, W/W1, and Y/Y2 simultaneously until status code #11 is flashed. Run system through a minimum-heat, maximum-heat, or cooling cycle to check system.

12 BLOWER ON AFTER POWER UP – (115V OR 24V) – Normal operation. Blower runs for 90 seconds, if unit is powered up during a call for heat (R-W/W1 closed) or when (R-W/W1 opens) during the blower on-delay period.

13 LIMIT CIRCUIT LOCKOUT – Lockout occurs if the limit or flame rollout switch is open longer than 3 minutes or 10 successive limit trips occurred during maximum-heat. Control will auto-reset after 3 hours. See code 33.

14 IGNITION LOCKOUT – System failed to ignite gas and prove flame in 4 attempts. Control will auto-reset after 3 hours. See status code 34.

15 BLOWER MOTOR LOCKOUT – Indicates the blower failed to reach 250 RPM or the blower failed to communicate within 30 seconds after being turned ON in two successive heating cycles. Control will auto-reset after 3 hours. See code 41.

21 GAS HEATING LOCKOUT – Turn off power and wait 5 minutes to retry. Check for:
- Stuck closed gas valve relay on control.
- Miswire or short to gas valve BLUE wire.

22 ABNORMAL FLAME-PROVING SIGNAL Flame is proved while gas valve is de-energized. Inducer will run until fault is cleared. Check for:
- Stuck open or leaky gas valve.

23 PRESSURE SWITCH DID NOT OPEN – Check for:
- Obstructed pressure tube.
- Pressure switch stuck closed.

24 SECONDARY VOLTAGE FUSE IS OPEN Check for:
- Short circuit in secondary voltage (24V) wiring including thermostat leads. Disconnect thermostat leads to isolate short circuit.

32 LOW PRESSURE SWITCH DID NOT CLOSE OR REOPENED – If opens during blower on-delay period, blower will come on for the selected blower off-delay. If opens within 5 minutes after ignition the next heating cycle will be restricted to maximum-heat. Check for:
- Proper vent sizing.
- Air leak between vestibule and blower compartment.
- Low inlet gas pressure (if LGPS used).
- Restricted vent.
- Disconnected or obstructed pressure tubing.
- Defective or miswired pressure switches
- Excessive wind. If problem persists turn setup switch SW1-3 ON to boost inducer speed
- Plugged condensate drain.
- Water in vent piping, possible sagging pipe.

33 LIMIT CIRCUIT FAULT – Indicates the limit or a flame rollout switch is open or the furnace is operating in maximum-heat only mode due to 2 successive limit trips while operating at any rate ≤ 71% of maximum rate. Blower will run for 4 min. or until open switch remakes whichever is longer. If open longer than 3 min., code changes to lockout #13. If open less than 3 min. status code #33 continues to flash until blower shuts off. Flame rollout switch requires manual reset. Check for:
- Loose blower wheel.
- Defective switch or connections.
- Improper minimum- or maximum-heat gas input adjustment.
- Improper limit switch or no limit gasket.
- Dirty filter or restricted duct system.

34 IGNITION PROVING FAILURE – If flame is not sensed during the trial for ignition period, the control will repeat the ignition sequence 3 more times before lockout #14 occurs. If flame signal is lost during the blower on-delay period, blower will come on for the selected blower off-delay. Check the following items first before proceeding to the next step.
- Gas valve turned off.
- Manual shut-off valve.
- GREEN/YELLOW wire MUST be connected to furnace sheet metal.
- Flame sensor must not be grounded.

To determine whether the problem is in the gas valve, igniter, or flame sensor the system can be operated in component test mode. To check the igniter remove the R thermostat connection from the control, reset power, and put setup switch SW1-6 in the ON position to start the component test. Does the igniter glow orange/white by the end of the 15 second warm-up period?

NO → Unplug igniter harness from control and repeat component test by turning setup switch SW1-6 OFF and then back ON. Check for 115V between pin 3 and NEUTRAL-L2 on the control. Was 115V present for the 15 second period?

- NO → Replace furnace control.
- YES → Check for continuity in the harness and igniter. Replace defective component.

YES → Reconnect the R thermostat lead and set thermostat to call for heat. Connect voltmeter across gas valve BLUE and GREEN/YELLOW wires. Does gas valve receive 24V?

- NO → Check connections. If OK, replace control.
- YES → Does gas valve open and allow gas to flow?
  - NO → Check that all gas valves are turned on. Replace valve.
  - YES → Do the main burners ignite?
    - NO → Check for:
      - Inadequate flame carryover or rough ignition.
      - Low inlet gas pressure.
      - Proper firing rate.
    - YES → Do the main burners stay on?
      - YES → Allow unit to drop to min-heat, and check manifold pressure. Repeat test to check for intermittent operation.
      - NO → Repeat call for heat and check flame sensor current during trial for ignition period. Is the DC microamps below 0.5?
        - NO → Check connections and retry. If current is near typical value (4.0-6.0 nominal) and burners will not stay on, repeat check in max-heat. If burners will still not stay on replace control. If burners operate in max-heat then switch to intermediate-heat, check manifold pressure. If OK, check burner carryover and flame sensor location.
        - Clean flame sensor with fine steel wool and recheck current. Nominal current is 4.0 to 6.0 microamps.
        - Is current near typical value?
          - NO → Replace electrode.
          - YES → Will main burners ignite and stay on?
            - NO → Replace furnace control.
            - YES → Fixed.

43 LOW OR MEDIUM PRESSURE SWITCH OPEN WHILE MEDIUM OR HIGH PRESSURE SWITCH IS CLOSED - Check for:
- Low or Med press. switch stuck open.
- Disconnected or obstructed pressure tubing.
- Improper pressure switch wiring.
- Low inlet gas pressure (if LGPS used).
- Plugged condensate drain.
- Water in vent piping, possible sagging pipe.

45 CONTROL CIRCUITRY LOCKOUT Auto-reset after 1 hour lockout due to:
- Flame circuit failure.
- Gas valve relay stuck open.
- Software check error.

Reset power to clear lockout. Replace control if code repeats.

25 INVALID MODEL SELECTION OR SETUP ERROR – If status code 25 only flashes 4 times on power-up the control is missing its model plug PL4 and is defaulting to the model selection stored in memory. If status code 25 flashes continuously it could indicate any of the following:
- Model plug PL4 is missing and there is no valid model stored in permanent memory. This will happen if you forget to install the model plug PL4 on a service replacement control.
- Thermostat call with SW1-1 ON.
- Thermostat call with SW1-6 ON.
- SW1-1 and SW1-6 both ON.
- Two different furnace models twinned.
- Service replacement control is incorrect. Need modulating board with software version V17 or later.

31 MEDIUM PRESSURE SWITCH, HIGH PRESSURE SWITCH, OR PSR RELAY DID NOT CLOSE OR REOPENED - Check for:
- PSR relay may be defective.
- See status code 32.

35 GAS VALVE FAULT – Indicates the modulating gas valve failed to respond to a command from the furnace control or power to the gas valve electronics was interrupted. Check for:
- Intermittent RED, YELLOW, or ORANGE wire at gas valve or PL8 connections.

42 INDUCER MOTOR FAULT – Indicates the inducer motor has not started within 20 seconds after a call for heat, the inducer motor RPM is outside its valid range of operation, or the inducer RPM signal was lost for 5 seconds during operation. Check for:
- Proper vent sizing.
- Failed inducer motor.
- Restricted combustion air supply.
- Improper motor wiring.

41 BLOWER MOTOR FAULT – Indicates the blower failed to reach 250 RPM or the blower failed to communicate within the prescribed time limits. Thirty seconds after being turned ON or ten seconds during steady-state operation. Turn power off and check the following items first before proceeding to the next step.
- Rubbing blower wheel.
- Loose blower wheel.
- Wiring from furnace control to blower motor.

Remove the R thermostat connection from the furnace control, disconnect both connectors from the blower motor PL13 and PL14. Does the blower wheel turn freely?

NO → Replace the blower control module attached to the blower motor. Follow the instructions with the blower control module to make sure the entire blower motor does not need to be replaced.

YES → Turn power back on. Is there 115VAC at PL14-5 and PL14-4?

NO → You have an open wire or bad terminal on either the BLACK or WHITE power leads between the furnace control and the blower motor. If you have a power choke disconnect it and check continuity.

YES → Is there 12-VDC at PL13-1 RED (+) and PL13-4 GREEN (-)?

YES → Is there 5-VDC at PL13-2 YELLOW (+) and PL13-4 GREEN (-)?

NO → Is there 12-VDC at PL3-1 RED (+) and PL3-2 GREEN (-)?

YES → You have an open wire or bad terminal on either the RED or GREEN wire between the furnace control and the blower motor.

NO → Replace the furnace control.

NO → Is there 5-VDC at PL3-3 YELLOW (+) and PL3-2 GREEN (-)?

NO → Replace the furnace control.

YES → You have an open wire or bad terminal on the YELLOW wire between the furnace control and the blower motor.

YES → The voltage just measured should be very stable and should not fluctuate more than .02-VDC. If the voltage fluctuates more than this get a different voltmeter before proceeding.

Turn power off, reconnect PL13 and PL14 to the blower motor, then turn power back on. Connect a DC voltmeter across PL3-3 YELLOW (+) and PL3-2 GREEN (-). Does the voltage fluctuate more than it did in the previous step?

YES → Replace the furnace control.

NO → Turn power off, disconnect PL13 and PL14 from the blower motor, then turn power back on. Connect a DC voltmeter across PL13-3 BLUE (+) and PL13-4 GREEN (-). The voltage should be near 0-VDC but it will fluctuate briefly several times a second. If you have an analog voltmeter the needle will briefly go high several times a second. If you have a digital voltmeter with a bar graph it will show a large change in magnitude on the bar graph several times a second. If you have a standard digital voltmeter it will show a brief fluctuation in voltage and the magnitude may vary depending on the voltmeter used.

Does the voltage fluctuate as described in the previous step?

YES → Replace the blower control module attached to the blower motor. Follow the instructions with the blower control module to make sure the entire blower motor does not need to be replaced.

NO → Connect a DC voltmeter across PL3-4 BLUE (+) and PL3-2 GREEN (-). Does the voltage fluctuate as described two steps back?

YES → You have an open wire or bad terminal on the BLUE wire between the furnace control and the blower motor.

NO → Replace the furnace control.

**987MA**

A11290C

## SEQUENCE OF OPERATION

**⚠ CAUTION**

**UNIT OPERATION HAZARD**

Failure to follow this caution may result in intermittent unit operation.

Furnace control must be grounded for proper operation or control will lock out. Control is grounded through green/yellow wire routed to gas valve and burner box screw.

Using the schematic diagram, follow the sequence of operation through the different modes. See Fig. 65. Read and follow the wiring diagram very carefully!!

**NOTE**: If a power interruption occurs during a call for heat (W/W1 or W/W1-and-W2), the control will start a 90-second blower-only ON period two seconds after power is restored, if the thermostat is still calling for gas heating. The amber LED light will flash code 12 during the 90-second period, after which the LED will be ON continuous, as long as no faults are detected. After the 90-second period, the furnace will respond to the thermostat normally.

The blower door must be installed for power to be conducted through the blower door interlock switch ILK to the furnace control CPU, transformer TRAN, inducer motor IDM, blower motor BLWM, hot surface igniter HSI, and gas valve GV.

### Communicating Control and Modulating Heating (Adaptive Mode)

Best comfort will be attained when a communicating wall control is used with this product. Wiring and set-up instructions are provided with the communicating control. See the furnace data sheet accessory section for help in selecting the appropriate communicating control for this furnace.

When a communicating control is used, the furnace will modulate through its full operation range, or can be limited via the minimum and maximum cfm configurations.

Operation of the furnace at the beginning and end of each heating cycle will be the same as detailed below in the Single-Stage Thermostat section EXCEPT that the communicating control will send modulating rate command signals through the communication bus rather than energizing the 24-v thermostat terminals. Note that the R to W/W1 circuit signal will be controlled by the COMMR relay on the furnace control. See the wiring diagram in Fig. 65 .

### Single-Stage Thermostat and Modulating Heating (Adaptive Mode)

See Fig. 34 and 35 for thermostat connections.

**NOTE**: Minimum-heat only switch SW1-2 selects the minimum-heat only operation mode when ON. Intermediate-heat only switch SW4-2 selects intermediate-heat only operation mode when ON. If both switches are ON the furnace control will default to intermediate-heat. If either or both switches are ON, the furnace control will operate at two-stages only as referenced in Two Stage Thermostat section below. If both switches are OFF the furnace control will operate in the adaptive heating mode in response to a call for heat. See Fig. 56. When the W2 thermostat terminal is energized it will always cause maximum-heat operation as long as the R to W circuit is closed, regardless of the setting of the minimum-heat or intermediate-heat only switches.

This furnace can operate as a modulating furnace with a single-stage thermostat because the furnace control CPU includes a programmed adaptive sequence of controlled operation, which selects a modulated rate between minimum- and maximum-heat. This selection is based upon the stored history of the length of previous gas-heating periods of the single-stage thermostat.

The furnace will start up in either intermediate-, or maximum-heat. The furnace will transition and operate at minimum-heat or the calculated modulating rate after starting and operating for 45 seconds at intermediate-heat. The furnace control CPU defaults to minimum-heat on the first thermostat cycle and calculates the modulating rate that the furnace should run at for 19 minutes on subsequent heat cycles.

If the power is interrupted, the stored modulating rate is erased and the furnace control will select intermediate-heat for 45 seconds, minimum-heat for 19 minutes and then switch to maximum-heat, as long as the thermostat continues to call for heat. The furnace control CPU then uses this information to calculate the modulating rate the furnace will operate at on the next heating cycle. If the calculated modulating rate is between 40% - 99% then the furnace control CPU will operate for 45 seconds at intermediate-heat, and then operate at the calculated modulating rate for up to 19 minutes and then switch to maximum-heat as long as the thermostat continues to call for heat. If the calculated modulating rate is 100% then the furnace control will only operate at maximum-heat until the thermostat is satisfied.

The wall thermostat "calls for heat", closing the R to W circuit. The furnace control CPU performs a self-check, verifies the low, medium, and high pressure switch contacts LPS,MPS, and HPS are open, then de-energizes the PSR relay to close the NC contact.

1. **Inducer Prepurge Period** - The furnace control CPU turns on inducer motor IDM and slowly increases the inducer motor speed. After the low pressure switch LPS closes the furnace control CPU continues to increase the inducer motor speed until the medium pressure switch MPS closes. When the medium pressure switch MPS closes, inducer motor RPM is noted by the furnace control CPU, and a 25-second prepurge period begins. The RPM is used to evaluate vent system resistance. This evaluation is then used to determine the required RPM necessary to operate the inducer motor during pre-purge, the first 45 seconds of intermediate-heat, or any modulating rate that the furnace will transition to after the blower on-delay is completed.

**NOTE**: The heat cycle can start in either intermediate- or maximum-heat. If a maximum-heat cycle is initiated, the furnace control CPU will continue to increase the inducer motor speed after the medium pressure switch MPS closes. When the medium pressure switch closes, inducer motor RPM is noted by the furnace control CPU, and a 25-second prepurge period begins. The RPM is used to evaluate vent system restriction. This evaluation is then used to determine the required RPM necessary to operate the inducer motor in maximum-heat pre-purge, or maximum-heat. The high pressure switch HPS should be closed before ignition but the furnace control ignores this input until after ignition occurs.

2. **Igniter Warm-Up** - At the end of the prepurge period, the Hot-Surface Igniter HSI is energized for a 17-second igniter warm-up period
3. **Trial-For-Ignition Sequence** - When the igniter warm-up period is completed the main gas valve relay contact GVR closes to energize the gas valve solenoid GV (pin 5). The gas valve solenoid GV (pin 5) permits gas flow to the burners where it is ignited. Five seconds after the GVR closes, a 2-second Flame-Proving period begins. The HSI igniter will remain energized until flame is sensed or until the 2-second flame proving period begins.
4. **Flame-Proving** - When the burner flame is proved at the flame-proving sensor electrode FSE, the furnace control CPU begins the blower-ON delay period and continues to hold the gas valve GV (pin 5) open. If the burner flame is not proved within two seconds, the furnace control CPU will close the gas valve GV (pin 5), and the furnace control

CPU will repeat the ignition sequence for up to three more Trials-For-Ignition before going to Ignition-Lockout. **Lockout will be reset** automatically after three hours, or by momentarily interrupting 115 vac power to the furnace, or by interrupting 24 vac power at SEC1 or SEC2 to the furnace control CPU (not at W/W1, G, R, etc.).

If flame is proved when flame should not be present, the furnace control CPU will lock out of Gas-Heating mode and operate the inducer motor IDM at full speed until flame is no longer proved.

5. **Inducer Speed Change** - If the cycle starts in intermediate-heat, the furnace control CPU reduces the inducer speed slightly after flame sense. If cycle starts in maximum-heat, the furnace control CPU increases the inducer speed after flame sense.
6. **Blower-On delay** — If the burner flame is proven, the blower-ON delay for intermediate-heat and maximum-heat are as follows:

   **Intermediate-heat** - 45 seconds after the gas valve GV (pin 5) is opened the blower motor BLWM is turned ON at the modulating heat airflow.

   **Maximum-heat** - 25 seconds after the gas valve GV (pin 5) is opened the BLWM is turned ON at maximum-heat airflow.

   Simultaneously, the humidifier terminal HUM and electronic air cleaner terminal EAC-1 are energized and remain energized throughout the heating cycle.
7. **Switching from Intermediate-Heat to a Low Range Input** - If the furnace control CPU switches from intermediate-heat to a low range input (low range input is an input rate less than or equal to 51% of full rate), the furnace control CPU will turn the blower ON or switch to the modulating heat airflow, energize the PSR relay to open the NC contact, and slowly decrease the inducer motor speed to the desired inducer RPM.

   **Switching from a Intermediate-Heat to a Medium Range Input -** If the furnace control CPU switches from intermediate-heat to a different medium range input (medium range input is an input rate between 52% and 71% of full rate), the furnace control CPU will turn the blower ON or switch to the modulating heat airflow, and continue to maintain the inducer motor speed or change it further if required.

   **Switching from a Intermediate-Heat to a High Range Input -** If the furnace control CPU switches from intermediate-heat to a high range input (high range input is an input rate greater than or equal to 72% of full rate), the furnace control CPU will turn the blower ON or switch to the modulating heat airflow, and increase the inducer motor speed to the desired inducer motor RPM.

   **Switching from Low Range Input to Maximum-Heat -** If the furnace control CPU switches from a low range input to maximum-heat, the furnace control CPU will de-energize the PSR relay to close the NC contact and slowly increase the inducer motor speed until the medium pressure switch MPS closes. When the medium pressure switch MPS closes the inducer motor RPM is noted by the furnace control CPU. The RPM is used to evaluate vent system resistance. This evaluation is then used to determine the required RPM necessary to operate the inducer motor at maximum-heat. The blower motor BLWM will transition to maximum-heat airflow five seconds after the furnace control CPU switches from a low range input to maximum-heat. As the inducer RPM increases, the high pressure switch HPS should close.

   **Switching from Medium Range Input to Maximum-Heat** - If the furnace control CPU switches from medium range input to maximum-heat, the furnace control CPU will increase the inducer motor speed to the maximum-heat inducer motor RPM. The blower motor BLWM will transition to the maximum-heat airflow five seconds after the furnace control CPU switches from a medium range input to maximum-heat. As the inducer RPM increases, the high pressure switch HPS should close.
8. **Blower-Off Delay** — When the thermostat is satisfied, the R to W circuit is opened, de-energizing the gas valve GV (pin 5), stopping gas flow to the burners, and humidifier terminal HUM. The inducer motor IDM will remain energized for a 15-second post-purge period. The blower motor BLWM and air cleaner terminal EAC-1 will remain energized at minimum-heat airflow or transition to minimum-heat airflow for 90, 120, 150, or 180 seconds (depending on selection at blower-OFF delay switches). The furnace control CPU is factory-set for a 120-second blower- OFF delay.

## Two-Stage Thermostat and Modulating Heating (Adaptive Mode)

Operation of Modulating Heating (Adaptive Mode; SW1-2 and SW4-2 are both OFF) with a two-stage thermostat is the same as with a single-stage thermostat, EXCEPT for the following:

If the two-stage thermostat R-W2 circuit closes along with the R to W/W1 circuit, while the furnace is operating at any capacity less than maximum, the furnace will switch to the maximum heating capacity. At this point, the furnace control heating algorithm is overridden and the two-stage thermostat takes control of staging until BOTH R to W/W1 and R to W2 circuits are opened.

The furnace with transition back to the lower heating capacity if the two-stage thermostat opens the R-W2 circuit, but leaves R to W/W1 circuit closed. The furnace control will continue to follow the commands from the two-stage thermostat for W/W1 and W2, until the R to W/W1 circuit is opened.

After the two-stage thermostat opens both the R to W/W1 and R to W2 circuits, the adaptive algorithm will set the beginning capacity of the next heating cycle to the same value as the heating cycle that most recently completed.

## Two-Stage Thermostat and Two-Stage Minimum/Maximum Heating

See **Fig.** 34 and 35 for thermostat connections.

**NOTE**: In this mode, the minimum-heat only switch SW1-2 must be ON to select the minimum-heat only operation mode in response to closing the thermostat R to W1 circuit. Closing the thermostat R to W1-and-W2 circuits always causes maximum-heat operation, regardless of the setting of the minimum-heat only switch.

The furnace will start up in either intermediate-, or maximum-heat. The furnace will operate in minimum-heat after starting and operating for 1 minute at intermediate-heat before transitioning to minimum-heat.

The wall thermostat "calls for heat", closing the R to W1 circuit for minimum-heat or closing the R to W1-and-W2 circuits for maximum-heat. The furnace control performs a self-check, and verifies the low, medium and high pressure switch contacts LPS, MPS and HPS are open, then de-energizes the PSR relay to close the NC contact.

The start up and shut down functions and delays described above apply to the 2-stage minimum/maximum heating mode as well, except for switching from maximum- to minimum-heat.

1. **Switching from Maximum- to Minimum-Heat** — If the thermostat R to W2 circuit opens, and the R to W1 circuit remains closed, the furnace control CPU will gradually decrease the inducer motor speed to the required intermediate-heat RPM. When the inducer motor IDM reduces pressure sufficiently, the high pressure switch HPS will open and the gas rate will be changed to intermediate-heat. The gas valve solenoid GV (pin 5) will remain energized as long as the low pressure switch LPS remains closed. When the

inducer motor speed gets within 15% of the required intermediate-heat RPM the furnace control CPU will start a 5 second blower airflow change delay. After the 5 second blower airflow change delay is completed the blower airflow will transition to minimum-heat airflow. At this point the furnace control CPU will energize the PSR relay to open the NC contact and slowly decrease the inducer motor speed to the required minimum-heat RPM. When the PSR relay is energized and the NC contact opens the furnace control CPU will reduce the gas rate to minimum-heat RPM.

## Two-Stage Thermostat and Two-Stage Intermediate/ Maximum Heating

See Fig. 34 and 35 for thermostat connections

**NOTE**: In this mode the intermediate-heat only switch SW4-2 must be ON to select the intermediate-heat only operation mode in response to closing the thermostat R to W1 circuit. Closing the thermostat R to W1-and-W2 circuits always causes maximum-heat operation, regardless of the setting of the intermediate-heat only switch.

The wall thermostat "calls for heat", closing the R to W1 circuit for intermediate-heat or closing the R to W1-and-W2 circuits for maximum-heat. The furnace control performs a self-check, and verifies the low, medium and high pressure switch contacts LPS, MPS and HPS are open , then de-energizes the PSR relay to close the NC contact.

The start up and shut down functions and delays described above apply to the 2-stage intermediate/maximum heating mode as well, except for switching from maximum- to intermediate-heat.

1. **Switching from Maximum- to Intermediate-Heat —** If the thermostat R to W2 circuit opens, and the R to W1 circuit remains closed, the furnace control CPU will gradually decrease the inducer motor speed to the required intermediate-heat RPM. When the inducer motor IDM reduces pressure sufficiently, the high pressure switch HPS will open and the gas rate will be changed to intermediate-heat. When the inducer motor speed gets within 15% of the required intermediate-heat RPM the furnace control CPU will start a 5 second blower airflow change delay. After the 5 second blower airflow change delay is completed the blower airflow will transition to intermediate-heat airflow.

## Cooling Mode

The thermostat "calls for cooling."

1. **Single-Speed Cooling**

See Fig. 34 and 35 for thermostat connections.

The thermostat closes the R to G-and-Y circuits. The R to Y circuit starts the outdoor unit, and the R to G-and-Y/Y2 circuits start the furnace blower motor BLWM on cooling airflow. Cooling airflow is based on the A/C selection shown in Fig. 56.

The electronic air cleaner terminal EAC-1 is energized with 115 vac when the blower motor BLWM is operating. When the thermostat is satisfied, the R to G-and-Y circuits are opened. The outdoor unit will stop, and the furnace blower motor BLWM will continue operating at cooling airflow for an additional 90 seconds. Jumper Y/Y2 to DHUM to reduce the cooling off-delay to 5 seconds. See Fig. 34.

2. **Single-Stage Thermostat and Two-Speed Cooling** (Adaptive Mode)

See Fig. 34 and 35 for thermostat connections.

This furnace can operate a two-speed cooling unit with a single-stage thermostat because the furnace control CPU includes a programmed adaptive sequence of controlled operation, which selects low-cooling or high-cooling operation. This selection is based upon the stored history of the length of previous cooling period of the single-stage thermostat.

NOTE: The air conditioning relay disable jumper ACRDJ must be connected to enable the adaptive cooling mode in response to a call for cooling. See Fig. 34. When in place the furnace control CPU can turn on the air conditioning relay ACR to energize the Y/Y2 terminal and switch the outdoor unit to high-cooling.

The furnace control CPU can start up the cooling unit in either low- or high-cooling. If starting up in low-cooling, the furnace control CPU determines the low-cooling on-time (from 0 to 20 minutes) which is permitted before switching to high-cooling.

If the power is interrupted, the stored history is erased and the furnace control CPU will select low-cooling for up to 20 minutes and then energize the air conditioning relay ACR to energize the Y/Y2 terminal and switch the outdoor unit to high-cooling, as long as the thermostat continues to call for cooling. Subsequent selection is based on stored history of the thermostat cycle times. The wall thermostat "calls for cooling", closing the R to G and- Y circuits. The R to Y1 circuit starts the outdoor unit on low-cooling speed, and the R to G-and-Y1 circuits starts the furnace blower motor BLWM at low-cooling airflow which is the true on-board CF selection as shown in Fig. 56.

If the furnace control CPU switches from low-cooling to high cooling, the furnace control CPU will energize the air conditioning relay ACR. When the air conditioning relay ACR is energized the R to Y1-and-Y2 circuits switch the outdoor unit to high-cooling speed, and the R to G-and-Y1- and-Y/Y2 circuits transition the furnace blower motor BLWM to high-cooling airflow. High-cooling airflow is based on the A/C selection shown in Fig. 56.

**NOTE**: When transitioning from low-cooling to high-cooling the outdoor unit compressor will shut down for 1 minute while the furnace blower motor BLWM transitions to run at high-cooling airflow.

The electronic air cleaner terminal EAC-1 is energized with 115 vac whenever the blower motor BLWM is operating.

When the thermostat is satisfied, the R to G-and-Y circuit are opened. The outdoor unit stops, and the furnace blower BLWM and electronic air cleaner terminal EAC-1 will remain energized for an additional 90 seconds. Jumper Y1 to DHUM to reduce the cooling off-delay to 5 seconds. See Fig. 34.

3. **Two Stage Thermostat and Two-Speed Cooling**

See Fig. 34 and 35 for thermostat connections.

**NOTE**: The air conditioning relay disable jumper ACRDJ must be disconnected to allow thermostat control of the outdoor unit staging. See Fig. 34.

The thermostat closes the R to G-and-Y1 circuits for low cooling or closes the R to G-and-Y1-and-Y2 circuits for high cooling. The R to Y1 circuit starts the outdoor unit on low cooling speed, and the R to G-and-Y1 circuit starts the furnace blower motor BLWM at low-cooling airflow which is the true on-board CF selection as shown in Fig. 56. The R to Y1-and-Y2 circuits start the outdoor unit on high-cooling speed, and the R to G-and-Y/Y2 circuits start the furnace blower motor BLWM at high-cooling airflow. High-cooling airflow is based on the A/C selection shown in Fig. 56.

The electronic air cleaner terminal EAC-1 is energized with 115 vac whenever the blower motor BLWM is operating.

When the thermostat is satisfied, the R to G-and-Y1 or R to G-and-Y1-and-Y2 circuits are opened. The outdoor unit stops, and the furnace blower BLWM and electronic air cleaner terminal EAC-1 will remain energized for an additional 90 seconds. Jumper Y1 to DHUM to reduce the cooling off-delay to 5 seconds. See Fig. 56.

4. **Dehumidification Mode**

See Fig. 34 and 35 for thermostat connections.

The dehumidification output, D or DHUM on the Thermostat should be connected to the furnace control thermostat terminal

DHUM. When there is a dehumidify demand, the DHUM input is activated, which means 24 vac signal is removed from the DHUM input terminal. In other words, the DHUM input logic is reversed. The DHUM input is turned ON when no dehumidify demand exists. Once 24 vac is detected by the furnace control, dehumidification capability is activated. If the DHUM input is removed for more than 48 hours, the furnace control reverts back to non-dehumidification mode.

The cooling operation described above in the Cooling Mode section also applies to Dehumidification mode. The exceptions are listed below:

a. **Low cooling** – When the R to G-and-Y1 circuit is closed and there is a demand for dehumidification, the furnace blower motor BLWM will drop the blower airflow to 86% of low cooling airflow which is the true on-board CF selection as shown in Fig. 56.

b. **High cooling** – When the R to G-and Y/Y2 circuit is closed and there is a demand for dehumidification, the furnace blower motor BLWM will drop the blower airflow to 86% of high-cooling airflow. High-cooling airflow is based on the A/C selection shown in Fig. 56.

c. **Cooling off-delay** – When the "call for cooling" is satisfied and there is a demand for dehumidification, the cooling blower-off delay is decreased from 90 seconds to 5 seconds.

## Super Dehumidify Mode

Super-Dehumidify mode can only be entered if the furnace control is in the Dehumidification mode and there is a demand for dehumidification. The cooling operation described in Cooling Mode section above also applies to Super Dehumidify Mode. The exceptions are listed below:

1. **Low cooling** – When the R to Y1 circuit is closed, R to G circuit is open, and there is a demand for dehumidification, the furnace blower motor BLWM will drop the blower airflow to 65% of low-cooling airflow for a maximum of 10 minutes each cooling cycle or until the R to G circuit closes or the demand for dehumidification is satisfied. Low-cooling airflow is the true on-board CF selection as shown in Fig. 56.
2. **High cooling** – When the R to Y/Y2 circuit is closed, R to G circuit is open, and there is a demand for dehumidification, the furnace blower motor BLWM will drop the blower airflow to 65% of high-cooling airflow for a maximum of 10 minutes each cooling cycle or until the R to G circuit closes or the demand for dehumidification is satisfied. High-cooling airflow is based on the A/C selection shown in Fig. 56.
3. **Cooling off-delay** – When the "call for cooling" is satisfied and there is a demand for dehumidification, the cooling blower-off delay is decreased from 90 seconds to 5 seconds.

## Continuous Blower Mode

When the R to G circuit is closed by the thermostat, the blower motor BLWM will operate at continuous blower airflow. Continuous blower airflow selection is initially based on the CF selection shown in Fig. 56. Factory default is shown in Fig. 56. Terminal EAC-1 is energized as long as the blower motor BLWM is energized.

During a call for heat, the furnace control CPU will transition the blower motor BLWM to continuous blower airflow, minimum-heat airflow, or the mid-range airflow, whichever is lowest. The blower motor BLWM will remain ON until the main burners ignite then shut OFF and remain OFF for the blower-ON delay (45 seconds in intermediate heat, and 25 seconds in maximum-heat), allowing the furnace heat exchangers to heat up more quickly, then restarts at the end of the blower-ON delay period at modulating or maximum-heat airflow respectively.

The blower motor BLWM will revert to continuous-blower airflow after the heating cycle is completed. When the thermostat satisfies, the furnace control CPU will drop the blower motor BLWM to minimum-heat airflow during the selected blower-OFF delay period before transitioning to continuous-blower airflow.

When the thermostat "calls for low-cooling", the blower motor BLWM will operate at low-cooling airflow. When the thermostat is satisfied, the blower motor BLWM will operate an additional 90 seconds at low-cooling airflow before transitioning back to continuous-blower airflow.

When the thermostat "calls for high-cooling", the blower motor BLWM will operate at high cooling airflow. When the thermostat is satisfied, the blower motor BLWM will operate an additional 90 seconds at high-cooling airflow before transitioning back to continuous-blower airflow.

When the R to G circuit is opened, the blower motor BLWM will continue operating for an additional 5 seconds, if no other function requires blower motor BLWM operation.

## Continuous Blower Speed Selection from Thermostat

To select different continuous-blower airflows from the room thermostat, momentarily turn off the FAN switch or push button on the room thermostat for 1-3 seconds after the blower motor BLWM is operating.

The furnace control CPU will shift the continuous-blower airflow from the factory setting to the next highest CF selection airflow as shown in Fig. 56. Momentarily turning off the FAN switch again at the thermostat will shift the continuous-blower airflow up one more increment. If you repeat this procedure enough you will eventually shift the continuous blower airflow to the lowest CF selection as shown in Fig. 56. The selection can be changed as many times as desired and is stored in the memory to be automatically used following a power interruption.

## Heat Pump

See Fig. 34 and 35 for thermostat connections. When installed with a heat pump, the furnace control automatically changes the timing sequence to avoid long blower off times during demand defrost cycles. Whenever W/W1 is energized along with Y1 or Y/Y2, the furnace control CPU will transition to or bring on the blower motor BLWM at cooling airflow, minimum-heat airflow, or the mid-range airflow, whichever is lowest. The blower motor BLWM will remain on until the main burners ignite then shut OFF and remain OFF for 25 seconds before coming back on at modulating heat airflow. When the W/W1 input signal disappears, the furnace control begins a normal inducer post-purge period while changing the blower airflow. If Y/Y2 input is still energized the furnace control CPU will transition the blower motor BLWM airflow to cooling airflow. If Y/Y2 input signal disappears and the Y1 input is still energized the furnace control CPU will transition the blower motor BLWM to low-cooling airflow. If both the Y1 and Y/Y2 signals disappear at the same time, the blower motor BLWM will remain on at minimum-heat airflow for the selected blower-OFF delay period. At the end of the blower-OFF delay, the blower motor BLWM will shut OFF unless G is still energized, in which case the blower motor BLWM will operate at continuous blower airflow.

## Component Self Test

Refer to page 80 for instructions.

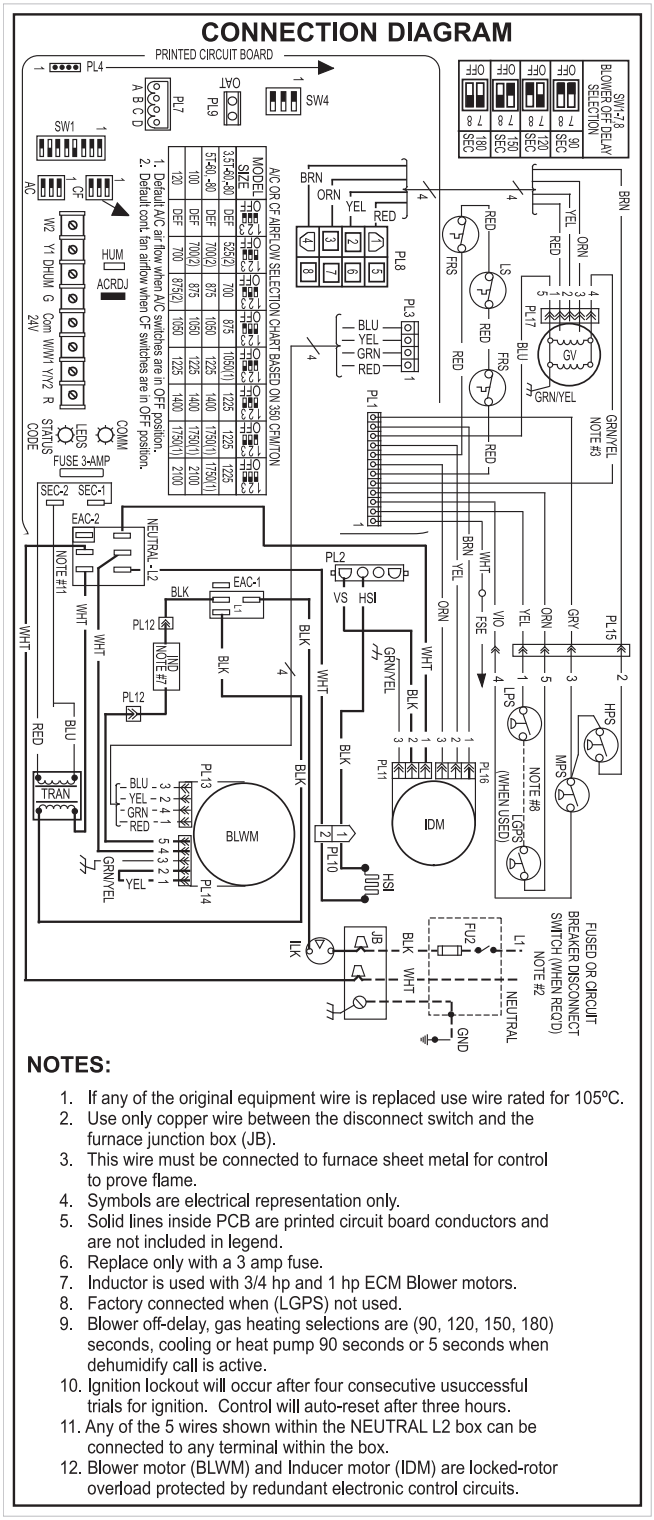


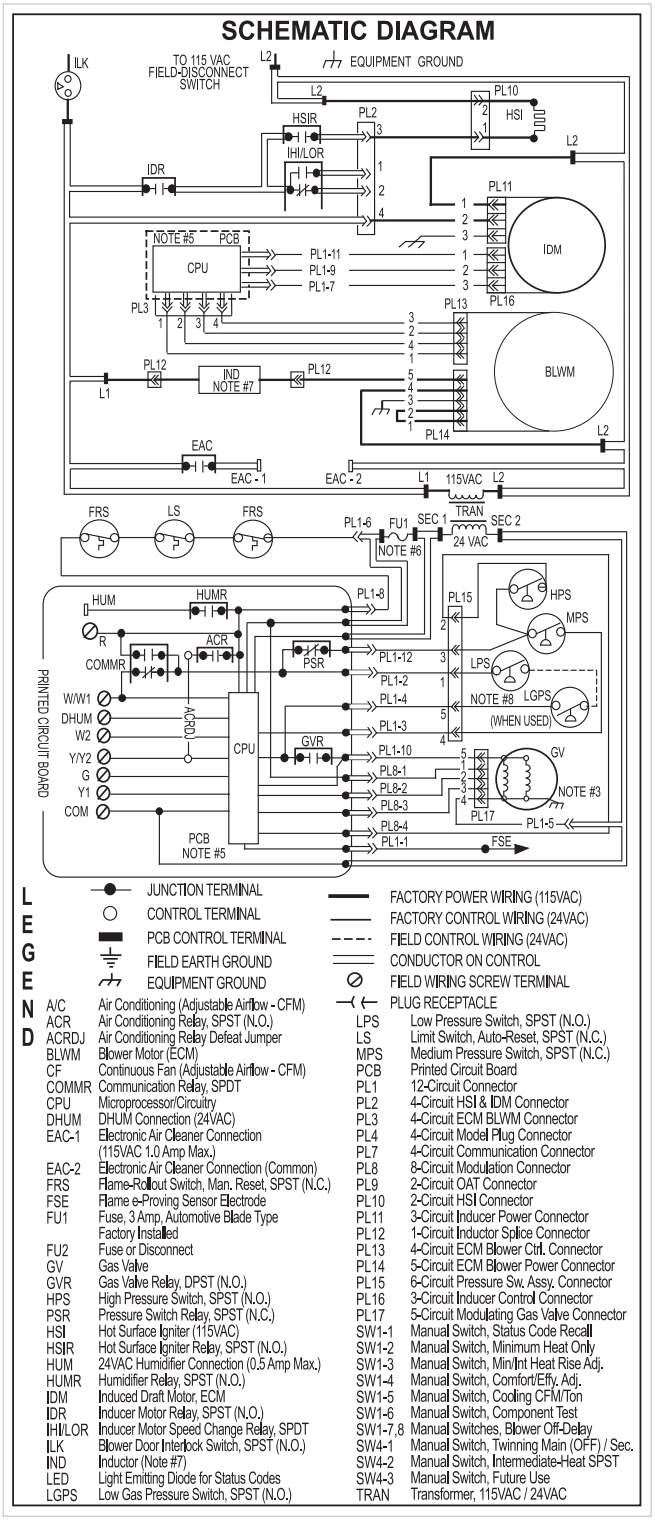


338307-201 Rev. F

A11595

**NOTES:**

1. If any of the original equipment wire is replaced use wire rated for 105ºC.
2. Use only copper wire between the disconnect switch and the furnace junction box (JB).
3. This wire must be connected to furnace sheet metal for control to prove flame.
4. Symbols are electrical representation only.
5. Solid lines inside PCB are printed circuit board conductors and are not included in legend.
6. Replace only with a 3 amp fuse.
7. Inductor is used with 3/4 hp and 1 hp ECM Blower motors.
8. Factory connected when (LGPS) not used.
9. Blower off-delay, gas heating selections are (90, 120, 150, 180) seconds, cooling or heat pump 90 seconds or 5 seconds when dehumidify call is active.
10. Ignition lockout will occur after four consecutive usuccessful trials for ignition. Control will auto-reset after three hours.
11. Any of the 5 wires shown within the NEUTRAL L2 box can be connected to any terminal within the box.
12. Blower motor (BLWM) and Inducer motor (IDM) are locked-rotor overload protected by redundant electronic control circuits.

**Fig. 65 - Wiring Diagram**

# PARTS REPLACEMENT INFORMATION GUIDE

### Casing Group
Blower door
Bottom plate
Control door
Door knob assembly
Top filler plate

### Electrical Group
3-Amp fuse
Circuit board
Control box
Door switch
Junction box
Limit switch(es)
Transformer

### Blower Group
Blower housing
Blower motor
Blower wheel
Capacitor (when used)
Capacitor strap (when used)
Cut-off plate
Power choke (where used)

### Filter Group
Filter(s)
Media Cabinet (when used)

### Gas Control Group
Burner
Flame sensor
Gas valve
Hot surface igniter
Manifold
Orifice

### Heat Exchanger Group
Containment plate
Coupling Box
Heat exchanger assembly
Primary HX cell panel
Secondary HX assembly
Tubing gaskets

### Inducer Group
Collector box
Condensate trap
Condensate trap elbow
Gaskets
Inducer
Inducer assembly
Inducer motor capacitor (when used)
Inducer motor module (when used)
Pressure switch(es)



**TO OBTAIN INFORMATION ON PARTS:** Consult your installing dealer or classified section of your local telephone directory under "Heating Equipment" or "Air Conditioning Contractors and Systems" headings for dealer listing by brand name or contact:

**BRYANT HEATING & COOLING SYSTEMS**
Consumer Relations Department
P.O. Box 4952
Syracuse, New York 13221-4952
1-800-428-4326

Have available the model number, series number, and serial number located on the unit rating plate to ensure correct replacement part.

**Model Nomenclature**

| MODEL | COOLING CAPACITY | HEATING CAPACITY | MOTOR | WIDTH | VOLTAGE | FEATURES/ MINOR SERIES |
|---|---|---|---|---|---|---|
| 987MA | 42 | 060 | V | 17 | A | -A |

## ⚠ WARNING

**FIRE, EXPLOSION, ELECTRICAL SHOCK AND CARBON MONOXIDE POISONING HAZARD**

Failure to follow this warning could result in dangerous operation, personal injury, death or property damage.

Improper installation, adjustment, alteration, service, or maintenance can cause personal injury, property damage, or death. Consult a qualified installer, service agency, or your local gas supplier for information or assistance. The qualified installer or service agency must use only factory-authorized replacement parts, kits, or accessories when modifying this product.

©2012 Bryant Heating & Cooling Systems ● 7310 W. Morris St. ● Indianapolis, IN 46231

Edition Date: 06/12

**Catalog No. II987MA−05**

**Manufacturer reserves the right to discontinue, or change at any time, specifications or designs without notice and without incurring obligations.**

Replaces: II987MA−04