538FR / 619FB
HIGH WALL DUCTLESS SPLIT SYSTEM
SIZES 09 TO 18

Product Data

INDUSTRY LEADING FEATURES / BENEFITS

A PERFECT BALANCE BETWEEN BUDGET LIMITS, ENERGY SAVINGS AND COMFORT.

The 538FR/619FB series ductless split systems are a matched combination of an outdoor condensing unit and an indoor fan coil unit connected only by refrigerant tubing and wires.

The fan coil is mounted on the wall, near the ceiling. This selection of fan coils permits creative solutions to design problems such as:

- Add-ons to current space (an office or family room addition)
- Special space requirements
- When changes in the load cannot be handled by the existing system
- When adding air conditioning to spaces that are heated by hydronic or electric heat and have no ductwork
- Historical renovations or any application where preserving the look of the original structure is essential.

The ideal compliment to your ducted system when it is impractical or prohibitively expensive to use ductwork.

These compact indoor fan coil units take up very little space in the room and do not obstruct windows. The fan coils are attractively styled to blend with most room decors. Advanced system components incorporate innovative technology to provide reliable cooling performance at low sound levels.

LOW SOUND LEVELS

When noise is a concern, the ductless split systems are the answer. The indoor units are whisper quiet. There are no compressors indoors, either in the conditioned space or directly over it, and there is none of the noise usually generated by air being forced through ductwork.

When sound ordinances and proximity to neighbors demand quiet operation, the 538FR/619FB unit is the right choice. The advanced, horizontal airflow design distributes air more evenly over the coil.

SECURE OPERATION

If security is an issue, outdoor and indoor units are connected only by refrigerant piping and wiring to prevent intruders from crawling through ductwork. In addition, since 538FR/619FB units can be installed close to an outside wall, coils are protected from vandals and severe weather.

FAST INSTALLATION

This compact ductless split system is simple to install. A mounting bracket is standard with the indoor units and only wire and piping need to be run between indoor and outdoor units. These units are fast and easy to install ensuring minimal disruption to customers in the home or workplace. This makes the 538FR/619FB ductless split systems the equipment of choice, especially in retrofit situations.

SIMPLE SERVICING AND MAINTENANCE

Removing the top panel on outdoor units provides immediate access to the control compartment, providing a service technician access to check unit operation. In addition, the draw-thru design of the outdoor section means that dirt accumulates on the outside surface of the coil. Coils can be cleaned quickly from the inside using a pressure hose and detergent.

On all indoor units, service and maintenance expense is reduced due to easy-to-use cleanable filters. In addition, these high wall systems have extensive self-diagnostics to assist in troubleshooting.

BUILT-IN RELIABILITY

Ductless split system indoor and outdoor units are designed to provide years of trouble-free operation.

The high wall indoor units include protection against freeze-up and high evaporator temperatures on heat pumps.

The condensing units on heat pumps are protected by a three minute time delay before the compressor will start the over-current protection and the high temperature protection.

INDIVIDUAL ROOM COMFORT

Maximum comfort is provided because each space can be controlled individually based on usage pattern. The air sweep feature provided permits optimal room air mixing to eliminate hot and cold spots for occupant comfort. In addition, year-round comfort can be provided with heat pumps.

ECONOMICAL OPERATION

The ductless split system design allows individual room heating or cooling when required. There is no need to run large supply-air fans or chilled water pumps to handle a few spaces with unique load patterns. In addition, because air is moved only in the space required, no energy is wasted moving air through ducts.

EASY-TO-USE CONTROLS

The high wall units have microprocessor-based controls to provide the ultimate in comfort and efficiency. The user friendly wireless remote control provides the interface between user and the unit.

SMART PHONE CONTROL (OPTIONAL)

ACCESSORIES

Customizing these ductless split systems to your application is easily accomplished.

Adding a condensate pump accessory to the high wall fan coil provides installation flexibility.

AGENCY LISTINGS

All systems are listed with AHRI (Air Conditioning, Heating & Refrigeration Institute), and ETL.

MODEL NUMBER NOMENCLATURE

INDOOR UNIT

619 F E Q 009 B B GA

619 = FAN COIL UNIT

F = MODEL

VOLTAGE
E = 208–230/1/60

SYSTEM TYPE
Q = HEAT PUMP

NOMINAL CAPACITY
09 – 3/4 TON
12 – 1 TON
18 – 1–1/2 TONS

GA = **ALL MODELS**

B = **ALL**

INDOOR FAN COIL TYPE
B = HIGH WALL (GRAY COLOR)
H = HIGH WALL (WHITE COLOR)

OUTDOOR UNIT

538 F E Q 009 R B GA

538 = OUTDOOR UNIT

F = MODEL

VOLTAGE
E = 208–230/1/60

SYSTEM TYPE
Q = HEAT PUMP

Nominal Capacity
09 – 3/4 TON
12 – 1 TON
18 – 1–1/2 TONS

GA = ALL MODELS

MAXIMUM NUMBER OF FAN COIL UNITS THAT CAN BE CONNECTED TO THE OUTDOOR UNIT
B=1:1

UNIT TYPE
R = OUTDOOR UNIT

Use of the AHRI Certified TM Mark indicates a manufacturer's participation in the program For verification of certification for individual products, go to www.ahridirectory.org.

STANDARD FEATURES AND ACCESSORIES

Ease Of Installation	
Mounting Brackets	S
Low Voltage Controls	S
Comfort Features	
Microprocessor Controls	S
Automatic Horizontal Air Sweep	S
Air Direction Control	S
Auto Restart Function	S
Cold Blow Protection On Heat Pumps	S
Freeze Protection Mode On Heat Pumps	S
Turbo Mode	S
Silence Mode	S
Auto Changeover On Heat Pumps	S
46°F Heating Mode (Heating Setback)	S
I FEEL Function	S
Smart Phone Control	S
80% Heating Capacity at –22°F	S
Energy Saving Features	
Sleep Mode	S
Stop/Start Timer	S
Safety And Reliability	
3 Minute Time Delay For Compressor	S
Over Current Protection For Compressor	S
Indoor Coil Freeze Protection	S
Indoor Coil High Temp Protection in Heating Mode	S
Condenser High Temp Protection in Cooling Mode	S
Ease Of Service And Maintenance	
Cleanable Filters	S
Diagnostics	S
Liquid Line Pressure Taps	S
Application Flexibility	
Condensate Pumps	A
Crankcase Heater	S
Basepan Heater	S

Legend
S Standard
A Accessory

Accessories

ORDERING NO.	DESCRIPTION	FOR MODELS
53DS–900–––118	Condensate Pump (230v)	All Sizes
53DS–900–––008	Insulated 25' Line Set – 1/4" x 1/2"	Sizes 09, 12

INDOOR UNITS

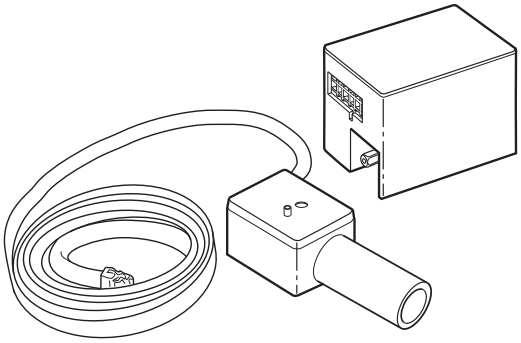

Fig. 1 – Condensate Pump Accessory

On high wall fan coils, the condensate pump has a lift capability of 12 ft. (3.6 m) on the discharge side with the pump mounted in the fan coil or 6 ft. (1.8 m) on the suction side if the pump is remote mounted. The pump is recommended when adequate drain line pitch cannot be provided, or when the condensate must move up to exit.

OUTDOOR UNITS

Crankcase Heater

Standard on all unit sizes. Heater clamps around compressor oil stump.

Factory Installed Basepan Heater

DIMENSIONS - INDOOR

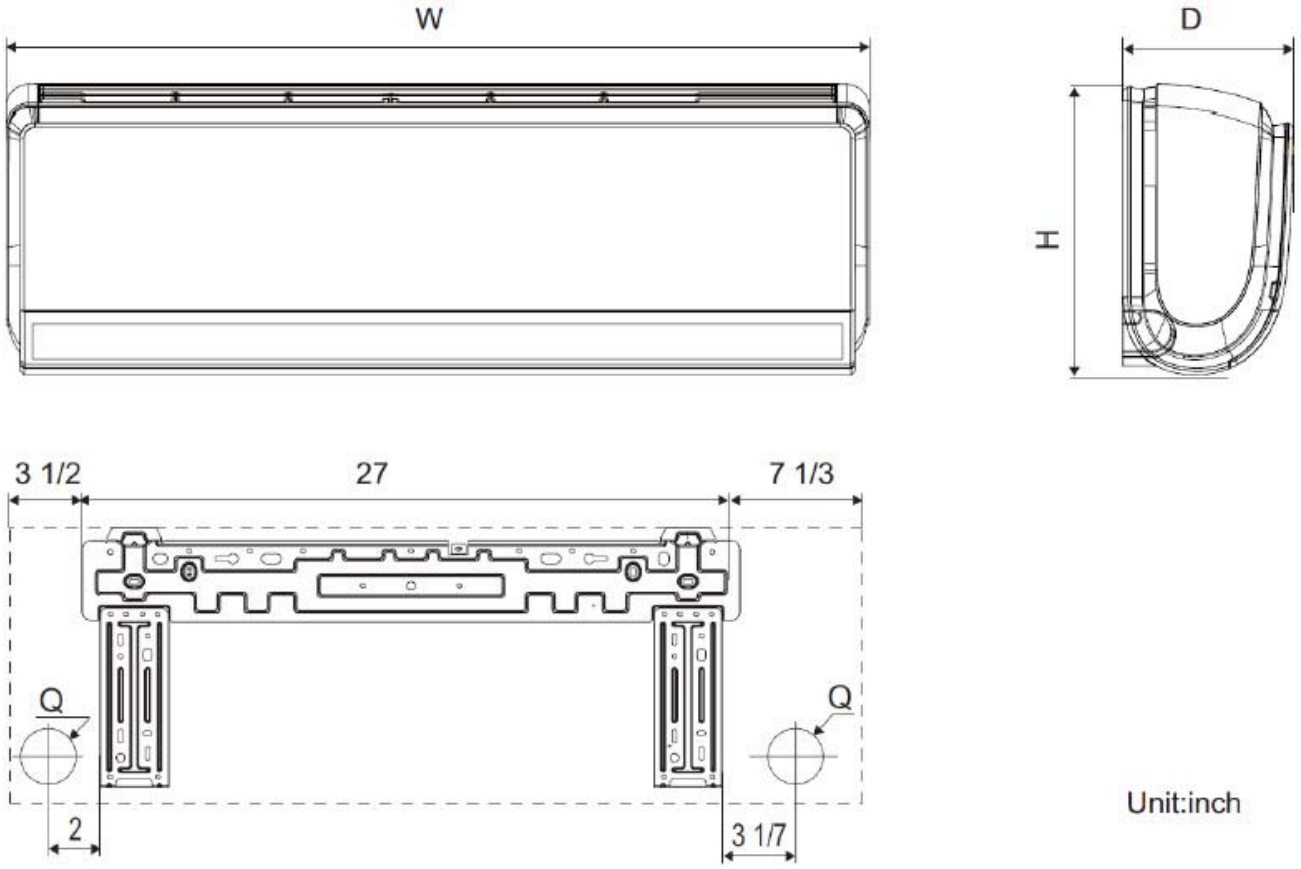

Fig. 2 – Indoor unit

SYSTEM SIZE	HEIGHT (H)		WIDTH (W)		DEPTH (D)		DIAMETER(Q)		WEIGH – NET	
	in	mm	in	mm	in	mm	in	mm	lbs	Kg
9K	12.6	320.0	37.8	960.1	8.1	205.7	2.2	55.0	30.9	14.0
12K	12.6	320.0	37.8	960.1	8.1	205.7	2.2	55.0	30.9	14.0
18K	12.6	320.0	37.8	960.1	8.1	205.7	2.8	69.9	30.9	14.0

DIMENSIONS - OUTDOOR

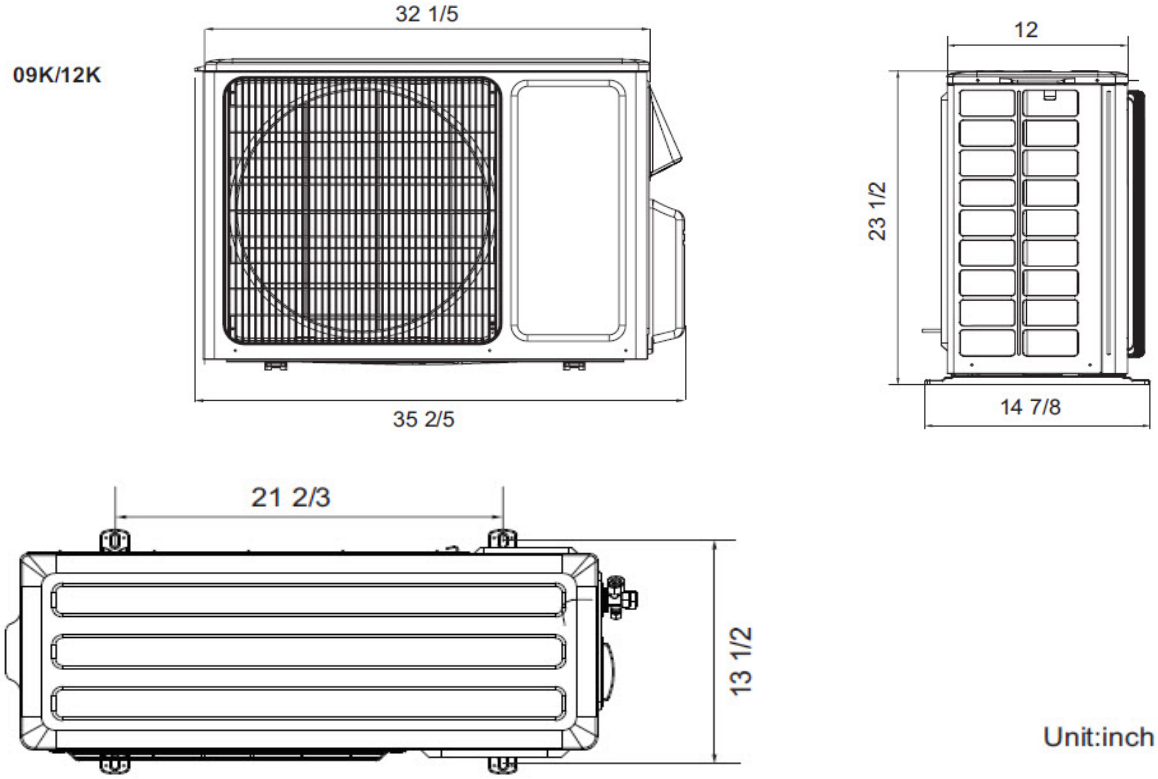

Fig. 3 – Outdoor Unit (Sizes 09-12)

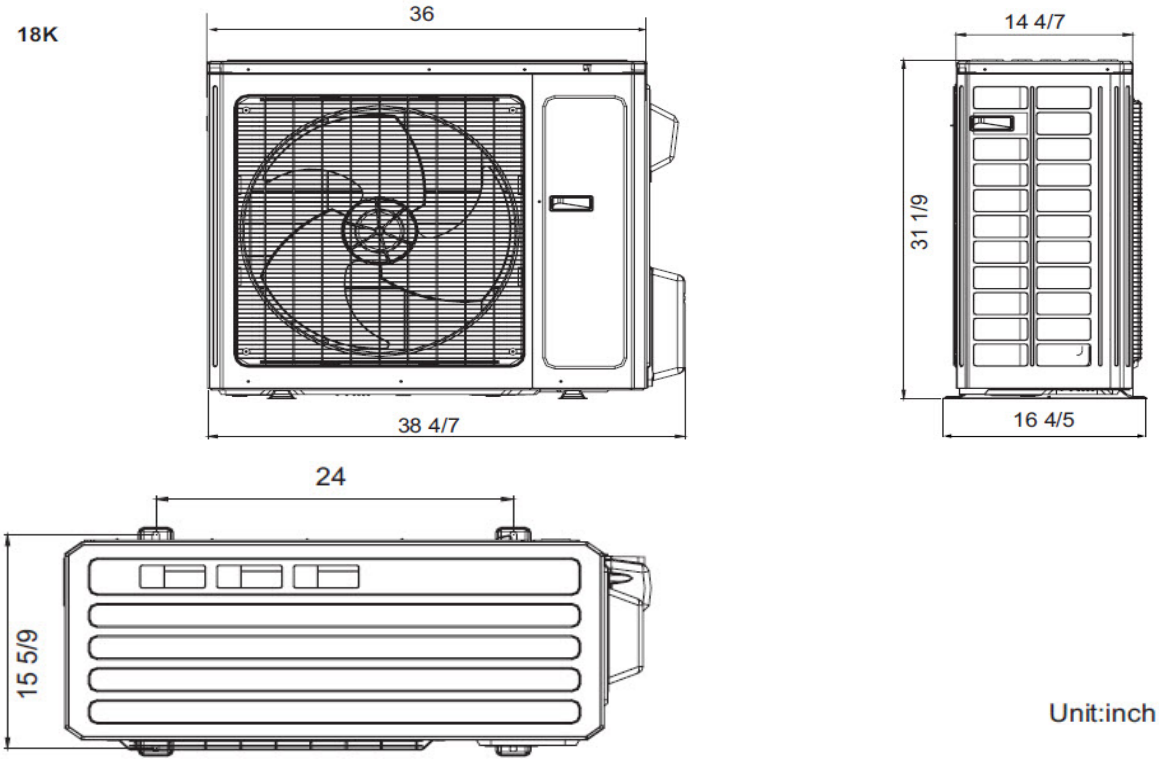

Fig. 4 – Outdoor Unit (Sizes 18)

SYSTEM SIZE	HEIGHT		WIDTH		DEPTH		WEIGHT – NET	
	in	mm	in	mm	in	mm	lbs	Kg
9K	23.5	596.9	35.4	899.2	14.9	378.5	99.2	45.0
12K	23.5	596.9	35.4	899.2	14.9	378.5	97.0	44.0
18K	31.1	789.9	38.6	980.4	16.8	426.7	141.1	64.0

CLEARANCES - INDOOR

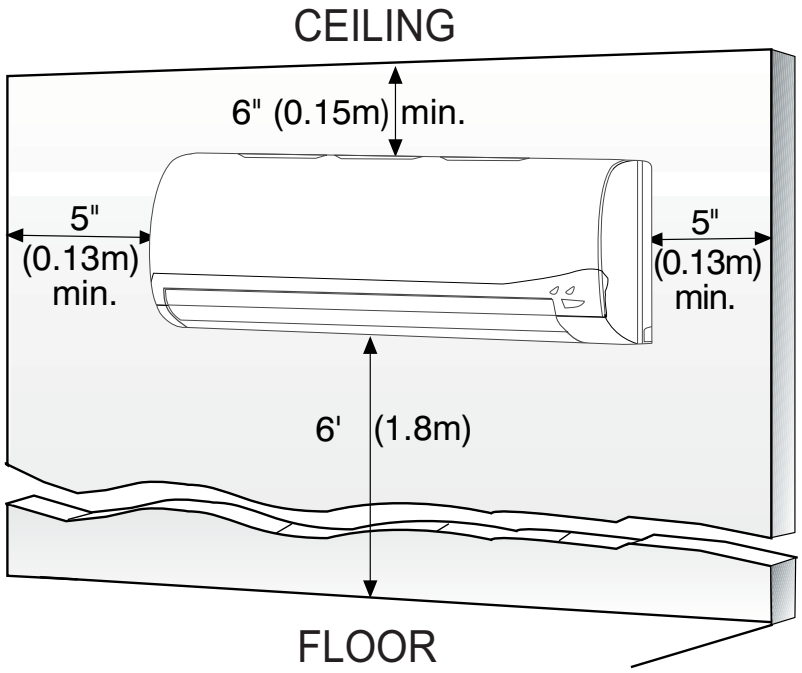

Fig. 5 – Indoor Unit Clearance

CLEARANCES - OUTDOOR

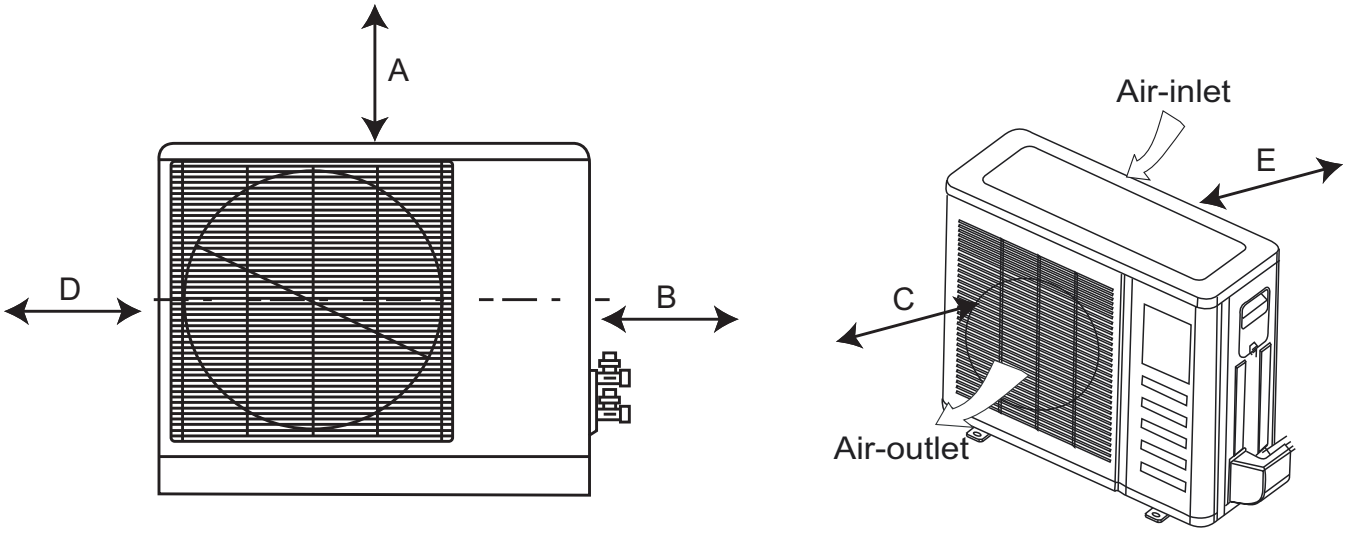

Fig. 6 – Clearances Outdoor

UNIT	MINIMUM VALUE in. (mm)
A	24 (609)
B	24 (609)
C	24 (609)
D	4 (101)
E	4 (101)

SPECIFICATIONS - HEAT PUMP UNITS (538FR/619FB SERIES)

	SIZE		9	12	18
System	Outdoor Model		538FEQ009RBGA	538FEQ012RBGA	538FEQ018RBGA
	Indoor Model (White)		619FEQ009HBGA	619FEQ012HBGA	619FEQ018HBGA
	Indoor Model (Gray)		619FEQ009BBGA	619FEQ012BBGA	619FEQ018BBGA
Performance	Cooling Rated Capacity	Btu/h	9,000	12,000	18,000
	Cooling Cap. Range Min - Max	Btu/h	1,535~ 12,966	2,900~ 15,354	4,435~ 21,496
	SEER		30.5	23.0	21.0
	EER		15.8	12.8	12.5
	Heating Rated Capacity	Btu/h	9,000	13,000	19,000
	Heating Cap. Range Min - Max	Btu/h	2,388~ 13,648	3,071~ 18,766	3,753~ 24,566
	HSPF		10.3	10.3	10.3
	COP	W/W	4.19	3.12	3.09
	Heating Capacity @ 5F	Btu/h	9,000	12,185	18,521
Controls	Wireless Remote Controller (°F/°C Convertible)		Standard		
	Wired Remote Controller (°F/°C Convertible)		Not available		
Operating Range	Cooling Outdoor DB Min - Max	°F	0–129	0–129	0–129
	Heating Outdoor DB Min - Max	°F	–22–75	–22–75	–22–75
	Cooling Indoor DB Min -Max	°F	64–95	64–95	64–95
	Heating Indoor DB Min -Max	°F	32~ 86	32~ 86	32~ 86
Piping	Total Piping Length	Ft.	82	82	82
	Piping Lift*	Ft.	33	33	33
	Pipe Connection Size - Liquid	In.	1/4”	1/4”	1/4”
	Pipe Connection Size - Suction	In.	1/2”	1/2”	5/8”
Refrigerant	Type		R410A		
	Design Pressure	PSIG	550	550	550
	Metering Device		Electronic Expansion Valve		
	Charge	Lb.	3.1	3.1	4.4
Outdoor Coil	Face Area	Sq. Ft.	4.5	4.5	7.7
	No. Rows		2.5	2.5	2
	Fins per inch		18	18	18
	Circuits		2	2	4
Indoor Coil	Face Area (sq. ft.)	Sq. Ft.	2.3	2.3	2.3
	No. Rows		2	2	2
	Fins per inch		17	17	17
	Circuits		4	4	4
Compressor	Type		Rotary	Rotary	Rotary
	Model		QXAT–B121zE070	QXAT–B096zE070	QXAT–D20zF030
	Oil Type		FV50S	68EP	RB68EP
	Oil Charge	Fl. Oz.	16.2	16.2	29.4
	Rated Current	RLA	8.5	9.5	14.5
	Locked Rotor Amp	LRA	35	40	30
Electrical	Voltage, Phase, Cycle	V/Ph/Hz	208–230/1/60	208–230/1/60	208–230/1/60
	Power Supply		Indoor unit powered from outdoor unit		
	MCA	A.	12	13	19
	MOCP - Fuse Rating	A.	15	20	30
Outdoor	Unit Width	In.	35.4	35.4	38.6
	Unit Height	In.	23.5	23.5	31.1
	Unit Depth	In.	14.9	14.9	16.8
	Net Weight	Lbs.	99.2	97.0	141.1
	Airflow	CFM	1412	1412	2354
	Sound Pressure	dB(A)	53	55	59
Indoor	Unit Width	In.	37.8	37.8	37.8
	Unit Height	In.	12.6	12.6	12.6
	Unit Depth	In.	8.1	8.1	8.1
	Net Weight (lbs.)	Lbs.	30.9	30.9	30.9
	Number of Fan Speeds		7	7	7
	Airflow (lowest to highest)	CFM	206/235/294/324/353/383/412	265/294/353/383/412/441/471	324/353/412/441/471/500/530
	Sound Pressure (lowest to highest)	dB(A)	22/24/26/30/34/38/41	23/25/27/31/35/39/42	26/28/31/35/39/43/48
	Air throw Data	Ft.	29.5	29.5	29.5

* Condensing unit above or below the indoor unit.

OPERATION CHARACTERISTIC CURVE

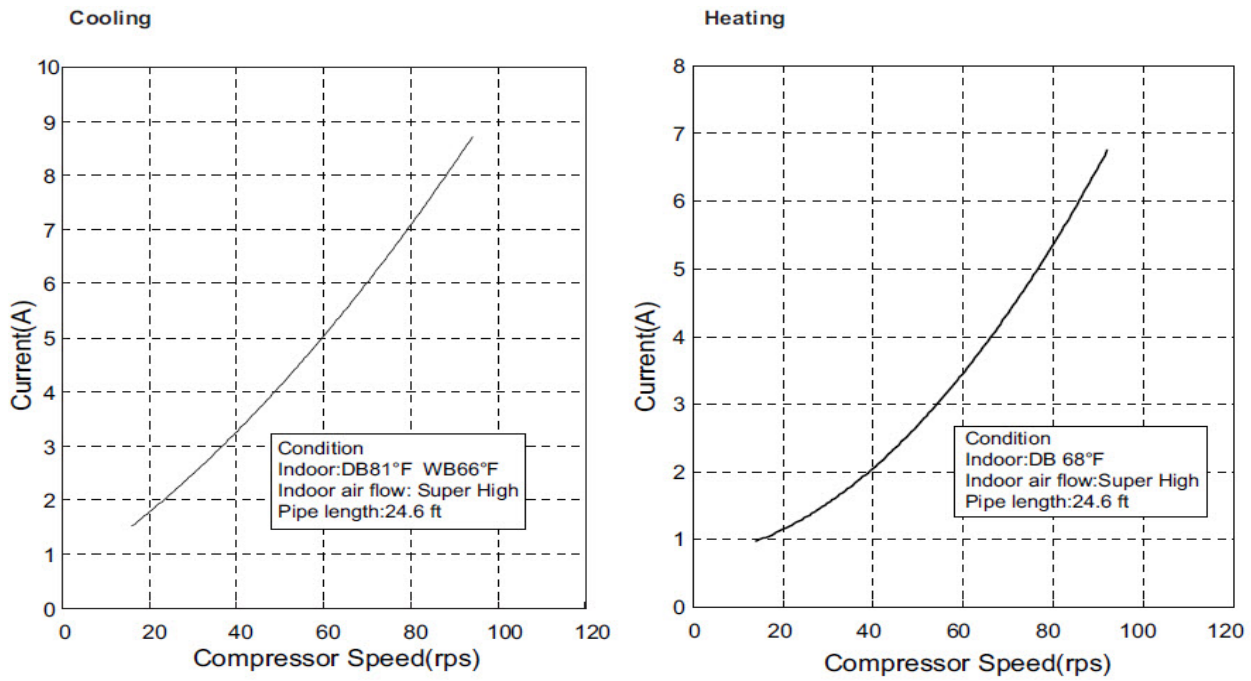

Fig. 7 – 09K/12K

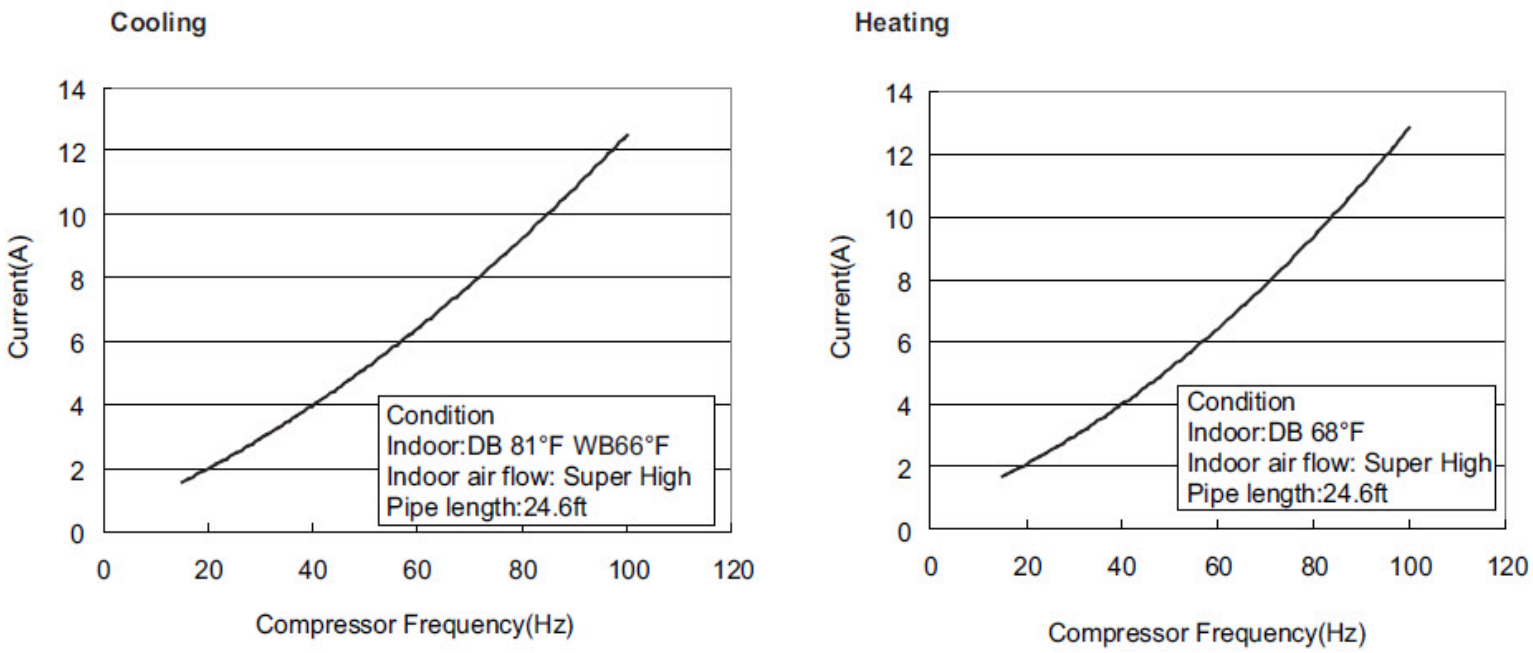

Fig. 8 – 18K

CAPACITY VARIATION RATIO ACCORDING TO TEMPERATURE

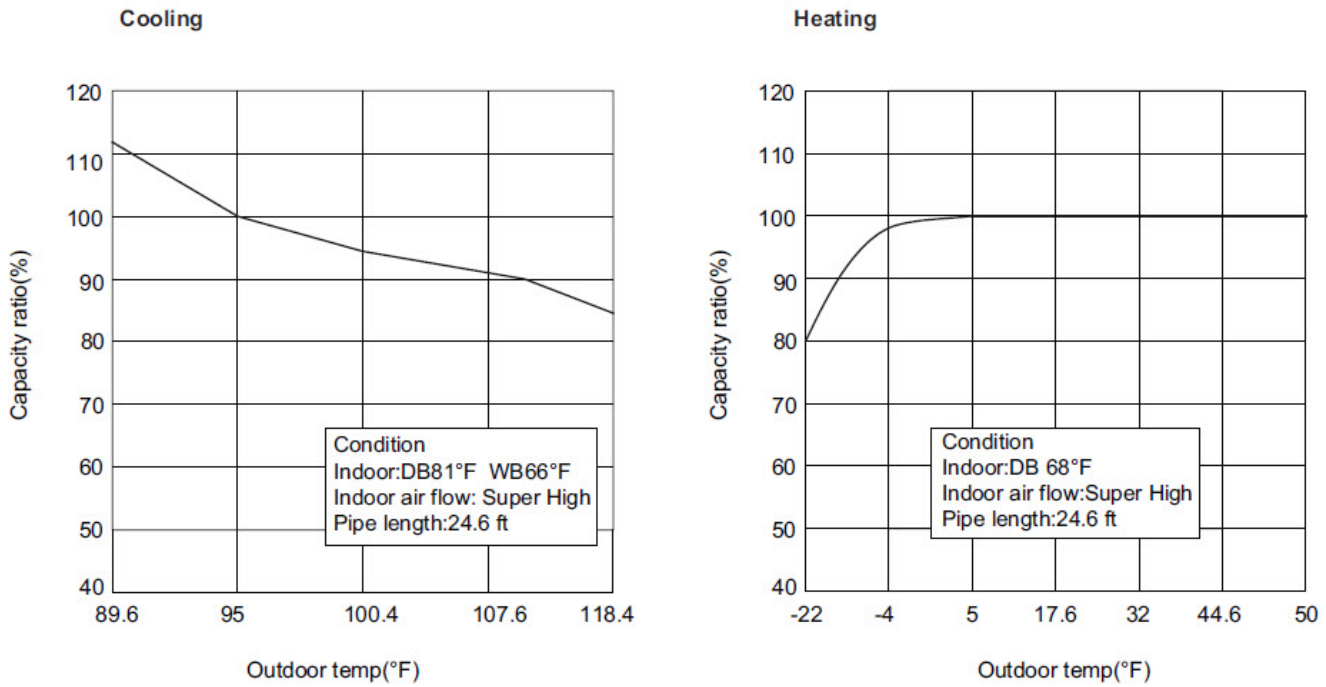

Fig. 9 – Capacity variation ratio according to temperature

SOUND CURVE

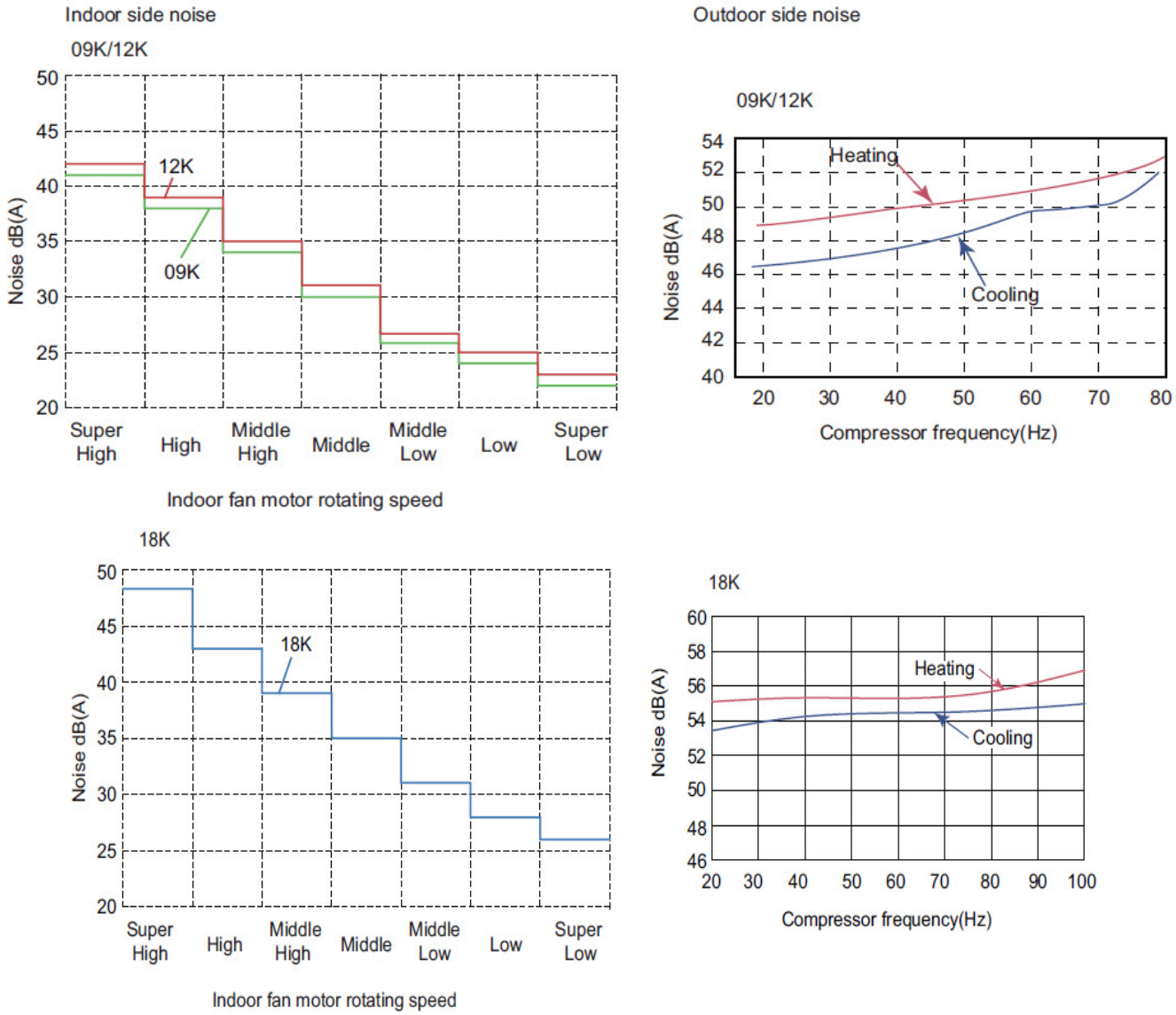

Fig. 10 – Sound curve

COOLING PERFORMANCE DATA - HEAT PUMP

MODEL	INDOOR CONDITIONS			OUTDOOR CONDITIONS (DB)													
	DB	WB		5F (−15C)	14F (−10C)	23F (−5C)	32F (0C)	41F (5C)	50F (10C)	59F (15C)	68F (20C)	77F (25C)	86F (30C)	95F (35C)	104F (40C)	113F (45C)	122F (50C)
09	65F(18C)	55F(13C)	TC	5.03	5.24	5.85	6.16	6.47	6.78	7.10	8.10	8.00	7.58	7.15	6.77	6.40	6.21
			SC	3.94	4.11	4.59	4.84	5.08	5.33	5.57	6.35	6.27	5.94	5.61	5.31	5.02	4.87
			Input	0.24	0.24	0.28	0.41	0.42	0.44	0.47	0.49	0.51	0.51	0.52	0.53	0.53	0.54
	68F(20C)	57F(14C)	TC	5.48	5.74	6.29	6.63	6.97	7.31	7.63	8.64	8.54	8.12	7.68	7.31	6.94	6.75
			SC	4.29	4.50	4.93	5.19	5.45	5.71	5.98	6.78	6.70	6.37	6.03	5.73	5.44	5.29
			Input	0.25	0.25	0.29	0.42	0.43	0.45	0.48	0.51	0.52	0.53	0.54	0.54	0.55	0.55
	73F(23C)	61F(16C)	TC	5.81	6.07	6.73	7.09	7.45	7.81	8.16	9.18	9.08	8.66	8.22	7.85	7.47	7.20
			SC	4.56	4.76	5.28	5.56	5.84	6.12	6.40	7.20	7.12	6.79	6.45	6.15	5.86	5.65
			Input	0.26	0.26	0.29	0.44	0.45	0.47	0.50	0.52	0.54	0.55	0.55	0.56	0.57	0.57
	79F(26C)	64F(18C)	TC	6.20	6.48	7.17	7.55	7.93	8.31	8.69	9.54	9.45	9.09	8.75	8.38	8.01	7.74
			SC	4.86	5.08	5.62	5.92	6.22	6.52	6.82	7.48	7.41	7.13	6.87	6.57	6.28	6.07
			Input	0.27	0.26	0.30	0.45	0.46	0.48	0.51	0.54	0.55	0.56	0.57	0.58	0.58	0.59
	80F(27C)	67F(19C)	TC	6.73	6.85	7.71	8.02	8.33	8.64	8.94	9.81	9.72	9.45	9.00	8.77	8.39	8.10
			SC	5.28	5.37	6.05	6.29	6.53	6.77	7.01	7.69	7.62	7.41	7.06	6.88	6.58	6.35
			Input	0.27	0.27	0.31	0.46	0.48	0.50	0.53	0.54	0.55	0.56	0.57	0.58	0.60	0.61
	82F(28C)	68F(20C)	TC	6.55	6.82	7.74	8.17	8.60	9.03	9.46	10.23	10.10	9.83	9.33	9.15	8.78	8.48
			SC	5.08	5.29	6.01	6.35	6.69	7.03	7.35	7.96	7.85	7.64	7.41	7.11	6.82	6.58
			Input	0.29	0.28	0.33	0.48	0.49	0.51	0.55	0.58	0.59	0.60	0.61	0.62	0.63	0.63
	86F(30C)	72F(22C)	TC	6.85	7.12	8.04	8.47	8.90	9.33	9.76	10.53	10.40	10.13	9.83	9.45	9.08	8.78
			SC	5.38	5.59	6.31	6.65	6.99	7.33	7.65	8.26	8.15	7.94	7.71	7.41	7.12	6.88
			Input	0.29	0.29	0.34	0.49	0.51	0.53	0.57	0.59	0.61	0.62	0.63	0.64	0.64	0.65
	90F(32C)	75F(24C)	TC	7.37	7.72	8.48	8.93	9.38	9.83	10.29	11.25	11.16	10.82	10.36	9.99	9.61	9.27
			SC	5.78	6.05	6.65	7.01	7.36	7.72	8.07	8.82	8.75	8.48	8.13	7.83	7.54	7.27
			Input	0.31	0.31	0.36	0.51	0.53	0.55	0.59	0.61	0.63	0.65	0.65	0.66	0.67	0.68
12	65F(18C)	55F(13C)	TC	6.69	6.99	7.80	8.22	8.87	9.32	9.46	10.80	10.66	10.11	9.53	9.03	8.53	8.28
			SC	5.24	5.48	6.12	6.44	6.95	7.30	7.42	8.47	8.36	7.93	7.48	7.08	6.69	6.49
			Input	0.41	0.41	0.41	0.47	0.70	0.71	0.75	0.80	0.83	0.86	0.87	0.89	0.90	0.91
	68F(20C)	57F(14C)	TC	7.29	7.66	8.39	8.83	9.50	9.97	10.17	11.52	11.38	10.82	10.24	9.75	9.25	9.00
			SC	5.72	6.00	6.58	6.93	7.46	7.83	7.98	9.04	8.93	8.49	8.03	7.65	7.25	7.06
			Input	0.41	0.42	0.42	0.42	0.49	0.72	0.74	0.77	0.82	0.86	0.88	0.90	0.91	0.92
	73F(23C)	61F(16C)	TC	7.73	8.09	8.97	9.45	10.15	10.64	10.88	12.24	12.11	11.54	10.96	10.46	9.96	9.60
			SC	6.06	6.34	7.04	7.41	7.96	8.34	8.53	9.60	9.50	9.06	8.59	8.20	7.81	7.53
			Input	0.42	0.43	0.43	0.43	0.50	0.73	0.75	0.78	0.83	0.87	0.89	0.91	0.92	0.93
	79F(26C)	64F(18C)	TC	8.26	8.64	9.56	10.06	10.73	11.20	11.59	12.72	12.60	12.12	11.67	11.17	10.68	10.32
			SC	6.48	6.77	7.50	7.89	8.41	8.78	9.09	9.98	9.88	9.51	9.16	8.76	8.37	8.10
			Input	0.43	0.44	0.44	0.44	0.50	0.74	0.76	0.79	0.85	0.88	0.91	0.93	0.94	0.95
	80F(27C)	67F(19C)	TC	8.95	9.13	10.28	10.69	11.29	11.71	11.92	13.08	12.96	12.60	12.00	11.69	11.19	10.80
			SC	7.02	7.16	8.06	8.38	8.85	9.18	9.34	10.26	10.17	9.88	9.41	9.17	8.78	8.47
			Input	0.44	0.45	0.45	0.45	0.52	0.76	0.78	0.82	0.87	0.91	0.94	0.96	0.97	0.98
	82F(28C)	68F(20C)	TC	8.85	9.20	10.42	10.99	11.68	12.15	12.71	13.74	13.56	13.20	12.80	12.30	11.80	11.40
			SC	6.88	7.15	8.11	8.56	9.10	9.47	9.90	10.71	10.57	10.29	9.98	9.58	9.19	8.89
			Input	0.45	0.46	0.46	0.46	0.53	0.77	0.79	0.83	0.89	0.93	0.95	0.97	0.99	1.00
	86F(30C)	72F(22C)	TC	9.15	9.50	10.72	11.30	11.98	12.45	13.01	14.04	13.86	13.50	13.10	12.60	12.10	11.70
			SC	7.18	7.45	8.41	8.86	9.40	9.77	10.20	11.01	10.87	10.59	10.28	9.88	9.49	9.18
			Input	0.46	0.47	0.47	0.47	0.54	0.79	0.81	0.85	0.91	0.95	0.98	0.99	1.01	1.02
	90F(32C)	75F(24C)	TC	9.82	10.29	11.31	11.91	12.68	13.23	13.72	15.00	14.88	14.42	13.81	13.32	12.82	12.36
			SC	7.70	8.07	8.87	9.34	9.95	10.38	10.76	11.77	11.67	11.31	10.83	10.44	10.05	9.70
			Input	0.47	0.48	0.48	0.48	0.55	0.81	0.84	0.88	0.94	0.98	1.01	1.02	1.04	1.05
18	65F(18C)	55F(13C)	TC	9.98	10.48	11.71	12.33	12.95	13.58	14.20	16.20	15.99	15.16	14.30	13.55	12.80	12.42
			SC	7.82	8.22	9.18	9.68	10.17	10.66	11.13	12.71	12.54	11.89	11.21	10.62	10.04	9.74
			Input	0.59	0.61	0.61	0.61	0.70	1.03	1.06	1.11	1.19	1.24	1.28	1.30	1.32	1.36
	68F(20C)	57F(14C)	TC	10.90	11.48	12.58	13.25	13.92	14.59	15.26	17.28	17.08	16.24	15.37	14.62	13.87	13.50
			SC	8.55	9.01	9.87	10.40	10.92	11.45	11.97	13.55	13.39	12.73	12.05	11.47	10.88	10.59
			Input	0.61	0.63	0.63	0.63	0.72	1.07	1.09	1.14	1.22	1.28	1.32	1.33	1.36	1.40
	73F(23C)	61F(16C)	TC	11.54	12.13	13.46	14.18	14.89	15.61	16.32	18.36	18.16	17.32	16.44	15.69	14.94	14.40
			SC	9.05	9.51	10.56	11.12	11.68	12.24	12.80	14.40	14.25	13.58	12.89	12.31	11.72	11.29
			Input	0.63	0.65	0.65	0.65	0.74	1.10	1.13	1.18	1.26	1.32	1.35	1.38	1.40	1.44
	79F(26C)	64F(18C)	TC	12.37	12.95	14.33	15.09	15.80	16.50	17.38	19.08	18.90	18.18	17.51	16.76	16.01	15.48
			SC	9.72	10.16	11.24	11.83	12.43	13.03	13.63	14.96	14.82	14.26	13.74	13.15	12.56	12.14
			Input	0.65	0.67	0.67	0.67	0.77	1.13	1.17	1.21	1.30	1.35	1.40	1.42	1.44	1.49
	80F(27C)	67F(19C)	TC	13.23	13.69	15.42	16.03	16.65	17.26	17.87	19.62	19.44	18.90	18.00	17.53	16.79	16.20
			SC	10.38	10.74	12.09	12.57	13.05	13.53	14.01	15.39	15.25	14.82	14.12	13.75	13.16	12.71
			Input	0.67	0.69	0.69	0.69	0.79	1.17	1.20	1.25	1.34	1.40	1.44	1.46	1.49	1.54
	82F(28C)	68F(20C)	TC	13.63	14.24	16.09	16.95	17.88	18.74	19.51	21.06	20.79	20.25	19.65	18.90	18.16	17.55
			SC	10.68	11.17	12.62	13.29	13.96	14.63	15.30	16.52	16.31	15.88	15.41	14.82	14.24	13.77
			Input	0.68	0.70	0.70	0.70	0.80	1.19	1.23	1.28	1.37	1.43	1.48	1.50	1.53	1.57
	86F(30C)	72F(22C)	TC	13.61	14.24	16.09	16.95	17.80	18.66	19.51	21.06	20.79	20.25	19.65	18.90	18.16	17.55
			SC	10.68	11.17	12.62	13.29	13.96	14.63	15.30	16.52	16.31	15.88	15.41	14.82	14.24	13.77
			Input	0.70	0.72	0.72	0.72	0.83	1.21	1.25	1.30	1.39	1.45	1.50	1.52	1.55	1.59
	90F(32C)	75F(24C)	TC	14.50	15.43	16.96	17.86	18.77	19.67	20.57	22.50	22.32	21.63	20.72	19.97	19.22	18.54
			SC	11.37	12.10	13.30	14.01	14.72	15.43	16.14	17.65	17.50	16.96	16.25	15.66	15.08	14.54
			Input	0.70	0.74	0.74	0.73	0.85	1.25	1.29	1.34	1.44	1.50	1.54	1.57	1.59	1.64

LEGEND
DB – DRY BULB
WB – WET BULB
TC –TOTAL NET COOLING CAPACITY (1000 Btu/hour)
SC – SENSIBLE CAPACITY (1000 Btu/hour)
INPUT – TOTAL POWER (Kw)

HEATING PERFORMANCE DATA - HEAT PUMP

Model	INDOOR CONDITIONS			OUTDOOR CONDITIONS (DB)																	
	DB	WB		-22F (-30 C)	-4F (-20 C)	0F (-17.8C)	6F (-14.4C)	10F (-12.2C)	16F (-8.9C)	19F (-7.2C)	24F (-4.4C)	32F (0C)	41F (5C)	43F (6.1C)	47F (8.3C)	53F (11.7C)	59F (15C)	64F (17.8C)	70F (21.1C)	75F (23.9C)	78F (25.6C)
09	65F(18C)	55F(13C)	TC	8.33	8.71	9.28	9.47	9.47	9.47	9.47	9.47	9.47	9.47	9.47	9.47	9.57	9.78	9.99	10.18	10.32	10.42
			Input	0.83	0.81	0.79	0.77	0.75	0.73	0.71	0.69	0.67	0.65	0.63	0.61	0.61	0.62	0.63	0.64	0.65	0.66
			COP	2.94	3.15	3.44	3.60	3.70	3.80	3.91	4.02	4.14	4.27	4.40	4.57	4.57	4.63	4.64	4.65	4.65	4.65
	68F(20C)	57F(14C)	TC	8.08	8.45	9.00	9.18	9.18	9.18	9.18	9.18	9.18	9.18	9.18	9.18	9.28	9.49	9.69	9.87	10.01	10.10
			Input	0.85	0.83	0.81	0.79	0.77	0.75	0.73	0.71	0.69	0.67	0.65	0.63	0.64	0.64	0.65	0.66	0.67	0.68
			COP	2.79	2.98	3.26	3.41	3.49	3.59	3.69	3.79	3.90	4.02	4.14	4.27	4.27	4.33	4.34	4.35	4.35	4.35
	73F(23C)	61F(16C)	TC	8.00	8.36	8.91	9.09	9.09	9.09	9.09	9.09	9.09	9.09	9.09	9.09	9.18	9.39	9.59	9.77	9.91	10.00
			Input	0.86	0.84	0.82	0.80	0.78	0.76	0.74	0.72	0.70	0.68	0.66	0.64	0.65	0.66	0.67	0.68	0.69	0.70
			COP	2.73	2.92	3.18	3.33	3.41	3.50	3.60	3.70	3.80	3.92	4.04	4.14	4.14	4.16	4.18	4.19	4.22	4.20
	79F(26C)	64F(18C)	TC	7.92	8.28	8.82	9.00	9.00	9.00	9.00	9.00	9.00	9.00	9.00	9.00	9.09	9.30	9.50	9.68	9.81	9.90
			Input	0.93	0.91	0.89	0.87	0.85	0.83	0.81	0.79	0.77	0.75	0.73	0.71	0.69	0.67	0.68	0.69	0.70	0.71
			COP	2.50	2.67	2.90	3.03	3.10	3.18	3.26	3.34	3.42	3.52	3.61	3.71	3.86	4.07	4.09	4.11	4.13	4.09
	80F(27C)	67F(19C)	TC	7.86	8.22	8.75	8.93	8.93	8.93	8.93	8.93	8.93	8.93	8.93	8.93	9.02	9.23	9.42	9.60	9.73	9.82
			Input	0.94	0.92	0.90	0.88	0.86	0.84	0.82	0.80	0.78	0.76	0.74	0.72	0.70	0.68	0.69	0.70	0.71	0.71
			COP	2.45	2.62	2.85	2.97	3.04	3.12	3.19	3.27	3.36	3.44	3.54	3.63	3.78	3.97	4.00	4.02	4.02	4.05
	82F(28C)	68F(20C)	TC	7.70	8.05	8.58	8.75	8.75	8.75	8.75	8.75	8.75	8.75	8.75	8.75	8.84	9.04	9.23	9.41	9.54	9.63
			Input	0.95	0.93	0.91	0.89	0.87	0.85	0.83	0.81	0.79	0.77	0.75	0.73	0.71	0.68	0.69	0.70	0.71	0.72
			COP	2.38	2.54	2.76	2.88	2.95	3.02	3.09	3.17	3.25	3.33	3.42	3.51	3.65	3.91	3.92	3.94	3.93	3.93
	86F(30C)	72F(22C)	TC	7.52	7.86	8.37	8.54	8.54	8.54	8.54	8.54	8.54	8.54	8.54	8.54	8.63	8.83	9.01	9.19	9.31	9.40
			Input	0.99	0.97	0.95	0.93	0.91	0.89	0.87	0.85	0.83	0.81	0.79	0.77	0.75	0.73	0.71	0.72	0.73	0.74
			COP	2.23	2.37	2.58	2.69	2.75	2.81	2.88	2.95	3.02	3.09	3.17	3.25	3.37	3.54	3.72	3.74	3.74	3.72
12	65F(18C)	55F(13C)	TC	10.10	11.11	11.99	12.63	12.63	12.63	12.63	12.63	12.63	12.63	12.63	12.63	12.75	13.04	13.32	13.58	13.76	13.89
			Input	1.43	1.41	1.39	1.37	1.35	1.33	1.31	1.29	1.27	1.25	1.23	1.21	1.23	1.25	1.25	1.27	1.29	1.31
			COP	2.07	2.31	2.53	2.70	2.74	2.78	2.82	2.87	2.91	2.96	3.01	3.06	3.04	3.06	3.12	3.13	3.13	3.11
	68F(20C)	57F(14C)	TC	9.80	10.77	11.63	13.00	13.00	13.00	13.00	13.00	13.00	13.00	13.00	13.00	13.00	13.00	13.00	13.16	13.35	13.47
			Input	1.44	1.42	1.40	1.38	1.36	1.34	1.32	1.30	1.28	1.26	1.24	1.22	1.23	1.24	1.26	1.28	1.30	1.32
			COP	1.99	2.22	2.43	2.76	2.80	2.84	2.89	2.93	2.98	3.02	3.07	3.12	3.10	3.07	3.02	3.01	3.01	2.99
	73F(23C)	61F(16C)	TC	9.70	10.67	11.51	12.12	12.12	12.12	12.12	12.12	12.12	12.12	12.12	12.12	12.24	12.52	12.79	13.03	13.21	13.33
			Input	1.46	1.44	1.42	1.40	1.38	1.36	1.34	1.32	1.30	1.28	1.26	1.24	1.25	1.26	1.27	1.29	1.31	1.33
			COP	1.95	2.17	2.37	2.54	2.57	2.61	2.65	2.69	2.73	2.77	2.82	2.86	2.87	2.91	2.95	2.96	2.95	2.94
	79F(26C)	64F(18C)	TC	9.60	10.56	11.40	12.00	12.00	12.00	12.00	12.00	12.00	12.00	12.00	12.00	12.12	12.40	12.66	12.90	13.08	13.20
			Input	1.47	1.45	1.43	1.41	1.39	1.37	1.35	1.33	1.31	1.29	1.27	1.25	1.26	1.28	1.29	1.31	1.33	1.35
			COP	1.91	2.13	2.34	2.49	2.53	2.57	2.60	2.64	2.68	2.73	2.77	2.81	2.82	2.84	2.88	2.89	2.88	2.86
	80F(27C)	67F(19C)	TC	9.53	10.48	11.31	11.91	11.91	11.91	11.91	11.91	11.91	11.91	11.91	11.91	12.03	12.30	12.56	12.80	12.98	13.10
			Input	1.48	1.46	1.44	1.42	1.40	1.38	1.36	1.34	1.32	1.30	1.28	1.26	1.28	1.29	1.31	1.33	1.35	1.37
			COP	1.89	2.10	2.30	2.46	2.49	2.53	2.57	2.60	2.64	2.68	2.73	2.77	2.75	2.79	2.81	2.82	2.82	2.80
	82F(28C)	68F(20C)	TC	9.34	10.27	11.09	11.67	11.67	11.67	11.67	11.67	11.67	11.67	11.67	11.67	11.79	12.05	12.31	12.54	12.72	12.84
			Input	1.50	1.48	1.46	1.44	1.42	1.40	1.38	1.36	1.34	1.32	1.30	1.28	1.29	1.31	1.33	1.35	1.37	1.39
			COP	1.82	2.03	2.23	2.37	2.41	2.44	2.48	2.51	2.55	2.59	2.63	2.67	2.68	2.70	2.71	2.72	2.72	2.71
	86F(30C)	72F(22C)	TC	9.11	10.03	10.82	11.39	11.39	11.39	11.39	11.39	11.39	11.39	11.39	11.39	11.51	11.77	12.02	12.25	12.42	12.53
			Input	1.52	1.50	1.48	1.46	1.44	1.42	1.40	1.38	1.36	1.34	1.32	1.30	1.31	1.33	1.35	1.37	1.39	1.41
			COP	1.76	1.96	2.14	2.29	2.32	2.35	2.38	2.42	2.45	2.49	2.53	2.57	2.57	2.59	2.61	2.62	2.62	2.60
18	65F(18C)	55F(13C)	TC	15.99	17.79	19.19	19.99	19.99	19.99	19.99	19.99	19.99	19.99	19.99	19.99	20.19	20.65	21.09	21.49	21.79	21.99
			Input	2.20	2.10	1.96	1.94	1.92	1.90	1.88	1.86	1.84	1.82	1.80	1.78	1.80	1.81	1.82	1.84	1.86	1.87
			COP	2.13	2.48	2.87	3.02	3.05	3.08	3.12	3.15	3.18	3.22	3.25	3.29	3.29	3.34	3.40	3.42	3.43	3.45
	68F(20C)	57F(14C)	TC	15.51	17.25	18.61	19.39	19.39	19.39	19.39	19.39	19.39	19.39	19.39	19.39	19.58	20.03	20.45	20.84	21.13	21.33
			Input	2.15	2.08	1.98	1.96	1.94	1.92	1.90	1.88	1.86	1.84	1.82	1.80	1.81	1.82	1.83	1.86	1.88	1.90
			COP	2.11	2.43	2.75	2.90	2.93	2.96	2.99	3.02	3.05	3.09	3.12	3.16	3.17	3.22	3.27	3.28	3.29	3.29
	73F(23C)	61F(16C)	TC	15.35	17.08	18.42	19.19	19.19	19.19	19.19	19.19	19.19	19.19	19.19	19.19	19.38	19.83	20.25	20.63	20.92	21.11
			Input	2.12	2.09	2.00	1.98	1.96	1.94	1.92	1.90	1.88	1.86	1.84	1.82	1.83	1.85	1.87	1.88	1.90	1.92
			COP	2.12	2.39	2.70	2.84	2.87	2.90	2.93	2.96	2.99	3.02	3.06	3.09	3.10	3.14	3.17	3.21	3.23	3.22
	79F(26C)	64F(18C)	TC	15.20	16.91	18.24	19.00	19.00	19.00	19.00	19.00	19.00	19.00	19.00	19.00	19.19	19.63	20.05	20.43	20.71	20.90
			Input	2.14	2.10	2.02	2.00	1.98	1.96	1.94	1.92	1.90	1.88	1.86	1.84	1.85	1.87	1.88	1.90	1.92	1.94
			COP	2.08	2.36	2.65	2.78	2.81	2.84	2.87	2.90	2.93	2.96	2.99	3.03	3.04	3.08	3.12	3.15	3.16	3.16
	80F(27C)	67F(19C)	TC	15.09	16.78	18.10	18.86	18.86	18.86	18.86	18.86	18.86	18.86	18.86	18.86	19.04	19.48	19.89	20.27	20.55	20.74
			Input	2.10	2.06	2.04	2.02	2.00	1.98	1.96	1.94	1.92	1.90	1.88	1.86	1.87	1.88	1.90	1.92	1.94	1.96
			COP	2.11	2.39	2.60	2.74	2.76	2.79	2.82	2.85	2.88	2.91	2.94	2.97	2.98	3.04	3.07	3.09	3.10	3.10
	82F(28C)	68F(20C)	TC	14.78	16.44	17.74	18.48	18.48	18.48	18.48	18.48	18.48	18.48	18.48	18.48	18.66	19.08	19.49	19.86	20.14	20.32
			Input	2.12	2.08	2.06	2.04	2.02	2.00	1.98	1.96	1.94	1.92	1.90	1.88	1.90	1.92	1.94	1.96	1.97	1.98
			COP	2.04	2.32	2.52	2.65	2.68	2.71	2.73	2.76	2.79	2.82	2.85	2.88	2.88	2.91	2.94	2.97	3.00	3.01
	86F(30C)	72F(22C)	TC	14.43	16.05	17.32	18.04	18.04	18.04	18.04	18.04	18.04	18.04	18.04	18.04	18.22	18.63	19.03	19.39	19.66	19.84
			Input	2.11	2.10	2.08	2.06	2.04	2.02	2.00	1.98	1.96	1.94	1.92	1.90	1.91	1.93	1.95	1.97	1.99	2.00
			COP	2.00	2.24	2.44	2.57	2.59	2.62	2.64	2.67	2.70	2.72	2.75	2.78	2.79	2.83	2.86	2.88	2.89	2.91

LEGEND
DB – DRY BULB
WB – WET BULB
TH – TOTAL NET HEATING CAPACITY (1000 Btu/hour)
SC – SENSIBLE CAPACITY (1000 Btu/hour)
INPUT – TOTAL POWER (kW)

APPLICATION DATA

UNIT SELECTION

Select equipment to either match or be slightly less than anticipated peak load. This provides better humidity control, fewer unit cycles, and less part-load operation.

For units used in spaces with high sensible loads, base equipment selection on unit sensible load, not on total anticipated load. Adjust for anticipated room wet bulb temperature to avoid undersizing equipment.

UNIT MOUNTING (INDOOR)

Refer to unit Installation Instructions for further details.

Unit leveling - For reliable operation, units should be level in all planes.

Clearance - Provide adequate clearance for airflow as shown in Fig. 6.

Unit location - Select a location which will provide the best air circulation for the room.

These units should be positioned as high as possible on the wall for best air circulation. The unit return and discharge should not be obstructed by furniture, curtains, or anything which may cause unit short cycling or air recirculation. Place the unit in the middle of the selected wall (if possible). Use an outside wall, if available, to make piping easier, and place the unit so it faces the normal location of room occupants.

UNIT MOUNTING (OUTDOOR)

Refer to unit Installation Instructions for further details.

Unit leveling - For reliable operation, units should be level in all planes.

Clearance - Minimum clearance, as shown in Fig. 6, must be provided for airflow. The condensing units are designed for free-blow application. Air inlets and outlets should not be restricted.

Unit location - A location which is convenient to installation and not exposed to strong wind.

A location which can bear the weight of outdoor unit and where the outdoor unit can be mounted in a level position.

Do not install the indoor or outdoor units in a location with special environmental conditions. For those applications, contact your ductless representative.

MOUNTING TEMPLATE

Refer to unit Installation Instructions for further details.

The fan coil units are furnished with mounting to mark the location of the wiring, and refrigeration line hole locations.

SUPPORT

Adequate support must be provided to support the weight of all fan coils. Refer to the Physical Data section for fan coil weights, and the base unit dimensional drawings for the location of mounting brackets.

SYSTEM OPERATING CONDITIONS

OPERATING RANGE Min / Max ° F (° C)		
	COOLING	HEATING
Outdoor DB	0 / 129 (–18 / 54)	–22 / 75 (–30 / 24)
Indoor DB	64 / 95 (18 / 35)	32 / 86 (0 / 30)
Indoor WB	55 / 84 (13 / 29)	

NON–OPERATING TEMPERATURE RANGE Min / Max ° F (° C)	
Indoor/Outdoor DB	32 / 86 (0 / 30)

NOTE: Reference the Product Installation Instructions for more information.

METERING DEVICES

The outdoor unit has an electronic expansion valve to manage the refrigerant flow of the fan coil connected.

DRAIN CONNECTIONS

Install drains to meet local sanitation codes. If adequate gravity drainage cannot be provided, unit should be equipped with accessory condensate pump. High wall fan coil unit condensate pumps have a maximum lift of 10' (3.05 m) for 9k and 12k units and 25' (7.62 m) for 18k units.

See physical dimension tables for drain sizes.

NOTE: High wall fan coil units have internal condensate traps. A trap is not required.

Drain connections may be routed through alternate locations on most fan coils as shown in Fig. 4.

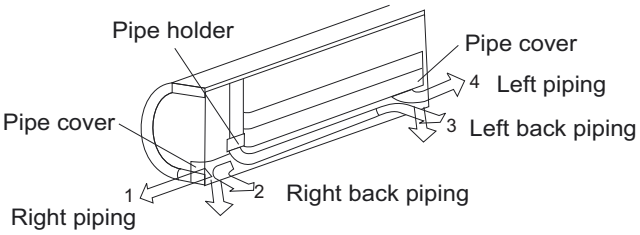

Fig. 11 – Piping Locations

⚠ CAUTION

REAR LEFT CONDENSATE DRAIN CONNECTION ON UNIT

When piping out of the rear right, a field supplied joint connection will need to be made behind the unit.

- Please ensure that the connection is made properly to avoid leaks.

REFRIGERANT LINES

General refrigerant line sizing:

1. The outdoor units are shipped with a full charge of R410A refrigerant. All charges, line sizing, and capacities are based on runs of 25 ft. (7.6 m). For runs over 25 ft. (7.6 m), consult long-line section on this page for proper charge adjustments.
2. Refrigerant lines should not be buried in the ground. If it is necessary to bury the lines, not more than 36-in (914 mm) should be buried. Provide a minimum 6-in (152 mm) vertical rise to the service valves to prevent refrigerant migration.
3. Both lines must be insulated. Use a minimum of 1/2-in. (12.7 mm) thick insulation. Closed-cell insulation is recommended in all long-line applications.
4. Special consideration should be given to isolating interconnecting tubing from the building structure. Isolate the tubing so that vibration or noise is not transmitted into the structure.

Long Line Applications

1. No change in line sizing is required.
2. Add refrigerant per table below.

ADDITIONAL CHARGE TABLE

UNIT SIZE	TOTAL LINE-LENGTH ft		ADDITIONAL CHARGE, oz/ft. ft (m)	
	Min	Max	10 – 25 (3 – 8)	>25 – 82 (8 – 25)
9	10	82	None	0.2
12				
18				

WIRING

All wires must be sized per NEC (National Electrical Code) or CEC (Canadian Electrical Code) and local codes. Use Electrical Data table MCA (minimum circuit amps) and MOCP (maximum over current protection) to correctly size the wires and the disconnect fuse or breakers respectively. Per the caution note, only stranded copper conductors with a 600 volt rating and double insulated copper wire must be used. The use of BX cable is not recommended.

Recommended Connection Method for Power and Communication Wiring - Power and Communication Wiring:

The main power is supplied to the outdoor unit. The field supplied 14/3 power/communication wiring from the outdoor unit to indoor unit consists of four (4) wires and provides the power for the indoor unit. Two wires are high voltage AC power, one is communication wiring and the other is a ground wire.

Recommended Connection Method for Power and Communication Wiring (To minimize communication wiring interference) PowerWiring:

The main power is supplied to the outdoor unit. The field supplied power wiring from the outdoor unit to indoor unit consists of three (3) wires and provides the power for the indoor unit. Two wires are high voltage AC power and one is a ground wire.
To minimize voltage drop, the factory recommended wire size is 14/2 stranded with a ground.

Communication Wiring:

A separate shielded Stranded copper conductor only, with a 600 volt rating and double insulated copper wire, must be used as the communication wire from the outdoor unit to the indoor unit. Please use a separate shielded 16GA stranded control wire.

⚠ CAUTION

EQUIPMENT DAMAGE HAZARD

Failure to follow this caution may result in equipment damage or improper operation.

- Wires should be sized based on NEC and local codes.
- Use copper conductors only with a 600 volt rating and double insulated copper wire.

⚠ CAUTION

EQUIPMENT DAMAGE HAZARD

Failure to follow this caution may result in equipment damage or improper operation.

- Be sure to comply with local codes while running wire from indoor unit to outdoor unit.
- Every wire must be connected firmly. Loose wiring may cause terminal to overheat or result in unit malfunction. A fire hazard may also exist. Therefore, be sure all wiring is tightly connected.
- No wire should be allowed to touch refrigerant tubing, compressor or any moving parts.
- Disconnecting means must be provided and shall be located within sight and readily accessible from the air conditioner.
- Connecting cable with conduit shall be routed through hole in the conduit panel.

CONTROL SYSTEM

The indoor unit is equipped with a microprocessor control to perform two functions:

1. Provide safety for the system
2. Control the system and provide optimum levels of comfort and efficiency

The main microprocessor is located on the control board of the fan coil unit (outdoor units have a microprocessor too) with thermistors located in the fan coil air inlet and on the indoor coil. Heat pump units have a thermistor on the outdoor coil. These thermistors monitor the system operation to maintain the unit within acceptable parameters and control the operating mode.

WIRELESS REMOTE CONTROL

1. A wireless remote control is supplied for system operation of all high-wall units.
2. Each battery-operated wireless (infrared) remote control may be used to control more than one unit.

Fig. 12 – Wireless remote control

AIR FLOW DATA

SYSTEM SIZE		9K (208–230 V)	12K (208–230 V)	18K (208–230 V)
Indoor (CFM)	SH	412	471	530
	H	383	441	500
	MH	353	412	471
	M	324	383	441
	ML	294	353	412
	L	235	294	353
	SL	206	265	324
Outdoor (CFM)		1412	1412	2354

AIR THROW DATA

SYSTEM SIZE		9K (208–230 V)	12K (208–230 V)	18K (208–230 V)
Approximate Air Throw ft (Airflow SH)	Cooling	29.52ft (9m)	29.52ft (9m)	29.52ft (9m)
	Heating	22.96ft (7m)	22.96ft (7m)	22.96ft (7m)

SOUND PRESSURE

SYSTEM SIZE			9K (208–230 V)	12K (208–230 V)	18K (208–230 V)
Cooling operation Indoor Sound Pressure HP cooling mode	SH	dBa	41	42	48
	H	dBa	38	39	43
	MH	dBa	34	35	39
	M	dBa	30	31	35
	ML	dBa	26	27	31
	L	dBa	24	25	28
	SL	dBa	22	23	26
Outdoor sound pressure level	H	dBa	53	55	59

ELECTRICAL DATA

UNIT SIZE	OPERVOLTAGE- MAX / MIN*	COMPRESSOR			OUTDOOR FAN				INDOOR FAN				MCA	MAX FUSE CB AMP
		V/PH/HZ	RLA	LRA	V/PH/HZ	FLA	HP	W	V/PH/HZ	FLA	HP	W		
9K	253 / 187	208–230/1/60	8.5	35	208–230/1/60	0.37	0.04	30	208–230/1/60	0.1	0.027	20	12	15
12K			9.5	40		0.37	0.04	30		0.1	0.027	20	13	20
18K			14.5	30		0.48	0.12	90		0.1	0.027	20	19	30

*Permissible limits of the voltage range at which the unit will operate satisfactorily

LEGEND

FLA – Full Load Amps
LRA – Locked Rotor Amps
MCA – Minimum Circuit Amps
RLA – Rated Load Amps

MOTOR AND FAN SPECIFICATIONS

SYSTEM SIZE			9K (208–230 V)	12K (208–230 V)	18K (208–230 V)
Indoor fan	material		AS–GF30	AS–GF30	AS–GF30
	Type		Cross–flow	Cross–flow	Cross–flow
	Diameter	inch	4.2	4.2	4.2
	Length	inch	27.5	27.5	27.5
Outdoor fan	material		AS–GF20	AS–GF20	AS–GF20
	Type		Axial–flow	Axial–flow	Axial–flow
	Diameter	inch	17.25	17.25	17.25
	Height	inch	4.5	4.5	4.5
Indoor fan motor	Model		FN20V–ZL	FN20V–ZL	FN20V–ZL
	Type		DC	DC	DC
	Phase		3	3	3
	FLA		0.1	0.1	0.1
	Insulation class		Class E	Class E	Class E
	Safe class		IP20	IP20	IP20
	Output	W	20	20	20
	Rated current	Amps	0.1	0.1	0.1
	Rated HP	HP	0.0268	0.0268	0.0268
	Rated RPM	rev/min	1250	1250	1250
Outdoor fan motor	Model		FW30J–ZL	FW30J–ZL	LW92K–ZL
	Type		DC	DC	DC
	Phase		3	3	3
	FLA		0.365	0.365	0.486
	Insulation class		Class E	Class E	Class E
	Safe class		IP24	IP24	IP24
	Output	W	30	30	90
	Rated current	Amps	0.365	0.365	0.486
	Rated HP	HP	0.0402	0.0402	0.12069
	Rated RPM	rev/min	900	900	900

WIRING DIAGRAMS

Symbol	Symbol Color	Symbol	Symbol Color	Symbol	Name
WH	White	GN	Green	CAP	Jumper Cap
YE	Yellow	BN	Brown	COMP	Compressor
RD	Red	BU	Blue	⏚	Grounding wire
YEGN	Yellow/Green	BK	Black	/	/
VT	Violet	OG	Orange	/	/

NOTE: Jumper cap is used to determine fan speed and the swing angle of horizontal louver of this model.

INDOOR UNIT

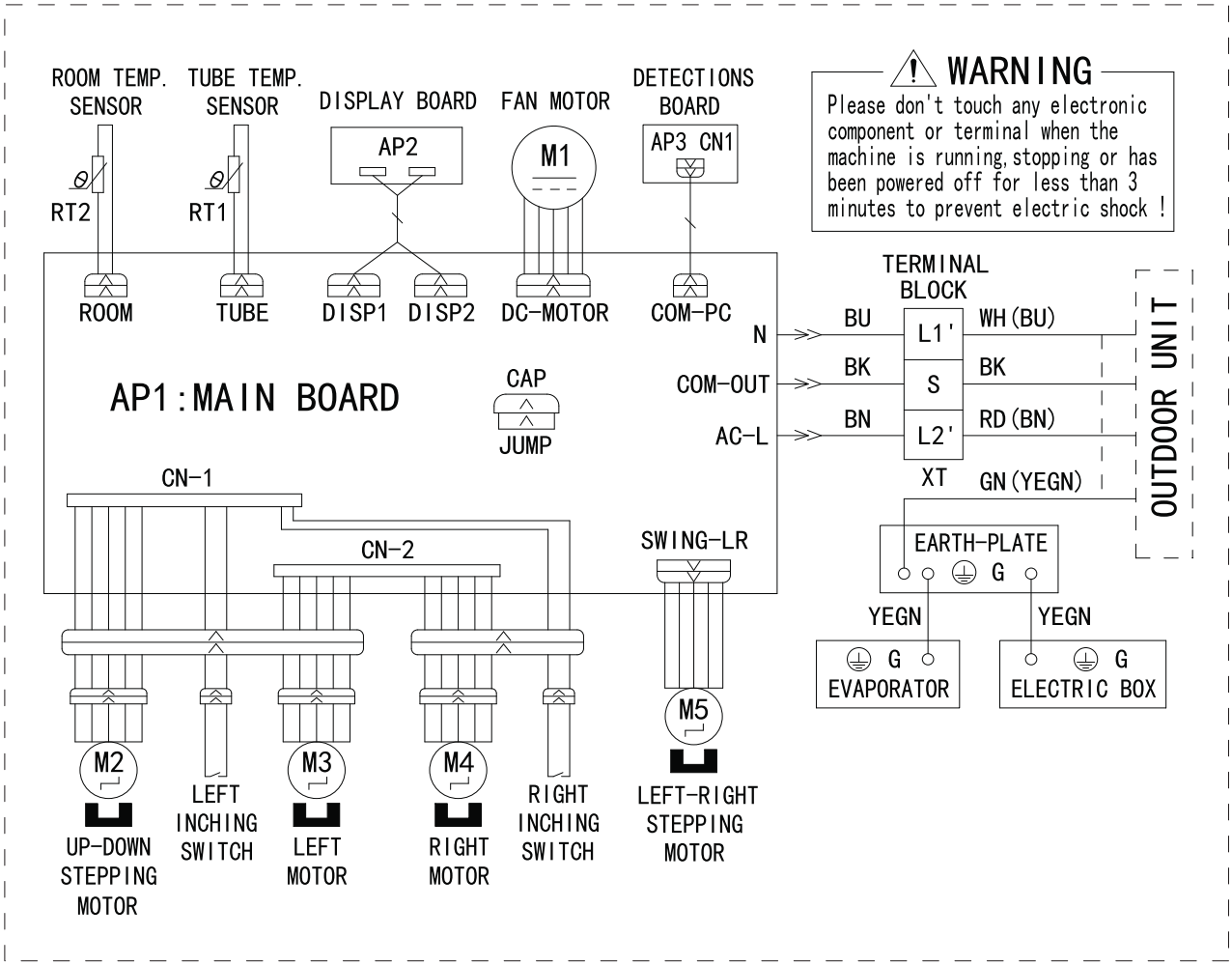

Fig. 13 – Indoor unit

OUTDOOR UNIT (SIZES 09 - 12)

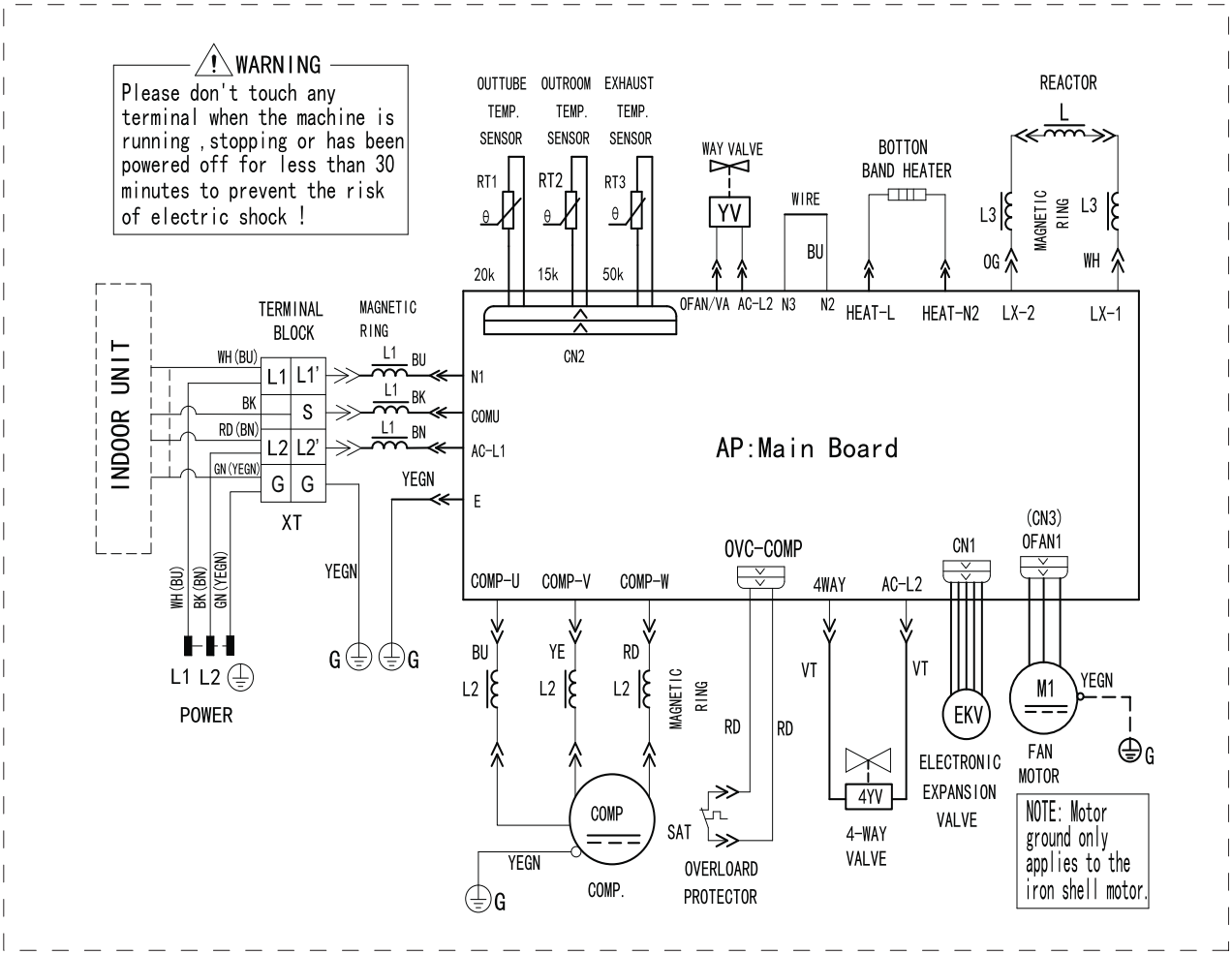

Fig. 14 – Outdoor unit

OUTDOOR UNIT (SIZE 18)

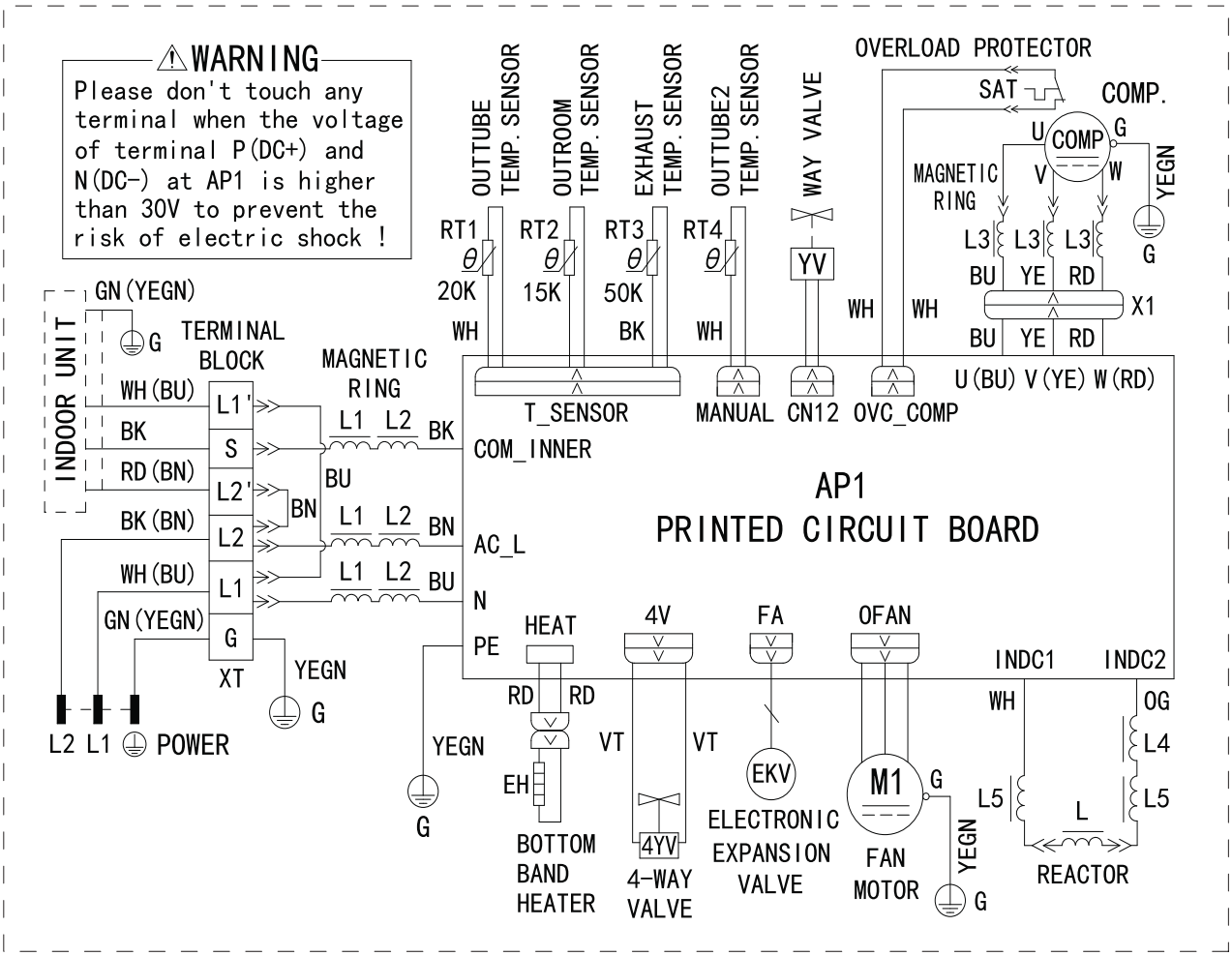

Fig. 15 – Outdoor unit

NOTE: These wiring diagrams are subject to change without notice; please refer to the one supplied with the unit.

1	Interface of neutral wire	5	Interface of DC motor	9	Interface of WIFI	13	Display interface
2	Interface of live wire	6	Up and Down swing 3	10	Interface of left and right swing	14	Interface of communication wire for neutral wire and live wire
3	Interface of fuse	7	Tube temperature sensor	11	Up and down swing 2	/	/
4	Interface of jumper cap	8	Ambient temperature sensor	12	Up and down swing 1	/	/

1	Input of live wire of power	4	Input of ground wire of power	7	Neutral wire of electric heater of compression	10	Interface of fan	13	U.V.W. Three phases of compressor
2	Input of neutral wire of power	5	Live wire of electric heater	8	Neutral wire of electric heater of chassis	11	Interface 1 of electric reactor	14	Input of overload
3	Communication interface	6	Neutral wire of 4-wire valve	9	Live wire of 4-way valve	12	Interface 2 of electric reactor	15	Temp. sensor

PART 1 - GENERAL

1.01 System Description

Indoor, wall-mounted, direct-expansion fan coils are matched with the heat pump outdoor unit.

1.02 Agency Listings

Unit shall be rated per AHRI Standards 210/240 and listed in the AHRI directory as a matched system.

1.03 Delivery, Storage, And Handling

Units shall be stored and handled per unit manufacturer's recommendations.

1.04 Warranty (For Inclusion By Specifying Engineer)

PART 2 - PRODUCTS

2.01 Equipment

A. General:

Indoor, direct-expansion, wall-mounted fan coil. Unit shall be complete with cooling/heating coil, fan, fan motor, piping connectors, electrical controls, microprocessor control system, and integral temperature sensing. Unit shall be furnished with integral wall mounting bracket and mounting hardware.

B. Unit Cabinet:

Cabinet discharge and inlet grilles shall be attractively styled, high-impact polystyrene. Cabinet shall be fully insulated for improved thermal and acoustic performance.

C. Fans:

1. Fan shall be tangential direct-drive blower type with air intake at the top of the unit and discharge at the bottom front. Automatic, motor-driven vertical air sweep shall be provided standard.
2. Air sweep operation shall be user selectable. The vertical and horizontal sweep may be adjusted (using the remote control).

D. Coil:

Coil shall be copper tube with aluminum fins and galvanized steel tube sheets. Fins shall be bonded to the tubes by mechanical expansion and specially blue hydrophilic pre-coated for enhanced wet-ability. A drip pan under the coil shall have a drain connection for hose attachment to remove condensate. Condensate pan shall have internal trap.

E. Motors:

Motors shall be open drip-proof, permanently lubricated ball bearing with inherent overload protection. Fan motors shall be 7-speed.

F. Controls:

Controls shall consist of a microprocessor-based control system which shall control space temperature, determine optimum fan speed, and run self diagnostics. The temperature control range shall be from 62°F to 86°F (17°C to 30°C) in increments of 1°F or 1°C, and have 46°F Heating Mode (Heating Setback). The wireless remote controller shall have the ability to act as the temperature sensing location for room comfort.

The unit shall have the following functions as a minimum:

1. An automatic restart after power failure at the same operating conditions as at failure.
2. A timer function to provide a minimum 24-hour timer cycle for system Auto Start/Stop.
3. Temperature-sensing controls shall sense return air temperature.
4. Indoor coil freeze protection.
5. Wireless infrared remote control to enter set points and operating conditions.
6. Automatic air sweep control to provide on or off activation of air sweep louvers.
7. Dehumidification mode shall provide increased latent removal capability by modulating system operation and set point temperature.
8. Fan-only operation to provide room air circulation when no cooling is required.
9. Diagnostics shall provide continuous checks of unit operation and warn of possible malfunctions. Error messages shall be displayed at the unit.
10. Fan speed control shall be user-selectable: Super High to Super Low, or microprocessor controlled automatic operation during all operating modes.
11. Automatic heating-to-cooling changeover in heat pump mode. Control shall include deadband to prevent rapid mode cycling between heating and cooling.
12. Indoor coil high temperature protection shall be provided to detect excessive indoor discharge temperature when unit is in heat pump mode.

G. Filters:

Unit shall have filter track with factory-supplied cleanable filters.

H. Electrical Requirements:

Indoor fan motor to operate on 208-230V on model sizes 09-18, power is supplied from outdoor unit.

I. Operating Characteristics:

The system shall have a minimum listed SEER (seasonal energy efficiency ratio) of 30.5 (size 09), 23 (size 12) and 21 (size 18) at AHRI conditions, and a minimum HSPF of 10.3.

J. Refrigerant Lines:

All units should have refrigerant lines that can be oriented to connect from the left, right or back of unit. Both refrigerant lines need to be insulated.

K. Special Features (Field Installed):

1. Condensate Pump:
   - The condensate pump shall remove condensate from the drain pan when gravity drainage cannot be used. Pump shall be designed for quiet operation. Pump shall consist of two parts: an internal reservoir/sensor assembly, and a remote sound-shielded pump assembly. A liquid level sensor in the reservoir shall stop cooling operation if the liquid level in the reservoir is unacceptable.

PART 1 - GENERAL

1.01 System Description

A. Outdoor air-cooled split system compressor sections suitable for on-the-ground, rooftop, wall hung or balcony mounting. Units shall consist of a rotary compressor, an air-cooled coil, propeller-type draw-through outdoor fan, reversing valve (HP), accumulator (HP units), metering device(s), and control box. Units shall discharge air horizontally as shown on the contract drawings. Units shall function as the outdoor component of an air-to-air heat pump system.

B. Units shall be used in a refrigeration circuit matched to ductless heat pump fan coil units.

1.02 Agency Listings

A. Unit construction shall comply with ANSI/ASHRAE 15, latest revision, and with the NEC.

B. Units shall be evaluated in accordance with UL standard 1995.

C. Units shall be listed in the CEC directory.

D. Unit cabinet shall be capable of withstanding 500-hour salt spray test per Federal Test Standard No. 141 (method 6061).

E. Air-cooled condenser coils shall be leak tested at 550 psig.

1.03 Delivery, Storage, And Handling

Units shall be shipped in one piece and shall be stored and handled per unit manufacturer's recommendations.

1.04 Warranty (For Inclusion By Specifying Engineer)

PART 2 - PRODUCTS

2.01 Equipment

A. General:

Factory assembled, single piece, air-cooled outdoor unit. Contained within the unit enclosure shall be all factory wiring, piping, controls, and the compressor.

B. Unit Cabinet:

1. Unit cabinet shall be constructed of galvanized steel, bonderized and coated with a baked-enamel finish on inside and outside.
2. Unit access panels shall be removable with minimal screws and shall provide full access to the compressor, fan, and control components.
3. Outdoor compartment shall be isolated and have an acoustic lining to assure quiet operation.

C. Fans:

1. Outdoor fans shall be direct-drive propeller type, and shall discharge air horizontally. Fans shall draw air through the outdoor coil.
2. Outdoor fan motors shall be totally-enclosed, single phase motors with class E insulation and permanently-lubricated ball bearings. Motor shall be protected by internal thermal overload protection.
3. Shaft shall have inherent corrosion resistance.
4. Fan blades shall be non metallic and shall be statically and dynamically balanced.
5. Outdoor fan openings shall be equipped with PVC metal/mesh coated protection grille over fan.

D. Compressor:

1. Compressor shall be fully hermetic rotary type.
2. Compressor shall be equipped with oil system, operating oil charge, and motor. Internal overloads shall protect the compressor from over-temperature and over-current.
3. Motor shall be NEMA rated class E, suitable for operation in a refrigerant atmosphere.
4. Compressor assembly shall be installed on rubber vibration isolators.
5. Compressors shall be single phase.

E. Outdoor Coil:

Coil shall be constructed of aluminum fins and specially blue hydrophilic pre-coated for enhanced wet-ability mechanically bonded to seamless copper tubes, which are cleaned, dehydrated, and sealed.

F. Refrigeration Components:

Refrigerant circuit components shall include brass external liquid line service valve with service gage port connections, suction line service valve with service gage connection port, service gage port connections on compressor suction and discharge lines with Schrader type fittings with brass caps, accumulator, reversing valve.

G. Controls and Safeties:

Operating controls and safeties shall be factory selected, assembled, and tested. The minimum control functions shall include the following:

1. Controls:
   a. A time delay control sequence is provided standard through the fan coil board.
   b. Automatic outdoor-fan motor protection.
2. Safeties:
   a. System diagnostics.
   b. Compressor motor current and temperature overload protection.
   c. Outdoor fan failure protection.

H. Electrical Requirements:

1. Unit shall operate on single- phase, 60 Hz power at 208-230v for unit sizes 09-18 and, as specified.
2. Unit electrical power shall be a single point connection.
3. Unit Control voltage to the indoor fan coil shall be 0-15V DC.
4. All power and control wiring must be installed per NEC and all local electrical codes.
5. Unit shall have high and low-voltage terminal block connections.

©2015 Bryant Heating & Cooling Systems 7310 W. Morris St. Indianapolis, IN 46231
Edition Date: 11/15
Catalog No. PDS538FR-619FB-03
Replaces: PDS538-619F-02
Manufacturer reserves the right to discontinue, or change at any time, specifications or designs without notice and without incurring obligations.