986TB
EVOLUTION® TWO-STAGE, VARIABLE SPEED
4-WAY MULTIPOISE CONDENSING GAS FURNACE
SERIES A

bryant®

Product Data

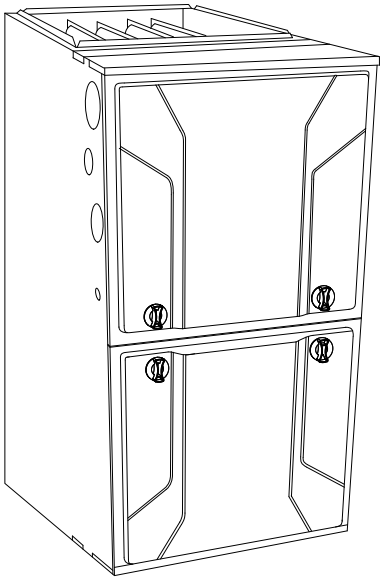

A11264

The 986TB Multipoise Variable-Speed Condensing Gas Furnace features the two-stage Evolution® System. The Perfect Heat Technology® two-stage gas system is at the heart of the comfort provided by this furnace, along with the Evolution variable-speed ECM blower motor, and two-speed inducer motor. With an Annual Fuel Utilization Efficiency (AFUE) of up to 96.7%, the Evolution two-stage gas furnace provides exceptional savings when compared to a standard furnace. This Evolution Gas Furnace also features 4-way multipoise installation flexibility, and is available in five model sizes. The 986TB can be vented for direct vent/two-pipe, ventilated combustion air, or single-pipe applications. A Bryant Connex™ and Evolution Air Conditioner or Heat Pump can be used to form a complete Evolution System. All units meet California Air Quality Management District emission requirements. All sizes are design certified in Canada.

STANDARD FEATURES

- Evolution® System; compatible with single- and multiple-zone Evolution systems.
- All sizes meet ENERGY STAR® Version 4.0 criteria for gas furnaces: 95+ AFUE; AMACF electrical rating; 2% or less cabinet airflow leakage.
- Quiet operation. Compare for yourself at HVACpartners.com.
- Ideal height 35-in. (889 mm) cabinet: short enough for taller coils, but still allows enough room for service.
- Full Evolution Features—match with the Evolution Bryant Connex™ for Evolution System benefits including by-pass less zoning and TrueSense dirty filter detection.
- Integral part of the Perfect Humidity System® Technology.
- Perfect Light™ Silicon Nitride Hot Surface Igniter.
- SmartEvap™ technology helps control humidity levels in the home when used with a compatible humidity control system.
- Fan On Plus™ technology allows control of continuous fan speed from a compatible thermostat.
- External Media Filter Cabinet included.
- 4-way multipoise design for upflow, downflow or horizontal installation, with unique vent elbow and optional through-the-cabinet downflow venting capability.
- Variable-Speed blower motor, two-speed inducer motor, and two-stage gas valve.
- Self-diagnostics and extended diagnostic data through the Advanced Product Monitor (APM) accessory or Evolution Connex™ Interface.
- Adjustable blower speed for cooling, continuous fan, and dehumidification.
- Aluminized-steel primary heat exchanger.
- Stainless-steel condensing secondary heat exchanger.
- Propane convertible (See Accessory list).
- Factory-configured ready for upflow applications.
- Fully-insulated casing including blower section.
- Convenient Air Purifier and Humidifier connections.
- Direct-vent/sealed combustion, single-pipe venting or ventilated combustion air.
- Installation flexibility: (sidewall or vertical vent).
- Residential installations may be eligible for consumer financing through the Retail Credit Program.
- Certified to leak 2% or less of nominal air conditioning CFM delivered when pressurized to 1-in. water column with all present air inlets, air outlets, and condensate drain port(s) sealed.

EVOLUTION™ SYSTEM

Perfect Heat Perfect Humidity™

ENERGY STAR

DESIGN CERTIFIED®

CERTIFIED®

AHRI CERTIFIED™ www.ahridirectory.org

Use of the AHRI Certified TM Mark indicates a manufacturer's participation in the program. For verification of certification for individual products, go to www.ahridirectory.org.

Certified System™ ISO 9001 OMI-SAI Global

Always Ask For FACTORY AUTHORIZED PARTS

SAP ORDERING NO.	CASING DIMENSIONS (IN.)			RATED HEATING OUTPUT† (BTUH)			HEATING AIRFLOW			COOLING CFM @ 0.5 ESP	MOTOR HP (VARIABLE SPEED)	MEDIA CABINET SUPPLIED (IN.)	APPROX. SHIP WT. (LB)
	H	D	W	High	Low	AFUE	CFM‡ (Low Heating)	CFM (High Heating)	Rated High Heating ESP				
986TB42060V17A–A	35	30	17.5	58,000	38,000	96.3%	855	1075	0.12	510 - 1335	1/2	16	140
986TB42080V17A–A	35	30	17.5	78,000	50,000	96.2%	1060	1500	0.15	490 - 1375	1/2	16	150
986TB60080V21A–A	35	30	21.0	78,000	51,000	96.7%	1095	1345	0.15	750 - 1945	1	20	155
986TB66100V21A–A	35	30	21.0	98,000	63,000	96.1%	1385	1575	0.20	715 - 2160	1	20	165
986TB66120V24A–A	35	30	24.5	117,000	76,000	96.7%	1640	1820	0.20	885 - 2185	1	24	189

† Capacity in accordance with DOE test procedures. Ratings are position dependent. See rating plate.
‡ Heating CFM at factory default blower motor heating settings.
ESP – External Static Pressure

986TB

FEATURES AND BENEFITS

Perfect Heat Technology® feature — This feature with Adaptive Control is a proprietary function that promotes homeowner comfort through two stages of heating. This Bryant furnace offers a patented algorithm that continually monitors and adjusts furnace operation by looking at both current and past conditions to determine the most effective stage of heating and the amount of time to run each stage, every cycle.

Perfect Humidity System® Technology — The Perfect Humidity system actively controls both temperature and humidity in the home to provide the best comfort all year long. Other systems depend on heating or cooling demand to manage the moisture in the air. But, Perfect Humidity gives the homeowner the right amount of humidity day and night, even in mild weather. No other manufacturer can do this! Perfect Humidity saves energy, too. By keeping humidity under control, the homeowner can set their thermostat lower to stay comfortable and save energy.

SmartEvap™ Technology — When paired with a compatible thermostat, this dehumidification feature overrides the cooling blower off-delay when there is a call for dehumidification. By deactivating the blower off-delay, SmartEvap technology prevents condensate that remains on the coil after a dehumidification cycle from re-humidifying throughout the home. This results in reduced humidity and a more comfortable indoor environment for the homeowner.

Unlike competitive systems, SmartEvap technology only overrides the cooling blower off-delay when humidity control is needed. Once humidity is back in control, SmartEvap re-enables the energy-saving cooling blower off-delay.

Fan On Plus™ Technology — Sometimes the constant fan setting on a standard furnace system can actually reduce homeowner comfort by providing too much or too little air! Fan On Plus technology improves comfort all year long by allowing the homeowner to select the continuous fan speed of their choice using a compatible thermostat.

HYBRID HEAT® Dual Fuel System — This system can provide more control over your monthly energy bills by automatically selecting the most economical method of heating. With HYBRID HEAT components, our system automatically switches between the gas furnace and the electric heat pump as outside temperatures change to maintain greater efficiency and comfort than with any traditional single-source heating system. The heat pump also delivers high-efficiency cooling in the summer.

Perfect Light™ Igniter — Bryant's unique SiN igniter is not only physically robust but it is also electrically robust. It is capable of running at line voltage and does not require complex voltage regulators as do other brands. This unique feature further enhances the gas furnace reliability and continues Bryant's tradition of technology leadership and innovation in providing a reliable and durable product.

Full-Featured, Communicating, Variable Speed Motors — Our ECMs (Electronically Commutated Motors) provide variable-speed operation to optimize comfort levels in the home year round; features such as passive/active dehumidification, ramping profiles, constant air flow and quiet operation. They can provide cooling match enhancements to increase the effective SEER of select Bryant air conditioner or heat pump system, and feature the highest efficiency of all indoor fan motors.

Reliable Heat Exchanger Design — The aluminized steel, clam shell primary heat exchanger was re-engineered to achieve greater efficiency out of a smaller size. The first two passes of the heat exchanger are based on the current 80% product, a design with more than ten years of field-proven performance and success. These innovations, paired with the continuation of a crimped, no-weld seam create an efficient, robust design for this essential component.

The condensing heat exchanger, a stainless steel fin and tube design, is positioned in the furnace to extract additional heat. Stainless steel coupling box componentry between heat exchangers has exceptional corrosion resistance in both natural gas and propane applications.

Media Filter Cabinet — Enhanced indoor air quality in the home is made easier with our media filter cabinet—a standard accessory on all deluxe furnaces. When installed as a part of the system, this cabinet allows for easy and convenient addition of a Bryant high efficiency air filter.

4-Way Multipoise Design — One model for all applications – there is no need to stock special downflow or horizontal models when one unit will do it all. The new heat exchanger design allows these units to achieve the certified AFUE in all positions.

Direct or Single-pipe Venting, or Optional Ventilated Combustion Air — This furnace can be installed as a 2-pipe (Direct Vent) furnace, in an optional ventilated combustion air application, or in single-pipe, non-direct vent applications. This provides added flexibility to meet diverse installation needs.

Sealed Combustion System — This furnace brings in combustion air from outside the furnace, which results in especially quiet operation. By sealing the entire combustion vestibule, the entire furnace can be made quieter, not just the burners.

Insulated Casing — Foil-faced insulation in the heat exchanger section of the casing minimizes heat loss. The acoustical insulation in the blower compartment reduces air and motor noise for quiet operation.

Monoport Burners — The burners are specially designed and finely tuned for smooth, quiet combustion and economical operation.

Bottom Closure — Factory-installed for side return; easily removable for bottom return. The multi-use bottom closure can also serve for roll-out protection in horizontal applications, and act as the bottom closure for the optional return air base accessory.

Blower Access Panel Switch — Automatically shuts off 115-v power to furnace whenever blower access panel is opened.

Quality Registration — Our furnaces are engineered and manufactured under an ISO 9001 registered quality system.

Certifications — This furnace is CSA (AGA and CGA) design certified for use with natural and propane gases. The furnace is factory-shipped for use with natural gas. A CSA listed gas conversion kit is required to convert furnace for use with propane gas. The efficiency is AHRI efficiency rating certified. This furnace meets California Air Quality Management District emission requirements.

SPECIFICATIONS

Heating Capacity and Efficiency			42060	42080	60080	66100	66120
Input	High Heat	(BTUH)	60,000	80,000	80,000	100,000	120,000
	Low Heat	(BTUH)	39,000	52,000	52,000	65,000	78,000
Output	High Heat	(BTUH)	58,000	78,000	78,000	98,000	117,000
	Low Heat	(BTUH)	38,000	50,000	51,000	63,000	76,000
Efficiency		AFUE % (ICS)	96.3	96.2	96.7	96.1	96.7
Certified Temperature Rise Range °F (°C)		High Heat	35 - 65 (19 - 36)	40 - 70 (22 - 39)	40 - 70 (22 - 39)	45 - 75 (25 - 42)	45 - 75 (25 - 42)
		Low Heat	30 - 60 (17 - 33)	30 - 60 (17 - 33)	30 - 60 (17 - 33)	30 - 60 (17 - 33)	30 - 60 (17 - 33)

Airflow Capacity and Blower Data		42060	42080	60080	66100	66120
Rated External Static Pressure (in. w.c.)	Heating	0.12	0.15	0.15	0.20	0.20
	Cooling	0.5	0.5	0.5	0.5	0.5
Airflow Delivery @ Rated ESP (CFM)	High Heat	1075	1500	1345	1575	1820
	Low Heat	855	1060	1095	1385	1640
	Cooling	1335	1375	1945	2160	2185
Cooling Capacity (tons)	400 CFM/ton	3	3.5	4.5	5	5.5
	350 CFM/ton	3.5	4	5.5	6	6
Direct-Drive Motor Type		Electronically Commutated Motor (ECM)				
Direct-Drive Motor HP		1/2	1/2	1	1	1
Motor Full Load Amps		7.7	7.7	12.8	12.8	12.8
RPM Range		300 - 1300				
Speed Selections		Variable (Communicating)				
Blower Wheel Dia x Width	in.	11 x 8	11 x 8	11x10	11 x 10	11 x 11
Air Filtration System		Factory Supplied External Media Cabinet Field Supplied Filter				
Filter Used for Certified Watt Data*		KGAWF**06UFR				

Electrical Data		42060	42080	60080	66100	66120
Input Voltage	Volts-Hertz-Phase	115-60-1				
Operating Voltage Range	Min-Max	104-127				
Maximum Input Amps	Amps	8.5	8.5	13.6	13.7	13.7
Unit Ampacity	Amps	11.5	11.5	17.9	18.0	18.0
Minimum Wire Size	AWG	14	14	12	12	12
Maximum Wire Length @ Minimum Wire Size	Feet	32	32	32	31	31
	(M)	(9.8)	(9.8)	(9.8)	(9.4)	(9.4)
Maximum Fuse/Ckt Bkr (Time-Delay Type Recommen-ded)	Amps	15	15	20	20	20
Transformer Capacity (24vac output)		40 VA				
External Control Power Available	Heating	24.3 VA				
	Cooling	34.6 VA				

Controls		42060	42080	60080	66100	66120
Gas Connection Size		1/2" - NPT				
Burners (Monoport)		3	4	4	5	6
Gas Valve (Redundant)	Manufacturer	White Rogers				
Minimum Inlet Gas pressure (in. wc)		4.5				
Maximum Inlet Gas pressure (in. wc)		13.6				
Gas Conversion Kit - Natural to Propane		KGANP5201VSP				
Gas Conversion Kit - Propane to Natural		KGAPN4401VSP				
Manufactured (Mobile) Home Kit		*not approved for MH use*				
Ignition Device		Silicon Nitride				
Limit Control		180	170	200	180	160
Heating Blower Control (Heating Off-Delay)		Adjustable: 90, 120, 150, 180 seconds				
Cooling Blower Control (Time Delay Relay)		90 seconds				
Communication System		Evolution; Evolution Zoning				
Thermostat Connections		R, W/W1, W2 Y/Y2, Y1, G, Com 24V, DHUM				
Accessory Connections		EAC (115vac); HUM (24vac); 1-stg AC (via Y/Y2)				

* See Accessory List for part numbers available.

MODEL NUMBER NOMENCLATURE

Example of a Model Number

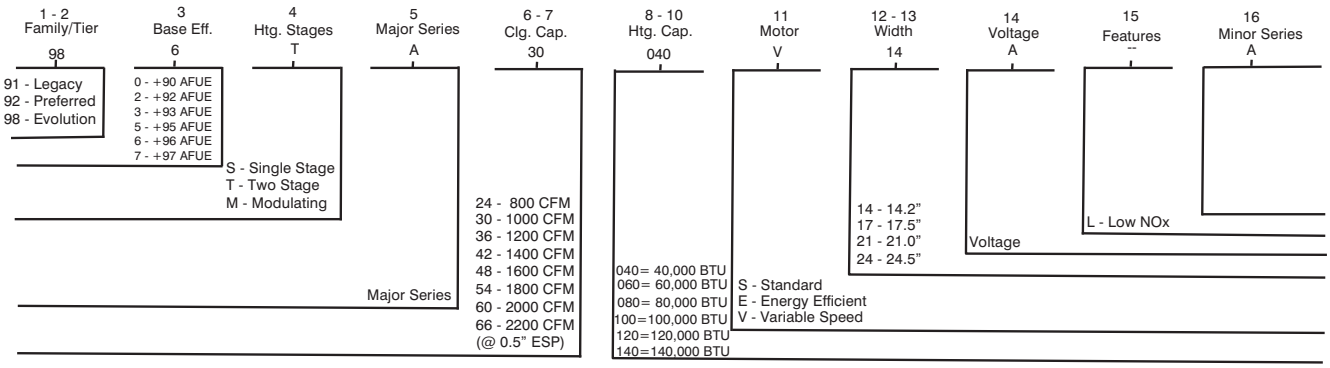

Not all familes have these models.

A12374

986TB

FURNACE COMPONENTS

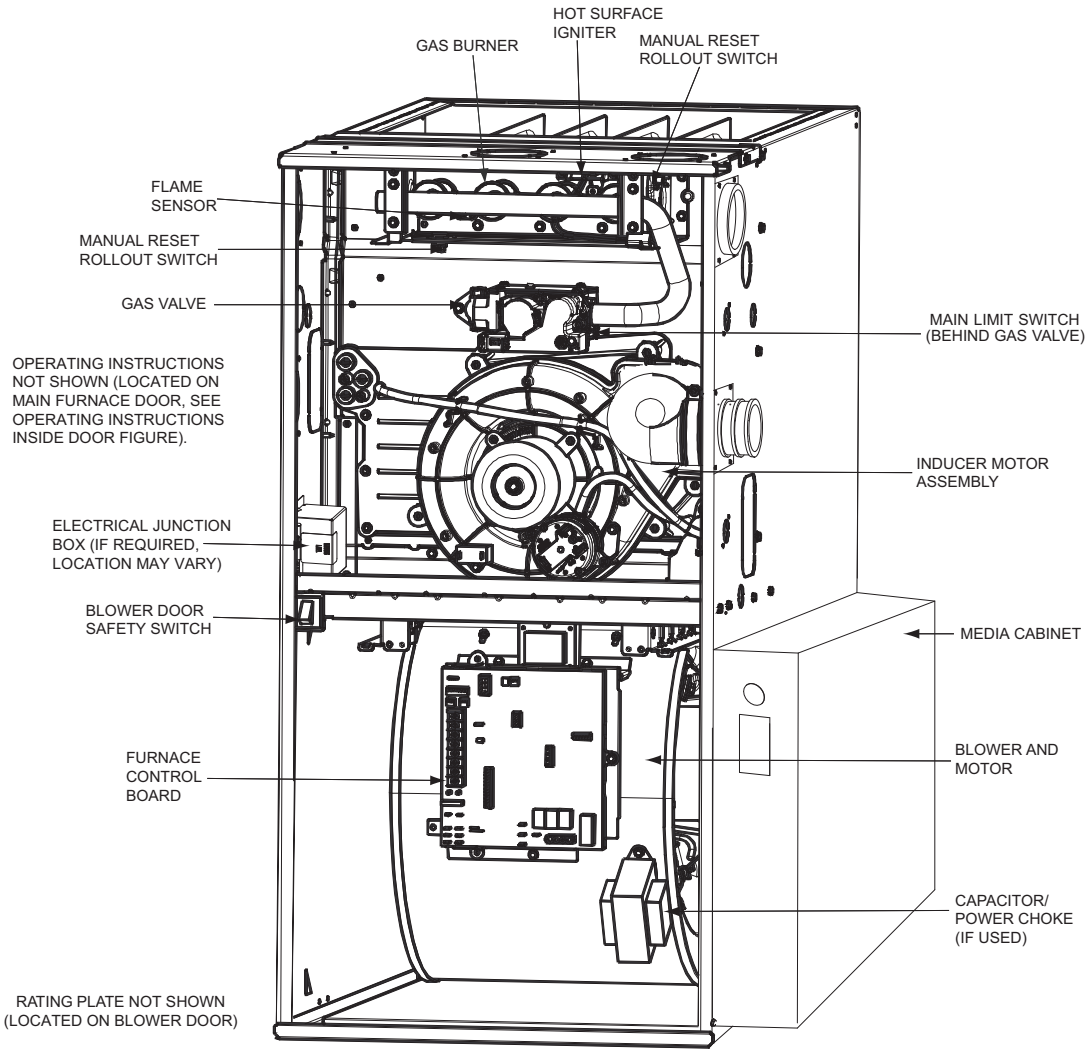

REPRESENTATIVE DRAWING ONLY, SOME MODELS MAY VARY IN APPEARANCE.

A11408

ACCESSORIES

DESCRIPTION	PART NUMBER	42060	42080	60080	66100	66120
Venting Accessories						
Vent Kit - Through the Cabinet	KGADC0101BVC	●	●	●	●	●
Vent Terminal - Concentric - 2” (51 mm)	KGAVT0701CVT	See Venting Tables				
Vent Terminal - Concentric - 3” (76 mm)	KGAVT0801CVT					
Vent Terminal Bracket - 2” (51 mm)	KGAVT0101BRA					
Vent Terminal Bracket - 3” (76 mm)	KGAVT0201BRA					
Vent Kit – Rubber Coupling	KGAAC0101RVC	See Venting Tables				
Condensate Drainage Accessories						
Freeze Protect Kit - Heat Tape	KGAHT0101CFP	●	●	●	●	●
CPVC to PVC Drain Adapters - 1/2” CPVC to 3/4” PVC	KGAAD0110PVC	●	●	●	●	●
Horizontal Trap Grommet - Direct Vent	KGACK0101HCK	All DV Horizontal				
Condensate Neutralizer Kit	P908–0001	●	●	●	●	●
External Trap Kit	KGAET0201ETK	●	●	●	●	●
Ductwork Adapter Accessories						
Furnace Base Kit for Combustible Floors	KGASB0201ALL	●	●	●	●	●
Coil Adapter Kits – No Offset	KGADA0101ALL	●	●	●	●	●
Coil Adapter Kits – Single Offset	KGADA0201ALL	●	●	●	●	●
Coil Adapter Kits – Double Offset	KGADA0301ALL	●	●	●	●	●
Return Air Base (Upflow Applications) 17.5–in. wide	KGARP0301B17	●	●			
Return Air Base (Upflow Applications) 21.0–in. wide	KGARP0301B21			●	●	
Return Air Base (Upflow Applications) 24.5–in. wide	KGARP0301B24					●
IAQ Device Duct Adapters 20.0–in. IAQ to 16 in. Side Return	KGAAD0101MEC	20”x25” IAQ Devices				
IAQ Device Duct Adapters 24.0–in. IAQ to 16 in. Side Return	KGAAD0201MEC	24”x25” IAQ Devices				
Gas Conversion Accessories						
Gas Conversion Kit - Nat to LP; Var-speed Products	KGBNP5201VSP	●	●	●	●	●
Gas Conversion Kit - LP to Nat; Var-speed Products	KGBPN4401VSP	●	●	●	●	●
Gas Orifice Kit - #42 (Nat Gas)	LH32DB207	●	●	●	●	●
Gas Orifice Kit - #43 (Nat Gas)	LH32DB202	●	●	●	●	●
Gas Orifice Kit - #44 (Nat Gas)	LH32DB200	●	●	●	●	●
Gas Orifice Kit - #45 (Nat Gas)	LH32DB205	●	●	●	●	●
Gas Orifice Kit - #46 (Nat Gas)	LH32DB208	●	●	●	●	●
Gas Orifice Kit - #47 (Nat Gas)	LH32DB078	●	●	●	●	●
Gas Orifice Kit - #48 (Nat Gas)	LH32DB076	●	●	●	●	●
Gas Orifice Kit - #54 (LP)	LH32DB203	●	●	●	●	●
Gas Orifice Kit - #55 (LP)	LH32DB201	●	●	●	●	●
Gas Orifice Kit - #56 (LP)	LH32DB206	●	●	●	●	●
Gas Orifice Kit - 1.25mm (LP)	LH32DB209	●	●	●	●	●
Gas Orifice Kit - 1.30mm (LP)	LH32DB210	●	●	●	●	●
Control Accessories						
ECM Motor Simulator Kit	KGBSD0301FMS	●	●	●	●	●
Advanced Product Monitor - APM	KGASD0301APM	●	●	●	●	●
Evolution® Touch Control – Wi–Fi	SYSTXBBECW01	●	●	●	●	●
Evolution® Touch Control – Non–Wi–Fi	SYSTXBBECN01	●	●	●	●	●
IAQ Accessories						
Filter Pack (6 pack) – Washable - 16x25x1 (406x635x25 mm)	KGAWF1306UFR	●	●	●	●	●
Filter Pack (6 pack) – Washable - 24x25x1 (610x635x25 mm)	KGAWF1506UFR	●	●	●	●	●
EZ-Flex Filter - 16” (406 mm)	EXPXXFIL0016	Use with EZXCAB–1016				
EZ-Flex Filter - 20” (508 mm)	EXPXXFIL0020	Use with EZXCAB–1020				
EZ-Flex Filter - 24” (610 mm)	EXPXXFIL0024	Use with EZXCAB–1024				
EZ-Flex Filter with End Caps - 16” (406 mm)	EXPXXUNV0016	Use with EZXCAB–1016				
EZ-Flex Filter with End Caps - 20” (508 mm)	EXPXXUNV0020	Use with EZXCAB–1020				
EZ-Flex Filter with End Caps - 24” (610 mm)	EXPXXUNV0024	Use with EZXCAB–1024				
Cartridge Media Filter - 16” (406 mm)	FILXXCAR0016	Use with FILCABXL–1016				
Cartridge Media Filter - 20” (508 mm)	FILXXCAR0020	Use with FILCABXL–1020				
Cartridge Media Filter - 24” (610 mm)	FILXXCAR0024	Use with FILCABXL–1024				
Bryant Evolution Air Purifier - 16x25 (406x635 mm)	GAPAAXBB1625-A08	Up to 1600 CFM				
Bryant Evolution Air Purifier - 20x25 (508x635 mm)	GAPAAXBB2025-A08	Up to 2000 CFM				
Bryant Evolution Air Purifier Repl. Filter- 16x25 (406x635 mm)	GAPACCCAR1625-A05	GAPAAXCC1625–A08				
Bryant Evolution Air Purifier Repl. Filter- 20x25 (508x635 mm)	GAPACCCAR2025-A05	GAPAAXCC2025–A08				
Bryant Preferred™ Air Purifier - 16x25 (508x635 mm)	PGAPAXX1625	Up to 1600 CFM				
Bryant Preferred™ Air Purifier - 20x25 (508x635 mm)	PGAPAXX2025	Up to 2000 CFM				
Bryant Preferred™ Air Purifier Repl Filter - 16x25 (406x635 mm)	PGAPXCAR1625–A02					
Bryant Preferred™ Air Purifier Repl. Filter - 20x25 (508x635 mm)	PGAPXCAR2025–A02					

● = Used with the model furnace

AIR DELIVERY

AC[4] AND HEATING AIR DELIVERY - CFM (Bottom Return[5] With Filter)

Unit Size	AC/CF Switch Settings			External Static Pressure (ESP)									
	SWx-3	SWx-2	SWx-1	0.1	0.2	0.3	0.4	0.5	0.6	0.7	0.8	0.9	1.0
42060													
AC Default:	OFF	OFF	OFF	1060	1070	1080	1080	1075	1065	1050	1035	1025	1010
CF Default:	OFF	OFF	OFF	545	530	520	525	510	See note 4				
AC (SW2) *CF (SW3)*	OFF	OFF	ON	545	530	520	525	510	See note 4				
	OFF	ON	OFF	710	710	710	695	690	See note 4				
	OFF	ON	ON	875	880	890	895	895	890	885	880	870	855
	ON	OFF	OFF	1060	1070	1080	1080	1075	1065	1050	1035	1025	1010
	ON	OFF	ON	1235	1240	1250	1255	1255	1250	1230	1190	1155	1115
	ON	ON	OFF	1235	1240	1250	1255	1255	1250	1230	1190	1155	1115
	ON	ON	ON	1235	1240	1250	1255	1255	1250	1230	1190	1155	1115
AC SW2:	Maximum Clg Airflow [2]			1425	1425	1405	1370	1335	1300	1260	1225	1190	1155
Heating (SW1)	High Heat Airflow [3]			1075	1085	1095	1095	1090	1080	1065	1050	1035	1020
	Low Heat Airflow [3]			855	855	860	870	870	865	860	855	845	785

Unit Size	AC/CF Switch Settings			External Static Pressure (ESP)									
	SWx-3	SWx-2	SWx-1	0.1	0.2	0.3	0.4	0.5	0.6	0.7	0.8	0.9	1.0
42080													
AC Default:	OFF	OFF	OFF	1055	1065	1080	1075	1065	1050	1045	1035	1025	1005
CF Default:	OFF	OFF	OFF	520	505	505	495	490	See note 4				
AC (SW2) *CF (SW3)*	OFF	OFF	ON	520	505	505	495	490	See note 4				
	OFF	ON	OFF	665	685	680	660	665	See note 4				
	OFF	ON	ON	885	895	905	900	900	895	885	875	860	845
	ON	OFF	OFF	1055	1065	1080	1075	1065	1050	1045	1035	1025	1005
	ON	OFF	ON	1245	1245	1255	1255	1260	1255	1250	1235	1220	1185
	ON	ON	OFF	1245	1245	1255	1255	1260	1255	1250	1235	1220	1185
	ON	ON	ON	1245	1245	1255	1255	1260	1255	1250	1235	1220	1185
AC SW2:	Maximum Clg Airflow [2]			1520	1485	1450	1415	1375	1335	1300	1265	1225	1190
Heating (SW1)	High Heat Airflow [3]			1520	1485	1450	1415	1375	1335	1300	1265	1225	1190
	Low Heat Airflow [3]			1055	1065	1080	1075	1065	1050	1045	1035	1025	1005

*See Notes following table.

AIR DELIVERY (CONTINUED)

AC[4] AND HEATING AIR DELIVERY - CFM (Bottom Return[5] With Filter)

Unit Size	AC/CF Switch Settings			External Static Pressure (ESP)									
	SWx-3	SWx-2	SWx-1	0.1	0.2	0.3	0.4	0.5	0.6	0.7	0.8	0.9	1.0
60080													
AC Default:	OFF	OFF	OFF	1745	1755	1755	1760	1755	1750	1745	1725	1705	1685
CF Default:	OFF	OFF	OFF	700	710	750	725	750	See note 4				
AC (SW2) CF (SW3)	OFF	OFF	ON	700	710	750	725	750	See note 4				
	OFF	ON	OFF	830	860	870	890	960	See note 4				
	OFF	ON	ON	1045	1045	1060	1070	1070	1070	1095	1090	1080	1070
	ON	OFF	OFF	1215	1220	1245	1240	1235	1235	1225	1220	1235	1235
	ON	OFF	ON	1370	1370	1390	1390	1400	1395	1400	1390	1390	1385
	ON	ON	OFF	1745	1755	1755	1760	1755	1750	1745	1725	1705	1685
	ON	ON	ON	1745	1755	1755	1760	1755	1750	1745	1725	1705	1685
AC SW2:	Maximum Clg Airflow [2]			1920	1920	1945	1945	1945	1960	1950	1940	1915	1900
Heating (SW1)	High Heat Airflow [3]			1340	1355	1370	1385	1380	1385	1400	1400	1385	1380
	Low Heat Airflow [3]			1080	1115	1115	1120	1125	1135	1125	1120	1125	1110

Unit Size	AC/CF Switch Settings			External Static Pressure (ESP)									
	SWx-3	SWx-2	SWx-1	0.1	0.2	0.3	0.4	0.5	0.6	0.7	0.8	0.9	1.0
66100													
AC Default:	OFF	OFF	OFF	1820	1825	1840	1845	1840	1835	1825	1805	1780	1770
CF Default:	OFF	OFF	OFF	750	740	745	730	715	See note 4				
AC (SW2) CF (SW3)	OFF	OFF	ON	750	740	745	730	715	See note 4				
	OFF	ON	OFF	900	900	915	910	905	See note 4				
	OFF	ON	ON	1070	1075	1095	1095	1090	1085	1095	1080	1065	1070
	ON	OFF	OFF	1280	1285	1305	1305	1310	1305	1295	1300	1290	1285
	ON	OFF	ON	1440	1445	1465	1465	1470	1485	1480	1485	1475	1460
	ON	ON	OFF	1820	1825	1840	1845	1840	1835	1825	1805	1780	1770
	ON	ON	ON	2135	2140	2140	2135	2140	2130	2115	2100	2070	2015
AC SW2:	Maximum Clg Airflow [2]			2160	2165	2175	2170	2160	2150	2135	2120	2065	2020
Heating (SW1)	High Heat Airflow [3]			1570	1575	1595	1595	1600	1605	1600	1600	1590	1575
	Low Heat Airflow [3]			1365	1385	1395	1395	1395	1400	1400	1405	1395	1380

*See Notes following table.

986TB

AIR DELIVERY (CONTINUED)

AC[4] AND HEATING AIR DELIVERY - CFM (Bottom Return[5] With Filter)

Unit Size	AC/CF Switch Settings			External Static Pressure (ESP)									
	SWx-3	SWx-2	SWx-1	0.1	0.2	0.3	0.4	0.5	0.6	0.7	0.8	0.9	1.0
66120													
AC Default:	OFF	OFF	OFF	1850	1855	1860	1855	1850	1830	1805	1775	1750	1730
CF Default:	OFF	OFF	OFF	930	925	915	900	885	See note 4				
AC (SW2) *CF (SW3)*	OFF	OFF	ON	765	745	740	705	680	See note 4				
	OFF	ON	OFF	930	925	915	900	885	See note 4				
	OFF	ON	ON	1095	1100	1110	1105	1085	See note 4				
	ON	OFF	OFF	1265	1255	1265	1280	1275	1285	1270	1260	1250	1230
	ON	OFF	ON	1465	1455	1470	1465	1465	1470	1455	1450	1435	1415
	ON	ON	OFF	1850	1855	1860	1855	1850	1830	1805	1775	1750	1730
	ON	ON	ON	2200	2200	2200	2190	2185	2170	2145	2085	1990	1890
AC SW2:	Maximum Clg Airflow [2]			2200	2200	2200	2190	2185	2170	2145	2085	1990	1890
Heating (SW1)	High Heat Airflow [3]			1815	1820	1825	1820	1815	1795	1775	1745	1720	1700
	Low Heat Airflow [3]			1640	1640	1645	1650	1645	1645	1630	1620	1600	1580

1. Set SW1-5 to ON for nominal 400 CFM/ton (+15% airflow).
   Set SW4-3 to ON for nominal 325 CFM/ton (-7% airflow).
   Set both SW1-5 and SW4-3 to ON for nominal 370 CFM/ton (+7% airflow).
   The above adjustments in airflow are subject to motor horsepower range/capacity.
2. Maximum cooling airflow is achieved when switches SW2-1, SW2-2, SW2-3 and SW1-5 are set to ON, and SW4-3 is set to OFF.
3. All heating CFM's are when low heat rise adjustment switch (SW1-3) and comfort/efficiency adjustment switch (SW1-4) are both set to OFF.
4. Ductwork must be sized for high-heating CFM within the operational range of ESP. Operation within the blank areas of the chart is not recommended because high-heat operation will be above 1.0 ESP.
5. All airflows on 21" (533 mm) casing size furnaces are 5% less on side return only installations.
6. Return air above 1800 CFM on 24.5" (622 mm) casing sizes requires two sides, one side and bottom, or bottom only to allow sufficient airflow to the furnace.
7. Airflows over 1800 CFM require bottom return, two-side return, or bottom and side return; otherwise excessive watt draws may result. A minimum filter size of 20" x 25" (508 x 635 mm) is required.

MAXIMUM EQUIVALENT VENT LENGTH - FT. (M)

NOTE: Maximum Equivalent Vent Length (MEVL) includes standard and concentric vent termination and does NOT include elbows. Use Table 2 - Deductions from Maximum Equivalent Vent Length to determine allowable vent length for each application.

Table 1 – Maximum Equivalent Vent Length - Ft. (M)
0 to 4500 Ft. (0 to 1370 M) Altitude

Altitude FT (M)	Unit Size BTU/Hr	DIRECT VENT (2-PIPE) AND NON-DIRECT VENT (1-PIPE)									
		Vent Pipe Diameter (in.) [1]									
		1-1/2		2		2-1/2		3		4	
0 to 2000 (0 to 610)	40,000 [3]	50	(15.2)	210	(64.0)	250	(76.2)	NA [2]		NA	
	60,000	30	(9.1)	135	(41.1)	235	(71.6)	265	(80.8)	NA	
	80,000	20	(6.1)	70	(21.3)	175	(53.3)	235	(71.6)	265	(80.8)
	100,000	NA		25	(7.6)	110	(33.5)	235	(71.6)	265	(80.8)
	120,000	NA		NA		15	(4.6)	100	(30.5)	250	(76.2)
	140,000 [4]	NA		NA		10	(3.0)	90	(27.4)	210	(64.0)
2001 to 3000 (610 to 914)	40,000	45	(13.7)	198	(60.4)	232	(70.7)	NA		NA	
	60,000	27	(8.2)	127	(38.7)	222	(67.7)	250	(76.2)	NA	
	80,000	17	(5.2)	64	(19.5)	165	(50.3)	222	(67.7)	249	(75.9)
	100,000	NA		22	(6.7)	104	(31.7)	223	(68.0)	250	(76.2)
	120,000	NA		NA		11	(3.4)	93	(28.3)	237	(72.2)
	140,000 [4]	NA		NA		NA		80	(24.4)	185	(56.4)
3001 to 4000 (914 to 1219)	40,000	39	(11.9)	184	(56.1)	214	(65.2)	NA		NA	
	60,000	23	(7.0)	119	(36.3)	210	(64.0)	235	(71.6)	NA	
	80,000	15	(4.6)	59	(18.0)	155	(47.2)	210	(64.0)	232	(70.7)
	100,000	NA		19	(5.8)	98	(29.9)	211	(64.3)	236	(71.9)
	120,000	NA		NA		8	(2.4)	86	(26.2)	224	(68.3)
	140,000 [4]	NA		NA		NA		79	(24.1)	158	(48.2)
4001 to 4500 (1219 to 1370)	40,000	36	(11.0)	177	(53.9)	205	(62.5)	NA		NA	
	60,000	21	(6.4)	115	(35.1)	204	(62.2)	228	(69.5)	NA	
	80,000	14	(4.3)	56	(17.1)	150	(45.7)	202	(61.6)	224	(68.3)
	100,000	NA		17	(5.2)	94	(28.7)	205	(62.5)	229	(69.8)
	120,000	NA		NA		NA		83	(25.3)	217	(66.1)
	140,000 [4]	NA		NA		NA		69	(21.0)	146	(44.5)

NOTES: See notes at end of venting tables.
See Table 3 for altitudes over 4500 ft. (1370 M)

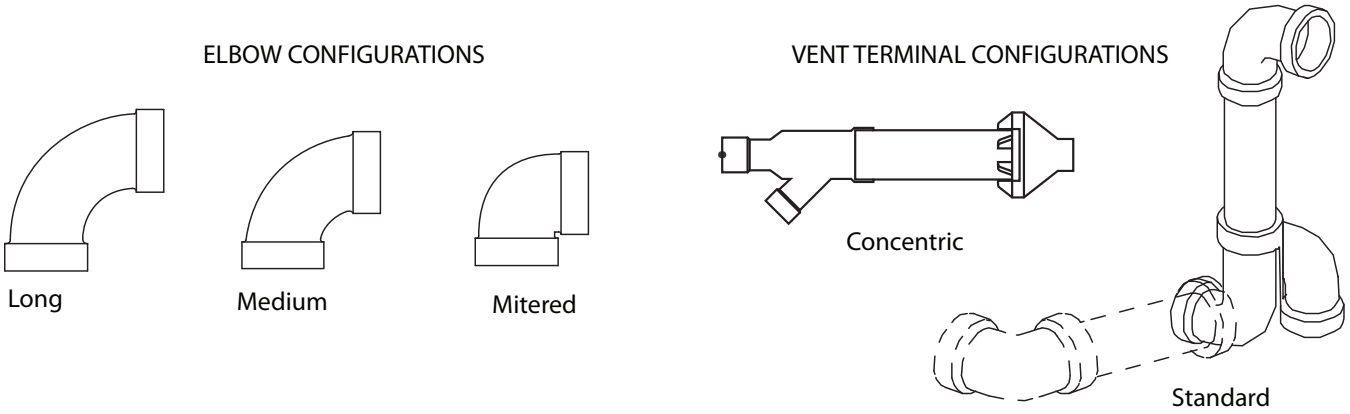

Table 2 – Deductions from Maximum Equivalent Vent Length - Ft. (M)

Pipe Diameter (in):	1-1/2		2		2-1/2		3		4	
Mitered 90° Elbow	8	(2.4)	8	(2.4)	8	(2.4)	8	(2.4)	8	(2.4)
Medium Radius 90° Elbow	5	(1.5)	5	(1.5)	5	(1.5)	5	(1.5)	5	(1.5)
Long Radius 90° Elbow	3	(0.9)	3	(0.9)	3	(0.9)	3	(0.9)	3	(0.9)
Mitered 45° Elbow	4	(1.2)	4	(1.2)	4	(1.2)	4	(1.2)	4	(1.2)
Medium Radius 45° Elbow	2.5	(0.8)	2.5	(0.8)	2.5	(0.8)	2.5	(0.8)	2.5	(0.8)
Long Radius 45° Elbow	1.5	(0.5)	1.5	(0.5)	1.5	(0.5)	1.5	(0.5)	1.5	(0.5)
Tee	16	(4.9)	16	(4.9)	16	(4.9)	16	(4.9)	16	(4.9)
Concentric Vent Termination	NA		0	(0.0)	NA		0	(0.0)	NA	
Standard Vent Termination	0	(0.0)	0	(0.0)	0	(0.0)	0	(0.0)	0	(0.0)

Venting System Length Calculations

The Total Equivalent Vent Length (TEVL) for **EACH** combustion air or vent pipe equals the length of the venting system, plus the equivalent length of elbows used in the venting system from Table 2.

Standard vent terminations or factory accessory concentric vent terminations count for zero deduction.

See vent system manufacturer's data for equivalent lengths of flexible vent pipe or other termination systems. **DO NOT ASSUME** that one foot of flexible vent pipe equals one foot of straight PVC/ABS DWV vent pipe.

Compare the Total Equivalent Vent Length to the Maximum Equivalent Vent Lengths in Tables 1 and 3.

Example 1

A direct-vent 60,000 Btuh furnace installed at 2100 ft. (640 M). Venting system includes, **FOR EACH PIPE**, 100 feet (30 M) of vent pipe, 95 feet (28 M) of combustion air inlet pipe, (3) 90° long radius elbows, (2) 45° long radius elbows and a factory accessory concentric vent kit.

Can this application use 2-in. (50 mm ND) PVC/ABS DWV vent piping?

Measure the required linear length of air inlet and vent pipe; insert the longest of the two here:					100 ft	Use length of the longer of the vent or air inlet piping system
Add equiv length of (3) 90° long-radius elbows (use the highest number of elbows for either the vent or inlet pipe)	3	x	3 ft	=	9 ft.	From Table 2
Add equiv length of (2) 45° long-radius elbows (use the highest number of elbows for either the vent or inlet pipe)	2	x	1.5 ft	=	3 ft.	From Table 2
Add equiv length of vent termination					0 ft.	From Table 2
Add correction for flexible vent pipe, if any					0 ft.	From Vent Manufacturer's instructions; zero for PVC/ABS DWV
Total Equivalent Vent Length (TEVL)					112 ft.	Add all of the above lines
Maximum Equivalent Vent Length (MEVL)					127 ft.	For 2" pipe from Table 1
Is TEVL less than MEVL?					**YES**	**Therefore, 2" pipe may be used**

Example 2

A direct-vent 60,000 Btuh furnace installed at 2100 ft. (640 M) Venting system includes, **FOR EACH PIPE**, 100 feet (30 M) of vent pipe, 95 feet (28 M) of combustion air inlet pipe, (3) 90° long radius elbows, and a polypropylene concentric vent kit. Also includes 20 feet (6 M) of flexible polypropylene vent pipe, included within the 100 feet (30 M) of vent pipe.

Assume that one meter of flexible 60 mm or 80 mm polypropylene pipe equals 1.8 meters of PVC/ABS pipe. **VERIFY FROM VENT MANUFACTURER'S INSTRUCTIONS.**

Can this application use 60 mm (O.D.) polypropylene vent piping? If not what size piping can be used?

Measure the required linear length of air inlet and vent pipe; insert the longest of the two here:					100 ft	Use length of the longer of the vent or air inlet piping system
Add equiv length of (3) 90° long-radius elbows (use the highest number of elbows for either the vent or inlet pipe)	3	x	3 ft	=	9 ft.	From Vent Manufacturer's instructions
Add equiv length of (2) 45° long-radius elbows (use the highest number of elbows for either the vent or inlet pipe)	0	x		=	0 ft.	From Vent Manufacturer's instructions
Add equiv length of of vent termination	9 M	x	3 ft/M	=	18 ft.	From Vent Manufacturer's instructions
Add correction for flexible vent pipe, if any	1.8	x	20 ft	=	36 ft.	From Vent Manufacturer's instructions
Total Equivalent Vent Length (TEVL)					163 ft.	Add all of the above lines
Maximum Equivalent Vent Length (MEVL)					127 ft.	For 2" pipe from Table 1
Is TEVL less than MEVL?					**NO**	**Therefore, 60mm pipe may NOT be used; try 80 mm**
Maximum Equivalent Vent Length (MEVL)					250 ft.	For 3" pipe from Table 1
Is TEVL less than MEVL?					**YES**	**Therefore, 80 mm pipe may be used**

MAXIMUM EQUIVALENT VENT LENGTH - FT. (M) (CONTINUED)

NOTE: Maximum Equivalent Vent Length (MEVL) includes standard and concentric vent termination and does NOT include elbows. Use Table 2 - Deductions from Maximum Equivalent Vent Length to determine allowable vent length for each application.

Table 3 – Maximum Equivalent Vent Length - Ft. (M)
4501 to 10,000 Ft. (1371 to 3048 M) Altitude

Altitude FT (M) [5]	Unit Size	DIRECT VENT (2-PIPE) AND SINGLE-PIPE									
		Vent Pipe Diameter (in.) [1]									
		1-1/2		2		2-1/2		3		4	
4501 to 5000 (1370 to 1524)	40,000	33	(10.1)	171	(52.1)	196	(59.7)	NA [2]		NA	
	60,000	20	(6.1)	111	(33.8)	198	(60.4)	221	(67.4)	NA	
	80,000	13	(4.0)	54	(16.5)	146	(44.5)	195	(59.4)	216	(65.8)
	100,000	NA		16	(4.9)	91	(27.7)	200	(61.0)	222	(67.7)
	120,000	NA		NA		NA		80	(24.4)	211	(64.3)
	140,000 [4]	NA		NA		NA		60	(18.3)	134	(40.8)
5001 to 6000 (1524 to 1829)	40,000	27	(8.2)	158	(48.2)	179	(54.6)	NA		NA	
	60,000	16	(4.9)	103	(31.4)	186	(56.7)	207	(63.1)	NA	
	80,000	11	(3.4)	49	(14.9)	137	(41.8)	183	(55.8)	200	(61.0)
	100,000	NA		12	(3.7)	85	(25.9)	188	(57.3)	208	(63.4)
	120,000	NA		NA		NA		74	(22.6)	199	(60.7)
	140,000 [4]	NA		NA		NA		50	(15.2)	109	(33.2)
6001 to 7000 (1829 to 2134)	40,000	21	(6.4)	145	(44.2)	162	(49.4)	NA		NA	
	60,000	13	(4.0)	96	(29.3)	174	(53.0)	194	(59.1)	NA	
	80,000	NA		44	(13.4)	120	(36.6)	171	(52.1)	185	(56.4)
	100,000	NA		10	(3.0)	79	(24.1)	178	(54.3)	195	(59.4)
	120,000	NA		NA		NA		68	(20.7)	187	(57.0)
	140,000 [4]	NA		NA		NA		41	(12.5)	87	(26.5)
7001 to 8000 (2134 to 2438)	40,000	15	(4.6)	133	(40.5)	146	(44.5)	NA		NA	
	60,000	10	(3.0)	89	(27.1)	163	(49.7)	181	(55.2)	NA	
	80,000	NA		40	(12.2)	120	(36.6)	159	(48.5)	170	(51.8)
	100,000	NA		NA		73	(22.3)	167	(50.9)	182	(55.5)
	120,000	NA		NA		NA		62	(18.9)	175	(53.3)
	140,000 [4]	NA		NA		NA		32	(9.8)	63	(19.2)
8001 to 9000 (2438 to 2743)	40,000	10	(3.0)	121	(36.9)	130	(39.6)	NA		NA	
	60,000	7	(2.1)	82	(25.0)	152	(46.3)	168	(51.2)	NA	
	80,000	NA		35	(10.7)	111	(33.8)	148	(45.1)	156	(47.5)
	100,000	NA		NA		67	(20.4)	157	(47.9)	170	(51.8)
	120,000	NA		NA		NA		56	(17.1)	164	(50.0)
	140,000 [4]	NA		NA		NA		23	(7.0)	42	(12.8)
9001 to 10,000 (2743 to 3048)	40,000	5	(1.5)	110	(33.5)	115	(35.1)	NA		NA	
	60,000	NA		76	(23.2)	142	(43.3)	156	(47.5)	NA	
	80,000	NA		31	(9.4)	103	(31.4)	137	(41.8)	142	(43.3)
	100,000	NA		NA		62	(18.9)	147	(44.8)	157	(47.9)
	120,000	NA		NA		NA		51	(15.5)	153	(46.6)
	140,000 [4]	NA		NA		NA		16	(4.9)	20	(6.1)

NOTES:
1. Use only the vent pipe sizes shown for each furnace. It is NOT necessary to choose the smallest diameter pipe possible for venting.
2. NA – Not allowed. Pressure switch will not close, or flame disturbance may result.
3. Total equivalent vent lengths under 10' for 40,000 BTUH furnaces from 0 to 2000 ft. (0 to 610 M) above sea level require use of an outlet choke plate . **Failure to use an outlet choke when required may result in flame disturbance or flame sense lockout.**
4. Not all furnace families include 140,000 BTUH input models.
5. Vent sizing for Canadian installations over 4500 ft (1370 M) above sea level are subject to acceptance by local authorities having jurisdiction.
6. Size both the combustion air and vent pipe independently, then use the larger size for both pipes.
7. Assume the two 45° elbows equal one 90° elbow. Wide radius elbows are desirable and may be required in some cases.
8. Elbow and pipe sections within the furnace casing and at the vent termination should not be included in vent length or elbow count.
9. The minimum pipe length is 5 ft. (1.5 M) linear feet (meters) for all applications.
10. Use 3–in. (76 mm) diameter vent termination kit for installations requiring 4–in. (102 mm) diameter pipe.

MAXIMUM ALLOWABLE EXPOSED VENT PIPE LENGTH INSULATION TABLE - FT. / M

Two Stage Furnace High Heat Input	Winter Design Temp ° F (° C)	Pipe Length in Ft. & M	No Insulation					3/8-in. (9.5 mm)					1/2-in. (12.7 mm)				
			Pipe Diameter-inches (mm)					Pipe Diameter-inches (mm)					Pipe Diameter-inches (mm)				
			1.5	2.0	2.5	3.0	4.0	1.5	2.0	2.5	3.0	4.0	1.5	2.0	2.5	3.0	4.0
			(38)	(51)	(64)	(76)	(102)	(38)	(51)	(64)	(76)	(102)	(38)	(51)	(64)	(76)	(102)
40000*	20 (-10)	Ft.	40.0	35.0	35.0	N/A	N/A	50.0	104.0	94.0	N/A	N/A	50.0	122.0	110.0	N/A	N/A
		M	12.2	10.7	10.7	N/A	N/A	15.2	31.7	28.7	N/A	N/A	15.2	37.2	33.5	N/A	N/A
	0 (-20)	Ft.	19.0	14.0	12.0	N/A	N/A	50.0	61.0	54.0	N/A	N/A	50.0	74.0	65.0	N/A	N/A
		M	5.8	4.3	3.7	N/A	N/A	15.2	18.6	16.5	N/A	N/A	15.2	22.6	19.8	N/A	N/A
	-20 (-30)	Ft.	9.0	3.0	1.0	N/A	N/A	50.0	41.0	35.0	N/A	N/A	50.0	51.0	43.0	N/A	N/A
		M	2.7	0.9	0.3	N/A	N/A	15.2	12.5	10.7	N/A	N/A	15.2	15.5	13.1	N/A	N/A
	-40 (-40)	Ft.	3.0	0.0	0.0	N/A	N/A	39.0	29.0	23.0	N/A	N/A	48.0	37.0	30.0	N/A	N/A
		M	0.9	0.0	0.0	N/A	N/A	11.9	8.8	7.0	N/A	N/A	14.6	11.3	9.1	N/A	N/A
60000	20 (-10)	Ft.	30.0	51.0	51.0	45.0	N/A	30.0	135.0	138.0	120.0	N/A	30.0	135.0	162.0	141.0	N/A
		M	9.1	15.5	15.5	13.7	N/A	9.1	41.1	42.1	36.6	N/A	9.1	41.1	49.4	43.0	N/A
	0 (-20)	Ft.	30.0	24.0	23.0	16.0	N/A	30.0	93.0	82.0	69.0	N/A	30.0	111.0	98.0	83.0	N/A
		M	9.1	7.3	7.0	4.9	N/A	9.1	28.3	25.0	21.0	N/A	9.1	33.8	29.9	25.3	N/A
	-20 (-30)	Ft.	18.0	11.0	9.0	1.0	N/A	30.0	65.0	56.0	44.0	N/A	30.0	79.0	68.0	55.0	N/A
		M	5.5	3.4	2.7	0.3	N/A	9.1	19.8	17.1	13.4	N/A	9.1	24.1	20.7	16.8	N/A
	-40 (-40)	Ft.	10.0	3.0	0.0	0.0	N/A	30.0	48.0	40.0	29.0	N/A	30.0	59.0	50.0	38.0	N/A
		M	3.0	0.9	0.0	0.0	N/A	9.1	14.6	12.2	8.8	N/A	9.1	18.0	15.2	11.6	N/A
80000	20 (-10)	Ft.	20.0	64.0	64.0	56.0	47.0	20.0	70.0	173.0	150.0	125.0	20.0	70.0	175.0	177.0	147.0
		M	6.1	19.5	19.5	17.1	14.3	6.1	21.3	52.7	45.7	38.1	6.1	21.3	53.3	53.9	44.8
	0 (-20)	Ft.	20.0	32.0	30.0	22.0	11.0	20.0	70.0	104.0	87.0	67.0	20.0	70.0	124.0	104.0	82.0
		M	6.1	9.8	9.1	6.7	3.4	6.1	21.3	31.7	26.5	20.4	6.1	21.3	37.8	31.7	25.0
	-20 (-30)	Ft.	20.0	17.0	14.0	6.0	0.0	20.0	70.0	71.0	57.0	40.0	20.0	70.0	86.0	71.0	52.0
		M	6.1	5.2	4.3	1.8	0.0	6.1	21.3	21.6	17.4	12.2	6.1	21.3	26.2	21.6	15.8
	-40 (-40)	Ft.	15.0	7.0	5.0	0.0	0.0	20.0	61.0	52.0	40.0	24.0	20.0	70.0	64.0	50.0	33.0
		M	4.6	2.1	1.5	0.0	0.0	6.1	18.6	15.8	12.2	7.3	6.1	21.3	19.5	15.2	10.1
100000	20 (-10)	Ft.	N/A	25.0	79.0	70.0	59.0	N/A	25.0	110.0	186.0	155.0	N/A	25.0	110.0	219.0	182.0
		M	N/A	7.6	24.1	21.3	18.0	N/A	7.6	33.5	56.7	47.2	N/A	7.6	33.5	66.8	55.5
	0 (-20)	Ft.	N/A	25.0	40.0	31.0	19.0	N/A	25.0	110.0	109.0	86.0	N/A	25.0	110.0	131.0	104.0
		M	N/A	7.6	12.2	9.4	5.8	N/A	7.6	33.5	33.2	26.2	N/A	7.6	33.5	39.9	31.7
	-20 (-30)	Ft.	N/A	23.0	21.0	13.0	0.0	N/A	25.0	91.0	74.0	54.0	N/A	25.0	110.0	90.0	68.0
		M	N/A	7.0	6.4	4.0	0.0	N/A	7.6	27.7	22.6	16.5	N/A	7.6	33.5	27.4	20.7
	-40 (-40)	Ft.	N/A	13.0	10.0	1.0	0.0	N/A	25.0	68.0	53.0	35.0	N/A	25.0	83.0	66.0	46.0
		M	N/A	4.0	3.0	0.3	0.0	N/A	7.6	20.7	16.2	10.7	N/A	7.6	25.3	20.1	14.0
120000	20 (-10)	Ft.	N/A	N/A	15.0	85.0	73.0	N/A	N/A	15.0	100.0	190.0	N/A	N/A	15.0	100.0	224.0
		M	N/A	N/A	4.6	25.9	22.3	N/A	N/A	4.6	30.5	57.9	N/A	N/A	4.6	30.5	68.3
	0 (-20)	Ft.	N/A	N/A	15.0	41.0	29.0	N/A	N/A	15.0	100.0	109.0	N/A	N/A	15.0	100.0	131.0
		M	N/A	N/A	4.6	12.5	8.8	N/A	N/A	4.6	30.5	33.2	N/A	N/A	4.6	30.5	39.9
	-20 (-30)	Ft.	N/A	N/A	15.0	20.0	7.0	N/A	N/A	15.0	94.0	71.0	N/A	N/A	15.0	114.0	88.0
		M	N/A	N/A	4.6	6.1	2.1	N/A	N/A	4.6	28.7	21.6	N/A	N/A	4.6	34.7	26.8
	-40 (-40)	Ft.	N/A	N/A	15.0	7.0	0.0	N/A	N/A	15.0	69.0	48.0	N/A	N/A	15.0	85.0	62.0
		M	N/A	N/A	4.6	2.1	0.0	N/A	N/A	4.6	21.0	14.6	N/A	N/A	4.6	25.9	18.9

* Not all families have these models.

* Pipe length (ft) specified for maximum pipe lengths located in unconditioned spaces. Pipes located in unconditioned space cannot exceed total allowable pipe length calculated from Table 1 or 3.

† Insulation thickness based on R value of 3.5 per in.

RETURN AIR TEMPERATURE

This furnace is designed for continuous return-air minimum temperature of 60°F (15°C) db or intermittent operation down to 55°F (13°C) db such as when used with a night setback thermometer. Return-air temperature must not exceed 80°F (27°C) db. Failure to follow these return air limits may affect reliability of heat exchangers, motors and controls.

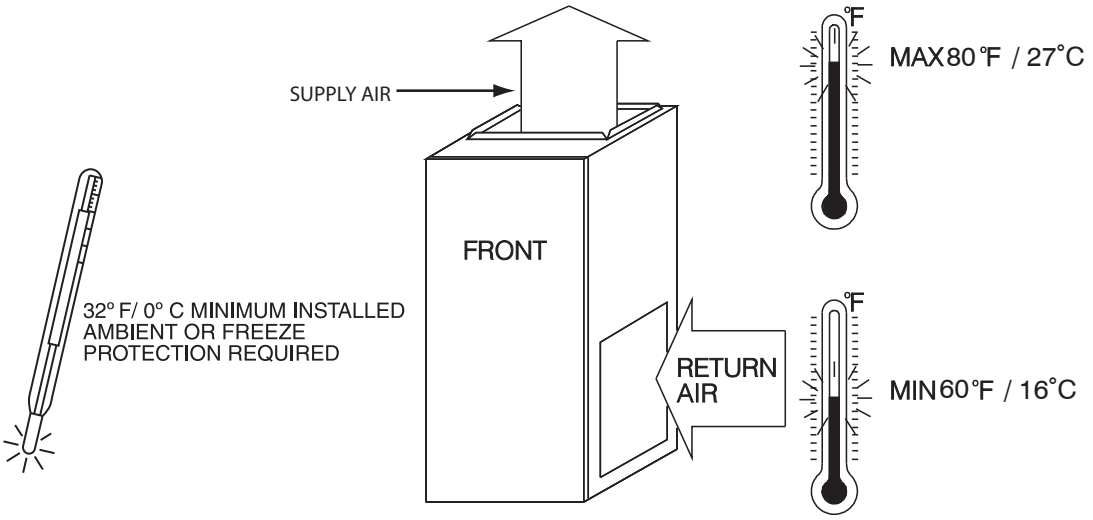

A10490

986TB

MINIMUM CLEARANCES TO COMBUSTIBLE MATERIALS

POSITION	CLEARANCE
Rear	0 (0 mm)
Front (Combustion air openings in furnace and in structure)	1 in. (25 mm)
Required for service**	24 in. (610 mm)*
All Sides of Supply Plenum**	1 in. (25 mm)
Sides	0 (0 mm)
Vent	0 (0 mm)
Top of Furnace	1 in. (25 mm)

* Recommended

** Consult your local building codes

COMBUSTION-AIR PIPE FOR NON-DIRECT (1-PIPE) VENT APPLICATION

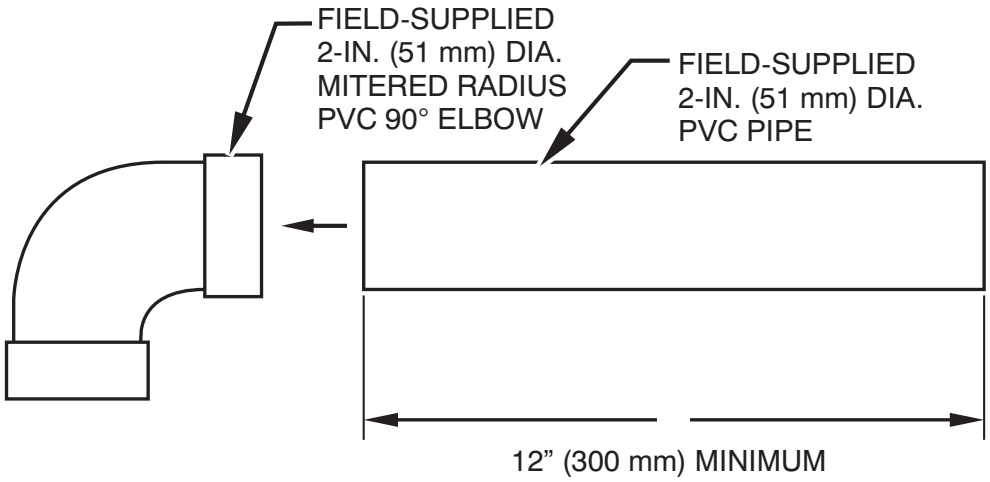

A12376

NOTE: See Installation Instructions for specific venting configurations.

DOWNFLOW SUBBASE

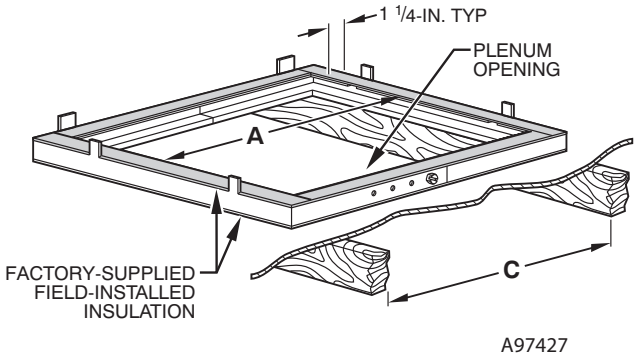

Assembled

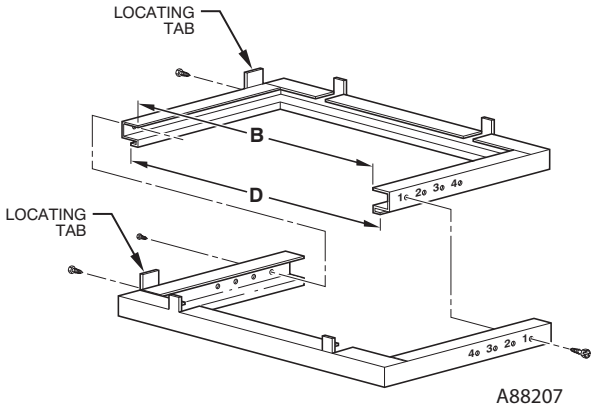

Disassembled

986TB

DIMENSIONS (IN. / MM)						
FURNACE CASING WIDTH	FURNACE IN DOWNFLOW APPLICATION	PLENUM OPENING*		FLOOR OPENING		HOLE NO. FOR WIDTH ADJUSTMENT
		A	B	C	D	
17–1/2 (444.5)	Furnace with or without Cased Coil Assembly or Coil Box	15–1/8 (384.2)	19 (482.6)	16–3/4 (425.5)	20–3/8 (517.5)	3
21 (533.4)	Furnace with or without Cased Coil Assembly or Coil Box	18–5/8 (396.4)	19 (482.6)	20–1/4 (514.4)	20–3/8 (517.5)	2
24–1/2 (622.3)	Furnace with or without Cased Coil Assembly or Coil Box	22–1/8 (562.0)	19 (482.6)	23–3/4 (603.3)	20–3/8 (517.5)	1

*The plenum should be constructed 1/4–in. (6 mm) smaller in width and depth than the plenum dimensions shown above.

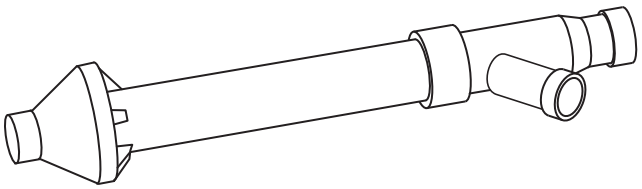

Concentric Vent Kit

A93086

A concentric vent kit allows vent and combustion-air pipes to terminate through a single exit in a roof or side wall. One pipe runs inside the other allowing venting through the inner pipe and combustion air to be drawn in through the outer pipe.

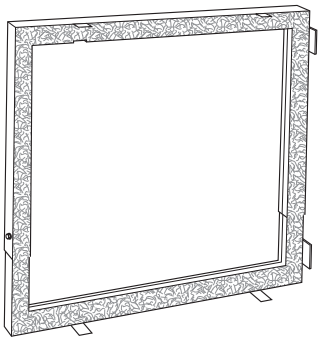

Downflow Subbase

A88202

One base fits all furnace sizes. The base is designed to be installed between the furnace and a combustible floor when no coil box is used or when a coil box other than a Bryant cased coil is used. It is CSA design certified for use with Bryant branded furnaces when installed in downflow applications.

MEDIA FILTER CABINET

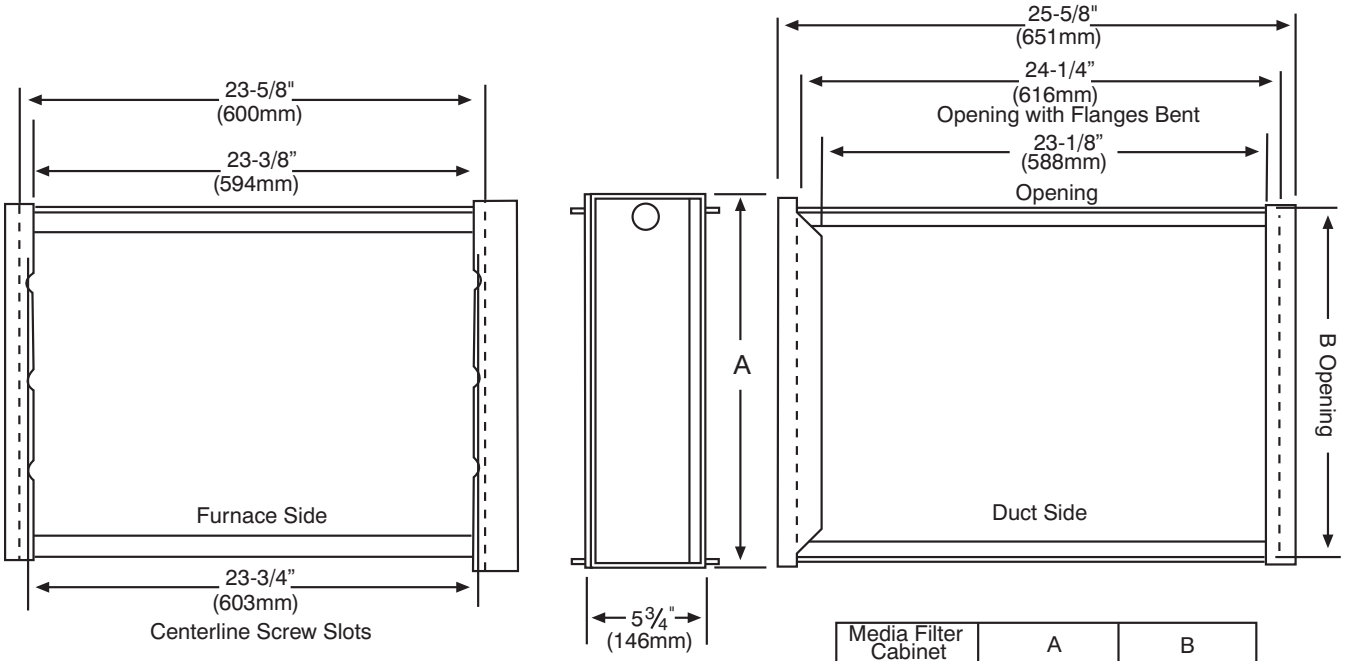

Media Filter Cabinet	A	B
16" (406mm)	17" (432mm)	16" (406mm)
20" (508mm)	21" (533mm)	20" (508mm)
24" (610mm)	25" (635mm)	24" (610mm)

NOTE: Media cabinet is matched to the bottom opening on furnace. May also be used for side return.

A12428

986TB

TYPICAL WIRING SCHEMATIC

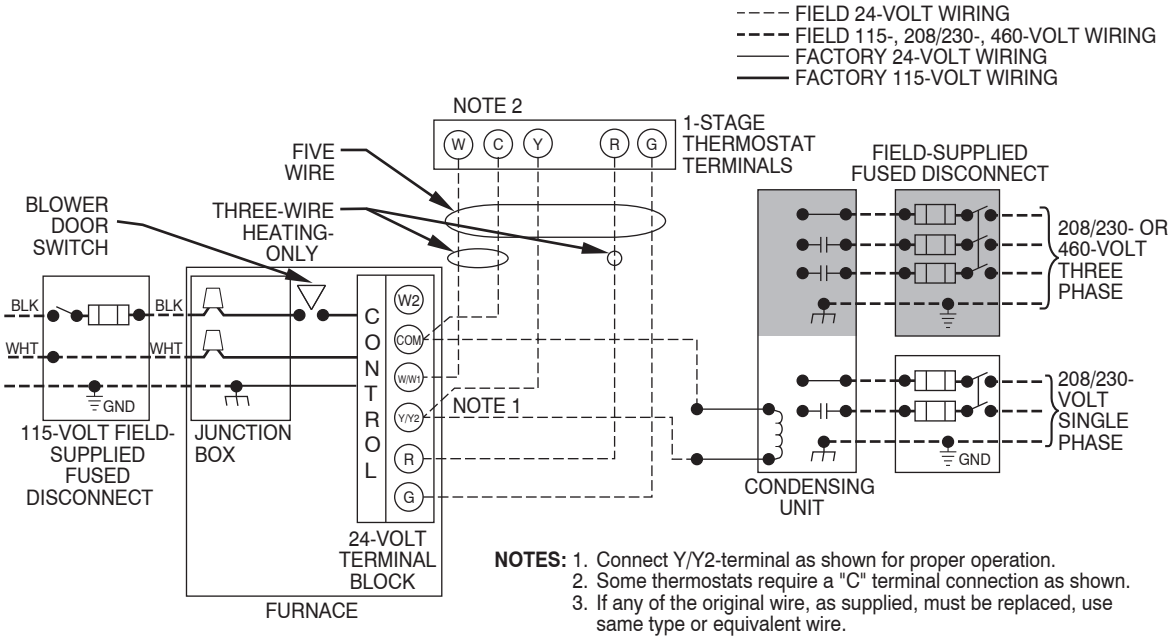

A11401

DIMENSIONAL DRAWING

NOTES:
1. Doors may vary by model.
2. Minimum return-air openings at furnace, based on metal duct. If flex duct is used, see flex duct manufacturer's recommendations for equivalent diameters.
   a. For 800 CFM-16-in. (406 mm) round or 14 1/2 x 12-in. (368 x 305 mm) rectangle.
   b. For 1200 CFM-20-in. (508 mm) round or 14 1/2 x 19 1/2-in. (368 x 495 mm) rectangle.
   c. For 1600 CFM-22-in. (559 mm) round or 14 1/2 x 22 1/16-in. (368 x 560mm) rectangle.
   d. Return air above 1800 CFM at 0.5 in. w.c. ESP on 24.5" casing, requires one of the following configurations: 2 sides, 1 side and a bottom or bottom only. See Air Delivery table in this document for specific use to allow for sufficient airflow to the furnace.
3. Vent and Combustion air pipes through blower compartment must use accessory "Vent Kit - Through the Cabinet". See accessory list for current part number.

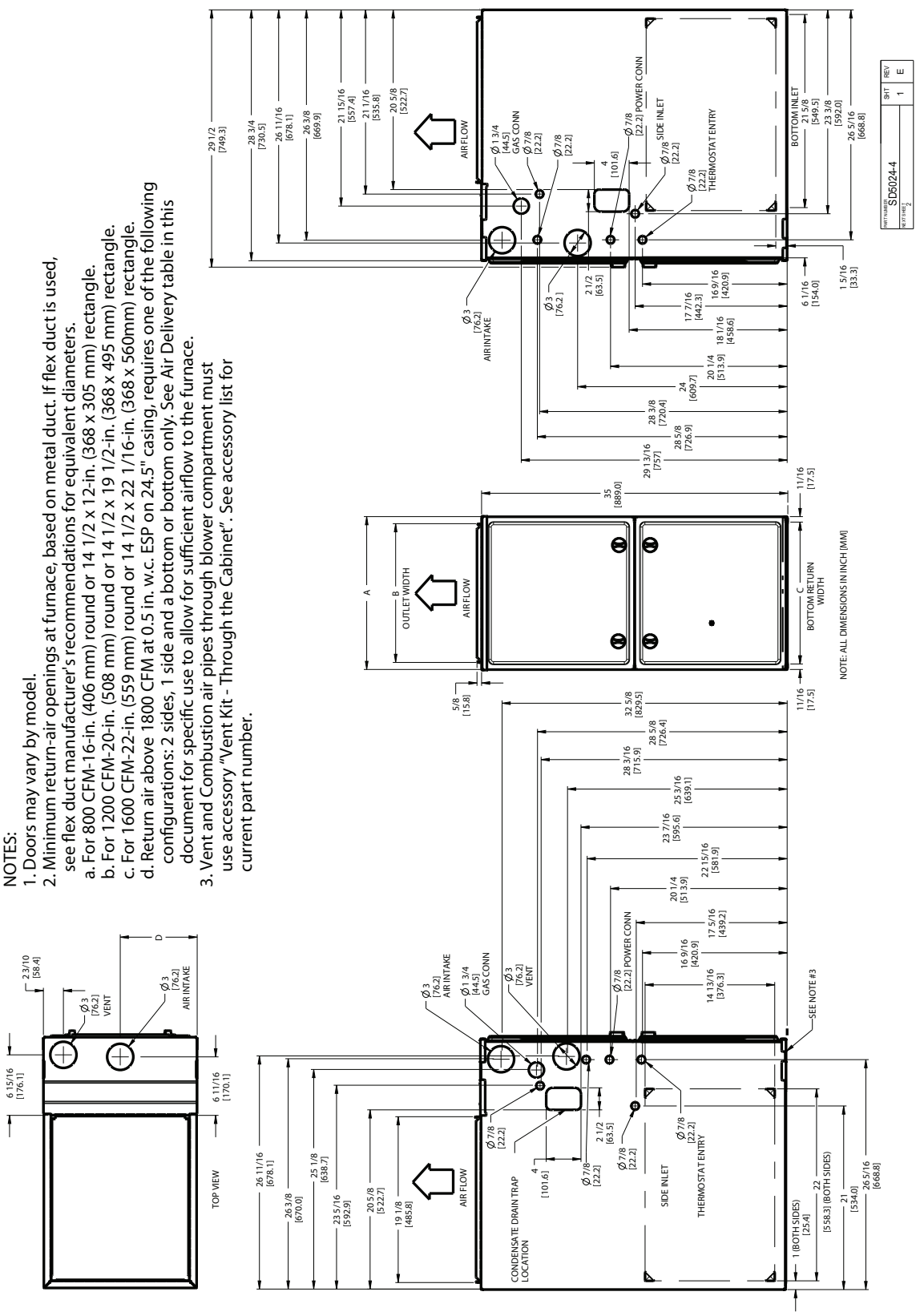

A12267

986TB FURNACE SIZE	A CABINET WIDTH	B OUTLET WIDTH	C BOTTOM INLET WIDTH	D AIR INTAKE	SHIP WT. LB (KG)
42060	17 – 1/2 (445)	15 – 7/8 (403)	16 (406)	8 – 3/4 (222)	140.0 (63.0)
42080					150.0 (67.5)
60080	21 (533)	19 – 3/8 (492)	19 – 1/2 (495)	10 – 1/2 (267)	154.5 (70.2)
66100					164.5 (74.0)
66120	24 – 1/2 (622)	22 – 7/8 (581)	23 (584)	12 – 1/4 (311)	188.5 (84.8)

GUIDE SPECIFICATIONS

General

System Description

Furnish a _____ 4-way multipoise two-stage gas-fired condensing furnace for use with natural gas or propane (factory- authorized conversion kit required for propane); furnish external media cabinet for use with accessory media filter or standard filter.

Quality Assurance

Unit will be designed, tested and constructed to the current ANSI Z 21.47/CSA 2.3 design standard for gas-fired central furnaces.

Unit will be third party certified by CSA to the current ANSI Z 21.47/CSA 2.3 design standard for gas-fired central furnaces. Unit will carry the CSA Blue Star® and Blue Flame® labels. Unit efficiency testing will be performed per the current DOE test procedure as listed in the Federal Register.

Unit will be certified for capacity and efficiency and listed in the latest AHRI Consumer's Directory of Certified Efficiency Ratings.

Unit will carry the current Federal Trade Commission Energy Guide efficiency label.

Delivery, Storage, and Handling

Unit will be shipped as single package only and is stored and handled per unit manufacturer's recommendations.

Warranty (for inclusion by specifying engineer)

U.S. and Canada only. Warranty certificate available upon request.

Equipment

Blower Wheel and ECM Blower Motor

Galvanized blower wheel shall be centrifugal type, statically and dynamically balanced. Blower motor of ECM type shall be permanently lubricated with sealed ball bearings, of _____hp, and have infinitely variable speed from 300-1300 RPM operating only when motor inputs are provided. Blower motor shall be direct drive and soft mounted to the blower housing to reduce vibration transmission.

Filters

Furnace shall have reusable-type filters. Filter shall be _____ in. (mm) X _____ in. (mm). An accessory highly efficient Media Filter is available as an option. _____ Media Filter.

Casing

Casing shall be of .030 in. thickness minimum, pre-painted galvanized steel.

Draft Inducer Motor

Draft Inducer motor shall be two-speed PSC design.

Primary Heat Exchangers

Primary heat exchangers shall be 3-Pass corrosion-resistant aluminized steel of fold-and-crimp sectional design and applied operating under negative pressure.

Secondary Heat Exchangers

Secondary heat exchangers shall be of a stainless steel flow-through of fin-and-tube design and applied operating under negative pressure.

Controls

Controls shall include a micro-processor-based integrated electronic control board with at least 16 service troubleshooting codes displayed via diagnostic flashing LED light on the control, a self-test feature that checks all major functions of the furnace, and a replaceable automotive-type circuit protection fuse. Multiple operational settings available, including separate blower speeds for low heat, high heat, low cooling, high cooling and continuous fan. Continuous fan speed may be adjusted from the thermostat. Cooling airflow will be selectable between 325 to 400 CFM per ton of air conditioning. Features will also include temporary reduced airflow in the cooling mode for improved dehumidification when an Evolution Control or TP-PRH edge® is selected as the thermostat.

Operating Characteristics

Heating capacity shall be _____ Btuh input; _____ Btuh output capacity.

Fuel Gas Efficiency shall be _____ AFUE.

Air delivery shall be _____ cfm minimum at 0.50 in. W.C. external static pressure.

Dimensions shall be: depth_____in. (mm); width _____in. (mm); height_____in. (mm) (casing only). Height shall be _____in. (mm) with A/C coil and _____in. (mm) overall with plenum.

Electrical Requirements

Electrical supply shall be 115 volts, 60 Hz, single-phase (nominal). Minimum wire size shall be _____AWG; maximum fuse size of HACR-type designated circuit breaker shall be _____ amps.

Special Features

Refer to section of the product data identifying accessories and descriptions for specific features and available enhancements.

©2013 Bryant Heating & Cooling Systems ● 7310 W. Morris St. ● Indianapolis, IN 46231 Edition Date: 08/13 **Catalog No. PDS986TB−01**

Manufacturer reserves the right to discontinue, or change at any time, specifications or designs without notice and without incurring obligations. Replaces: NEW