987TA

Evolution® Two-Stage, Variable Speed, 4-Way Multipoise, Condensing Gas Furnace

Product Data

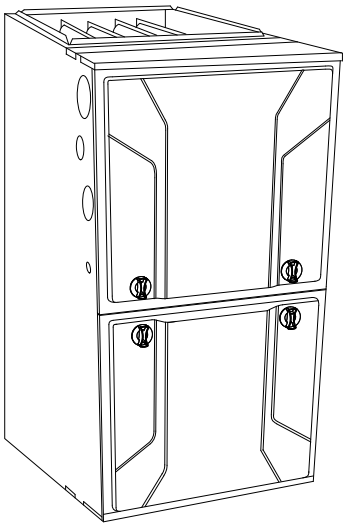

Representative drawing only. Some product models may vary.

WARNING

CARBON MONOXIDE POISONING AND FIRE HAZARD

Failure to follow this warning could result in personal injury, death, and/or property damage.

This furnace is not designed for use in recreation vehicles, manufactured (mobile) homes or outdoors.

Failure to follow this warning could result in personal injury, death, and/or property damage.

The 987TA Multipoise Evolution® two-stage condensing gas furnace features a variable speed constant airflow ECM motor. The Perfect Heat Technology® two-stage gas system is at the heart of the comfort provided by this furnace, along with the Evolution variable-speed constant airflow ECM blower motor, and two-speed inducer motor. With an Annual Fuel Utilization Efficiency (AFUE) of up to 97%, the Evolution two-stage gas furnace provides exceptional savings when compared to a standard furnace. This Evolution Gas Furnace also features 4-way multipoise installation flexibility, and is available in five model sizes. The 987TA can be vented for direct vent/two-pipe, ventilated combustion air, or single--pipe applications. A Bryant® Connex™ and Evolution® Air Conditioner or Heat Pump can be used to form a complete Evolution® System. All sizes can be installed in air quality management districts with a 40 ng/J NOx emissions requirement. All sizes are design certified in Canada.

APPLICATIONS

- Self-diagnostics and extended diagnostic data through the Advanced Product Monitor (APM) accessory or Evolution Connex™ Interface.
- Propane convertible with gas conversion accessory
- Convenient Air Purifier and Humidifier connections.
- Compatible with single- and multiple-zone Evolution systems.

PERFORMANCE

- Communicating variable-speed, constant airflow (VCA) ECM blower motor for electrically efficient operation all year long in heating, cooling and continuous fan operation
- Two-speed inducer motor, and two-stage gas valve.
- PerfectLight™ Silicon Nitride Hot Surface Igniter.
- Perfect Humidity® technology for unmatched dehumidification performance.
- Integral part of the Perfect Humidity® System Technology.
- Fan On Plus™ technology allows control of continuous fan speed from a compatible thermostat.
- SmartEvap™ technology helps control humidity levels in the home when used with a compatible humidity control system.
- On-board NFC antenna makes setup a tap away when using the Bryant® Service Technician App.
- 3-digit display shows fault codes and furnace status.
- RAT and SAT thermistors can provide temperature rise.
- Aluminized-steel primary heat exchanger.
- Stainless-steel condensing secondary heat exchanger.
- Fully-insulated casing including blower section.

INSTALLATION FLEXIBILITY

- 4-way multipoise design for upflow, downflow or horizontal installation, with unique vent elbow and optional through- the-cabinet downflow venting capability.
- Ideal height 35-in. (889 mm) cabinet: short enough for taller coils, but still allows enough room for service.
- Direct-vent/sealed combustion, single-pipe venting or ventilated combustion air.

CERTIFICATIONS

All sizes meet ENERGY STAR® Version 4.1 criteria for gas furnaces: 95%+ AFUE.Cabinet air leakage less than 2.0% at 1.0 in. w.c. and cabinet air leakage less than 1.4% at 0.5 in. w.c. when tested in accordance with ASHRAE standard 193.

LIMITED WARRANTY *

- Default 5-year parts limited warranty
- Default 20-year heat exchanger limited warranty
  - * 10-year parts and lifetime limited heat exchanger warranty with timely registration
  - * Equipment must be registered within 90 days of original installation, except in jurisdictions where warranty benefits cannot be conditioned on registration.
- * Applies to original purchaser/homeowner and not available to subsequent owners. See warranty certificate for complete details and restrictions, including warranty coverage of other applications.

DIMENSIONAL DRAWING

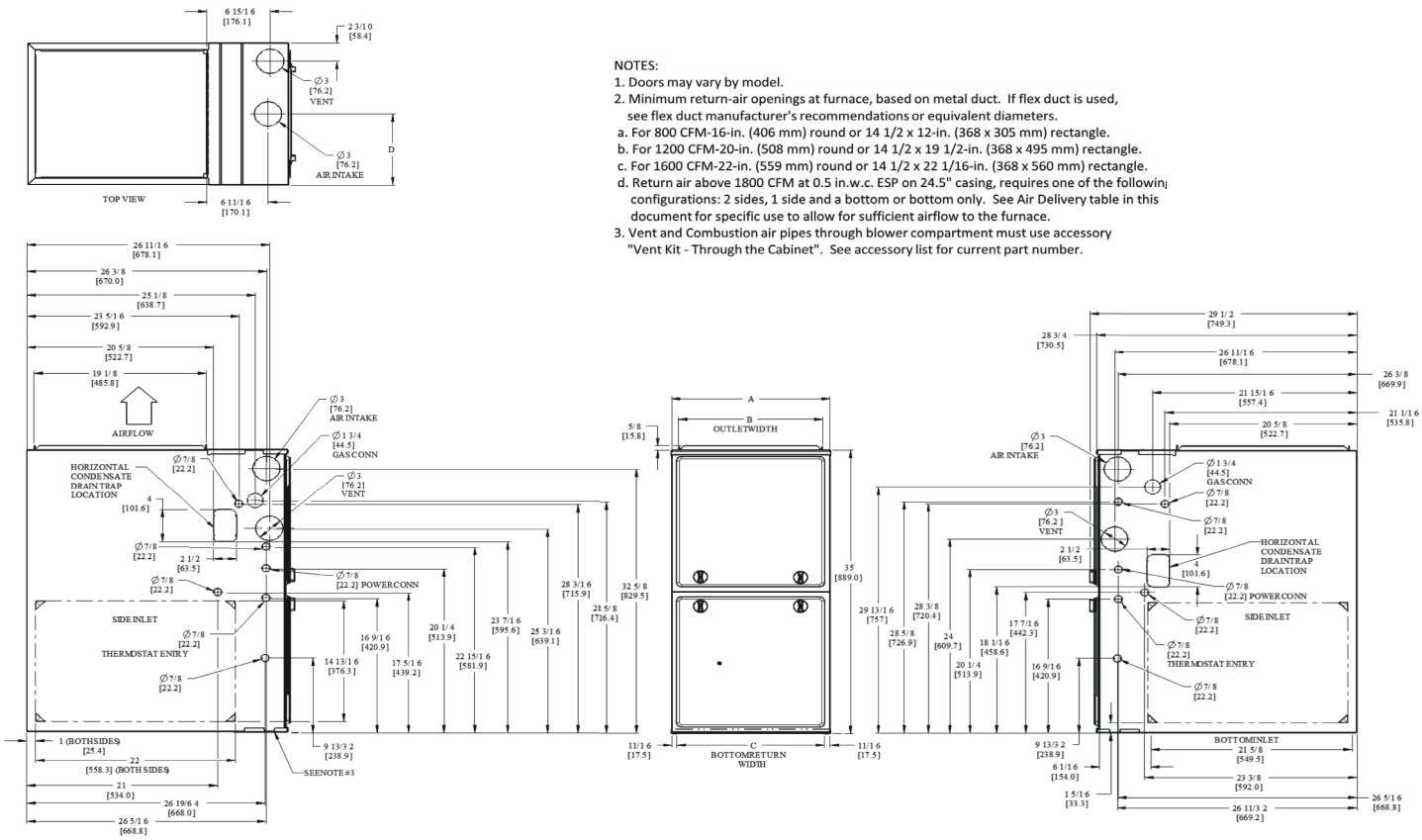

NOTES:
1. Doors may vary by model.
2. Minimum return-air openings at furnace, based on metal duct. If flex duct is used, see flex duct manufacturer's recommendations or equivalent diameters.
   a. For 800 CFM-16-in. (406 mm) round or 14 1/2 x 12-in. (368 x 305 mm) rectangle.
   b. For 1200 CFM-20-in. (508 mm) round or 14 1/2 x 19 1/2-in. (368 x 495 mm) rectangle.
   c. For 1600 CFM-22-in. (559 mm) round or 14 1/2 x 22 1/16-in. (368 x 560 mm) rectangle.
   d. Return air above 1800 CFM at 0.5 in.w.c. ESP on 24.5" casing, requires one of the following configurations: 2 sides, 1 side and a bottom or bottom only. See Air Delivery table in this document for specific use to allow for sufficient airflow to the furnace.
3. Vent and Combustion air pipes through blower compartment must use accessory "Vent Kit - Through the Cabinet". See accessory list for current part number.

NOTE: ALL DIMENSIONS IN INCH (MM)

SD5603-4 REV.-

ISO 9001 Quality

Use of the AHRI Certified TM Mark indicates a manufacturer's participation in the program. For verification of certification for individual products, go to www.ahridirectory.org .

Table 1 – Dimensions

FURNACE SIZE	A	B	C	D	SHIP WT. LB (KG)
	CABINET WIDTH	OUTLET WIDTH	BOTTOM INLET WIDTH	AIR INTAKE	
48060C17	17-1/2 (445)	15-7/8 (403)	16 (406)	8-3/4 (222)	143 (64.6)
48080C17	17-1/2 (445)	15-7/8 (403)	16 (406)	8-3/4 (222)	145 (65.5)
60080C21	21 (533)	19-3/8 (492)	19-1/2 (495)	10-1/2 (267)	157 (71.0)
66100C21	21 (533)	19-3/8 (492)	19-1/2 (495)	10-1/2 (267)	167 (75.7)
66120C24	24-1/2 (622)	22-7/8 (581)	23 (584)	12-1/4 (311)	188 (85.0)

MODEL NUMBER NOMENCLATURE

1 Heat Exchanger	2 Tier/NOx	3 AFUE/NOx	4 Heating Stages	5 Major Series	6, 7 Cooling Capacity (CFM)	8 - 10 Heat Input	11 Motor Type	12 - 13 Width	14 Voltage (1-phase)	15 Un-used	16 Minor Series
9	8	6	T	D	42	060	C	17	A	-	A
8 = 80% 9 = 90+%	0 = Base 1 = Legacy Line 2 = Preferred 3 = Ultra Low Nox 8 = Evolution	0 = 80% 1 = 80% Low NOx (Not Ultra Low NOx) 2 = 92% 5 = 95% 6 = 96% 7 = 97% 8 = 98%	M = Modulating T = Two Stage S = Single Stage C = Single Stage Communicating	A B C D ---	24 = 800 CFM 30 = 1000 CFM 36 = 1200 CFM 42 = 1400 CFM 48 = 1600 CFM 60 = 2000 CFM 66 = 2200 CFM	026 = 26,000 BTU/h 040 = 40,000 BTU/h 060 = 60,000 BTU/h 155 = 155,000 BTU/h	C = Constant Airflow Variable- Speed (VCA) ECM V = Variable-Speed (VCT) PWM M = Multi 18-Speed Constant Torque (MCT) ECM	14 = 14.2" 17 = 17.5" 21 = 21.0" 24 = 24.5"	A = 110V/60Hz B = 230V/50Hz	-	A B C ---

IMPORTANT: For California Residents:
For installation in SCAQMD only: This furnace does not meet the SCAQMD Rule 1111 14 ng/J NOx emission limit, and thus is subject to a mitigation fee of up to $450. This furnace is not eligible for the Clean Air Furnace Rebate Program: www.CleanAirFurnaceRebate.com

Table 2 – Minimum Clearances to Combustible Materials

POSITION	CLEARANCE
Rear	0 (0 mm)
Front (Combustion air openings in furnace and in structure)	1 in. (25 mm)
Required for service*	24 in. (610 mm)†
All Sides of Supply Plenum*	1 in. (25 mm)
Sides	0 (0 mm)
Vent	0 (0 mm)
Top of Furnace	1 in. (25 mm)

*. Consult your local building codes
†. Recommended

The furnace should be sized to provide 100 percent of the design heating load requirement plus any margin that occurs because of furnace model size capacity increments. None of the furnace model sizes can be used if the heating load is 20,000 BTU or lower. Use Air Conditioning Contractors of America (Manual J and S); American Society of Heating, Refrigerating, and Air-Conditioning Engineers; or other approved engineering method to calculate heating load estimates and select the furnace. Excessive oversizing of the furnace may cause the furnace and/or vent to fail prematurely, customer discomfort and/or vent freezing.

Failure to follow these guidelines is considered faulty installation and/or misapplication of the furnace; and resulting failure, damage, or repairs may impact warranty coverage.

FURNACE COMPONENTS

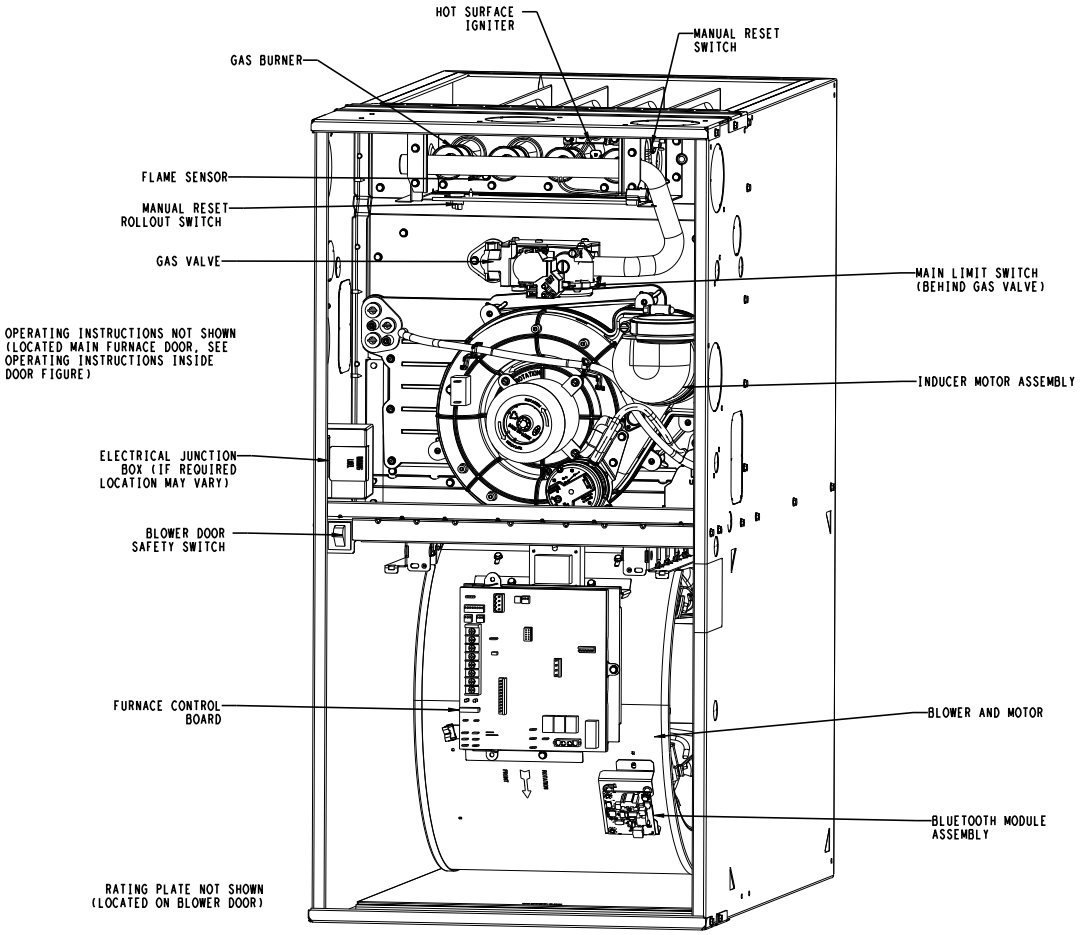

Table 3 – SPECIFICATIONS

UNIT SIZE			48060C17	48080C17	60080C21	66100C21	66120C24
HEATING AND CAPACITY AND EFFICIENCY							
INPUT BTUH*	High Heat	(BTUH)	60,000	80,000	80,000	100,000	120,000
	Low Heat	(BTUH)	39,000	52,000	52,000	65,000	78,000
OUTPUT CAP (BTUH)†	High Heat	(BTUH)	58,000	77,000	76,000	97,000	116,000
	Low Heat	(BTUH)	38,000	50,000	50,000	63,000	75,000
CERTIFIED TEMPERATURE RISE RANGE - °F (°C)		High Heat	40 - 70 (22 - 39)	40 - 70 (22 - 39)	40 - 70 (22 - 39)	40 - 70 (22 - 39)	40 - 70 (22 - 39)
		Low Heat	25 - 55 (14 - 31)	25 - 55 (14 - 31)	25 - 55 (14 - 31)	30 - 60 (17 - 33)	30 - 60 (17 - 33)
AFUE†		Upflow	97.0	97.0	97.0	97.0	97.0
		Downflow	95	95	95	95	95
		Horizontal	96.3	96.2	96.7	96.2	96.7
AIRFLOW CAPACITY AND BLOWER DATA							
Rated Certified External Static Pressure, in. w.c.		Heating	0.12	0.15	0.15	0.2	0.2
		Cooling	0.5	0.5	0.5	0.5	0.5
Airflow CFM @ Rated ESP (CFM)‡		High Heat	1025	1305	1305	1665	2115
		Low Heat	935	1150	1150	1330	1575
		Cooling	1575	1640	2000	2170	2190
Cooling Capacity (CFM/tons)		400	3.5	4	5	5	5.5
		350	4.5	4.5	5.5	6	6
Direct Drive Motor Type			Electronically Commutated Motor (ECM)				
Direct Drive Motor HP			3/4	3/4	1	1	1
Motor Full Load Amps			8.8	9.2	11.5	11.5	11.0
RPM Range			300 - 1300				
Heating Blower Control (Htg Off-Delay)			Adjustable: 90, 120 (factory set), 150, 180 seconds				
Cooling Blower Control (TD Relay)			Adjustable: 90 (factory-set), 5, 30, 60 seconds				
Blower Wheel Dia x Width - In. (mm)			11 x 8	11 x 8	11 x 10	11 x 10	11 x 11
Air Filtration System			Field Supplied Filter				
Filter used for Certified Watt Data			325531-40**				
ELECTRICAL DATA							
Input voltage		V-Hz-Ph	115-60-1				
Operating Voltage Range		Min-Max	104-127				
Maximum Unit Amps			10.1	10	13.1	13.2	11.9
Unit Ampacity			13.5	13.4	17.3	17.4	15.7
Maximum Wire Length							
Measure 1 way in Ft		Feet	27	27	33	33	36
(M)		Meters	8.2	8.2	10.1	10.1	11
Minimum Wire Size		AWG	14	14	12	12	12
Max. Fuse/Circuit Brkr Size (TD Type Recommended)		Amps	15	15	20	20	20
Transformer Capacity (24 VAC output)			40VA				
External Control Power Available		Heating	24VA				
		Cooling	35VA				
GAS CONTROLS							
Burners			3	4	4	5	6
Gas Connection Size			1/2in. NPT				
Gas Valve (Redundant)		Mfr	WhiteRodgers™				
Min. inlet pressure		(in.w.c.)	4.5 (Natural Gas)				
Max. inlet pressure		(in.w.c.)	13.6 (Natural Gas)				
Manufactured (Mobile Home Kit)			See Accessory Listing				
Ignition Device			Silicon Nitride				
Factory installed orifice			44	44	44	44	44
CONNECTIONS							
Communication System			Evolution®; Evolution® Zoning				
Thermostat Connections			R, W/W1, W2, Y/Y2, Y1, G Com 24V, DHUM				
Accessory Connections			EAC-1 (115 VAC); HUM (24 VAC); 1-STG AC (via Y/Y2); 2-STG AC (via Y/Y2 and Y1)				

*. Gas input ratings are certified for elevations to 2000 ft. (610 M). In USA, For elevations above 2000 ft (610 M), reduce ratings 4 percent for each 1000 ft (305 M) above sea level. Refer to National Fuel Gas Code NFPA 54/ANSI Z223.1 Table F.4 or furnace installation instructions.

†. Capacity in accordance with U.S. Government DOE test procedures.

‡. Airflow shown is for bottom only return-air supply for the as-shipped speed tap. For air delivery above 1800 CFM, see Air Delivery table for other options. A filter is required for each return-air supply. An airflow reduction of up to 7 percent may occur when using the factory-specified 4-5/16-in. (110 mm) wide, high efficiency media filter.

**. See Accessory List for part numbers available.

Air Delivery (CFM) with Filter

Table 4 – 48060C17 Airflow in CFM

Setting	ESP (in.w.c.)									
	0.1	0.2	0.3	0.4	0.5	0.6	0.7	0.8	0.9	1
1*	450									
2	488									
3	525									
4	555									
5	600				†					
6	650									
7	700									
8	740									
9	800									
10	875									
11	925									
12	975									
13‡	1000									
14	1050									
15	1138									
16	1200									
17	1225									
18	1300									
19**	1400								1375	1340
20	1480						1450	1415	1375	1340
21	1600			1555	1525	1490	1450	1415	1375	1340
Constant Fan Airflow (cfm)	Settings 1 - 9 (*450 - 800 cfm)									
	Settings above 9 are not recommended									

	Heat Stage	
Setting	Low	High
Comfort 1	710	820
Comfort 2††	795	898
Efficiency 1	897	984
Efficiency 2	958	1100

*. Constant fan default
†. Operation in this range is not recommended because high heat operation will exceed 1.0" w.c. ESP.
‡. Low cooling default
**. High cooling default
††. Heating default

Table 5 – 48080C17 Airflow in CFM

Setting	ESP (in.w.c.)									
	0.1	0.2	0.3	0.4	0.5	0.6	0.7	0.8	0.9	1
1*	450									
2	488									
3	525									
4	555									
5	600				†					
6	650									
7	700									
8	740									
9	800									
10	875									
11	925									
12	975									
13‡	1000									
14	1050									
15	1138									
16	1200									
17	1225									
18	1300									
19**	1400									1375
20	1480							1460	1415	1375
21	1600				1585	1540	1500	1460	1415	1375
Constant Fan Airflow (cfm)	Settings 1 - 4 (*450 - 555 cfm)									
	Settings above 4 are not recommended									

	Heat Stage	
Setting	Low	High
Comfort 1	888	1062
Comfort 2††	1009	1160
Efficiency 1	1111	1255
Efficiency 2	1111	1408

*. Constant fan default
†. Operation in this range is not recommended because high heat operation will exceed 1.0" w.c. ESP.
‡. Low cooling default
**. High cooling default
††. Heating default

Table 6 – 60080C21 Airflow in CFM

Setting	ESP (in.w.c.)									
	0.1	0.2	0.3	0.4	0.5	0.6	0.7	0.8	0.9	1
1*	650									
2	700									
3	740				†					
4	800									
5	875									
6	925									
7	975									
8	1000									
9	1050									
10	1138									
11	1200									
12	1225									
13‡	1300									
14	1400									
15	1480									
16	1600									
17	1625									
18**	1750									
19	1850									
20	1910									1880
21	2000							1965	1925	1880
Constant Fan Airflow (cfm)	Settings 1 - 6 (*650 - 925 cfm)									
	Settings above 6 are not recommended									

Setting	Heat Stage	
	Low	High
Comfort 1	853	1032
Comfort 2††	950	1122
Efficiency 1	1100	1250
Efficiency 2	1100	1390

*. Constant fan default
†. Operation in this range is not recommended because high heat operation will exceed 1.0" w.c. ESP.
‡. Low cooling default
**. High cooling default
††. Heating default

Table 7 – 66100C21 Airflow in CFM

Setting	ESP (in.w.c.)									
	0.1	0.2	0.3	0.4	0.5	0.6	0.7	0.8	0.9	1
1*	650									
2	700									
3	740									
4	800									
5	875				†					
6	925									
7	975									
8	1000									
9	1050									
10	1138									
11	1200									
12	1225									
13	1300									
14‡	1400									
15	1480									
16	1600									
17	1625									
18	1750									
19	1850									
20**	1910									1865
21	2000							1950	1910	1865
22	2110				2075	2040	2000	1950	1910	1865
Constant Fan Airflow (cfm)	Settings 1 - 9 (*650 - 1050 cfm)									
	Settings above 9 are not recommended									

Setting	Heat Stage	
	Low	High
Comfort 1	1011	1356
Comfort 2††	1119	1489
Efficiency 1	1280	1616
Efficiency 2	1400	1820

*. Constant fan default
†. Operation in this range is not recommended because high heat operation will exceed 1.0" w.c. ESP.
‡. Low cooling default
**. High cooling default
††. Heating default

Table 8 – 66120C24 Airflow in CFM

Setting	ESP (in.w.c.)									
	0.1	0.2	0.3	0.4	0.5	0.6	0.7	0.8	0.9	1
1*	650									
2	700									
3	740									
4	800									
5	875									
6	925									
7	975									
8	1000									
9	1050				†					
10	1138									
11	1200									
12	1225									
13‡	1300									
14	1400									
15	1480									
16	1600									
17	1625									
18**	1750									
19	1850									
20	1910									1860
21	2000							1960	1910	1860
22	2110					2065	2015	1960	1910	1860
Constant Fan Airflow (cfm)	Settings 1 - 3 (*650 - 740 cfm)									
	Settings above 3 are not recommended									

	Heat Stage	
Setting	Low	High
Comfort 1	1185	1682
Comfort 2††	1330	1851
Efficiency 1	1495	2014
Efficiency 2	1495	2110

*. Constant fan default
†. Operation in this range is not recommended because high heat operation will exceed 1.0" w.c. ESP.
‡. Low cooling default
**. High cooling default
††. Heating default

TYPICAL WIRING SCHEMATIC

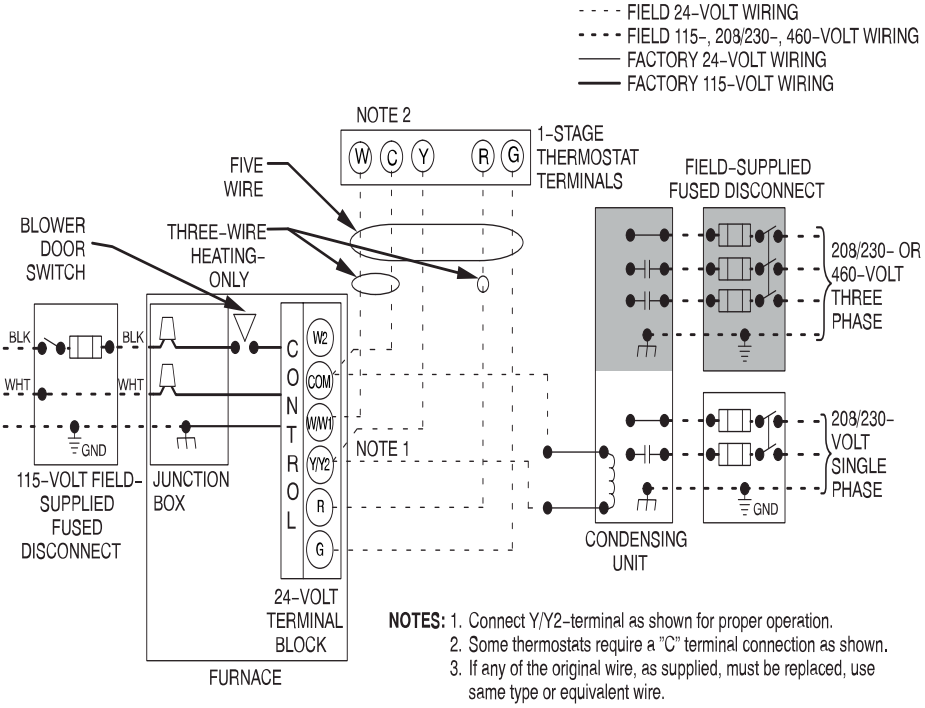

FURNACE CONTROL BOARD

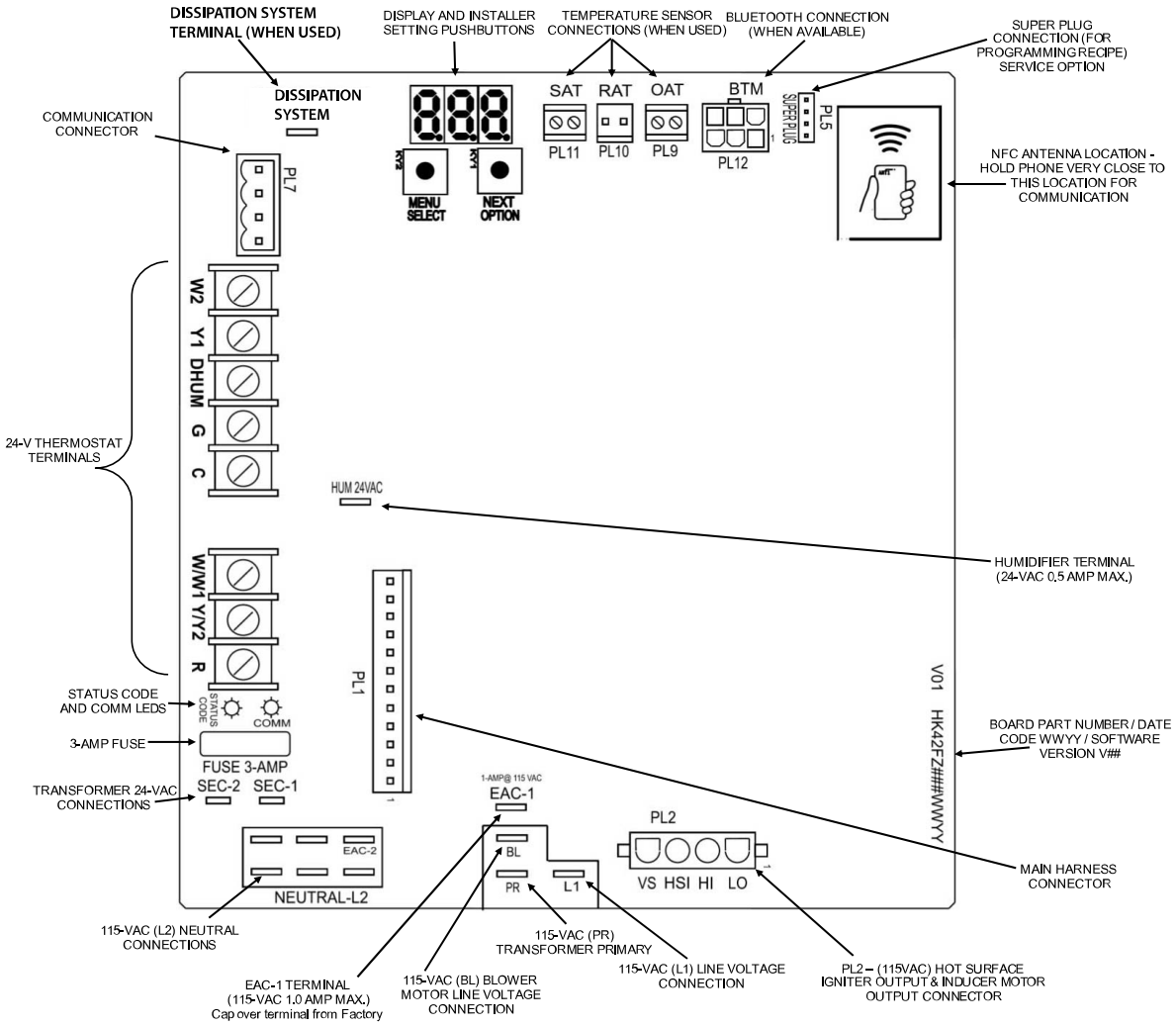

MAXIMUM ALLOWABLE EXPOSED VENT LENGTHS INSULATION TABLE

Maximum Allowable Exposed Vent Length in Unconditioned Space - Ft.

Winter Design Temp °F	Unit Size	60,000 BTUH											
		Uninsulated				3/8-in. Insulation				1/2-in. Insulation			
	Pipe Dia. in.	1 ½	2	2 ½	3	1 ½	2	2 ½	3	1 ½	2	2 ½	3
	20	20	30	30	25	20	75	65	60	20	85	75	65
	0	15	15	10	10	20	40	30	25	20	45	40	30
	-20	10	5			20	25	20	15	20	30	25	20
	-40	5				20	15	15	10	20	20	15	10

Winter Design Temp °F	Unit Size	80,000 BTUH														
		Uninsulated					3/8-in. Insulation					1/2-in. Insulation				
	Pipe Dia. in.	1 ½	2	2 ½	3	4	1 ½	2	2 ½	3	4	1 ½	2	2 ½	3	4
	20	15	40	40	35	30	15	50	90	75	65	15	50	70	70	70
	0	15	20	15	10	5	15	50	45	35	30	15	50	50	40	35
	-20	15	10	5			15	35	30	20	15	15	40	30	25	15
	-40	10	5				15	25	20	15	5	15	30	25	20	10

Winter Design Temp °F	Unit Size	100,000 BTUH											
		Uninsulated				3/8-in. Insulation				1/2-in. Insulation			
	Pipe Dia. in.	2	2 ½	3	4	2	2 ½	3	4	2	2 ½	3	4
	20	20	50	40	35	20	80	95	80	20	80	105	90
	0	20	20	15	10	20	55	45	35	20	65	55	45
	-20	15	10	5		20	35	30	20	20	45	35	25
	-40	10	5			20	25	20	10	20	30	25	15

Winter Design Temp °F	Unit Size	120,000 BTUH									140,000* BTUH								
		Uninsulated			3/8-in. Insulation			1/2-in. Insulation			Uninsulated			3/8-in. Insulation			1/2-in. Insulation		
	Pipe Dia. in.	2 ½	3	4	2 ½	3	4	2 ½	3	4	2 ½	3	4	2 ½	3	4	2 ½	3	4
	20	10	50	40	10	75	95	10	75	105	5	55	50	5	65	105	5	65	125
	0	10	20	15	10	55	45	10	65	50	5	25	15	5	65	50	5	65	60
	-20	10	10		10	35	25	10	45	30	5	10	5	5	45	30	5	50	40
	-40	10	5		10	25	15	10	30	20	5	5		5	30	20	5	35	25

Maximum Allowable Exposed Vent Length in Unconditioned Space - Meters

Winter Design Temp °C	Unit Size	60,000 BTUH											
		Uninsulated				3/8-in. Insulation				1/2-in. Insulation			
	Pipe Dia. mm	38	51	64	76	38	51	64	76	38	51	64	76
	-7	6.1	9.1	9.1	7.6	6.1	22.9	19.8	18.3	6.1	25.9	22.9	19.8
	-18	4.6	4.6	3.0	3.0	6.1	12.2	9.1	7.6	6.1	13.7	12.2	9.1
	-29	3.0	1.5			6.1	7.6	6.1	4.6	6.1	9.1	7.6	6.1
	-40	1.5				6.1	4.6	4.6	3.0	6.1	6.1	4.6	3.0

Winter Design Temp °C	Unit Size	80,000 BTUH														
		Uninsulated					3/8-in. Insulation					1/2-in. Insulation				
	Pipe Dia. mm	38	51	64	76	102	38	51	64	76	102	38	51	64	76	102
	-7	4.6	12.2	12.2	10.7	9.1	4.6	15.2	27.4	22.9	19.8	4.6	15.2	21.3	21.3	21.3
	-18	4.6	6.1	4.6	3.0	1.5	4.6	15.2	13.7	10.7	9.1	4.6	15.2	15.2	12.2	10.7
	-29	4.6	3.0	1.5			4.6	10.7	9.1	6.1	4.6	4.6	12.2	9.1	7.6	4.6
	-40	3.0	1.5				4.6	7.6	6.1	4.6	1.5	4.6	9.1	7.6	6.1	3.0

Winter Design Temp °C	Unit Size	100,000 BTUH											
		Uninsulated				3/8-in. Insulation				1/2-in. Insulation			
	Pipe Dia. mm	51	64	76	102	51	64	76	102	51	64	76	102
	-7	6.1	15.2	12.2	10.7	6.1	24.4	28.9	24.4	6.1	24.4	32.0	27.4
	-18	6.1	6.1	4.6	3.0	6.1	16.8	13.7	10.7	6.1	19.8	16.7	13.7
	-29	4.6	3.0	1.5		6.1	10.7	9.1	6.1	6.1	13.7	10.7	7.6
	-40	3.0	1.5			6.1	7.6	6.1	3.0	6.1	9.1	7.6	4.6

Winter Design Temp °C	Unit Size	120,000 BTUH									140,000* BTUH								
		Uninsulated			3/8-in. Insulation			1/2-in. Insulation			Uninsulated			3/8-in. Insulation			1/2-in. Insulation		
	Pipe Dia. mm	64	76	102	64	76	102	64	76	102	64	76	102	64	76	102	64	76	102
	-7	3.0	15.2	12.2	3.0	22.9	28.9	3.0	22.9	32.0	1.5	16.7	15.2	1.5	19.8	32.0	1.5	19.8	38.1
	-18	3.0	6.1	4.6	3.0	16.8	13.7	3.0	19.8	15.2	1.5	7.6	4.6	1.5	19.8	15.2	1.5	19.8	18.3
	-29	3.0	3.0		3.0	10.7	7.6	3.0	13.7	9.1	1.5	3.0	1.5	1.5	13.7	9.1	1.5	15.2	12.2
	-40	3.0	1.5		3.0	7.6	4.6	3.0	9.1	6.1	1.5	1.5		1.5	9.1	6.1	1.5	35	7.6

* Not all model families have these sizes

MAXIMUM EQUIVALENT VENT LENGTH

NOTE: *Maximum Equivalent Vent Length (MEVL) includes standard and concentric vent termination and does NOT include elbows. Use Deductions from Maximum Equivalent Vent Length to determine allowable vent length for each application.*

Table 9 – Maximum Equivalent Vent Length

Unit Size		60,000 *				80,000 †					100,000 ‡				120,000		
Altitude (feet)	Pipe Dia. (in)	1 ½	2	2 ½	3	1 ½	2	2 ½	3	4	2	2 ½	3	4	2 ½	3	4
	0-2000	20	100	175	200	15	55	130	175	200	20	80	175	200	10	75	185
	2001-3000		95	165	185	10	49	125	165	185	15	75	165	185		70	175
	3001-4000	16	90	155	175			115	155	175			155	175	5	65	165
	4001-4500	15	85	150	170		44	110	150	165	10	70		170	N/A	60	160
	4501-5000		80	145	165				145	160		65	150	165			
	5001-6000		75	140	155		41	100	135	150			140	155			155
	6001-7000	13	70	130	145	N/A	38	90	125	140		60	135	145		50	140
	7001-8000	10	65	120	135		36		120	125	N/A	55	125	135		46	130
	8001-9000	5	60	115	125		33	80	110	115		50	115	125		43	120
	9001-10000	N/A	55	105	115		30	75	100	105		45	100	115		39	115
Unit Size		**60,000 ***				**80,000 †**					**100,000 ‡**				**120,000**		
Altitude (meters)	Pipe Dia. (mm)	38	51	64	76	38	51	64	76	102	51	64	76	102	64	76	102
	0-610	6.0	30.4	53.3	60.9	4.5	16.7	39.6	53.3	60.9	6.0	24.3	53.3	60.9	3.0	22.8	56.3
	611-914		28.9	50.2	56.3	3.0	14.9	38.1	50.2	56.3	4.5	22.8	50.2	56.3		21.3	53.3
	915-1219	4.8	27.4	47.2	53.3			35.0	47.2	53.3			47.2	53.3	1.5	19.8	50.2
	1220-1370	4.5	25.9	45.7	51.8		13.4	33.5	45.7	50.2	3.0	21.3		51.8	N/A	18.2	48.7
	1371-1524		24.3	44.1	50.2				44.1	48.7		19.8	45.7	50.2			
	1525-1829		22.8	42.6	47.2		12.4	30.4	41.1	45.7			42.6	47.2			47.2
	1830-2134	3.9	21.3	39.6	44.1	NA	11.5	27.4	38.1	42.6		18.2	41.1	44.1		15.2	42.6
	2135-2438	3.0	19.8	36.5	41.1		10.9		36.5	38.1	N/A	16.7	38.1	41.1		14.0	39.6
	2439-2743	1.5	18.2	35.0	38.1		10.0	24.3	33.5	35.0		15.2	35.0	38.1		13.1	36.5
	2744-3048	NA	16.7	32.0	35.0		9.1	22.8	30.4	32.0		13.7	30.4	35.0		11.8	35.0

*. 60K Inducer Outlet Restrictor disk (P/N 337683-401; 1.25-in. (32 mm) diameter - available through Replacement Components) is required in all orientations for installations from 0–2000 ft (0–610 M) above sea level and where TEVL is no greater than 5-ft. (1.5 M).

†. 80K Inducer Outlet Restrictor disk (P/N 337683-401; 1.25-in. (32 mm) diameter - available through Replacement Components) is required in upflow orientation for installations from 0–2000 ft (0–610 M) above sea level and where TEVL is no greater than 5-ft. (1.5 M).

‡. 100K Inducer Outlet Restrictor disk (P/N 337683-402; 1.50-in. (38 mm) diameter - available through Replacement Components) is required in all orientations for installations from 0–2000 ft (0–610 M) above sea level and where TEVL is no greater than 5-ft. (1.5 M).

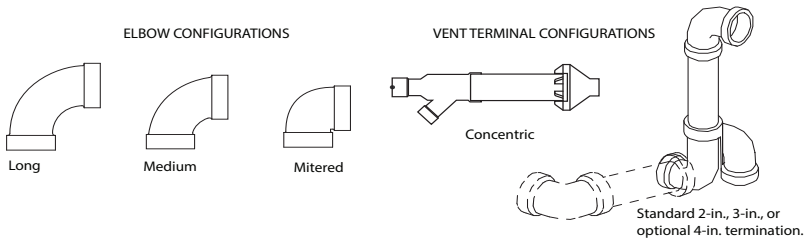

Deductions from Maximum Equivalent Vent Length - Ft. (M)

Pipe Diameter (in):	1-1/2		2		2-1/2		3		4	
Mitered 90º Elbow	8	(2.4)	8	(2.4)	8	(2.4)	8	(2.4)	8	(2.4)
Medium Radius 90º Elbow	5	(1.5)	5	(1.5)	5	(1.5)	5	(1.5)	5	(1.5)
Long Radius 90º Elbow	3	(0.9)	3	(0.9)	3	(0.9)	3	(0.9)	3	(0.9)
Mitered 45º Elbow	4	(1.2)	4	(1.2)	4	(1.2)	4	(1.2)	4	(1.2)
Medium Radius 45º Elbow	2.5	(0.8)	2.5	(0.8)	2.5	(0.8)	2.5	(0.8)	2.5	(0.8)
Long Radius 45º Elbow	1.5	(0.5)	1.5	(0.5)	1.5	(0.5)	1.5	(0.5)	1.5	(0.5)
Tee	16	(4.9)	16	(4.9)	16	(4.9)	16	(4.9)	16	(4.9)
Concentric Vent Termination	NA		0	(0.0)	NA		0	(0.0)	NA	
Standard Vent Termination	0	(0.0)	0	(0.0)	0	(0.0)	0	(0.0)	0	(0.0)

NOTES:

1. Use only the smallest diameter pipe possible for venting. Over-sizing may cause flame disturbance or excessive vent terminal icing or freeze-up.
2. NA - Not allowed. Pressure switch will not close, or flame disturbance may result.
3. Vent sizing for Canadian installations over 4500 ft. (1370 M) above sea level are subject to acceptance by the local authorities having jurisdiction.
4. Size both the combustion air and vent pipe independently, then use the larger size for both pipes.
5. Assume the two 45_ elbows equal one 90_ elbow. Wide radius elbows are desirable and may be required in some cases.
6. Elbow and pipe sections within the furnace casing and at the vent termination should not be included in vent length or elbow count.
7. The minimum pipe length is 5 ft. (2 M) linear feet (meters) for all applications.
8. Use 3-in. (76 mm) diameter vent termination kit for installations requiring 4-in. (102 mm) diameter pipe.
9. A running Tee in the Combustion Air Pipe adds 0 ft. to the TEVL of the vent length.

Venting System Length Calculations

The Total Equivalent Vent Length (TEVL) for **EACH** combustion air or vent pipe equals the length of the venting system, plus the equivalent length of elbows used in the venting system from Maximum Equivalent Vent Length.

Standard vent terminations or factory accessory concentric vent terminations count for zero deduction.

See vent system manufacturer's data for equivalent lengths of flexible vent pipe or other termination systems. **DO NOT ASSUME** that one foot of flexible vent pipe equals one foot of straight PVC/ABS DWV vent pipe.

Compare the Total Equivalent Vent Length to the Maximum Equivalent Vent Lengths Table.

Example 1

A direct-vent 60,000 BTUH furnace installed at 2100 ft. (640M). Venting system includes **FOR EACH PIPE:**

70 feet (22 M) of vent pipe, 65 feet (20 M) of combustion air inlet pipe, (3) 90º long-radius elbows, (2) 45º long-radius elbows, and a factory accessory concentric vent kit.

Can this application use 2" (50 mm ND) PVC/ABS DWV vent piping?

Measure the required linear length of air inlet and vent pipe; insert the longest of the two here					70 ft. (22 M)	Use length of the longer of the vent or air inlet piping system
Add equiv length of (3) 90º long-radius elbows (use the highest number of elbows for either the vent or inlet pipe)	3	x	3 ft. (0.9 M)	=	9 ft. (2.7 M)	From Deductions from Maximum Equivalent Vent Length
Add equiv length of (2) 45º long-radius elbows (use the highest number of elbows for either the vent or inlet pipe)	2	x	1.5 ft. (0.5 M)	=	3 ft. (0.9 M)	From Deductions from Maximum Equivalent Vent Length
Add equiv length of factory concentric vent term					0 ft.	From Deductions from Maximum Equivalent Vent Length
Add correction for flexible vent pipe, if any					0 ft.	From Vent Manufacturer's instructions; zero for PVC/ABS DWV
Total Equivalent Vent Length (TEVL)					82 ft. (25 M)	Add all of the above lines
Maximum Equivalent Vent Length (MEVL)					95 ft. (29 M)	For 2" pipe from Maximum Equivalent Vent Length
Is TEVL less than MEVL?					YES	Therefore, 2" pipe MAY be used

Example 2

A direct-vent 60,000 BTUH furnace installed at 2100 ft. (640M). Venting system includes **FOR EACH PIPE:**

100 feet (30 M) of vent pipe, 95 feet (29 M) of combustion air inlet pipe, (3) 90º long-radius elbows, and a polypropylene concentric vent kit. Also includes 20 feet (6.1 M) of flexible polypropylene vent pipe, included within the 100 feet (30 M) of vent pipe.

VERIFY FROM POLYPROPYLENE VENT MANUFACTURER'S INSTRUCTIONS for the multiplier correction for flexible vent pipe.

Can this application use 60mm o.d. (2") polypropylene vent piping? If not, what size piping can be used?

Measure the required linear length of **RIGID** air inlet and vent pipe; insert the longest of the two here: 100 ft. Of rigid pipe - 20 ft. Of flexible pipe				=	80 ft. (24 M)	Use length of the longer of the vent or air inlet piping system
Add equiv length of (3) 90º long-radius elbows (use the highest number of elbows for either the vent or inlet pipe)	3	x	5 ft. (1.5 M)	=	15 ft. (4.6 M)	Example from polypropylene vent manufacturer's instructions, Verify from vent manufacturer's instructions.
Add equiv length of 45º long-radius elbows (use the highest number of elbows for either the vent or inlet pipe)	0	x		=	0 ft. (0 M)	
Add equiv length of factory concentric vent term	9	x	3.3 ft (0.9 M)	=	30 ft. (9 M)	
Add correction for flexible vent pipe, if any	2*	x	20 ft. (6.1 M)	=	40 ft. (12.2 M)	
* VERIFY FROM VENT MANUFACTURER'S INSTRUCTIONS; For example only, assume 1 meter of flexible 60mm (2") or 80mm (3") polypropylene pipe equals 2.0 meters (6.5 ft.) of PVC/ABS pipe.						
Total Equivalent Vent Length (TEVL)					165 ft. (50 M)	Add all of the above lines
Maximum Equivalent Vent Length (MEVL)					95 ft. (29 M)	For 2" pipe from Maximum Equivalent Vent Length
Is TEVL less than MEVL?					NO	Therefore, 60mm (2") pipe may NOT be used; try 80mm (3")
Maximum Equivalent Vent Length (MEVL)					185 ft. (57 M)	For 3" pipe from Maximum Equivalent Vent Length
Is TEVL less than MEVL?					YES	Therefore, 80mm (3") pipe MAY be used

RETURN AIR TEMPERATURE

This furnace is designed for continuous return-air minimum temperature of 60°F (15°C) db or intermittent operation down to 55°F (13°C) db such as when used with a night setback thermometer. Return-air temperature must not exceed 80°F (27°C) db. Failure to follow these return air limits may affect reliability of heat exchangers, motors and controls.

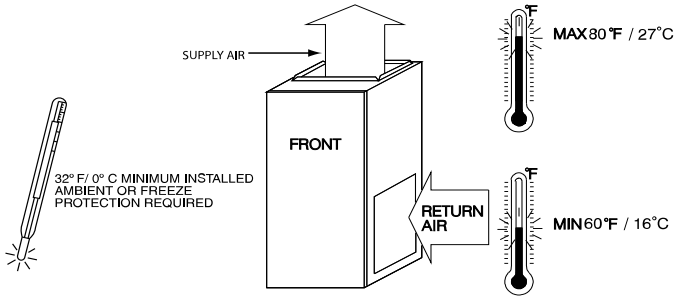

COMBUSTION-AIR PIPE FOR NON-DIRECT (1-PIPE) VENT APPLICATION

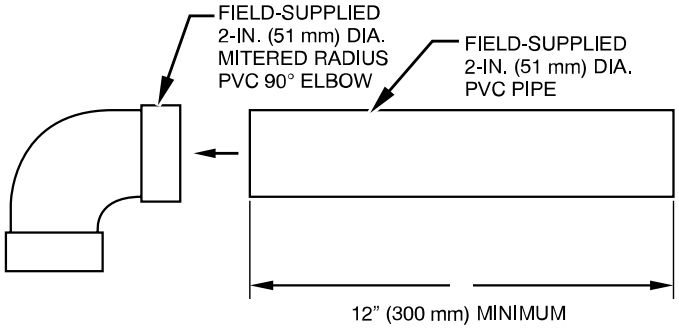

NOTE: See Installation Instructions for specific venting configurations.

DOWNFLOW SUBBASE

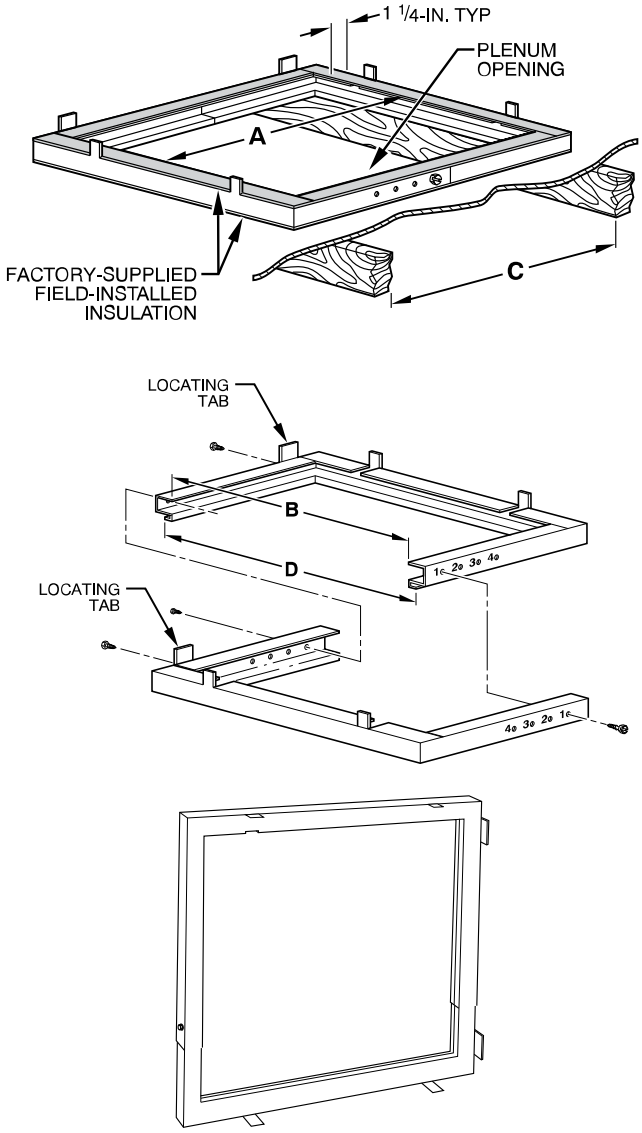

Downflow Subbase

One base fits all furnace sizes. The base is designed to be installed between the furnace and a combustible floor when no coil box is used or when a coil box other than the manufacturer's cased coil is used. It is CSA design certified for use with the manufacturer's branded furnaces when installed in downflow applications.

DIMENSIONS (IN. / MM)						
FURNACE CASING WIDTH	FURNACE IN DOWNFLOW APPLICATION	PLENUM OPENING*		FLOOR OPENING		HOLE NO. FOR WIDTH ADJUSTMENT
		A	B	C	D	
17-1/2 (445)	Furnace with or without Cased Coil Assembly or Coil Box	15-1/8 (384)	19 (483)	16-3/4 (426)	20-5/8 (600)	3
21 (533)	Furnace with or without Cased Coil Assembly or Coil Box	18-5/8 (396)	19 (483)	20-1/4 (514)	20-5/8 (600)	2
24-1/2 (622)	Furnace with or without Cased Coil Assembly or Coil Box	22-1/8 (562)	19 (483)	23-3/4 (603)	20-5/8 (600)	1

*. The plenum should be constructed 1/4-in. (6 mm) smaller in width and depth than the plenum dimensions shown above.

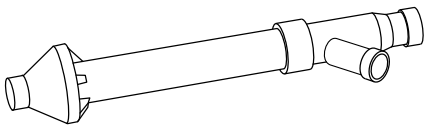

Concentric Vent Kit

A concentric vent kit allows vent and combustion-air pipes to terminate through a single exit in a roof or side wall. One pipe runs inside the other allowing venting through the inner pipe and combustion air to be drawn in through the outer pipe.

MEDIA FILTER CABINET (OPTIONAL ACCESSORY)

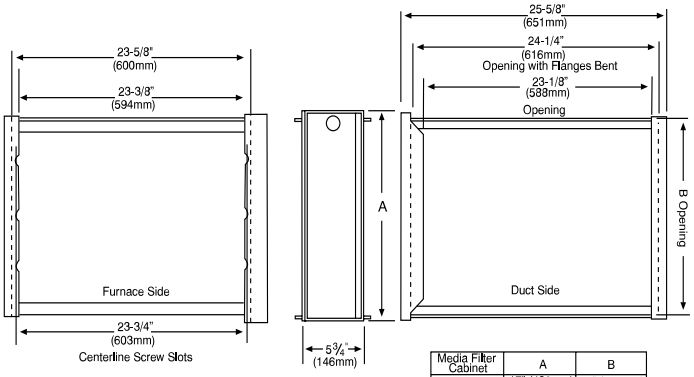

Media Filter Cabinet	A	B
16" (406mm)	17" (432mm)	16" (406mm)
20" (508mm)	21" (533mm)	20" (508mm)
24" (610mm)	25" (635mm)	24" (610mm)

NOTE: Media cabinet is matched to the bottom opening on furnace. May also be used for side return.

ACCESSORIES

DESCRIPTION	ACCESSORY PART NUMBER	42060C17	42080C17	60080C21	66100C21	66120C24
Condensate Neutralizer Kit	P908-0001*	X	X	X	X	X
Gas Valve Tower Port Adapter Kit	92-1003*	X	X	X	X	X
External Filter Rack, 14-1/2" x 25"	ACG1425NCB*	–	–	–	–	–
External Filter Rack, 16" x 25"	ACG1625NCF*	X	X	–	–	–
External Filter Rack, 20" x 25"	ACG2025NCJ*	–	–	X	X	–
External Filter Rack, 24-1/2" x 24"	ACG2424NCL*	–	–	–	–	X
Washable filter, 3/4" x 16" x 25"	325531-402*	X	X	–	–	–
Washable filter, 3/4" x 20" x 25"	325531-403*	–	–	X	X	–
Washable filter, 3/4" x 24" x 25"	325531-404*	–	–	–	–	X
Coil Adapter Kits - No Offset	KGADA0101ALL	X	X	X	X	X
Coil Adapter Kits - Single Offset	KGADA0201ALL	X	X	X	X	X
Coil Adapter Kits - Double Offset	KGADA0301ALL	X	X	X	X	X
Return Air Base (Upflow Applications) 14-3/16" wide	KGARP0301B14	–	–	–	–	–
Return Air Base (Upflow Applications) 17-1/2" wide	KGARP0301B17	X	X	–	–	–
Return Air Base (Upflow Applications) 21" wide	KGARP0301B21	–	–	X	X	–
Return Air Base (Upflow Applications) 24-1/2" wide	KGARP0301B24	–	–	–	–	X
Vent Terminal - Concentric - 2" (51 mm)	KGAVT0701CVT	See Venting Tables				
Vent Terminal - Concentric - 3" (76 mm)	KGAVT0801CVT					
Vent Terminal Bracket - 2" (51 mm)	KGAVT0101BRA					
Vent Terminal Bracket - 3" (76 mm)	KGAVT0201BRA					
Vent Kit - Through the Cabinet	KGADC0101BVC	X	X	X	X	X
Polypropylene Inlet Air Pipe Coupling	KGAAC0101RVC	X	X	X	X	X
Freeze Protect Kit - Condensate Drain Line Tape	KGAHT0101CFP	X	X	X	X	X
Freeze Protect Kit - Condensate Trap with Heat Pad	KGAHT0201CFP	X	X	X	X	X
CPVC to PVC Drain Adapters - 1/2" CPVC to 3/4" PVC	KGAAD0110PVC	X	X	X	X	X
External Trap Kit	KGAET0201ETK	X	X	X	X	X
Horizontal Trap Grommet - Direct Vent	KGACK0101HCK	All 2-Pipe Horizontal				
Downflow Furnace Base Kit for Combustible Floors	KGASB0201ALL	X	X	X	X	X
IAQ Device Duct Adapters 20" IAQ to 16" Side Return	KGAAD0101MEC	20" x 25" IAQ Devices				
IAQ Device Duct Adapters 24" IAQ to 16" Side Return	KGAAD0201MEC	24" x 25" IAQ Devices				
Gas Conversion Kit - Nat to LP†	AGAGC9NPS01E*	X	X	X	X	X
Gas Conversion Kit - LP to Nat†	AGAGC9PNS01E*	X	X	X	X	X
Evolution®; Evolution® Zoning	SYSTXBB	X	X	X	X	X

*. Purchased through Replacement Components
†. Factory-authorized and field installed. Fuel conversion kits are CSA (formerly AGA/CGA) recognized.
X = Accessory

Manufacturer reserves the right to change, at any time, specifications and designs without notice and without obligations.

ACCESSORIES (continued)

DESCRIPTION	ACCESSORY PART NUMBER	
Gas Orifice Kit - #42 (Nat Gas)	LH32DB207	See Installation Instructions for model, altitude, and heat value usages.
Gas Orifice Kit - #43 (Nat Gas)	LH32DB202	
Gas Orifice Kit - #44 (Nat Gas)	LH32DB200	
Gas Orifice Kit - #45 (Nat Gas)	LH32DB205	
Gas Orifice Kit - #46 (Nat Gas)	LH32DB208	
Gas Orifice Kit - #47 (Nat Gas)	LH32DB078	
Gas Orifice Kit - #48 (Nat Gas)	LH32DB076	
Gas Orifice Kit - #54 (LP)	LH32DB203	
Gas Orifice Kit - #55 (LP)	LH32DB201	
Gas Orifice Kit - #56 (LP)	LH32DB206	
Gas Orifice Kit - 1.25mm (LP)	LH32DB209	
Gas Orifice Kit - 1.30mm (LP)	LH32DB210	

DESCRIPTION	ACCESSORY PART NUMBER
HUMIDIFIER	Model HUM
HEAT RECOVERY VENTILATOR	Model HRV
ENERGY RECOVERY VENTILATOR	Model ERV
UV LIGHTS	Model UVL

Bryant has a wide variety of thermostats for your system, please visit **www.Bryant.com** to see all thermostat and IAQ products.

DESCRIPTION	ACCESSORY PART NUMBER	17"	21"	24"
Bryant Carbon Monoxide Alarm (10 pack)	COALMBBNRB02-A10	X	X	X
Bryant Evolution Air Purifier - 16" x 25" (407 x 635 mm)	DGAPAXX1625	X	–	–
Bryant Evolution Air Purifier - 20" x 25" (508 x 635 mm)	DGAPAXX2025	–	X	X
Bryant Evolution Air Purifier Repl. Filter- 16" x 25" (407 x 635 mm)	PGAPXCAR1625A02	X	–	–
Bryant Evolution Air Purifier Repl. Filter- 20" x 25" (508 x 635 mm)	PGAPXCAR2025A02	–	X	X
Cartridge Media Filter - 16" (407 mm) (MERV 11)	FILXXCAR0116	X	–	–
Cartridge Media Filter - 16" (407 mm) (MERV 8)	FILXXCAR0016	X	–	–
Cartridge Media Filter - 20" (508 mm) (MERV 8)	FILXXCAR0020	–	X	–
Cartridge Media Filter - 20" (508 mm) (MERV11)	FILXXCAR0120	–	X	–
Cartridge Media Filter - 24" (610 mm) (MERV 8)	FILXXCAR0024	–	–	X
Cartridge Media Filter - 24" (610 mm) (MERV11)	FILXXCAR0124	–	–	X
EZ Flex Cabinet Side or Bottom - 16"	EZXCAB--0016	X	–	–
EZ Flex Cabinet Side or Bottom - 20"	EZXCAB--0020	–	X	X
EZ Flex Replacement Filters 16" MERV 10	EXPXXFIL0016	X	–	–
EZ Flex Replacement Filters 16" MERV 13	EXPXXFIL0316	X	–	–
EZ Flex Replacement Filters 20" MERV 10	EXPXXFIL0020	–	X	–
EZ Flex Replacement Filters 20" MERV 13	EXPXXFIL0320	–	X	–
EZ Flex Replacement Filters 24" MERV 10	EXPXXFIL0024	–	–	X
EZ Flex Replacement Filters 24" MERV 13	EXPXXFIL0324	–	–	X
EZ-Flex Filter with End Caps - 16" (407 mm) (MERV 10)	EXPXXUNV0016	X	–	–
EZ-Flex Filter with End Caps - 16" (407 mm) (MERV 13)	EXPXXUNV0316	X	–	–
EZ-Flex Filter with End Caps - 20" (508 mm) (MERV 10)	EXPXXUNV0020	–	X	–
EZ-Flex Filter with End Caps - 20" (508 mm) (MERV 13)	EXPXXUNV0320	–	X	–
EZ-Flex Filter with End Caps - 24" (610 mm) (MERV 10)	EXPXXUNV0024	–	–	X
EZ-Flex Filter with End Caps - 24" (610 mm) (MERV 13)	EXPXXUNV0324	–	–	X
Media Filter Cabinet - 20"	FILCABXL0020	–	X	–
Media Filter Cabinet - 24"	FILCABXL0024	–	–	X
Media Filter Cabinet - 16"	FILCABXL0016	X	-	-

GUIDE SPECIFICATIONS

General

System Description

Furnish a _____ 4-way multipoise gas-fired condensing furnace for use with natural gas or propane (factory-authorized conversion kit required for propane).

Quality Assurance

Unit will be designed, tested and constructed to the current ANSI Z 21.47/CSA 2.3 design standard for gas-fired central furnaces.

Unit will be third party certified by CSA to the current ANSI Z 21.47/CSA 2.3 design standard for gas-fired central furnaces. Unit will carry the CSA Blue Star® and Blue Flame® labels. Unit efficiency testing will be performed per the current DOE test procedure as listed in the Federal Register.

Unit will be certified for capacity and efficiency and listed in the latest AHRI Consumer's Directory of Certified Efficiency Ratings.

Unit will carry the current Federal Trade Commission Energy Guide efficiency label.

Delivery, Storage, and Handling

Unit will be shipped as single package only and is stored and handled per unit manufacturer's recommendations.

Warranty (for inclusion by specifying engineer)

U.S. and Canada only. Warranty certificate available upon request.

Equipment

Blower Wheel and ECM Blower Motor

Galvanized blower wheel shall be centrifugal type, statically and dynamically balanced. Blower motor of ECM type shall be permanently lubricated with sealed ball bearings, of _____HP, and have multiple speeds from 600-1200 RPM operating only when 24-VAC motor inputs are provided. Blower motor shall be direct drive and soft mounted to the blower housing to reduce vibration transmission.

Filters

Furnace shall have reusable-type filters.

Filter shall be _____ in. (mm) x_____ in. (mm).

An accessory highly efficient Media Filter is available as an option. _____ Media Filter.

Casing

Casing shall be of 0.030 in. thickness minimum, pre-painted steel.

Draft Inducer Motor

Draft inducer motor shall be single-speed PSC design.

Primary Heat Exchangers

Primary heat exchangers shall be 3-Pass corrosion-resistant aluminized steel of fold-and-crimp sectional design and applied operating under negative pressure.

Secondary Heat Exchangers

Secondary heat exchangers shall be of a stainless steel flow-through of fin-and-tube design and applied operating under negative pressure.

Controls

Controls shall include a micro-processor-based integrated electronic control board with at least 16 service troubleshooting codes displayed via diagnostic flashing LED light on the control, a self-test feature that checks all major functions of the furnace, and a replaceable automotive-type circuit protection fuse. Multiple operational settings available, including blower speeds for heating and cooling.

Operating Characteristics

Heating capacity shall be _____ Btuh input; _____ Btuh output capacity.

Fuel Gas Efficiency shall be _____AFUE.

Air delivery shall be _____ cfm minimum at 0.50 in. W.C. external static pressure.

Dimensions shall be: depth_____in. (mm); width _____in. (mm); height_____in. (mm) (casing only).

Height shall be_____in. (mm) with A/C coil and _____in. (mm) overall with plenum.

Electrical Requirements

Electrical supply shall be 115 volts, 60 Hz, single-phase (nominal). Minimum wire size shall be _____AWG; maximum fuse size of HACR-type designated circuit breaker shall be _____ amps.

Special Features

Refer to section of the product data identifying accessories and descriptions for specific features and available enhancements.

© 2026 Carrier. All rights reserved.

Manufacturer reserves the right to change, at any time, specifications and designs without notice and without obligations.