619AHB
High Wall Ductless System
Sizes 06 to 36

Service Manual

TABLE of CONTENTS

	PAGE
INTRODUCTION	1
MODEL / SERIAL NUMBER NOMENCLATURES	2
WIRING	3
CONNECTION DIAGRAMS	4
WIRING DIAGRAM	5
REFRIGERATION CYCLE DIAGRAM	6
REFRIGERANT LINES	6
FAN AND MOTOR SPECIFICATIONS	7
SYSTEM EVACUATION AND CHARGING	8
INQUIRY MODE	12
TROUBLESHOOTING	13
INDOOR UNIT DIAGNOSTIC GUIDES	14
DIAGNOSIS AND SOLUTION	15
APPENDICIES	37
DISASSEMBLY INSTRUCTIONS	40

Installing, starting up, and servicing air conditioning equipment can be hazardous due to system pressures, electrical components, and equipment location (roofs, elevated structures, etc.). Only trained, qualified installers and service mechanics should install, start-up, and service this equipment. Untrained personnel can perform basic maintenance functions such as coil cleaning. All other operations should be performed by trained service personnel.

When working on the equipment, observe precautions in the literature and on tags, stickers, and labels attached to the equipment. Follow all safety codes. Wear safety glasses and work gloves. Keep a quenching cloth and fire extinguisher nearby when brazing. Use care in handling, rigging, and setting bulky equipment.

Read this manual thoroughly and follow all warnings or cautions included in the literature and attached to the unit. Consult local building codes and National Electrical Code (NEC) for special requirements. Recognize safety information. This is the safety-alert symbol ⚠. When you see this symbol on the unit and in instructions or manuals, be alert to the potential for personal injury. Understand these signal words: **DANGER**, **WARNING**, and **CAUTION**.

These words are used with the safety-alert symbol. **DANGER** identifies the most serious hazards which **will** result in severe personal injury or death. **WARNING** signifies hazards which **could** result in personal injury or death. **CAUTION** is used to identify unsafe practices which **may** result in minor personal injury or product and property damage. **NOTE** is used to highlight suggestions which **will** result in enhanced installation, reliability, or operation.

⚠ WARNING

ELECTRICAL SHOCK HAZARD
Failure to follow this warning could result in personal injury or death.

Before installing, modifying, or servicing the system, the main electrical disconnect switch must be in the **OFF** position. There may be more than 1 disconnect switch. Lock out and tag switch (es) with a suitable warning label.

⚠ WARNING

EXPLOSION HAZARD
Failure to follow this warning could result in death, serious personal injury, and/or property damage. Never use air or gases containing oxygen for leak testing or operating refrigerant compressors. Pressurized mixtures of air or gases containing oxygen can lead to an explosion.

⚠ CAUTION

EQUIPMENT DAMAGE HAZARD
Failure to follow this caution may result in equipment damage or improper operation.

Do not bury more than 36 in. (914 mm) of refrigerant pipe in the ground. If any section of pipe is buried, there must be a 6 in. (152 mm) vertical rise to the valve connections on the outdoor units. If more than the recommended length is buried, refrigerant may migrate to the cooler buried section during extended periods of a system shutdown. This causes refrigerant slugging and could possibly damage the compressor at start-up.

INTRODUCTION

This service manual provides the necessary information to service, repair, and maintain the **619AHB** family of heat pumps. This manual has an appendix (see “APPENDICIES” on page 37) with data required to perform troubleshooting. Use the “TABLE of CONTENTS”on page 1 to locate a desired topic.

Specifications subject to change without notice.

MODEL / SERIAL NUMBER NOMENCLATURES

Table 1 —Unit Sizes

SYSTEM TONS	VOLTAGE	INDOOR MODEL
1.00	115-1-60	619AHBQ12XA1
0.50	208/230-1	619AHBQ06XA3
0.75		619AHBQ09XA3
1.00		619AHBQ12XA3
1.50		619AHBQ18XA3
2.00		619AHBQ24XA3
2.50		619AHBQ30XA3
3.00		619AHBQ36XA3

INDOOR UNIT

619 A H B Q 36 X A 3

619 = INDOOR UNIT

A = MODEL

INDOOR UNIT FAN COIL UNIT TYPE
H = HIGH WALL

MAJOR SERIES

INDOOR FAN COIL TYPE
Q = HEAT PUMP

NOMINAL CAPACITY
06 - 1/2 TON
09 - 3/4 TON
12 - 1 TON
18 - 1-1/2 TONS
24 - 2 TONS
30 - 2-1/2 TONS
36 - 3 TONS

VOLTAGE
1=115-1-60
3=208/230-1-60

VARIATIONS
A = STANDARD

MAXIMUM NUMBER OF FAN COILS CONNECTED TO THE OUTDOOR UNIT
A = 1:1

01 21 V 10001

Week of Manufacture

Year of Manufacture

V = ALL MODELS

Sequential Serial Number

Use of the AHRI Certified TM Mark indicates a manufacturer's participation in the program For verification of certification for individual products, go to www.ahridirectory.org.

WIRING

All wires must be sized per NEC (National Electrical Code) or CEC (Canadian Electrical Code) and local codes. Use the Electrical Data table MCA (minimum circuit amps) and MOCP (maximum over current protection) to correctly size the wires and the disconnect fuse or breakers respectively.

Per the caution note, only stranded copper conductors with a 600 volt insulation rating wire must be used.

Recommended Connection Method for Power and Communication Wiring:

The main power is supplied to the outdoor unit. The field supplied 14/3 stranded wire with ground with a 600 volt insulation rating, power/communication wiring from the outdoor unit to the indoor unit consists of four (4) wires and provides the power for the indoor unit.

Two wires are line voltage AC power: connect L1 to terminal (1), N or L2 to (2), Communication wire to (3), green ground wire to ground terminal. Refer to the “CONNECTION DIAGRAMS”on page 4 for 115 volt or 208/230 volt connection.

If installed in a high electromagnetic field area (EMF) and communication issues exist, a 14/2 stranded shielded wire can be used to replace (2) and (3) (polarity sensitive) between the outdoor unit and the indoor unit landing the shield onto the ground in the outdoor unit only.

CAUTION

EQUIPMENT DAMAGE HAZARD
Failure to follow this caution may result in damage or improper operation.
Wires should be sized based on NEC and local codes.

CAUTION

EQUIPMENT DAMAGE HAZARD
Failure to follow this caution may result in equipment damage or improper operation.
Be sure to comply with local codes while running wire from the indoor unit to the outdoor unit.
Every wire must be connected firmly. Loose wiring may cause the terminal to overheat or result in unit malfunction. A fire hazard may also exist. Ensure all wiring is tightly connected.
No wire should touch the refrigerant tubing, compressor or any moving parts.
Disconnecting means must be provided and shall be located within sight and readily accessible from the air conditioner.
Connecting cable with conduit shall be routed through the hole in the conduit panel.

Manufacturer reserves the right to change, at any time, specifications and designs without notice and without obligations.

CONNECTION DIAGRAMS

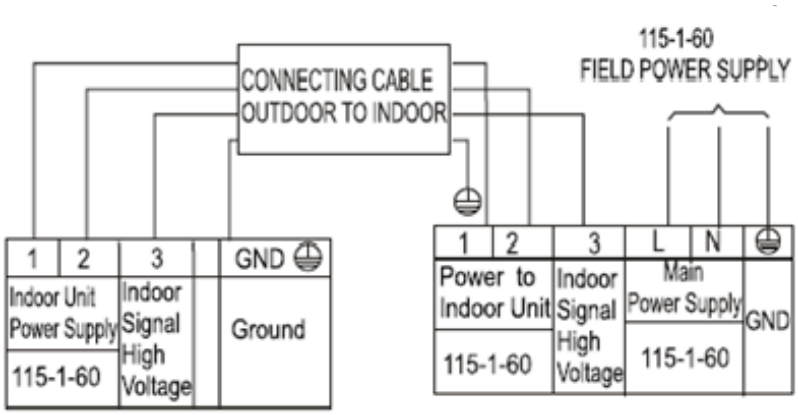

Fig. 1 — Connection Diagram - 12K (115V)

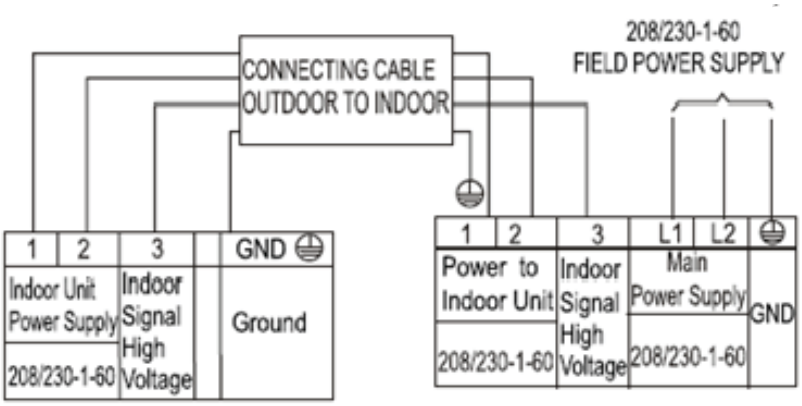

Fig. 2 — Connection Diagram - 6K - 18K (208/230-1-60)

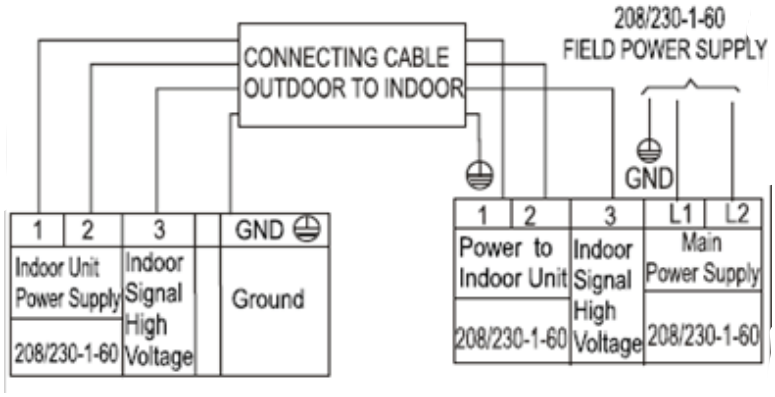

Fig. 3 — Connection Diagram - 24K - 36K (208/230-1-60)

NOTES:

1. Do not use thermostat wire for any connection between indoor and outdoor units.
2. All connections between indoor and outdoor units must be as shown in figures 1 - 3. The connections are sensitive to polarity and will result in a fault code.

WIRING DIAGRAM

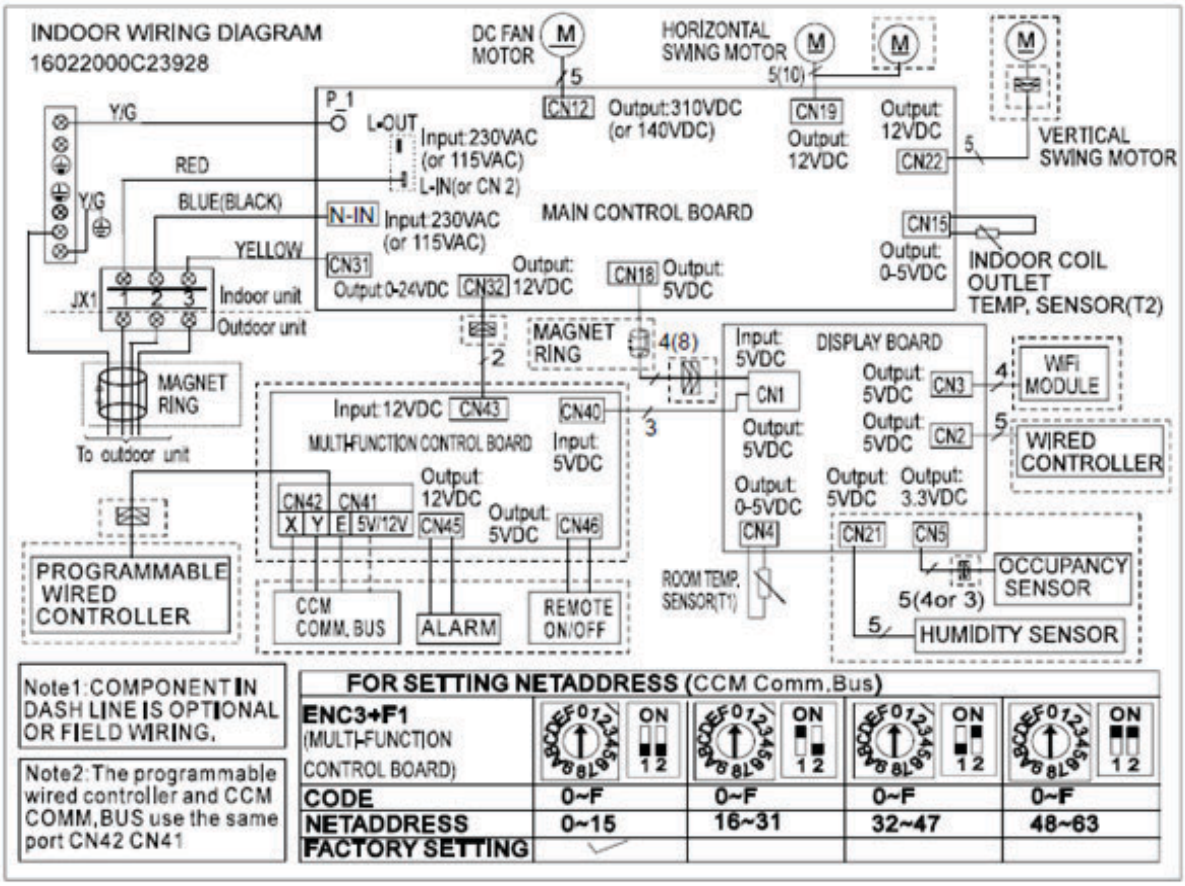

Fig. 4 —Wiring Diagram (All Sizes) 115 and 208/230))

REFRIGERATION CYCLE DIAGRAM

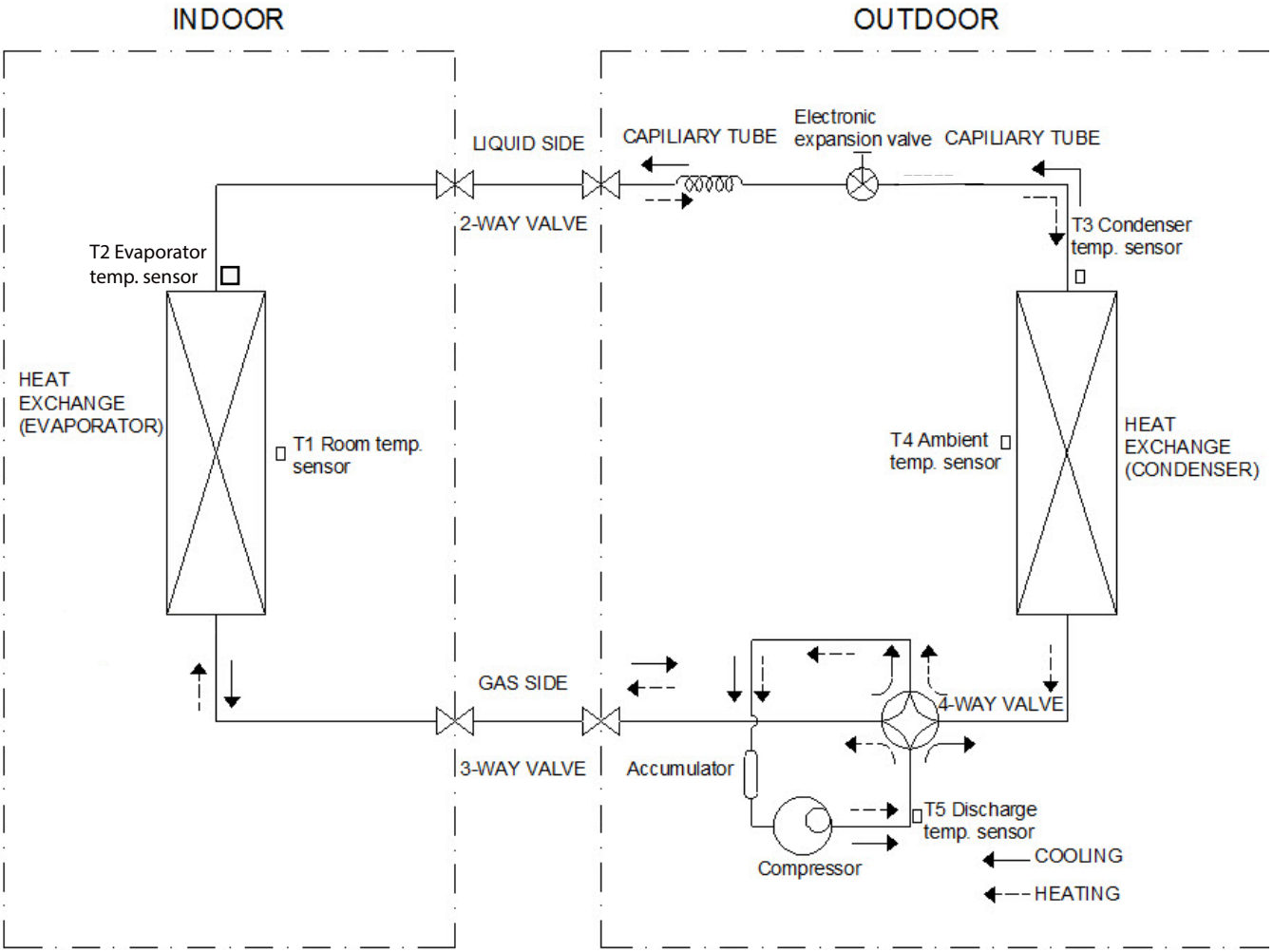

Fig. 5 — Refrigeration Cycle Diagram

REFRIGERANT LINES

IMPORTANT: Both refrigerant lines must be insulated separately.

Refer to the outdoor unit's installation instructions for other allowed piping lengths and refrigerant information.

FAN AND MOTOR SPECIFICATIONS

Table 2 — Fan and Motor Specifications

HIGH WALL UNIT SIZE			12K	6K	9K	12K	18K	24K	30K	36K
			(115 V)	(208/230 V)	(208/230 V)	(208/230 V)	(208/230 V)	(208/230 V)	(208/230 V)	(208/230 V)
HIGH WALL FAN	Material		Acrylontrile Styrene +30%GF	Acrylontrile Styrene +30%GF	Acrylontrile Styrene +30%GF	Acrylontrile Styrene +30%GF	Acrylontrile Styrene +30%GF	Acrylontrile Styrene +30%GF	Acrylontrile Styrene +30%GF	Acrylontrile Styrene +30%GF
	Type		GL-98*638-IN	GL-98*638-IN	GL-98*638-IN	GL-98*638-IN	GL-98*758-IN	GL-121*883-IN	GL-121*883-IN	GL-121*883-IN
	Diameter	In (mm)	3.86(98)	3.86(98)	3.86(98)	3.86(98)	3.86(98)	4.76(121)	4.76(121)	4.76(121)
	Height	In (mm)	25.12(638)	25.12(638)	25.12(638)	25.12(638)	29.84(758)	34.76(883)	34.76(883)	34.76(883)
HIGH WALL FAN MOTOR	Model		ZKFP-20-8-113	ZKFP-20-8-6-21	ZKFP-20-8-6-21	ZKFP-20-8-6-21	ZKFP-30-8-3-10	ZKFP-58-8-1-6	ZKFP-58-8-1-6	ZKFP-58-8-1-6
	Volts	V	115	208/230	208/230	208/230	208/230	208/230	208/230	208/230
	Phase		1	1	1	1	1	1	1	1
	FLA		0.2	0.25	0.25	0.25	0.13	0.5	0.5	0.5
	MCA		0.25	0.31	0.31	0.31	0.16	0.63	0.63	0.63
	Type		DC							
	Insulation class		E							
	Safe class		IP20(Welling, Dayang)/ IPX0 (Tongda)	IPX0	IPX0	IPX0	IPX4	IP20(Welling)/ IP40(Dayang)	IP20(Welling)/ IP40(Dayang)	IP20(Welling)/ IP40(Dayang)
	Input	W	65.8 (Welling,Tongda)/ 68 (Dayang)	24.6	24.6	36	36	113.5(Welling)/ 125(Dayang)	113.5(Welling)/ 125(Dayang)	113.5(Welling)/ 125(Dayang)
	Output	W	20	20	20	20	30	58	58	58
	Range of current	Amps	0.467±10% (Welling,Tongda)/ 0.486±10% (Dayang)	0.182±10%	0.182±10%	0.182±10%	0.11±10%	0.364±10% (Welling)/0.4±10% (Dayang)	0.364±10% (Welling)/0.4±10% (Dayang)	0.364±10% (Welling)/0.4±10% (Dayang)
	Rated current	Amps	0.467 (Welling,Tongda)/ 0.486 (Dayang)	0.182	0.182	0.182	0.11	0.364(Welling)/ 0.4(Dayang)	0.364(Welling)/ 0.4(Dayang)	0.364(Welling)/ 0.4(Dayang)
	Capacitor	µF	N/A							
	Rated HP	HP	0.027	0.027	0.027	0.027	0.04	0.077	0.077	0.077
	Speed	rev/min	1200/910/720	1100/850/700	1100/850/700	1050/930/870	1240/1024/916	1000/850/700	1050/880/630	1050/880/630
	Rated RPM	rev/min	1200	1100	1100	1050	1240	1000	1050	1050
	Max. input	W	65.8	24.6	24.6	24.6	36	113.5	113.5	113.5

SYSTEM EVACUATION AND CHARGING

CAUTION

UNIT DAMAGE HAZARD
Failure to follow this caution may result in equipment damage or improper operation.

Never use the system compressor as a vacuum pump.

Refrigerant tubes and indoor coil should be evacuated using the recommended deep vacuum 500 microns method. The alternate triple evacuation method may be used if the following procedure is followed. Always break a vacuum with dry nitrogen.

NOTE: All units (except the 18,000 BTU model) have a Master Suction and Liquid Line Service Valve.

System Vacuum and Charge

Using the Vacuum Pump

1. Completely tighten the flare nuts (A, B, C, D, E). Fully open all circuits service valves. Connect the manifold gage charge hose to the charge port of the low side Master service valve to evacuate all circuits at the same time (see Fig. 6).
2. Connect the charge hose to the vacuum pump.
3. Fully open the low side of the manifold gage (see Fig. 7).
4. Start the vacuum pump.
5. Evacuate using the triple evacuation method.
6. After evacuation is complete, fully close the low side of the manifold gage and stop the vacuum pump operation.
7. The factory charge, contained in the outdoor unit, is good for up to 25ft. (8 m) of line length.
8. Disconnect the charge hose from the charge connection of the low side service valve.
9. Securely tighten the service valves caps.

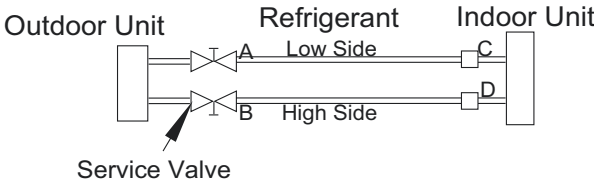

Fig. 6 —Service Valve

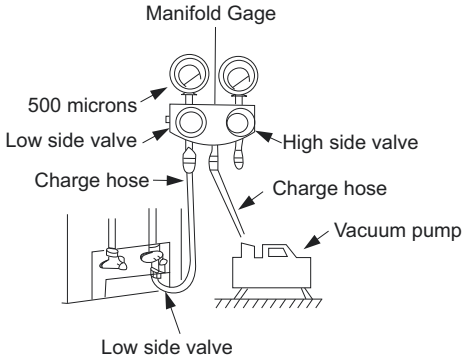

Fig. 7 —Manifold

Deep Vacuum Method

The deep vacuum method requires a vacuum pump capable of pulling a vacuum of 500 microns and a vacuum gage capable of accurately measuring this vacuum depth. The deep vacuum method is the most effective way of assuring a system is free of air and liquid water (see Fig. 8).

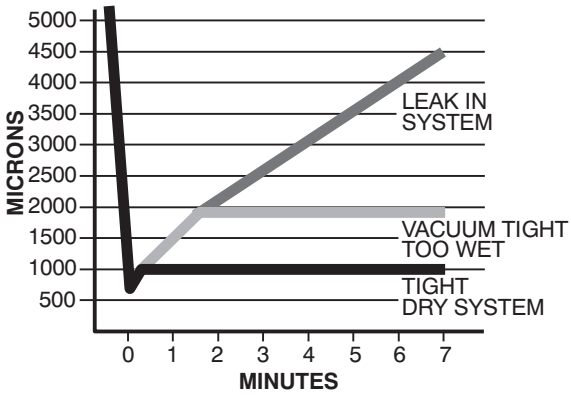

Fig. 8 —Deep Vacuum Graph

Triple Evacuation Method

Refer to Fig. 9 and proceed as follows:

1. Pump the system down to 500 MICRONS of mercury and allow the pump to continue operating for an additional 15 minutes.
2. Close the service valves and shut off the vacuum pump.
3. Connect a nitrogen cylinder and regulator to the system and open until the system pressure is 2 psig.
4. Close the service valve and allow the system to stand for 10 minutes. During this time, dry nitrogen can diffuse throughout the system absorbing moisture.
5. Repeat this procedure as indicated in Fig. 9. Afterwards the system will be free of any contaminants and water vapor.

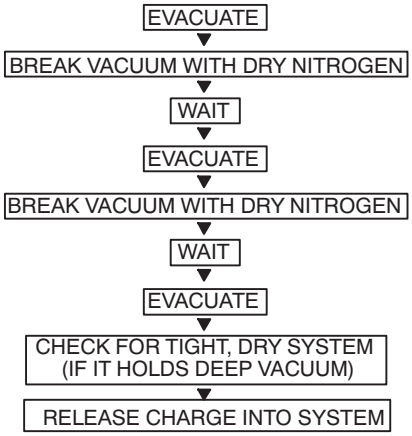

Fig. 9 —Triple Evacuation Method

Final Tubing Check

IMPORTANT: Ensure the factory tubing on both the indoor and outdoor unit has not shifted during shipment. Ensure the tubes are not rubbing against each other or any sheet metal. Pay close attention to the feeder tubes to ensure the wire ties on the feeder tubes are secure and tight.

Manufacturer reserves the right to change, at any time, specifications and designs without notice and without obligations.

Main Protection

Fan speed is out of control

When the indoor fan speed is too low (300RPM) or too high (1500RPM) for a certain time, the unit stops and the LED displays a failure.

Inverter module protection

The inverter module has a protection function for current, voltage and temperature. If any of these protections engage, the corresponding code displays on the indoor unit and the unit stops working.

Indoor fan delayed open function

When the unit starts up, the louver activates immediately and the indoor fan opens 10s later. If the unit is running in the **HEATING** mode, the indoor fan is controlled by the anti-cold wind function.

Zero crossing detection error protection

If the AC detects that the time interval is not correct for a continuous 240s, the unit stops and the **LED** displays the failure. The correct zero crossing signal time interval should be between 6-13ms.

Sensor protection at open circuit and breaking disconnection

If only one temperature sensor malfunctions, the air conditioner continues to work however the error code appears on the LED, in the event of any emergency use. If more than one temperature sensor malfunctions, the air conditioner stops working.

Operation Modes and Functions

FAN Mode

1. Outdoor fan and compressor stop
2. Temperature setting function is disabled and no setting temperature appears.
3. Indoor fan can be set to high/med/low/auto
4. The louver operates the same as in the **COOLING** mode.

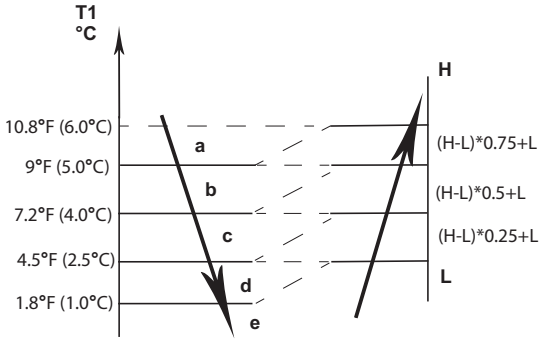

Fig. 10 —AUTO FAN Mode

COOLING Mode

Indoor Fan Running Rules:

In the **COOLING** mode, the indoor fan runs all the time and the speed can be selected as **HIGH**, **MEDIUM**, **LOW** and **AUTO**. When the setting temperature is reached, if the compressor stops running, the indoor fan motor runs at the minimum or setting speed. The indoor fan is controlled by the rules shown in Fig. 11.

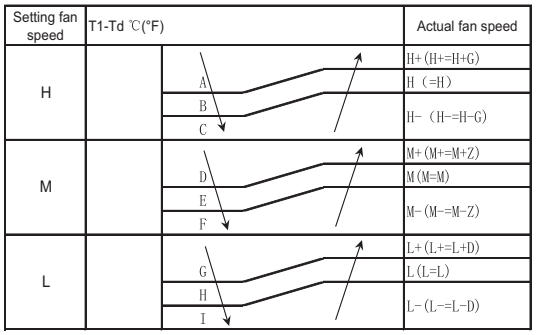

Fig. 11 — Indoor Fan Running Rules

The **AUTO** fan is controlled by the rules shown in Fig. 12.

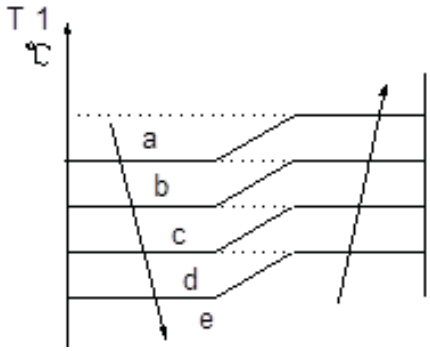

Fig. 12 — Indoor Fan Running Rules

Evaporator Temperature Protection

When the evaporator temperature is less than the setting value, the compressor stops.

HEATING Mode

Indoor Fan Running Rules:

When the compressor is on, the indoor fan can be set to **HIGH**, **MEDIUM**, **LOW**, **AUTO**, **MUTE**. When the indoor unit coil temperature is low, the anti-cold air function starts and the indoor fan motor runs at a low speed and the speed cannot be changed. When the temperature is lower than the setting value, the indoor fan motor stops. When the indoor temp reaches the setting temperature, the compressor stops and the indoor fan motor runs at the minimum speed or setting speed. The anti-cold air function is valid. The indoor fan is controlled as shown in Fig. 13.

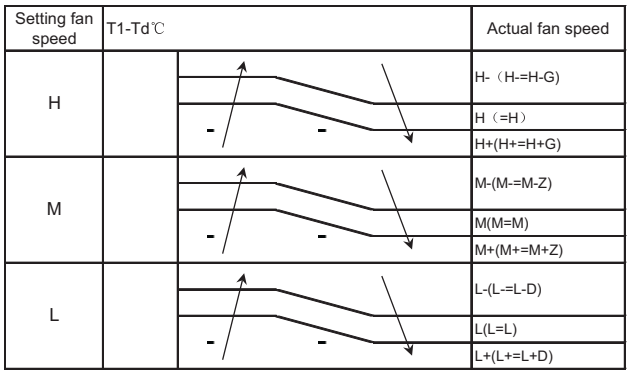

Fig. 13 —Indoor Fan Running Rules

AUTO Fan Action in HEATING Mode

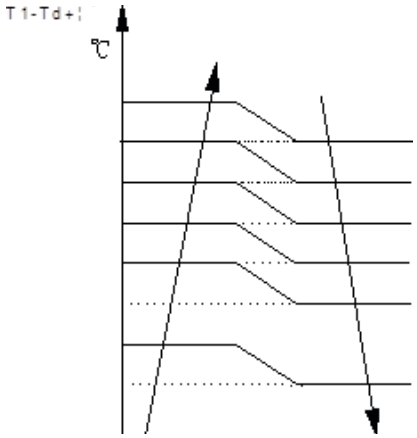

Fig. 14 — AUTO Fan Action in HEATING Mode

DEFROSTING Mode

The air conditioner enters the **DEFROSTING** mode according to the T3 temperature value and the T3 temperature change value range plus the compressor running time. During the **DEFROSTING** mode, the compressor continues to runs, the indoor and outdoor motors stop, and the indoor unit defrost lamp illuminates and dF appears.

Evaporator Coil Temperature Protection

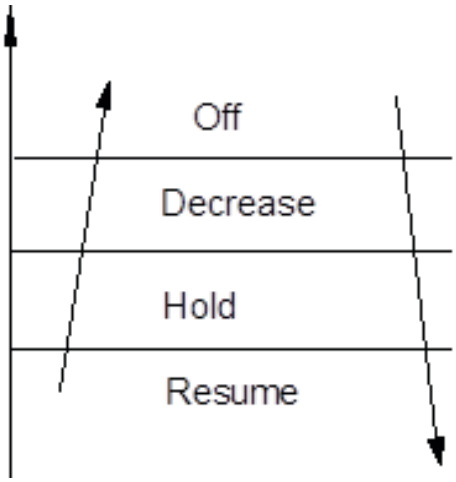

Fig. 15 — Evaporator Coil Temperature Protection

When the evaporator temperature is higher than the setting protection value, the compressor stops.

AUTO Mode

This mode can be chosen with the remote controller and the setting temperature can be changed between 62.6°F(17°C)~86°F(30°C). In the **AUTO** mode, the air conditioner chooses the **COOLING**, **HEATING** or **FAN ONLY** mode according to ΔT (ΔT =T1-Ts).

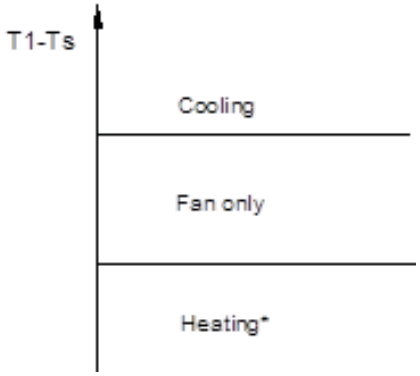

Fig. 16 — AUTO Mode

The indoor fan runs under **AUTO** fan in the relevant mode. The louver operates the same as in relevant mode. If the air conditioner switches between the **HEATING** and **COOLING** mode, the compressor stops for a certain period of time and then chooses the mode according to T1-Ts. If the setting temperature is modified, the air conditioner chooses the running function again.

DRYING Mode

Indoor Fan Speed is Fixed

Indoor fan speed is fixed at **BREEZE** and can not be changed. The louver angle is the same as in the **COOLING** mode.

Low Indoor Room Temperature Protection

In the **DRYING** mode, if the room temperature is lower than 50°F (10°C), the compressor stops and will not resume until the room temperature exceeds 53.6°F (12°C).

Evaporator Anti-Freezing Protection

The evaporator anti-freezing protection condenser high temperature protection and outdoor unit frequency limit are active and the same as that in the **COOLING** mode.

Outdoor Fan

The outdoor fan operates the same as in the **COOLING** mode.

Forced Operation Function

When the air conditioner is off, press **TOUCH** to engage the **Forced AUTO** mode. Press **TOUCH** again within 5 seconds to engage the **Forced COOLING** mode. In the **Forced AUTO**, **Forced COOLING** or any other operation mode, press **TOUCH** to turn off the air conditioner.

Forced Operation Mode

In the **Forced OPERATION** mode, all the general protections and the remote controller are available.

Operation Rules

Forced Cooling Mode

The compressor runs at the F2 frequency and the indoor fan runs in the **BREEZE** mode. After running for 30 minutes. the air conditioner enters the **AUTO** mode at the 75.2°F(24°C) setting temperature.

Forced Auto Mode:

The **Forced AUTO** mode is the same as the normal **AUTO** mode with a 75.2°F(24°C) setting temperature.

Forced DEFROSTING Mode:

1. Press and hold **AUTO/COOL** for 5s to enter the mode. The indoor fan stops and the defrosting lamp dF illuminates. Use the remote controller to exit this mode and turn off the air conditioner to stop the normal **DEFROSTING** mode.
2. To exit the **Forced DEFROSTING** mode, press and hold **AUTO/COOL** for 5s again.

AUTO-RESTART Function

The indoor unit is equipped with the **AUTO-RESTART** function, which is carried out through an auto-restart module. In the event of a sudden power failure, the module memorizes the setting conditions prior to the power failure. The air conditioner resumes the previous operation setting (not including the **SWING** function) automatically three (3) minutes after the power returns.

If the memorization condition is the **Forced COOLING** mode, the air conditioner runs in the **COOLING** mode for 30 minutes and turns to the **AUTO** mode at the 75.2°F(24°C) setting temperature. If the air conditioner is off before the power turns off and the air conditioner is required to start up, the compressor delays start-up for 1 minute before powering on. In other instances, the compressor waits three (3) minutes before restarts.

Refrigerant Leakage Detection

With this new technology, the display area displays **"EC"** when the outdoor unit detects a refrigerant leak. This function is only active in the **COOLING** mode. The function can further prevent the compressor from being damaged by a refrigerant leak or a compressor overload.

- **Open Condition:** When the compressor is active, the value of the coil temperature of evaporator T2 experiences no to very little change.

Louver Position Memory Function

When starting the air conditioner again after a shut down, the louver returns to the angle originally set by the user, however the precondition is that the angle must be within the allowable range. If the louver exceeds the allowable range, the air conditioner memorizes the maximum angle of the louver. During operation, if the power fails or the end user shuts down the air conditioner in the **TURBO** mode, the louver returns to the default angle.

46°F (8°C) Heating

When the compressor is running, the indoor fan motor runs without the **ANTI−COLD** air function. When the compressor is off, the indoor fan motor is off.

Silence Operation

Press **SILENCE** on the remote controller to initiate the **SILENCE** function. When **SILENCE** is activated, the compressor running frequency remains lower than **F2** and the indoor unit emits a faint breeze, which reduces the noise to the lowest level and creates a quiet and comfortable room for the user.

Inquiry Mode

Press and hold together the **On/Off** and **Fan** buttons for 8 seconds. The remote control remains in **Inquiry Mode** for 1 minute if no button is pressed. In the **Inquiry Mode**, the remote display cancels all icons except **AUTO**, **COOL**, **DRY**, **HEAT** and battery strength. The digital display defaults to "0" upon entering the Inquiry Mode. In **Inquiry Mode**, each digital code (from 0 to 30) is accessed by pressing the UP or DOWN arrow.

Manufacturer reserves the right to change, at any time, specifications and designs without notice and without obligations.

INQUIRY MODE

To enter the **Inquiry Mode**:
Press and hold together the **On/Off** and **Fan** buttons for 8 seconds. The remote control remains in **Inquiry Mode** for 1 minute if no button is pressed. In the **Inquiry Mode**, the remote display cancels all icons except **AUTO**, **COOL**, **DRY**, **HEAT** and battery strength. The digital display defaults to “0” upon entering the **Inquiry Mode**. In **Inquiry Mode**, each digital code (from 0 to 30) is accessed by pressing the **UP** or **DOWN** arrow.

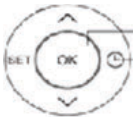

Fig. 17 — Up and Down Arrow

The Inquiry information displays on the high wall indoor unit display in approximately 1 second of accessing the digital code. Press **OK** to send as well.

Table 3 — Inquiry Codes and Symbols

CODE	INQUIRY SYMBOL	DESCRIPTION
Code 0		None
Code 1	T1	Indoor ambient
Code 2	T2	Indoor pipe
Code 3	T3	Outdoor pipe
Code 4	T4	Outdoor air
Code 5	TP (T5)	Compressor discharge
Code 6	FT	Compressor target frequency
Code 7	Fr	Compressor run frequency
Code 8	dL	Unit amperage
Code 9	Uo	Unit voltage
Code 10	Sn	Capacity test (special usage)
Code 11	----	N/A
Code 12	Pr	Indoor fan speed
Code 13	Lr	Electronic Expansion Valve (EEV) opening
Code 14	ir	Indoor fan speed
Code 15	HU	Humidity
Code 16	TT	Setpoint compensation temperature
Code 17	dT	Dust concentration (not used)
Code 18	WIFI	Wi-Fi signal strength
Code 19	----	N/A
Code 20	oT	Indoor fan target frequency
Code 21	----	N/A
Code 22	----	N/A
Code 23	----	N/A
Code 24	----	N/A
Code 25	----	N/A
Code 26	----	N/A
Code 27	----	N/A
Code 28	----	N/A
Code 29	----	N/A
Code 30	----	N/A

To exit the **Inquiry Mode**:
Press and hold together the On/Off and Fan buttons for 2 seconds

TROUBLESHOOTING

Safety

Electricity power is kept in the capacitors even if the power supply is shut off.

NOTE: Remember to discharge the electricity power in capacitor.

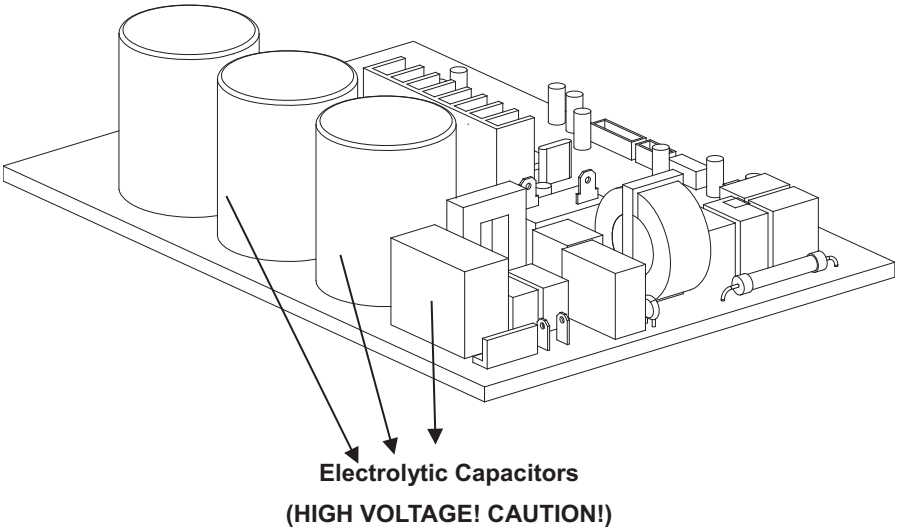

Fig. 18 —Electrolytic Capacitors

For other models, please connect discharge resistance (approximately 100Ω 40W) or a soldering iron (plug) between the +, - terminals of the electrolytic capacitor on the contrary side of the outdoor PCB.

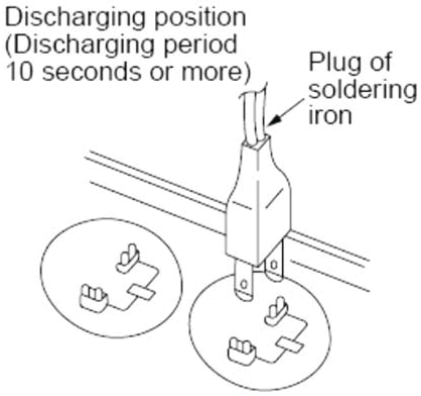

Fig. 19 —Discharge Position

NOTE: Fig. 19 is for reference only. The plug on your unit may differ.

INDOOR UNIT DIAGNOSTIC GUIDES

For ease of service, the systems are equipped with diagnostic code display LEDs on the indoor unit. There may be a few error codes displayed in the indoor unit that might relate to the outdoor unit's problems. If possible, always check the diagnostic codes displayed on the indoor unit first.

Table 4 — Indoor Unit Diagnostic Guides

GREEN LED	RED LED	FAILURE MODE
On	X	Standby, normal
X	On	Operation, normal
On	On	High/Low voltage protection on compressor terminal
On	☆	EEPROM error
X	☆	The compressor speed is out of control
☆	On	Zero-crossing signal detection error; lack of phase; synchronization error
☆	X	IGBT or Module protection
☆	☆	Communication error

☆ = Flashing, X = Off

Table 5 — Indoor Unit Diagnostic Guides

OPERATION LAMP (TIMES)	TIMER LAMP	DISPLAY	ERROR INFORMATION
☆1	OFF	EH 00/EH 0A	Indoor unit EEPROM parameter error
☆2	OFF	EL 01	Indoor/outdoor unit communication error
☆3	OFF	EH 02	Zero-crossing signal detection error
☆4	OFF	EH 03	Indoor fan operating outside of the normal range
☆5	OFF	EC 51	Outdoor unit EEPROM parameter error
☆5	OFF	EC 52	T3 is in open circuit or has short circuited
☆5	OFF	EC 53	T4 is in open circuit or has short circuited
☆5	OFF	EC 54	TP is in open circuit or has short circuited
☆5	OFF	EC 56	T2B is in open circuit or has short circuited
☆6	OFF	EH 60	T1 is in open circuit or has short circuited
☆6	OFF	EH 61	T2 is in open circuit or has short circuited
☆12	OFF	EC 07	Outdoor fan operating outside of the normal range
☆9	OFF	EH 0b	Indoor PCB/Display board communication error
☆8	OFF	EL 0C	Refrigerant leakage detection
☆7	FLASH	PC 00	IPM malfunction or IGBT OSCP
☆2	FLASH	PC 01	Over voltage or over low voltage protection
☆3	FLASH	PC 02	Compressor or IPM high temp/pressure protection
☆5	FLASH	PC 04	Inverter compressor drive error
☆1	FLASH	PC 08	Current overload protection
☆6	FLASH	PC 40	Comm. error between outdoor chip and compressor chip
☆7	FLASH	PC 03	Low pressure protection
☆1	ON	--	Indoor units mode conflict
☆9	OFF	EH b1	Indoor board and Multi-function communication error
☆11	OFF	FH 0d	Ionizer malfunction

O (on – light) X (off – light) ☆ (flash)

DIAGNOSIS AND SOLUTION

Outdoor Unit Error Display

After the power is on, LED1 (blue color) flashes slowly (once per second) when the unit is in standby. The LED flashes quickly (twice per second) if the unit has an issue.

Table 6 — Diagnostic Table Sizes 9K-18K

NO.	PROBLEMS	LED3 (GREEN)	LED2 (RED)	IU DISPLAY	SOLUTION
1	IPM malfunction or IGBT over - strong current protection	★	X	**P0**	Page 28
2	Over voltage or too low voltage protection	O	O	**P1**	Page 31
3	EEPROM parameter error	O	★	**E5**	Page 16
4	Inverter compressor drive error	X	★	**P4**	Page 35
5	Inverter compressor drive error	★	O	**P4**	Page 35
6	Inverter compressor drive error	★	★	**P4**	Page 35

O (light) X (off) ★ (2.5 Hz flash)

Table 7 — Diagnostic Table Sizes 24K - 36K

NO.	PROBLEMS	LED2 (GREEN)	LED3 (RED)	IU DISPLAY	SOLUTION
1	IPM malfunction or IGBT over - strong current protection	★	X	**P0**	Page 28
2	Over voltage or too low voltage protection	O	O	**P1**	Page 31
3	EEPROM parameter error	O	★	**E5**	Page 16
4	Inverter compressor drive error	X	★	**P4**	Page 35
5	Inverter compressor drive error	★	O	**P4**	Page 35
6	Inverter compressor drive error	★	★	**P4**	Page 35

Manufacturer reserves the right to change, at any time, specifications and designs without notice and without obligations.

DIAGNOSIS AND SOLUTION (CONT)

Outdoor EEPROM Parameter Error or Compressor Driven Chip EEPROM Parameter Error (EC51)

Description: Outdoor PCB main chip does not receive feedback from the EEPROM chip or the compressor driven chip.

Recommended parts to repair:

- Outdoor PCB

Troubleshooting

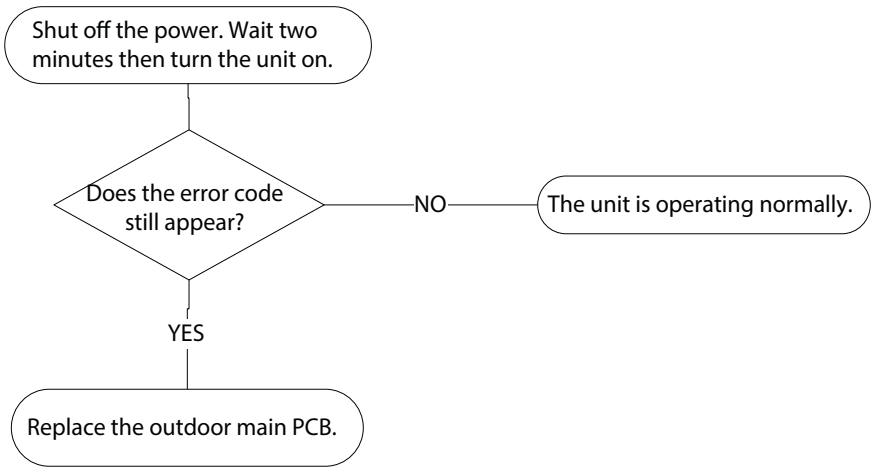

DIAGNOSIS AND SOLUTION (CONT)

Indoor and Outdoor Unit Communication Error (EL01)

Description: The indoor unit cannot communicate with the outdoor unit

Recommended parts to repair:

- Indoor PCB
- Outdoor PCB
- Short-circuited component

Troubleshooting

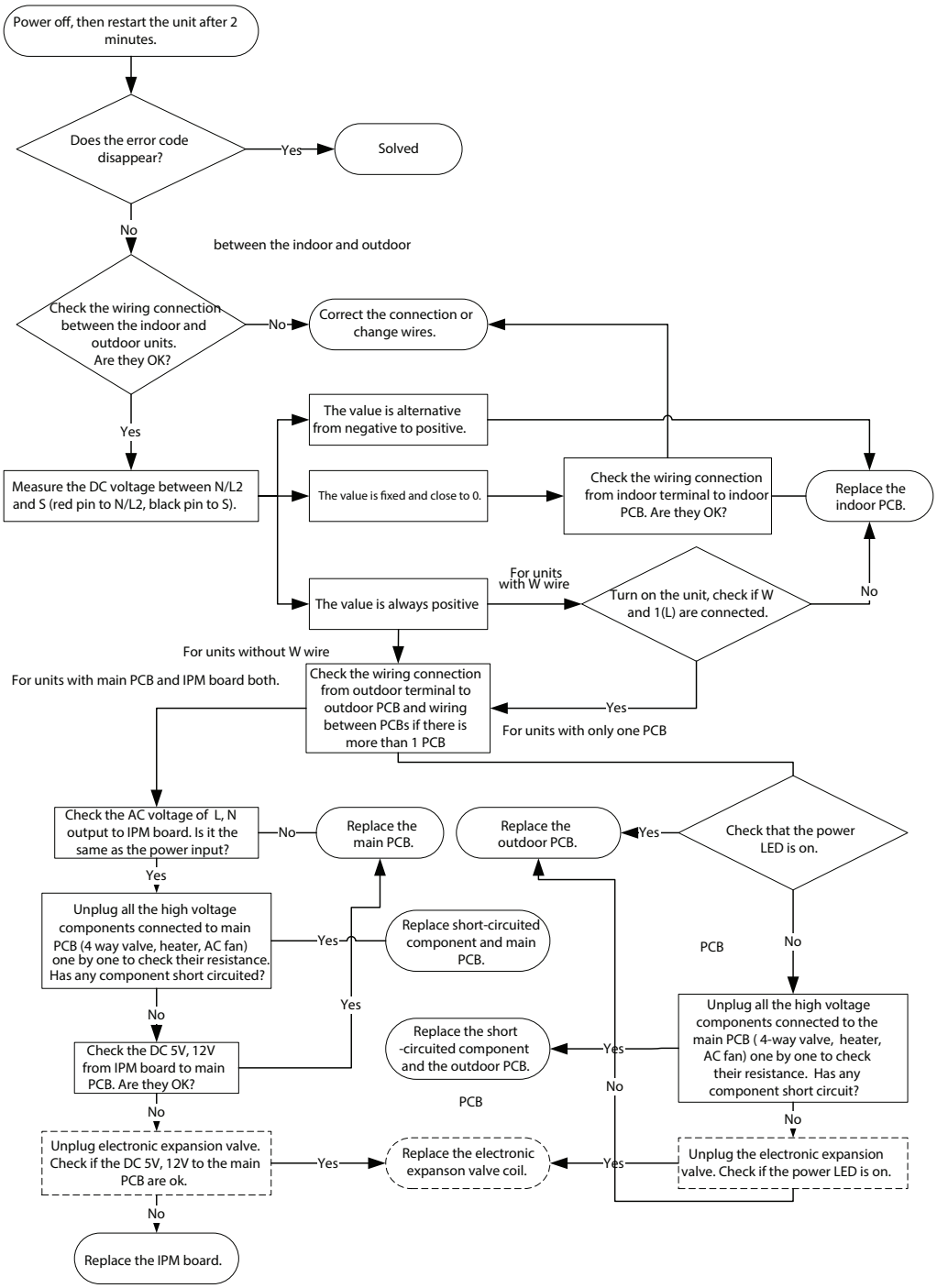

For certain models, outdoor PCB could not be removed separately. In this case, the outdoor electric control box should be replaced as a whole.

DIAGNOSIS AND SOLUTION (CONT)

Remarks:

- Use a multimeter to test the DC voltage between the 2 port (or S or L2 port) and 3 port (or N or S port) of the outdoor unit.
- The red pin of multimeter connects with 2 port (or S or L2 port) while the black pin is for 3 port (or N or S port) the unit is running normal, the voltage is moving alternately as positive values and negative values.
- If the outdoor unit malfunctions, the voltage remains in a narrow positive value.
- If the indoor unit malfunctions, the voltage maintains a fixed value.

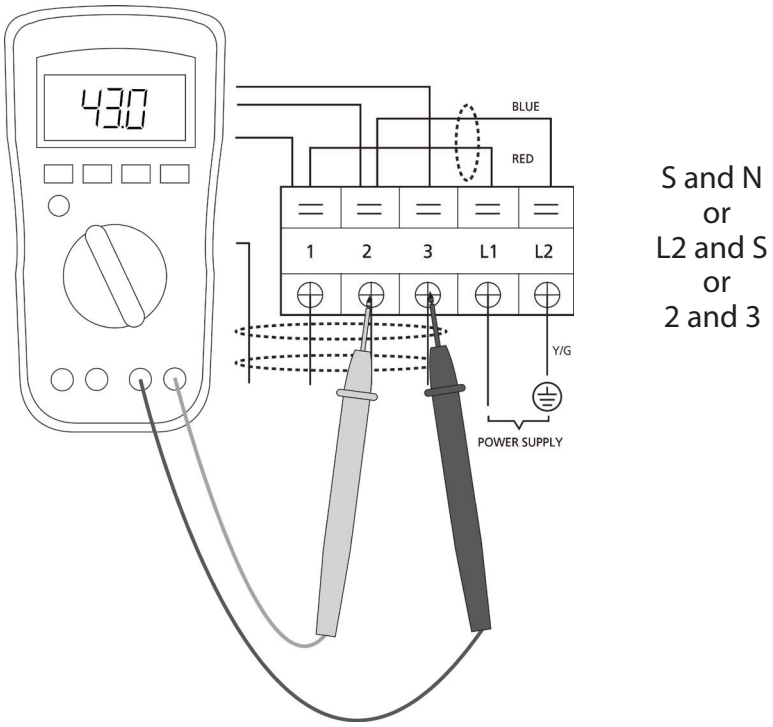

- Use a multimeter to test the reactor's resistance which does not connect with capacitor.
- The normal value should be around zero ohm. Otherwise, the reactor has malfunctioned. Check the reactor and make sure it is not shorted to the ground.

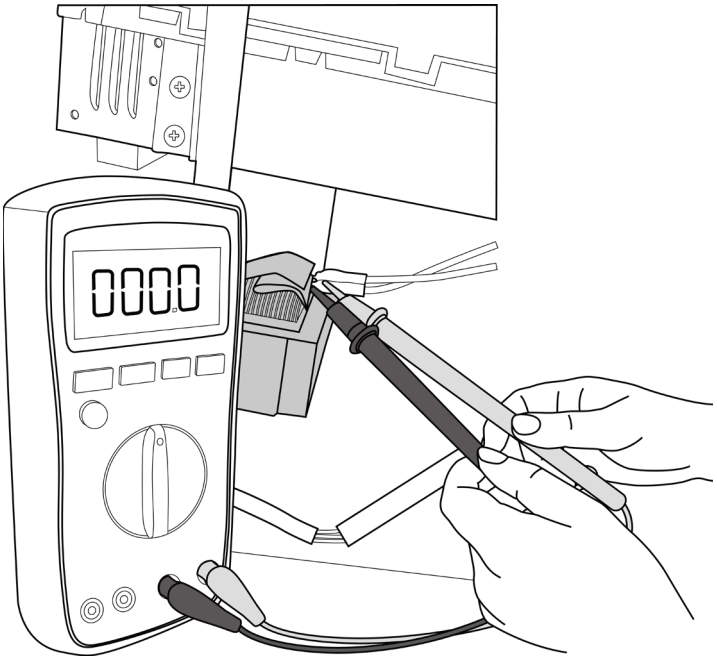

DIAGNOSIS AND SOLUTION (CONT)

Zero Crossing Detection Error Diagnosis and Solution (EH02)

Description: When the PCB does not receive a zero crossing signal feedback for 4 minutes or the zero crossing signal time interval is abnormal.

Recommended parts to repair:

- Connection wires
- Indoor main PCB

Troubleshooting

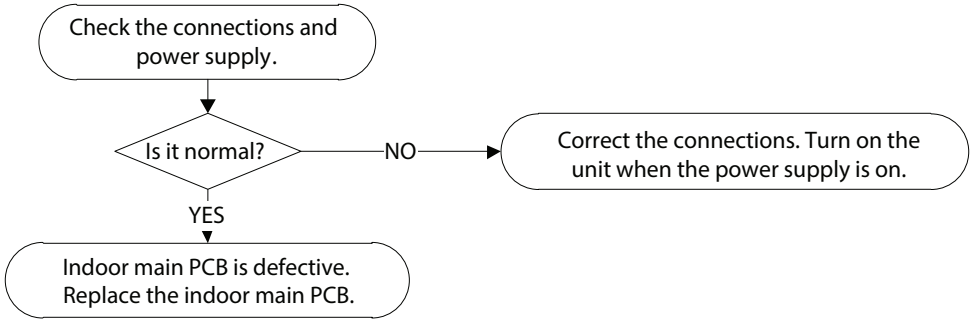

Note: Zero crossing detection error is only valid for the unit with an AC fan motor. For other models, this error does not apply.

DIAGNOSIS AND SOLUTION (CONT)

The indoor fan speed is operating outside of the normal range (EH03)

Description: When the indoor fan speed remains too slow or too fast for an extended period of time, the LED displays a failure code and the unit turns off.

Recommended parts to repair:

- Connection wires
- Indoor main PCB
- Fan assembly
- Indoor main PCB

Troubleshooting

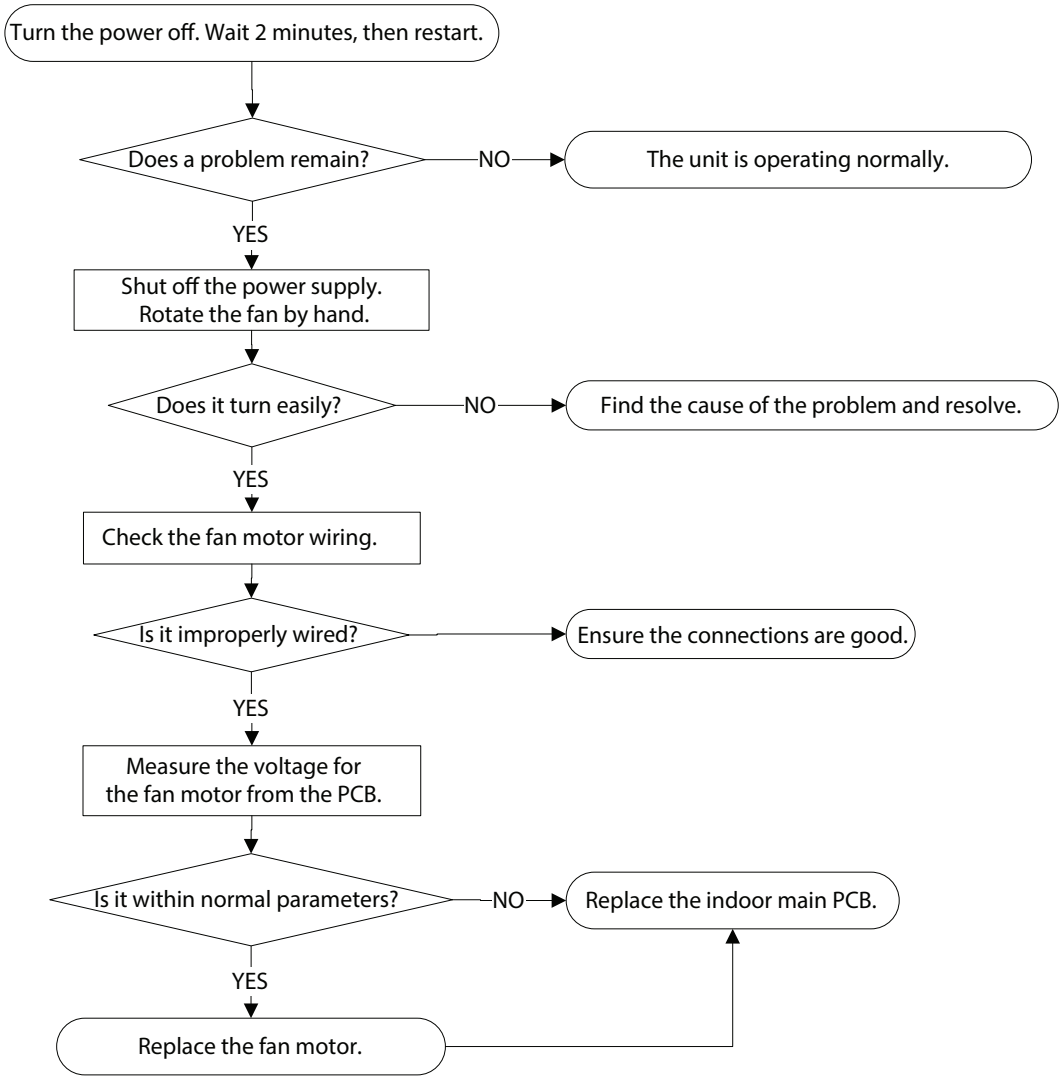

DIAGNOSIS AND SOLUTION (CONT)

The Outdoor Fan Speed is Operating Outside of Normal Range (EC07)

Description: When the outdoor fan speed remains too low or too high for a certain time, the LED displays the failure code and the AC turns off.

Recommended parts to repair:

- Connection wires
- Fan assembly
- Fan motor
- Outdoor main PCB

Troubleshooting

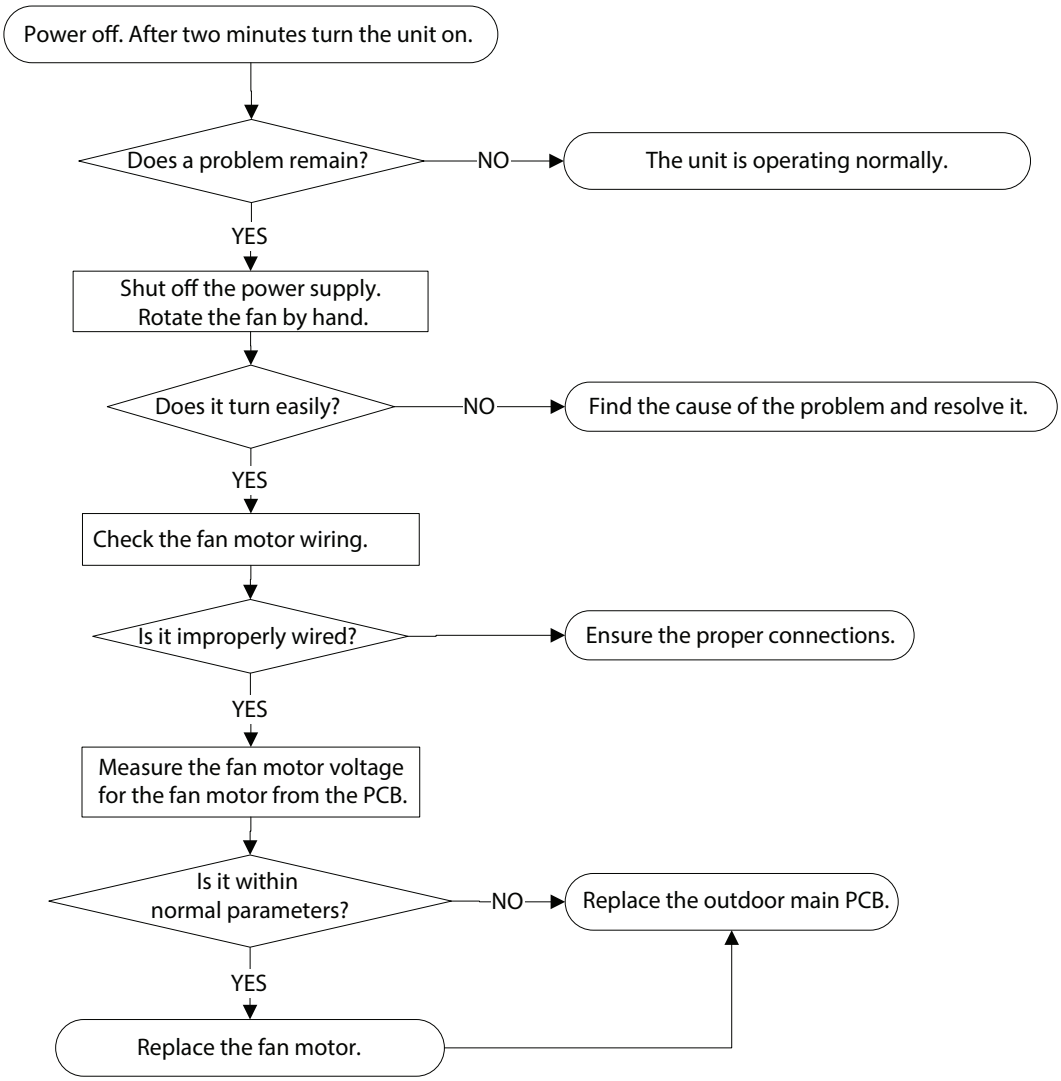

NOTE: For certain models, outdoor PCB could not be removed separately. In this case, the outdoor electric control box should be replaced as a whole.

DIAGNOSIS AND SOLUTION (CONT)

Outdoor DC Fan Motor (DC motor that controls the chip on the PCB)

1. Release the UVW connector. Measure the resistance of U-V, U-W, V-W. If the resistance is not equal to each other, the fan motor is faulty and must be replaced. Otherwise, proceed to step 2.
2. Power on the unit and when the unit is in standby, measure the pin4-5 voltage in the feedback signal connector. If the value is not 5V, change the PCB. Otherwise, proceed to step 3.

Rotate the fan by hand, measure the pin1-5, pin 2-5 and pin 3-5 voltage levels in the feedback signal connector. If any voltage is not in the positive voltage fluctuation, the fan motor is faulty and must be replaced.

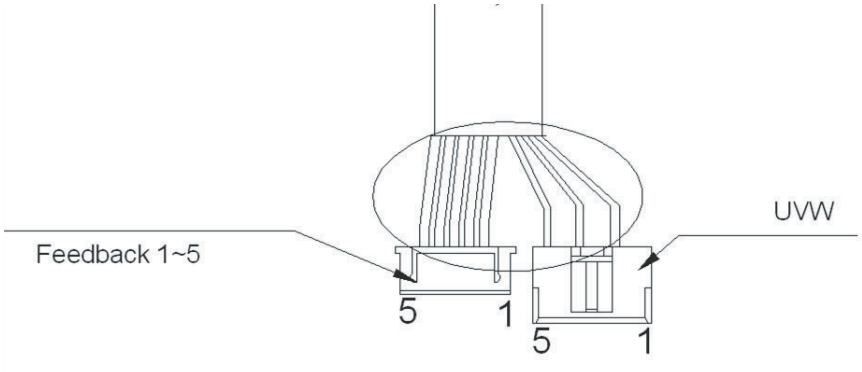

Fig. 20 — Outdoor DC Fan Motor (DC motor that controls the chip on the PCB)

NO.	1	2	3	4	5
Color	Orange	Grey	White	Pink	Black
Signal	Hu	Hv	Hw	Vcc	GND

Color	Red	Blue	Yellow
Signal	W	V	U

DIAGNOSIS AND SOLUTION (CONT)

Indoor Temperature Sensor Is an Open Circuit or a Short Circuit (T1, T2) (EH60)

Description: If the sampling voltage is lower than 0.06V or higher than 4.94V, the LED displays the failure code.

Recommended parts to repair:

- Connection wires
- Sensors
- Indoor main PCB

Troubleshooting

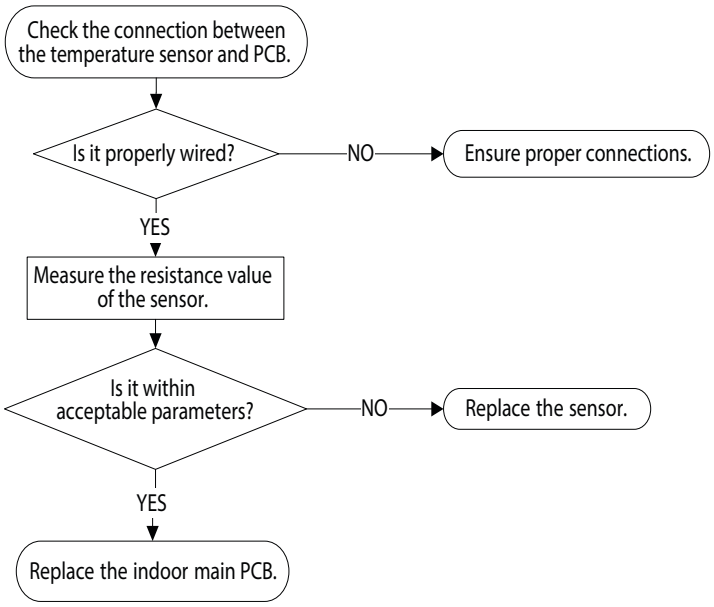

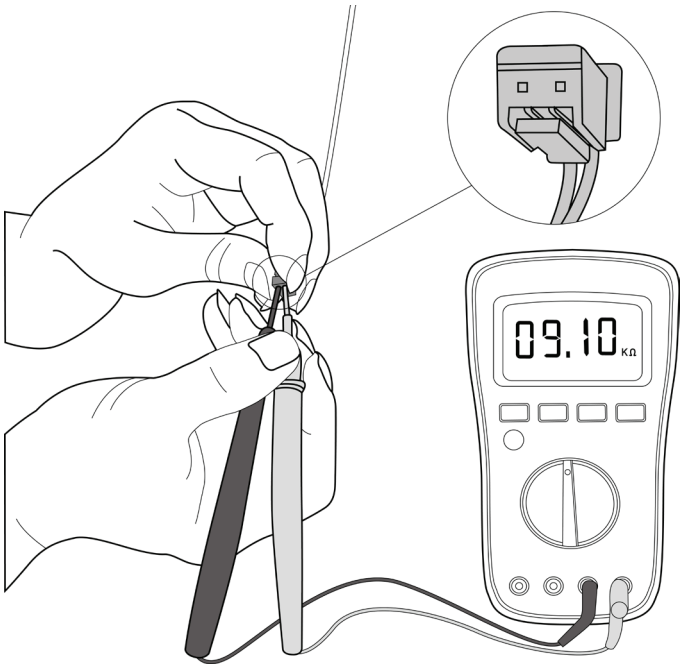

Fig. 21 —Test

NOTE: Figure 21 and the value shown within are for reference only.

DIAGNOSIS AND SOLUTION (CONT)

Outdoor Temperature Sensor Is an Open Circuit or Short Circuited (T3, T4, TP, T2B, TH) (EC53)

Description: If the sampling voltage is lower than 0.06V or higher than 4.94V, the LED displays the failure code.

Recommended parts to repair:

- Connection wires
- Sensors
- outdoor main PCB

Troubleshooting

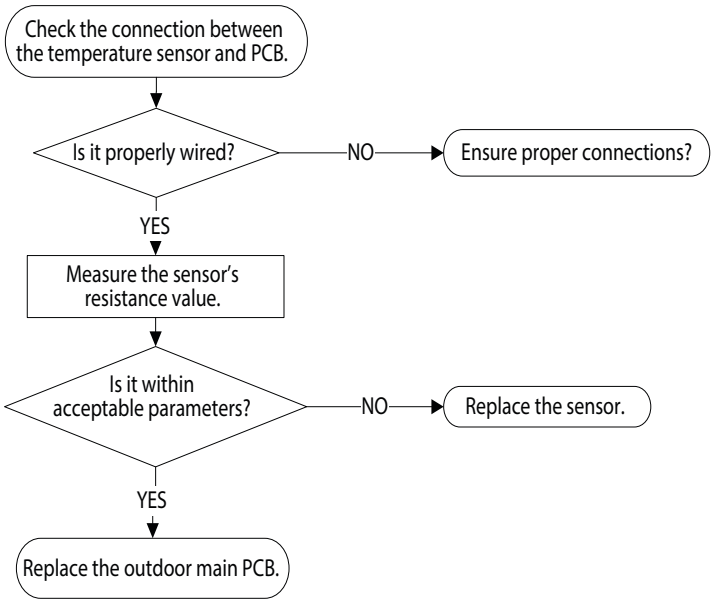

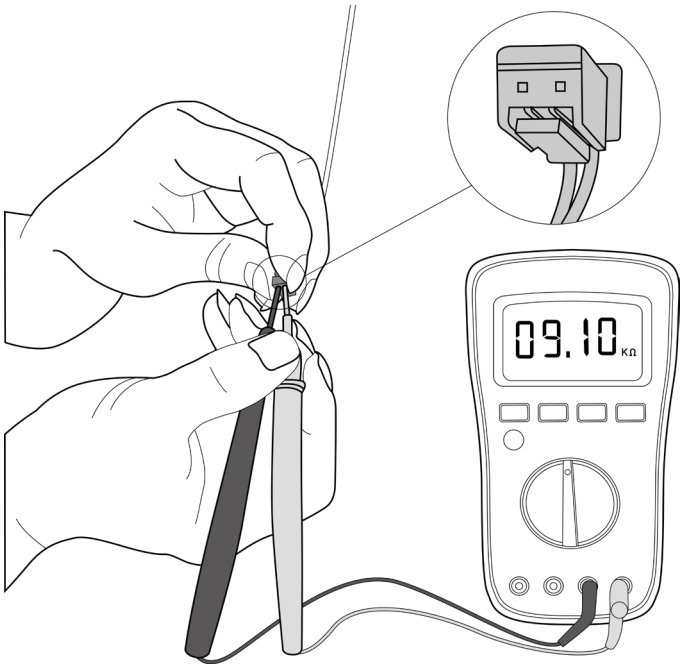

Fig. 22 — Test

NOTE: For certain model, the outdoor PCB could not be removed separately. In this case, the outdoor electric control box should be replaced as a whole. For certain models, the outdoor unit uses a combination sensor, T3,T4 and TP are the same sensor. Figure 22 and the value are for reference only.

DIAGNOSIS AND SOLUTION (CONT)

Refrigerant Leakage Detection (EL0C)

Description: Define the compressor's evaporator coil temperature (T2) starts running as Tcool.

In the initial 5 minutes after the compressor starts, if T2<Tcool-1.8°F (1°C) is not maintained for 4 seconds and the compressor runs at a frequency is higher than 50Hz however it does not maintain for a minimum of three minutes and this issue occurs 3 times, the LED displays the failure code and the unit turns off.

Recommended parts to repair:

- T2 Sensor
- Indoor PCB
- Additional refrigerant

Troubleshooting

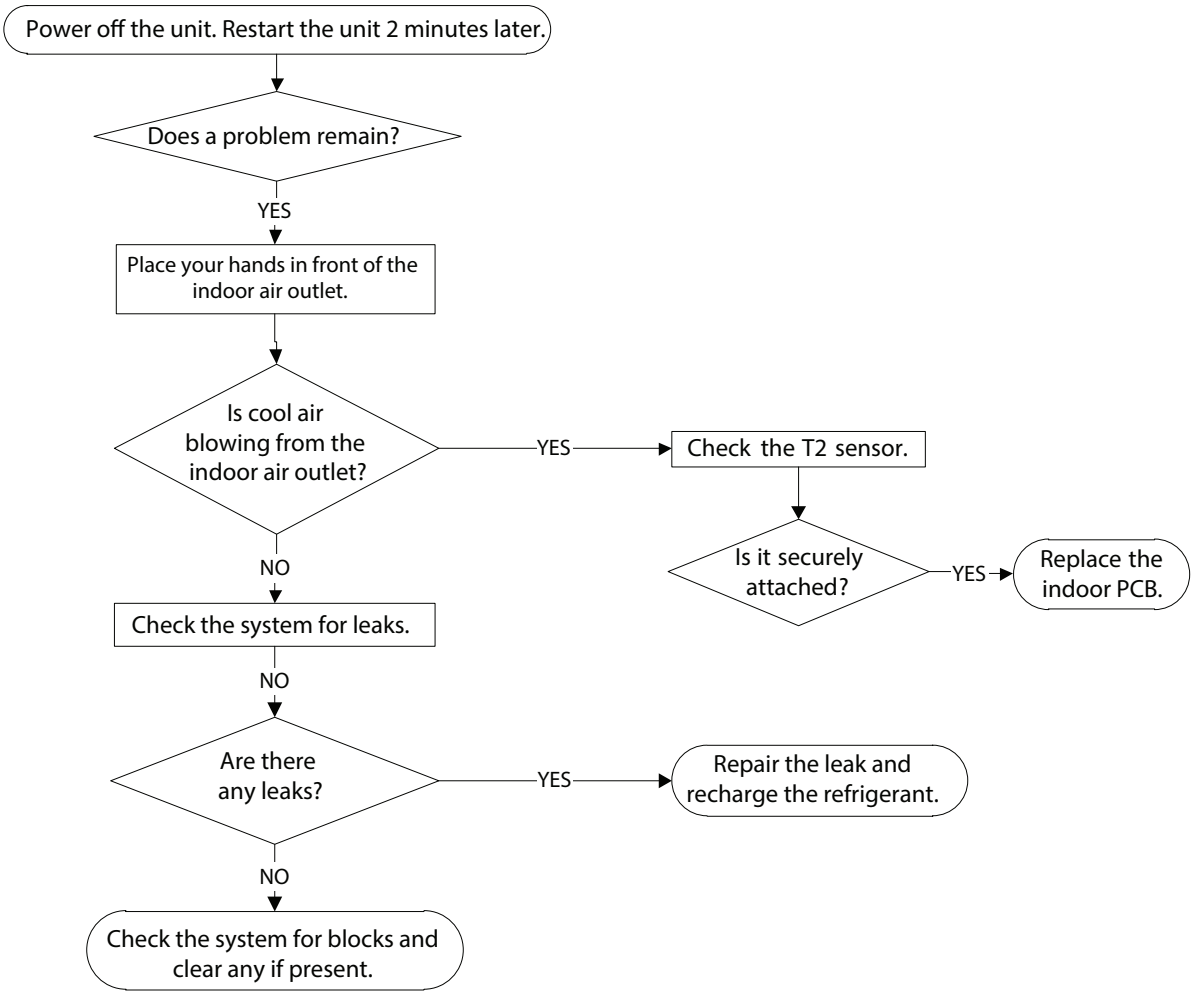

DIAGNOSIS AND SOLUTION (CONT)

Indoor PCB/Display Board Communication Error (EH06)

Description: The indoor PCB does not receive feedback from the display board.

Recommended parts to repair:

- Communication wire
- Indoor PCB
- Display board

Troubleshooting

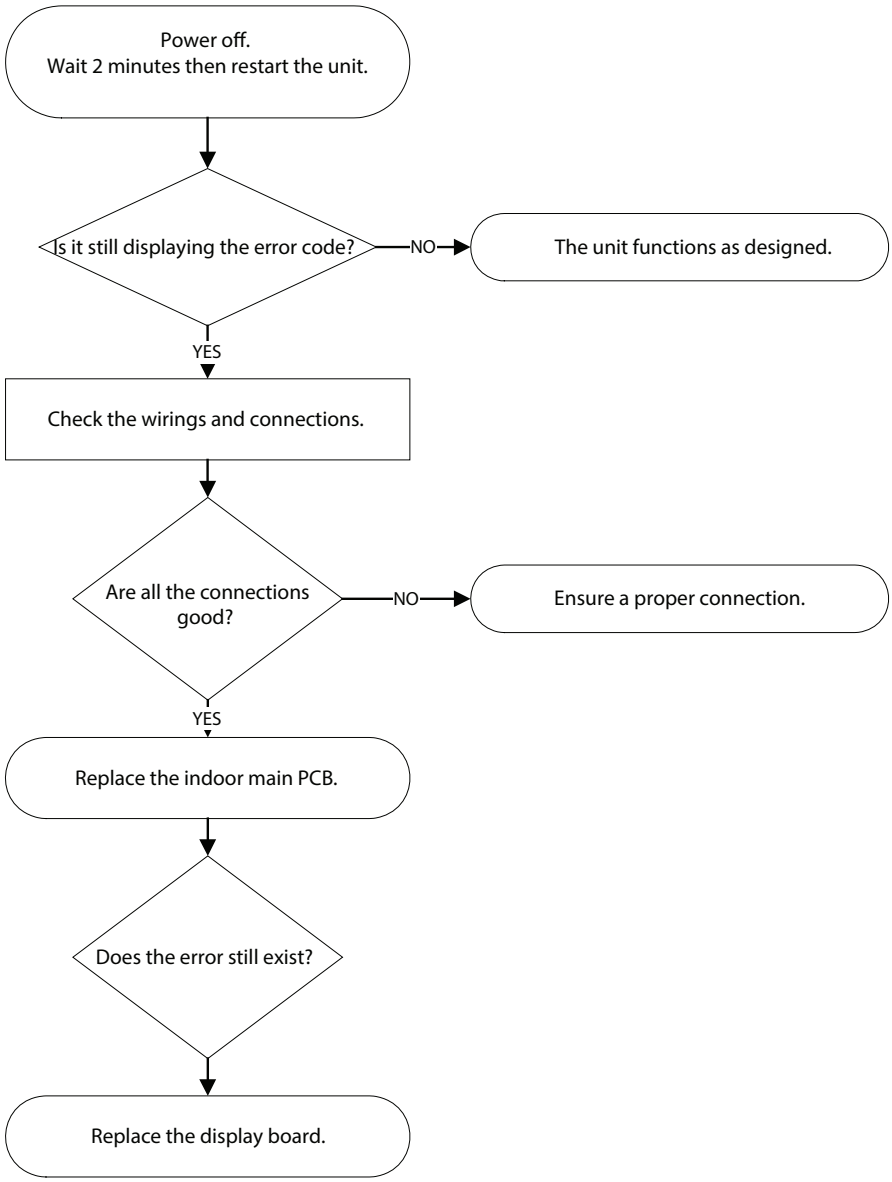

DIAGNOSIS AND SOLUTION (CONT)

Current Overload Protection (PC08)

Description: An abnormal current rise is detected by checking the specified detection circuit.

Recommended parts to repair:

- Communication wires
- Reactor
- Outdoor fan
- Outdoor PCB

Troubleshooting

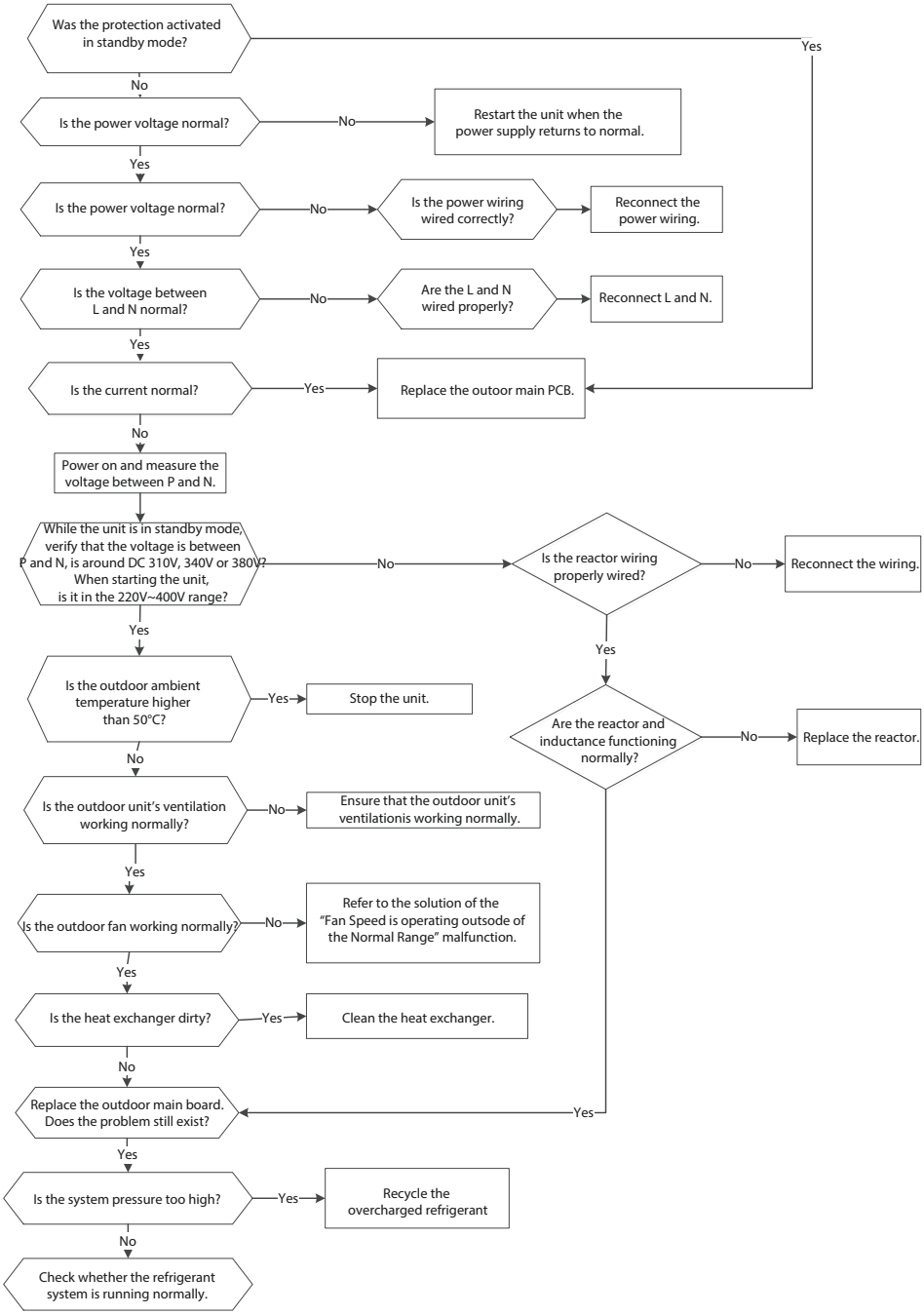

NOTE: For certain models, the outdoor PCB can not be removed separately. In the case, the outdoor electric control box should be replaced as a whole.

DIAGNOSIS AND SOLUTION (CONT)

IPM Malfunction or IGBT over-strong current protection (PC00)

Description: If the IPM sends an abnormal voltage signal to the compressor drive chip, the LED displays the failure code and the unit turns off.

Recommended parts to repair:

- Communication wires
- IPM module board
- Outdoor fan assembly
- Compressor
- Outdoor PCB

Troubleshooting

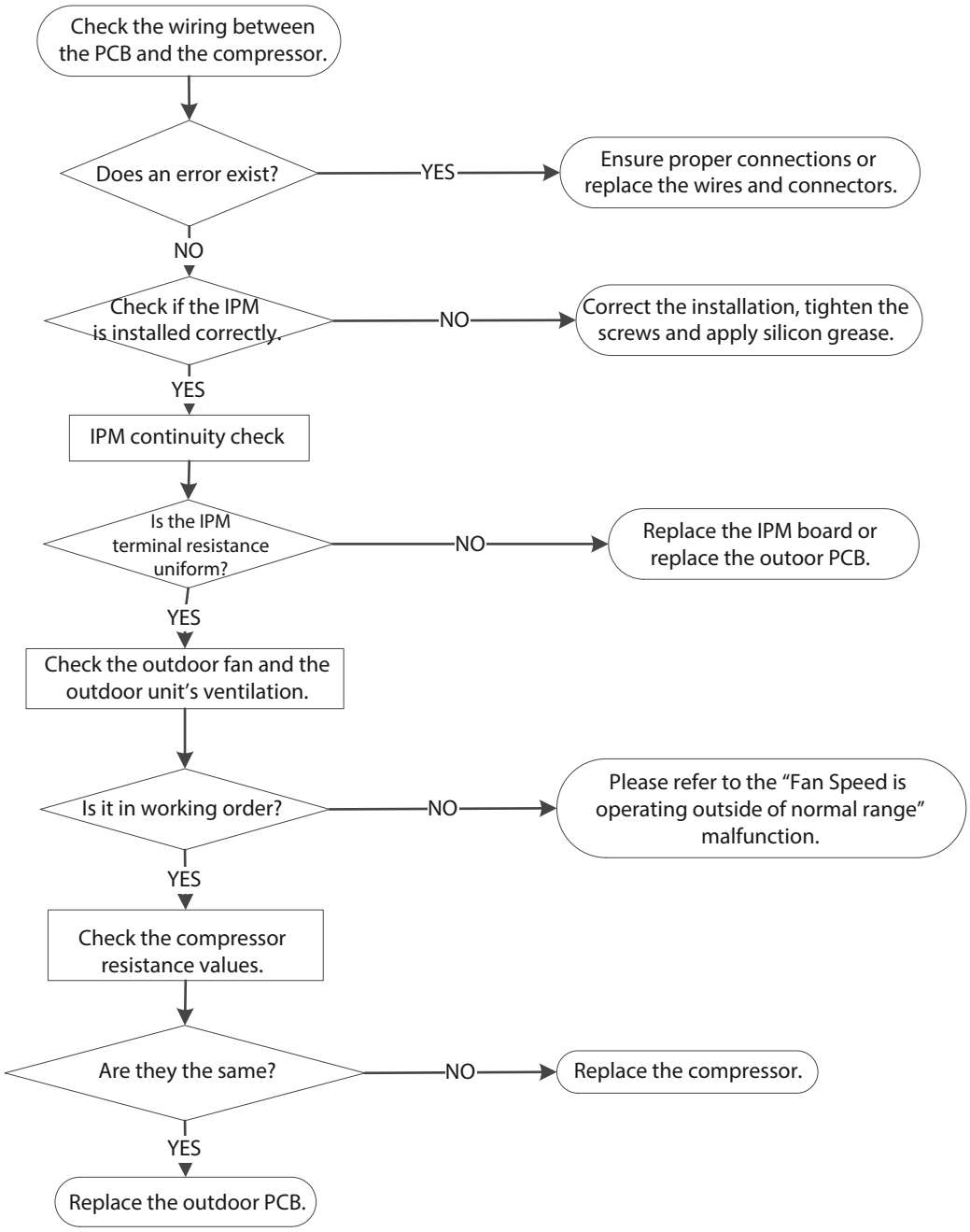

DIAGNOSIS AND SOLUTION (CONT)

Index

IPM Continuity Check

WARNING

Electricity remains in the capacitors even when the power supply is off.

Ensure the capacitors are fully discharged before troubleshooting.

1. Turn off the outdoor unit and disconnect the power supply.
2. Discharge the electrolytic capacitors and ensure all the energy storage has been discharge.
3. Disassemble the outdoor PCB or disassemble the IPM board.
4. Measure the resistance value between P and U (V,W,N), U (V,W) and N.

DIGITAL TESTER		RESISTANCE VALUE	DIGITAL TESTER		RESISTANCE VALUE
(+) Red	(-) Black	∞ (Several MΩ)	(+) Red	(-) Black	∞ (Several MΩ)
P	N		U	N	
	U		V		
	V		W		
	W		-		

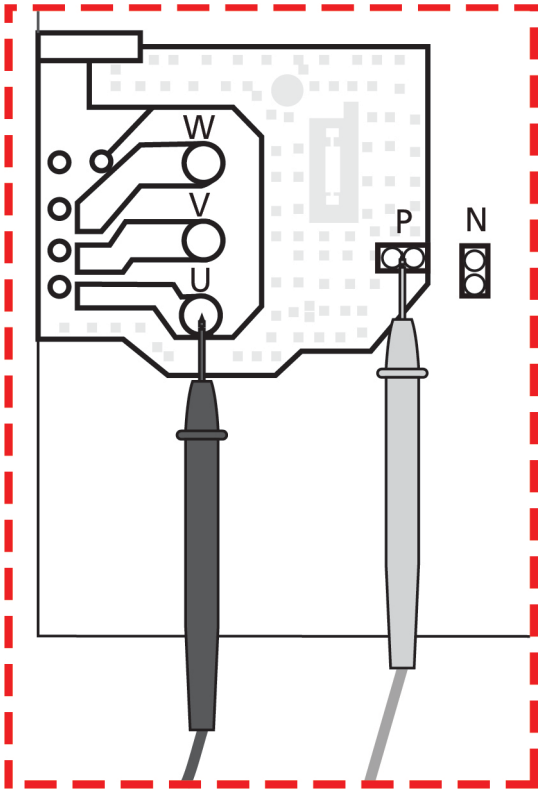

Fig. 23 — N-W

DIAGNOSIS AND SOLUTION (CONT)

Compressor Check

Disconnect the compressor and check the resistance between U-V, V-W and U-W, and all 3 values should be equal. If not, the compressor is faulty and needs to be replaced.

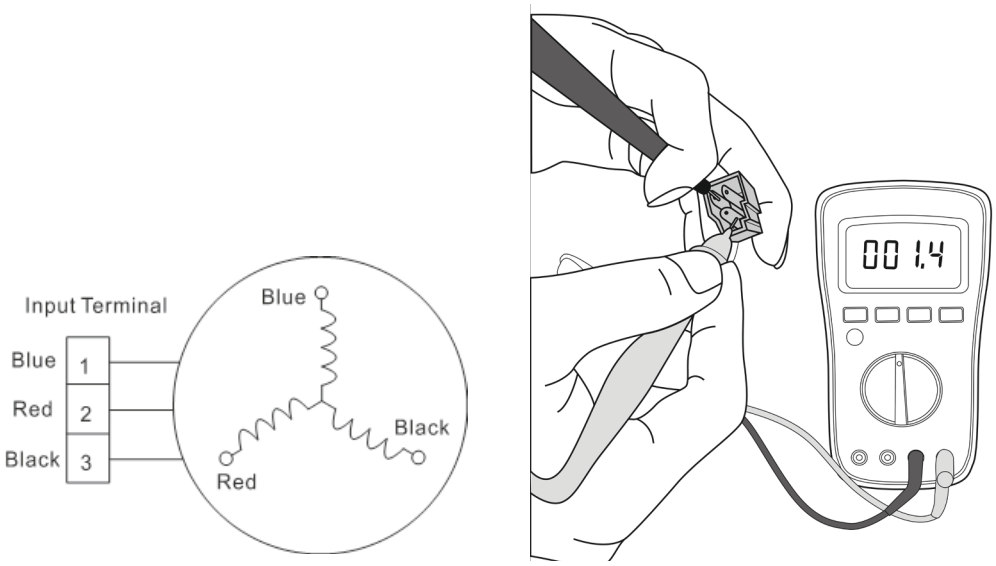

Fig. 24 — Compressor Checks

NOTE: Figure 24 is for reference only.

DIAGNOSIS AND SOLUTION (CONT)

Over voltage or low voltage protection (PC01)

Description: Abnormal increases or decreases in voltage are detected by checking the specified voltage detection circuit.

Recommended parts to repair:

- Power supply wires
- IPM module board
- PCB
- Reactor

Troubleshooting

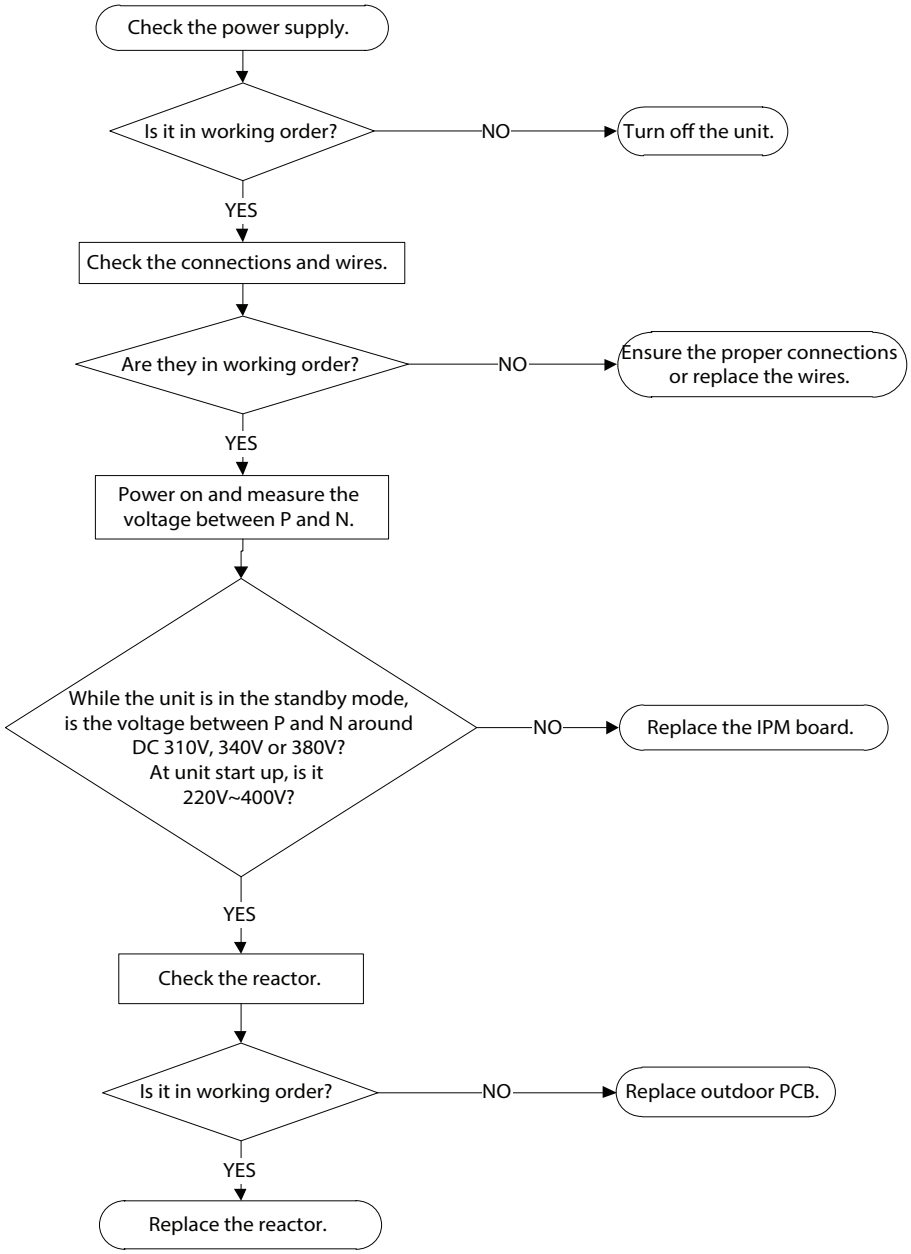

DIAGNOSIS AND SOLUTION (CONT)

Top temperature protection for compressor or High temperature or High pressure protection of IPM module (PC02)

Description: For some models with overload protection, if the sampling voltage is not 5V, the LED displays the failure. If the IPM module temperature is higher than a certain value, the LED displays the failure code. For some models with a high pressure switch, the outdoor pressure switch cuts off the system when the pressure is higher than 4.4 MPa and the LED displays the failure code.

Recommended parts to repair:

- Connection wires
- Outdoor PCB
- IPM module board
- High pressure protector
- System blockages

Troubleshooting

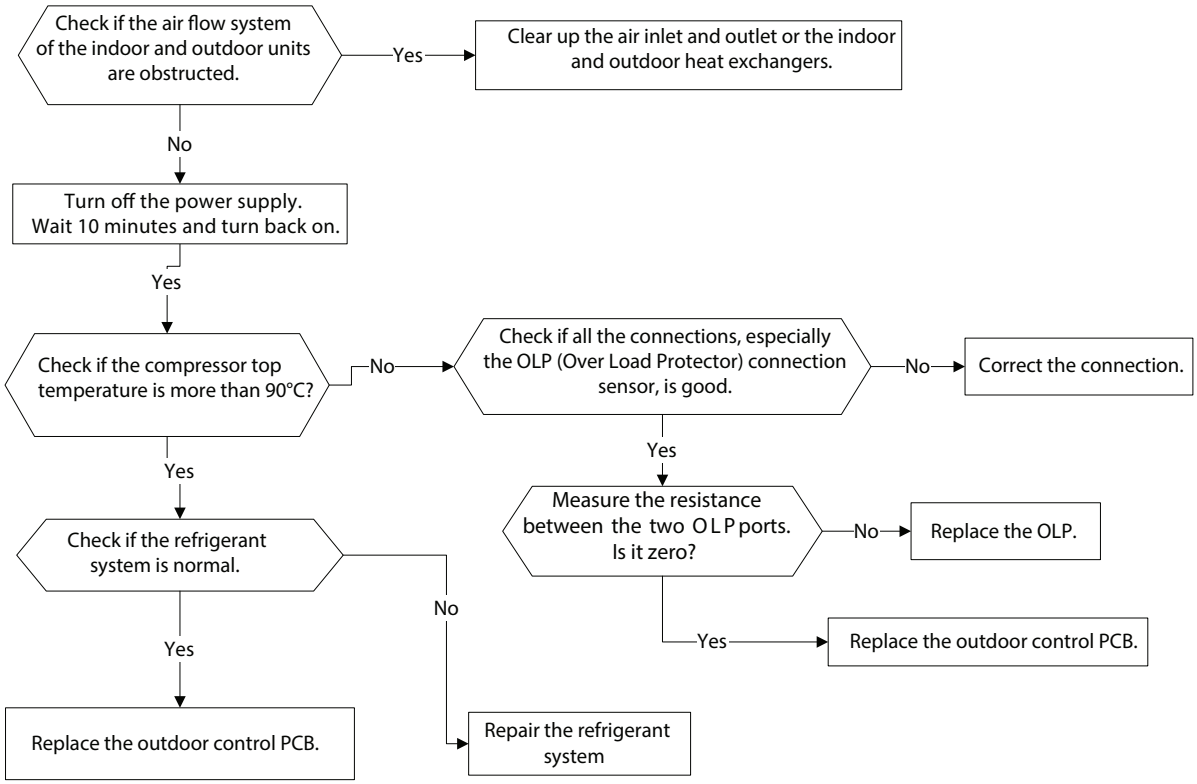

NOTE: For certain models, the outdoor PCB can not be removed separately. In this case, the outdoor electric control box should be replaced as a whole.

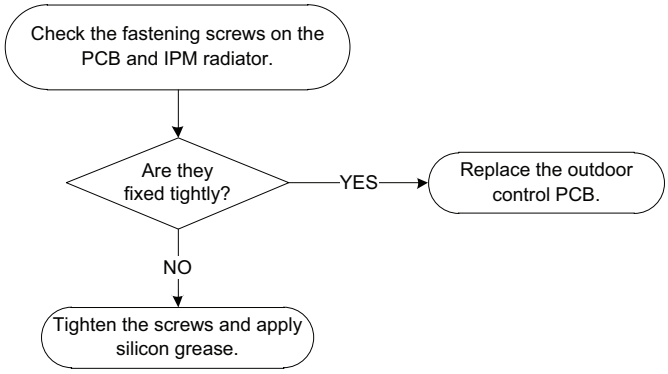

DIAGNOSIS AND SOLUTION (CONT)

Top temperature protection for compressor or High temperature or High pressure protection of IPM module (PC02) (cont.)

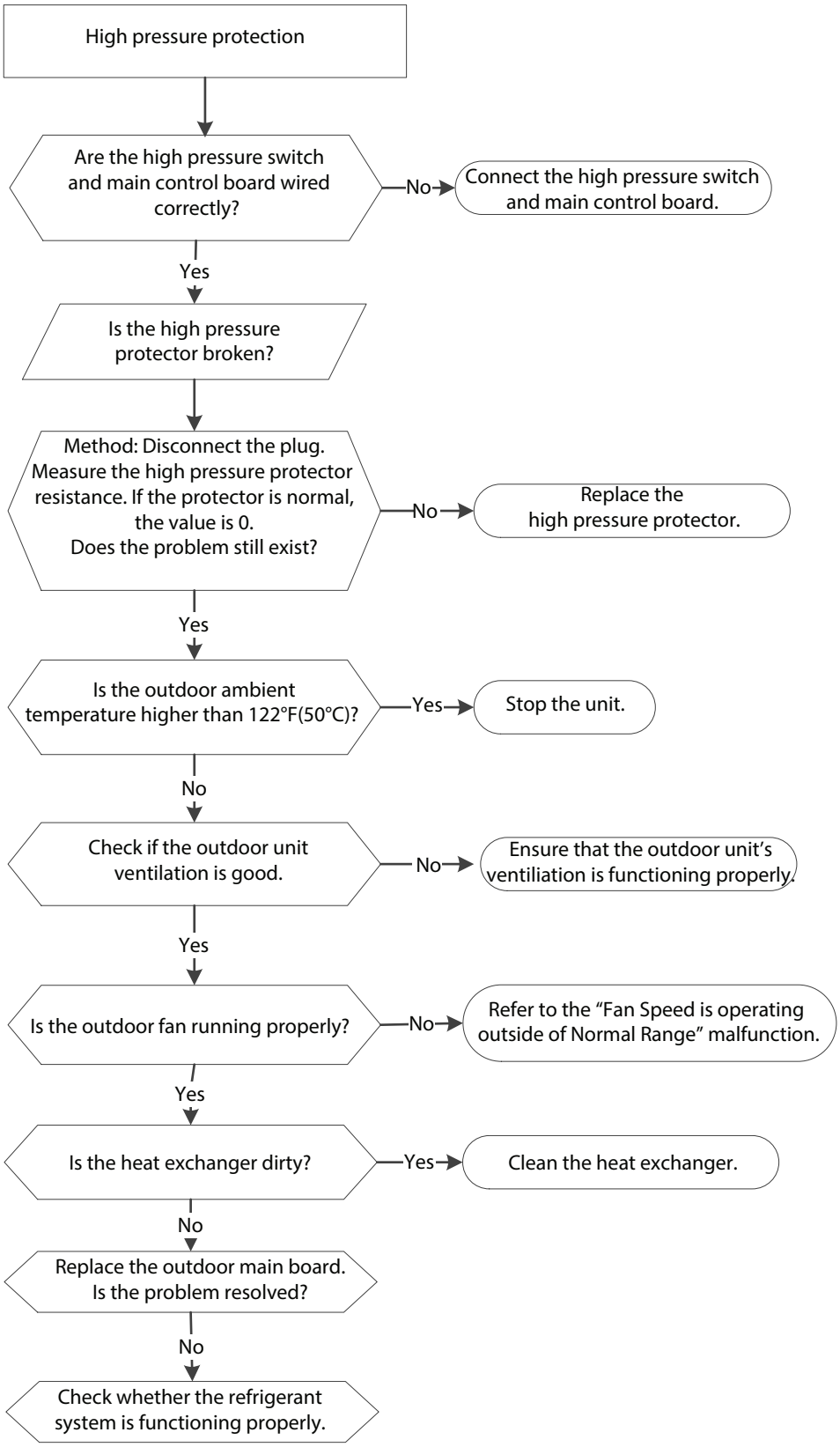

DIAGNOSIS AND SOLUTION (CONT)

Low Pressure Protection (PC03)

Description: The outdoor pressure switch shuts the unit down because the low pressure is lower than 0.13 MPa and the LED displays the failure code.

Recommended parts to repair:

- Connection wires
- Outdoor PCB
- Low pressure protector
- Refrigerant

Troubleshooting

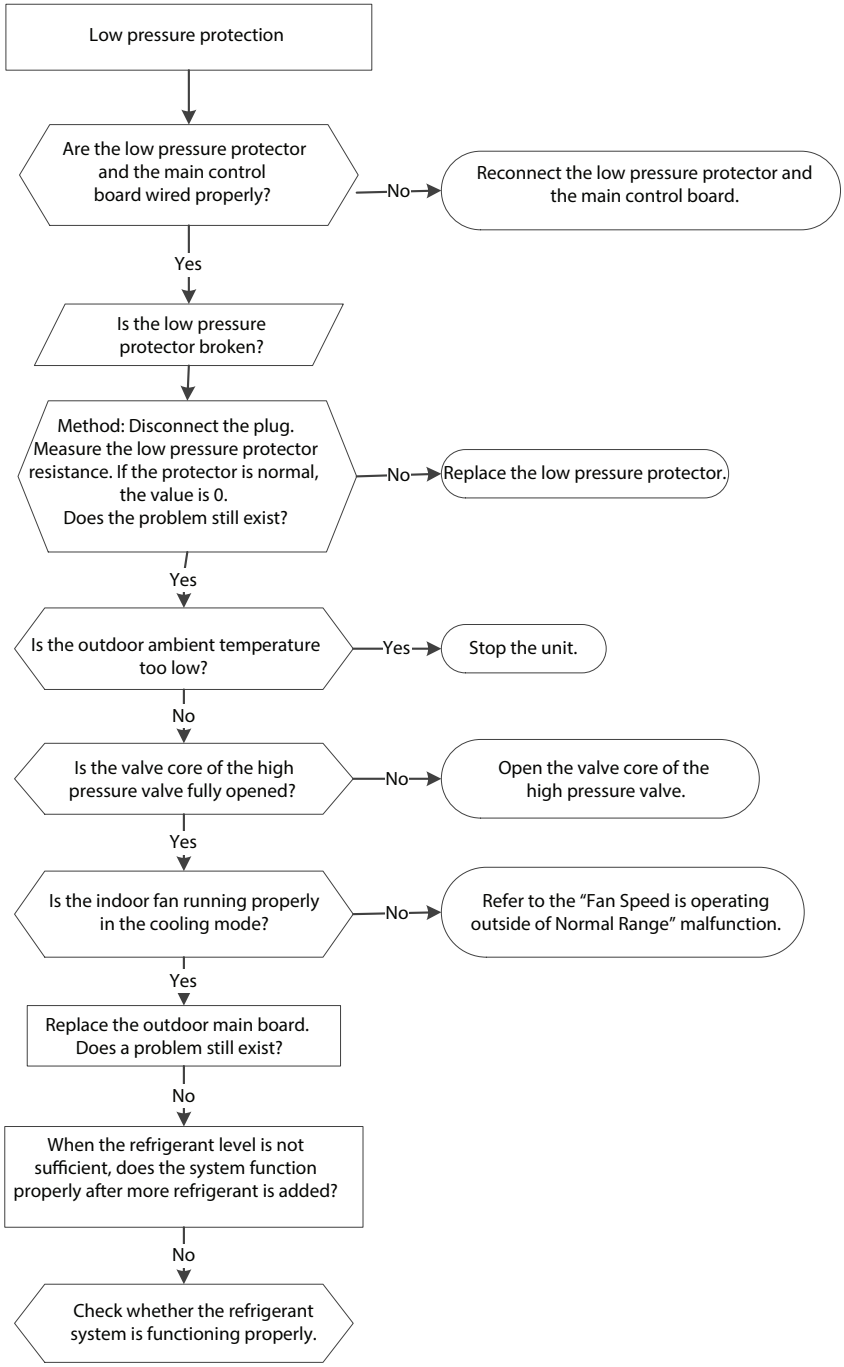

DIAGNOSIS AND SOLUTION (CONT)

Inverter compressor Drive Error (PC04)

Description: An abnormal inverter compressor drive is detected by a special detection circuit, including communication signal detection, voltage detection, compressor rotation and speed signal detection.

Recommended parts to repair:

- Connection wires
- IPM module board
- Outdoor fan assembly
- Compressor
- Outdoor PCB

Troubleshooting

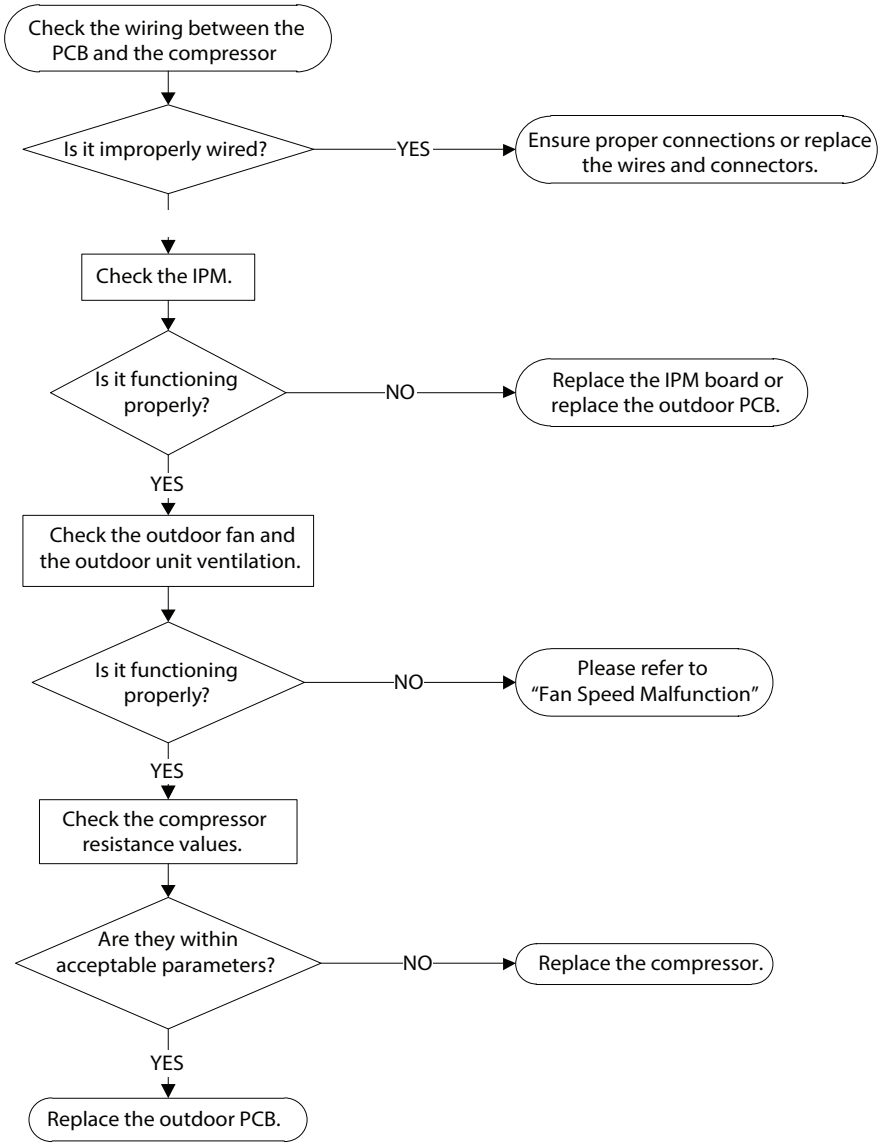

DIAGNOSIS AND SOLUTION (CONT)

Indoor Units Mode Conflict (match with multi outdoor unit)

Description: The indoor units cannot operate in the **COOLING** mode and **HEATING** mode simultaneously. The **HEATING** mode is the priority.

Examples:

- If indoor unit A is operating in the **COOLING** mode or the **FAN** mode, and indoor unit B is set to the **HEATING** mode, unit A will power off and unit B will continue to operate in the **HEATING** mode.
- If indoor unit A is operating in the **HEATING** mode and indoor unit B is set to the **COOLING** mode or fan mode, unit B will change to **STANDBY** mode and unit A will not change modes.

	COOLING MODE	HEATING MODE	FAN	OFF
COOLING MODE	No	Yes	No	No
HEATING MODE	Yes	No	Yes	No
FAN	No	Yes	No	No
OFF	No	No	No	No

NOTE:
No: No mode conflict
Yes: Mode conflict

APPENDICIES

Appendix 1

Table 8 — Temperature Sensor Resistance Value Table for T1, T2, T3, T4 (C--K)

°C	°F	K Ohm	°C	°F	K Ohm	°C	°F	K Ohm	°C	°F	K Ohm
-20	-4	115.266	20	68	12.6431	60	140	2.35774	100	212	0.62973
-19	-2	108.146	21	70	12.0561	61	142	2.27249	101	214	0.61148
-18	0	101.517	22	72	11.5	62	144	2.19073	102	216	0.59386
-17	1	96.3423	23	73	10.9731	63	145	2.11241	103	217	0.57683
-16	3	89.5865	24	75	10.4736	64	147	2.03732	104	219	0.56038
-15	5	84.219	25	77	10	65	149	1.96532	105	221	0.54448
-14	7	79.311	26	79	9.55074	66	151	1.89627	106	223	0.52912
-13	9	74.536	27	81	9.12445	67	153	1.83003	107	225	0.51426
-12	10	70.1698	28	82	8.71983	68	154	1.76647	108	226	0.49989
-11	12	66.0898	29	84	8.33566	69	156	1.70547	109	228	0.486
-10	14	62.2756	30	86	7.97078	70	158	1.64691	110	230	0.47256
-9	16	58.7079	31	88	7.62411	71	160	1.59068	111	232	0.45957
-8	18	56.3694	32	90	7.29464	72	162	1.53668	112	234	0.44699
-7	19	52.2438	33	91	6.98142	73	163	1.48481	113	235	0.43482
-6	21	49.3161	34	93	6.68355	74	165	1.43498	114	237	0.42304
-5	23	46.5725	35	95	6.40021	75	167	1.38703	115	239	0.41164
-4	25	44	36	97	6.13059	76	169	1.34105	116	241	0.4006
-3	27	41.5878	37	99	5.87359	77	171	1.29078	117	243	0.38991
-2	28	39.8239	38	100	5.62961	78	172	1.25423	118	244	0.37956
-1	30	37.1988	39	102	5.39689	79	174	1.2133	119	246	0.36954
0	32	35.2024	40	104	5.17519	80	176	1.17393	120	248	0.35982
1	34	33.3269	41	106	4.96392	81	178	1.13604	121	250	0.35042
2	36	31.5635	42	108	4.76253	82	180	1.09958	122	252	0.3413
3	37	29.9058	43	109	4.5705	83	181	1.06448	123	253	0.33246
4	39	28.3459	44	111	4.38736	84	183	1.03069	124	255	0.3239
5	41	26.8778	45	113	4.21263	85	185	0.99815	125	257	0.31559
6	43	25.4954	46	115	4.04589	86	187	0.96681	126	259	0.30754
7	45	24.1932	47	117	3.88673	87	189	0.93662	127	261	0.29974
8	46	22.5662	48	118	3.73476	88	190	0.90753	128	262	0.29216
9	48	21.8094	49	120	3.58962	89	192	0.8795	129	264	0.28482
10	50	20.7184	50	122	3.45097	90	194	0.85248	130	266	0.2777
11	52	19.6891	51	124	3.31847	91	196	0.82643	131	268	0.27078
12	54	18.7177	52	126	3.19183	92	198	0.80132	132	270	0.26408
13	55	17.8005	53	127	3.07075	93	199	0.77709	133	271	0.25757
14	57	16.9341	54	129	2.95896	94	201	0.75373	134	273	0.25125
15	59	16.1156	55	131	2.84421	95	203	0.73119	135	275	0.24512
16	61	15.3418	56	133	2.73823	96	205	0.70944	136	277	0.23916
17	63	14.6181	57	135	2.63682	97	207	0.68844	137	279	0.23338
18	64	13.918	58	136	2.53973	98	208	0.66818	138	280	0.22776
19	66	13.2631	59	138	2.44677	99	210	0.64862	139	282	0.22231

Manufacturer reserves the right to change, at any time, specifications and designs without notice and without obligations.

Appendix 2

Table 9 — Temperature Sensor Resistance Value Table for T5 (TP) (C--K)

° C	° F	K Ohm	° C	° F	K Ohm	° C	° F	K Ohm	° C	° F	K Ohm
-20	-4	542.7	20	68	68.66	60	140	13.59	100	212	3.702
-19	-2	511.9	21	70	65.62	61	142	13.11	101	214	3.595
-18	0	483	22	72	62.73	62	144	12.65	102	216	3.492
-17	1	455.9	23	73	59.98	63	145	12.21	103	217	3.392
-16	3	430.5	24	75	57.37	64	147	11.79	104	219	3.296
-15	5	406.7	25	77	54.89	65	149	11.38	105	221	3.203
-14	7	384.3	26	79	52.53	66	151	10.99	106	223	3.113
-13	9	363.3	27	81	50.28	67	153	10.61	107	225	3.025
-12	10	343.6	28	82	48.14	68	154	10.25	108	226	2.941
-11	12	325.1	29	84	46.11	69	156	9.902	109	228	2.86
-10	14	307.7	30	86	44.17	70	158	9.569	110	230	2.781
-9	16	291.3	31	88	42.33	71	160	9.248	111	232	2.704
-8	18	275.9	32	90	40.57	72	162	8.94	112	234	2.63
-7	19	261.4	33	91	38.89	73	163	8.643	113	235	2.559
-6	21	247.8	34	93	37.3	74	165	8.358	114	237	2.489
-5	23	234.9	35	95	35.78	75	167	8.084	115	239	2.422
-4	25	222.8	36	97	34.32	76	169	7.82	116	241	2.357
-3	27	211.4	37	99	32.94	77	171	7.566	117	243	2.294
-2	28	200.7	38	100	31.62	78	172	7.321	118	244	2.233
-1	30	190.5	39	102	30.36	79	174	7.086	119	246	2.174
0	32	180.9	40	104	29.15	80	176	6.859	120	248	2.117
1	34	171.9	41	106	28	81	178	6.641	121	250	2.061
2	36	163.3	42	108	26.9	82	180	6.43	122	252	2.007
3	37	155.2	43	109	25.86	83	181	6.228	123	253	1.955
4	39	147.6	44	111	24.85	84	183	6.033	124	255	1.905
5	41	140.4	45	113	23.89	85	185	5.844	125	257	1.856
6	43	133.5	46	115	22.89	86	187	5.663	126	259	1.808
7	45	127.1	47	117	22.1	87	189	5.488	127	261	1.762
8	46	121	48	118	21.26	88	190	5.32	128	262	1.717
9	48	115.2	49	120	20.46	89	192	5.157	129	264	1.674
10	50	109.8	50	122	19.69	90	194	5	130	266	1.632
11	52	104.6	51	124	18.96	91	196	4.849			
12	54	99.69	52	126	18.26	92	198	4.703			
13	55	95.05	53	127	17.58	93	199	4.562			
14	57	90.66	54	129	16.94	94	201	4.426			
15	59	86.49	55	131	16.32	95	203	4.294			
16	61	82.54	56	133	15.73	96	205	4.167			
17	63	78.79	57	135	15.16	97	207	4.045			
18	64	75.24	58	136	14.62	98	208	3.927			
19	66	71.86	59	138	14.09	99	210	3.812			

Manufacturer reserves the right to change, at any time, specifications and designs without notice and without obligations.

Appendix 3

Table 10 — ΔT(°XF)=9XT(°XC)/5

° C	° F	° C	° F	° C	° F	° C	° F	° C	° F
-5	23	21	69.8	51	123.8	82	179.6	113	235.4
-4	24.8	22	71.6	52	125.6	83	181.4	114	237.2
-3	26.6	23	73.4	53	127.4	84	183.2	115	239
-2	28.4	24	75.2	54	129.2	85	185	116	240.8
-1	30.2	25	77	55	131	86	186.8	117	242.6
0	32	25.5	77.9	56	132.8	87	188.6	118	244.4
0.5	32.9	26	78.8	57	134.6	88	190.4	119	246.2
1	33.8	27	80.6	58	136.4	89	192.2	120	248
1.5	34.7	28	82.4	59	138.2	90	194	121	249.8
2	35.6	29	84.2	60	140	91	195.8	122	251.6
2.5	36.5	30	86	61	141.8	92	197.6	123	253.4
3	37.4	31	87.8	62	143.6	93	199.4	124	255.2
3.5	38.3	32	89.6	63	145.4	94	201.2	125	257
4	39.2	33	91.4	64	147.2	95	203	126	258.8
4.5	40.1	34	93.2	65	149	96	204.8	127	260.6
5	41	35	95	66	150.8	97	206.6	128	262.4
6	42.8	36	96.8	67	152.6	98	208.4	129	264.2
7	44.6	37	98.6	68	154.4	99	210.2	130	266
8	46.4	38	100.4	69	156.2	100	212	131	267.8
9	48.2	39	102.2	70	158	101	213.8	132	269.6
10	50	40	104	71	159.8	102	215.6	133	271.4
11	51.8	41	105.8	72	161.6	103	217.4	134	273.2
12	53.6	42	107.6	73	163.4	104	219.2	135	275
13	55.4	43	109.4	74	165.2	105	221	136	276.8
14	57.2	44	111.2	75	167	106	222.8	137	278.6
15	59	45	113	76	168.8	107	224.6	138	280.4
16	60.8	46	114.8	77	170.6	108	226.4	139	282.2
17	62.6	47	116.6	78	172.4	109	228.2	140	284
18	64.4	48	118.4	79	174.2	110	230	141	285.8
19	66.2	49	120.2	80	176	111	231.8	142	287.6
20	68	50	122	81	177.8	112	233.6	143	289.4

IPM Continuity Check

Turn off the power, let the large capacity electrolytic capacitors discharge completely, and dismount the IPM. Use a digital tester to measure the resistance between P and UVWN; UVW and N.

Table 11 — Digital Tester

DIGITAL TESTER		NORMAL RESISTANCE VALUE	DIGITAL TESTER		NORMAL RESISTANCE VALUE
(+) Red	(-) Black	∞ (Several MΩ)	(+) Red	(-) Black	∞ (Several MΩ)
P	N		U	N	
	U		V		
	V		W		
	W		(+) Red		

DISASSEMBLY INSTRUCTIONS

Front Panel

NOTE: This part is for reference only and the photos may differ from your actual unit.

Procedure	Illustration
1) Place your hands along the filter's sides, pull the filter gently along the vertical direction, and then remove it.	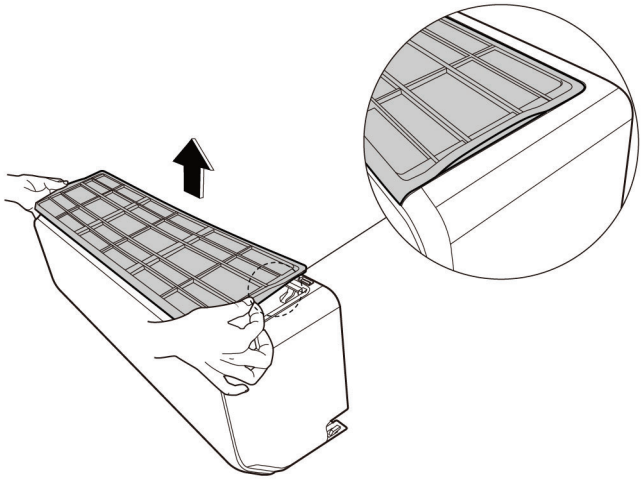
2) Open the horizontal louver and push the locker towards the right to open. 3) Bend the horizontal louver slightly to loosen the hooks, then remove the horizontal louver.	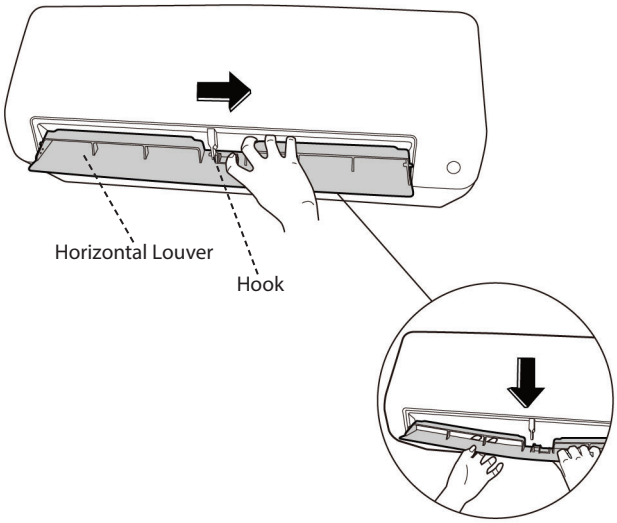

DISASSEMBLY INSTRUCTIONS (CONT)

Procedure	Illustration
4) Open the panel assembly, move the slider to secure the panel.	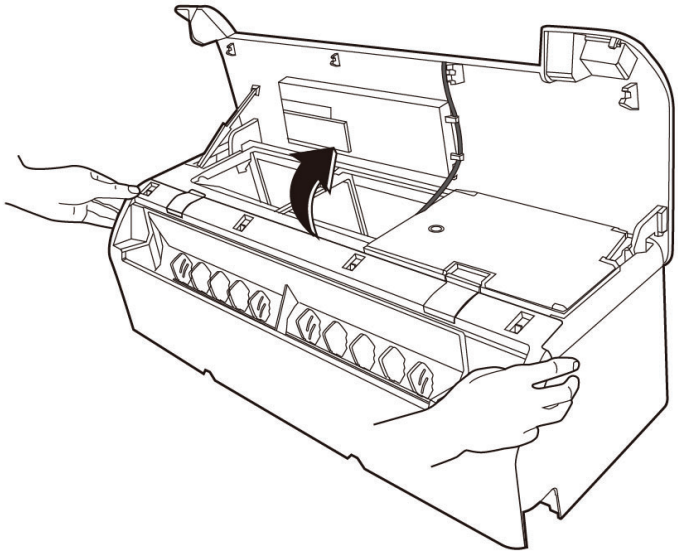
5) Open the two stop blocks of the panel frame assembly. 6) Remove 1 screw in the panel frame.	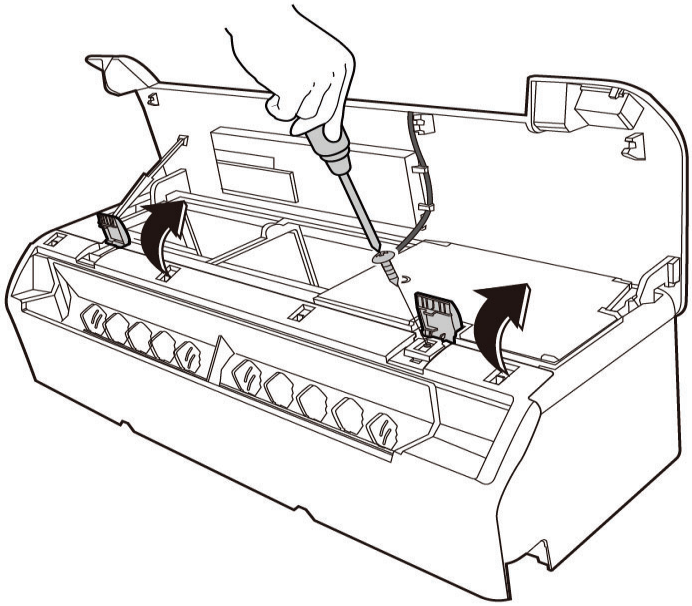

DISASSEMBLY INSTRUCTIONS (CONT)

Procedure	Illustration
7) Pull the two sides of the bottom panel along the direction shown in the image to the right to remove it.	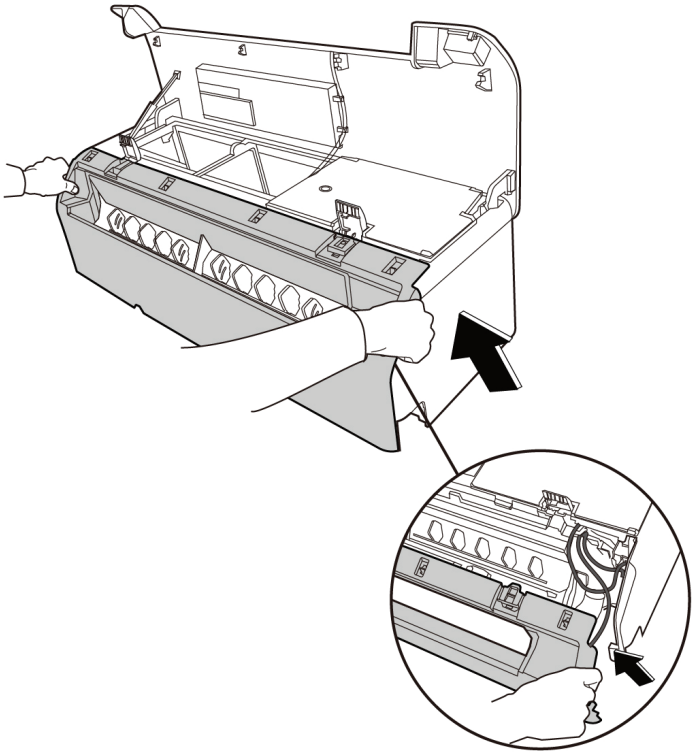
8) Pull the panel's support bar to remove it. 9) Remove the panel assembly. Caution: If you want to close the panel, you must bend the middle of the support bar, otherwise it will break. For 6K~18K models, the support bar is located on the left of the unit. For 24K and up, it it located in the middle of the unit. 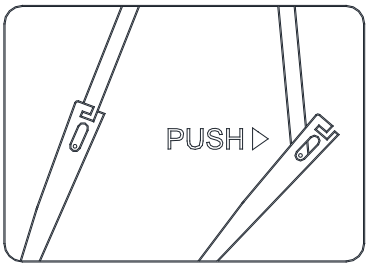 	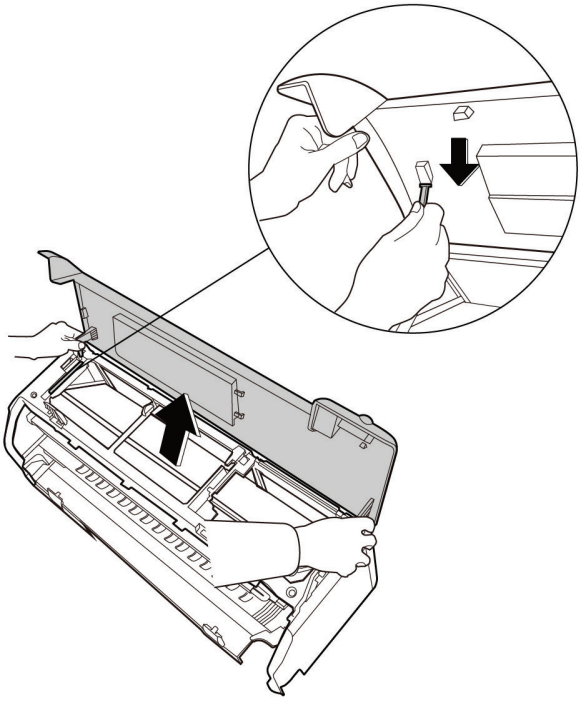

DISASSEMBLY INSTRUCTIONS (CONT)

Procedure	Illustration
10) Remove 1 screw from the display board. 11) Rotate the display board subassembly in the direction shown in the picture to the right. 12) Pull the four clips to remove the display board.	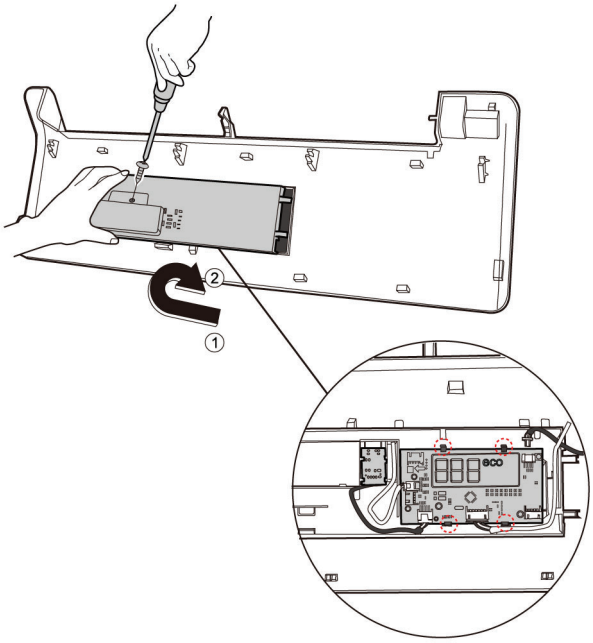

DISASSEMBLY INSTRUCTIONS (CONT)

Electrical parts (Anti-static gloves must be worn.)

Procedure	Illustration
1) Pull the two ends of the electronic control box cover with your thumbs to open. 2) Raise the support bar to secure the cover.	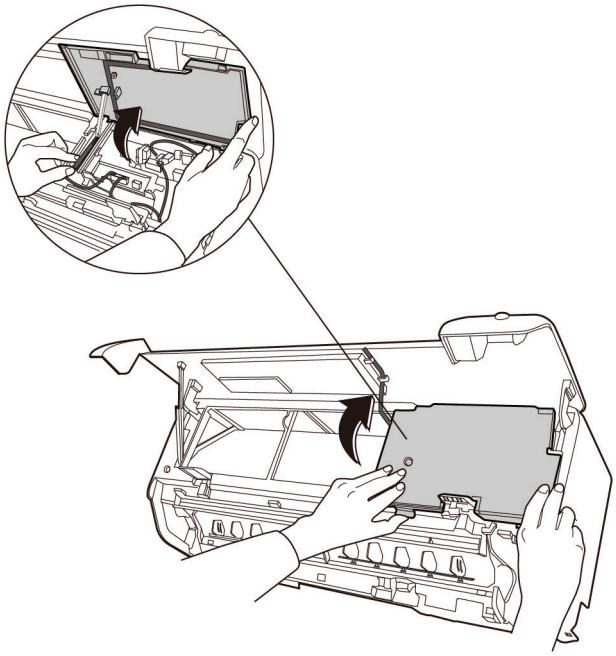
3) Pull the electrical control box holder to remove it.	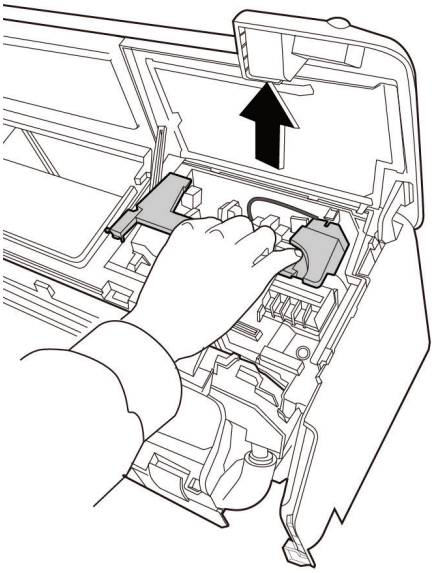

DISASSEMBLY INSTRUCTIONS (CONT)

Procedure	Illustration
4) Disconnect the wires.	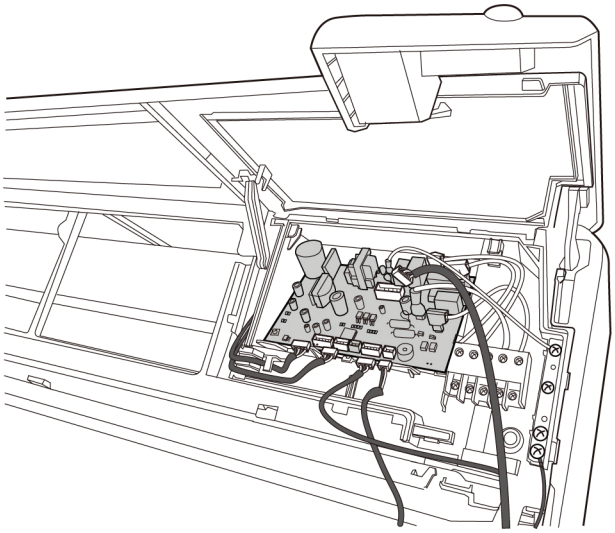
5) Remove one screw used for the ground connection. 6) Pull two clips of the electronic control box along the direction shown in the picture to the right to remove the main control board. If you want to repair the main control board assembly, perform steps 1 through 6. If you want to repair the electrical control box subassembly, perform steps 7-10.	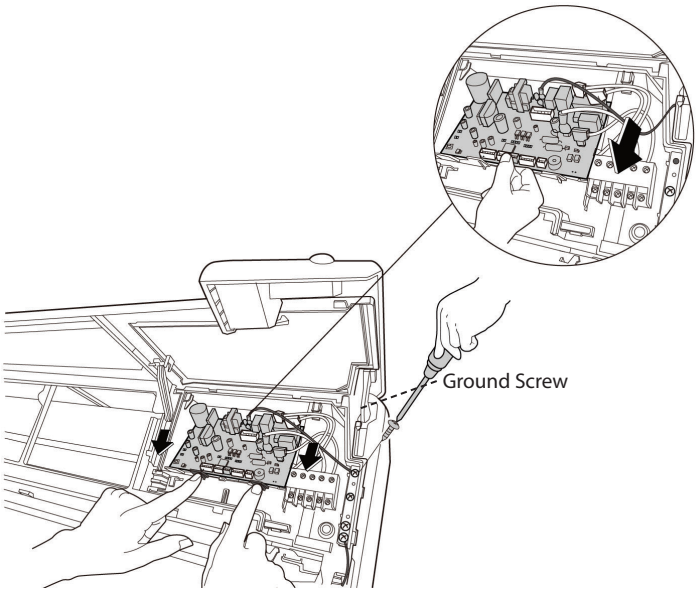

DISASSEMBLY INSTRUCTIONS (CONT)

Procedure	Illustration
7) Remove the other screw used for the ground connection. 8) Collapse the support bar. 9) Pull the electronic control box cover along the direction shown in the image to the right to remove it.	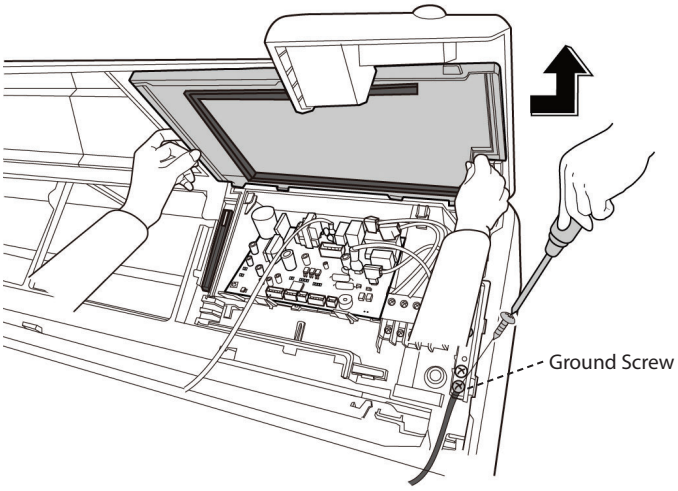
10) Remove one screw then pull out the electronic control box subassembly.	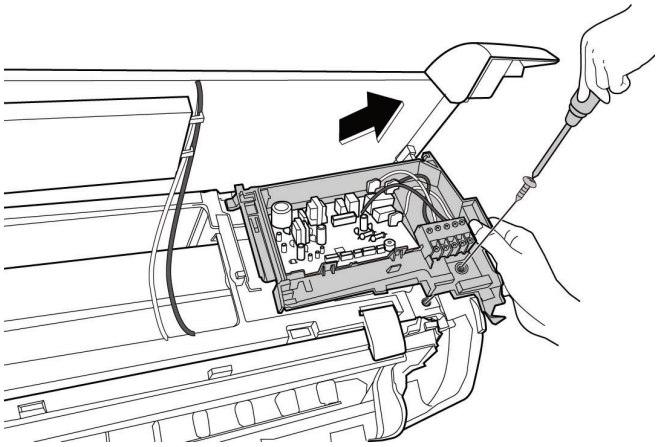

DISASSEMBLY INSTRUCTIONS (CONT)

Evaporator

NOTE: Remove the front panel, electrical parts and the fan.

Procedure	Illustration
1) Remove the 2 screws and then remove the panel frame assembly.	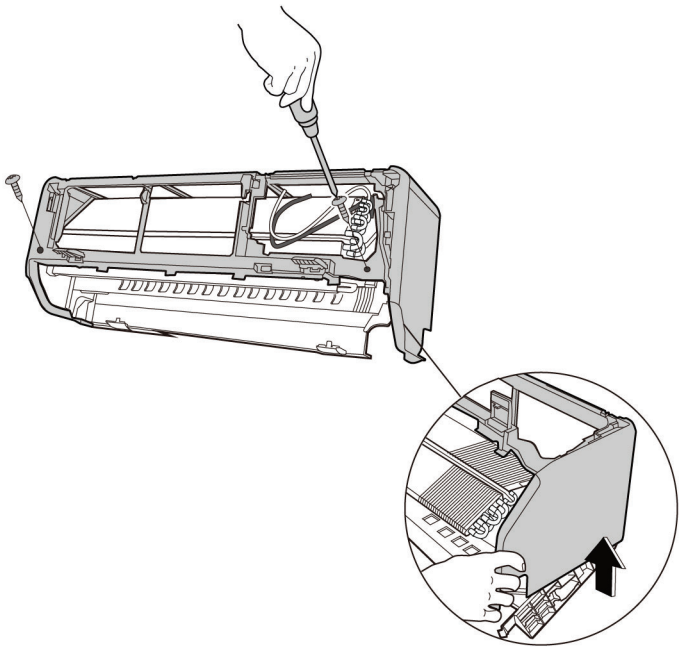
2) Disassemble the pipe clamp board.	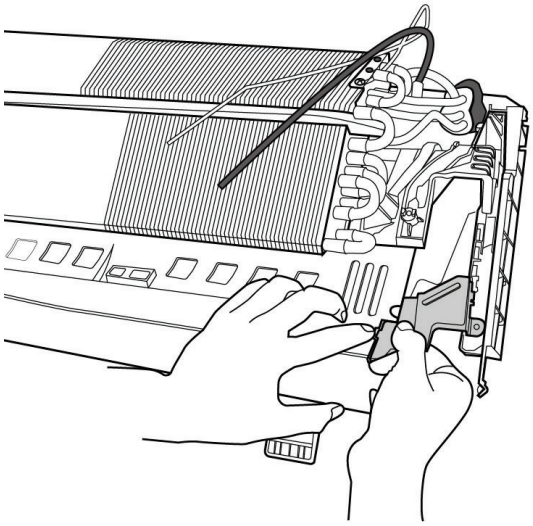

DISASSEMBLY INSTRUCTIONS (CONT)

Procedure	Illustration
3) Remove the screw (1) on the evaporator located at the left fixed plate. 4) Remove the screw (1) on the evaporator located on the right side.	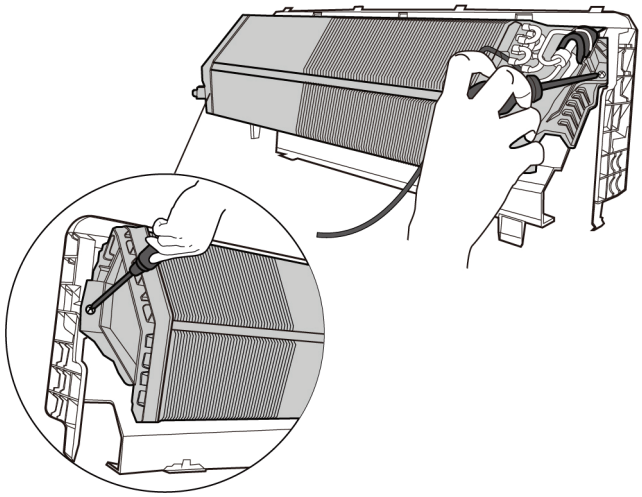
5) Bend the piping carefully, separate the chassis assembly (above) and the evaporator, then remove the evaporator.	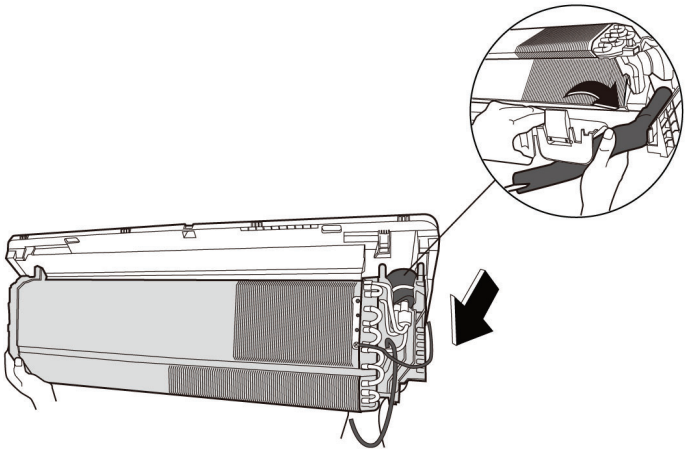

DISASSEMBLY INSTRUCTIONS (CONT)
Fan Motor and Fan

Procedure	Illustration
1) Open the two stop blocks of the chassis assembly (see picture on the right). 2) Remove the chassis assembly (below) along the direction (see picture on the right).	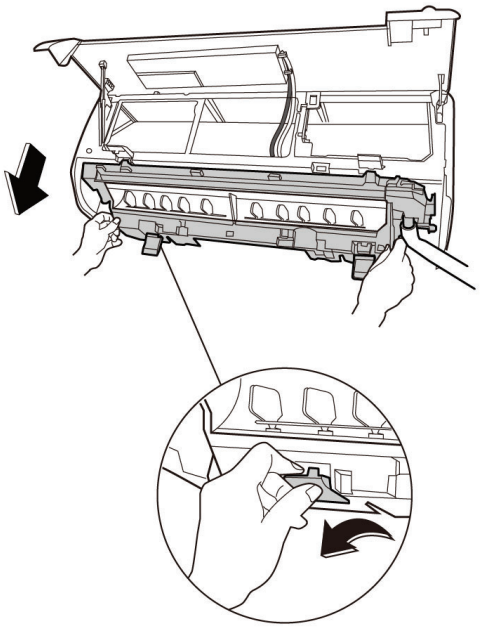
3) Remove the two screws and remove the fan motor board.	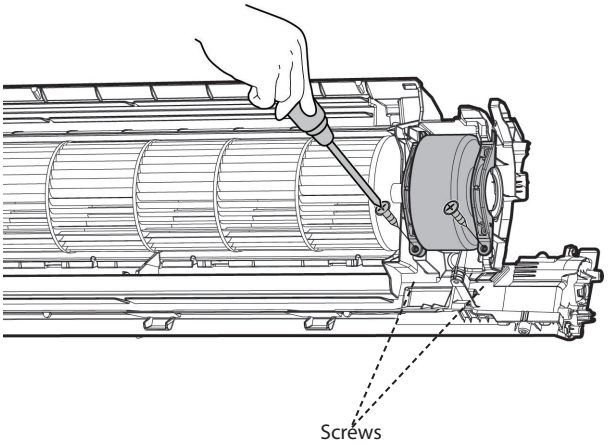

DISASSEMBLY INSTRUCTIONS (CONT)

Procedure	Illustration
4) Remove the bearing sleeve.	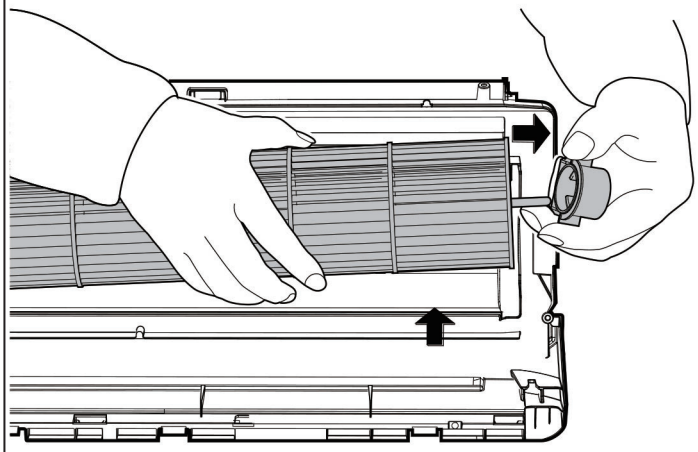
5) Remove the screw. 6) Pull out the fan motor and the fan assembly from the side.	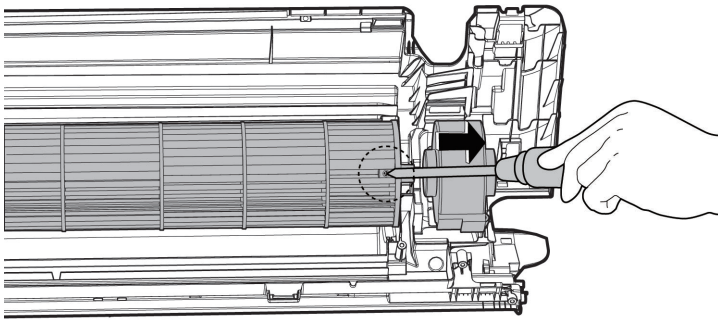

© 2021 Carrier. All rights reserved.

Manufacturer reserves the right to change, at any time, specifications and designs without notice and without obligations.