38AUZ / 38AUD
60 Hz Air Cooled Condensing Unit
Puron® (R−410A) Refrigerant
6 to 20 Nominal Tons

Carrier
turn to the experts

Product Data

Gemini

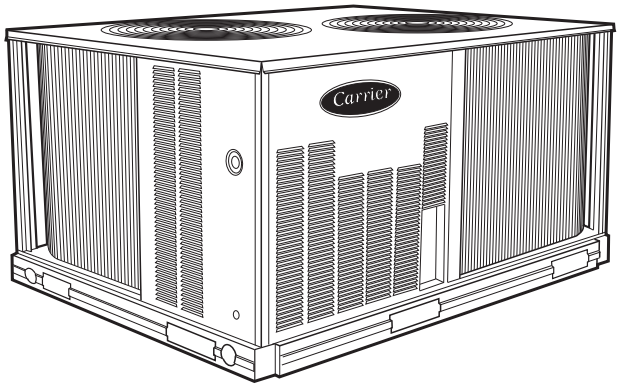

C09227

38AUZ07-14 shown

ASHRAE 90.1 COMPLIANT

Puron™
the environmentally sound refrigerant

Carrier's air-cooled air conditioning split systems:

- provide a logical solution for commercial needs
- have a rugged, dependable construction
- are available in single and circuit scroll compressor capacity control
- have cooling capability up to 125°F (52°C) ambient and down to 40°F (4°C) ambient standard

FEATURES / BENEFITS

The Gemini 38AU series outdoor air cooled condensing units matched with Carrier's 40RU series indoor air handlers offer a wide variety of options for your HVAC application needs. Whether it's first cost with the 38AU single compressor models or superior part load performance from the two compressor models, this series is designed for long, dependable operation as a rooftop or on-the-ground installation. All Gemini 38AU and 40RU series units use environmentally sound Puron R-410A refrigerant. Together, they create a reliable split system that provides easy solutions to a wide range of commercial HVAC needs.

Constructed for long life

The 38AUZ single circuit and 38AUD dual circuit, scroll compressor models are designed and built to last. The high efficient designed outdoor coil construction allows for a more efficient design in a smaller cabinet size that utilizes an overall reduction in refrigerant charge. Where conditions require, special coil coating coil protection option is available. Cabinets are constructed of prepainted galvanized steel, delivering unparalleled protection from the environment. Inside and outside surfaces are protected to ensure long life, good looks, and reliable operation. Safety controls are used for enhanced system protection and reliability.

Each unit utilizes the Comfort Alert diagnostic and troubleshoot control system. This protects the units operation and provides valuable diagnostic information when required.

Factory-installed options (FIOPs)

Certified and pre-engineered factory-installed options (FIOPs) allow units to be installed in less time, thereby reducing installed cost. FIOPs include:

- low ambient controls which provide cooling operation down to -20°F (-29°C) ambient temperatures
- non-fused disconnect
- 115-v GFI (ground fault interrupter) convenience outlet, powered and non-powered available
- special coil coating coil protection
- louvered hail guard

Efficient operation

These air cooled condensing units will provide EER's up to 11.5 which meets ASHRAE 90.1 efficiency levels. The 38AU dual compressor models provide two (2) stages of cooling for remarkable partial load performance.

This high efficiency will help reduce overall operating cost and energy consumption.

Controls for performance dependability

The 38AU condensing units offer operating controls and components designed for performance dependability. The high efficiency hermetic scroll compressor is engineered for long life and durability. The compressors include vibration isolation for quiet operation. The high-pressure switch protects the entire refrigeration system from abnormally high operating pressures. A low-pressure switch protects the system from loss of charge. These units also include anti-short-cycling protection, which helps to protect the units against compressor failure.

All units include a crankcase heater to eliminate liquid slugging at start-up. Each unit comes standard with the Comfort Alert™ control system. This provides:

- System Go LED indicator
- Fault LED indicator
- Compressor fault LED indicator
- Phase loss protection
- Phase reversal protection
- Safety pressure indicator
- Anti-short cycle protection

The latest safety standards for 38AUZ/D units are assured through UL, Canada approvals.

Innovative Carrier 40RU packaged air handlers are custom matched to 38AUZ/D condensing units

Information on matching 40RU DX packaged air handler follows for convenience. See separate product data for more details. The 40RU Series has excellent fan performance, efficient direct-expansion (DX) coils, a unique combination of indoor-air quality features, and is easy to install. Its versatility and state-of-the-art features help to ensure economical performance of the split system both now and in the future.

Indoor-air quality (IAQ) features

The unique combination of IAQ features in the 40RU Series air handlers help to ensure that only clean, fresh, conditioned air is delivered to the occupied space.

Direct-expansion (DX) 4 row cooling coils prevent the build-up of humidity in the room, even during part-load conditions.

Standard 2-in. (51mm) disposable filters remove dust and airborne particles from the occupied space for cleaner air.

The pitched, non-corroding drain pan can be adjusted for a right-hand or left-hand connection to suit many applications and provide positive drainage and prevent standing condensate.

The accessory economizer can provide ventilation air to improve indoor-air quality by using demand control ventilation. When used in conjunction with Carrier Comfort System and CO_2 sensors, the economizer admits fresh outdoor air to replace stale, recirculated indoor air.

Economy

The 40RU Series packaged air handlers provide reduced installation expense and energy-efficient performance.

Quick installation is ensured by the multipoise design. Units can be installed in either the horizontal or vertical configuration without modifications. Fan motors and contactors are pre-wired and thermostatic expansion valves (TXVs) are factory-installed on all 40RU models.

High efficiency, precision-balanced fans minimize air turbulence, surging, and unbalanced operation, cutting operation expenses.

The economizer accessory precisely controls the blend of outdoor air and room air to achieve comfort levels. When the outside air enthalpy is suitable, outside air dampers can fully open to provide "free" cooling without energizing mechanical cooling.

Rugged dependability

The 40RU series units are made to last. The die-formed galvanized steel panels ensure structural integrity under all operating conditions. Galvanized steel fan housings are securely mounted to a die-formed galvanized steel fan deck.

Rugged pillow-block bearings (40RU14) are securely fastened to the solid steel fan shaft with split collets and clamp locking devices. Smaller unit sizes have spider-type bearings.

Coil flexibility

Model 40RU direct- expansion coils have galvanized steel casings; inlet and outlet connections are on the same end. The coils are designed for use with Puron (R-410A) refrigerant and have $^{3}/_{8}$-in. diameter copper tubes mechanically bonded to aluminum sine-wave fins. The coils include matched, factory-installed thermostatic expansion valves (TXVs) with matching distributor nozzles and offers a removable power element and extended connections.

Easier installation and service

The multipoise design and component layout ensures quick unit installation and operation. Units can be converted from horizontal to vertical operation by simply repositioning the unit. Drain pan connections are duplicated on both sides of the unit. The filters, motor, drive, TXVs, and coil connections are all easily accessed by removing a single side panel.

TABLE OF CONTENTS

PAGE

FEATURES / BENEFITS 1
MODEL NUMBER NOMENCLATURE 4
AHRI CAPACITY RATINGS 5
SOUND POWER LEVELS 5
PHYSICAL DATA 6
DIMENSIONS 8
OPTIONS AND ACCESSORIES 11
SELECTION PROCEDURE 15
TYPICAL WIRING SCHEMATIC 16
PERFORMANCE DATA 18
ELECTRICAL DATA 43
APPLICATION DATA 48
TYPICAL PIPING AND WIRING 53
GUIDE SPECIFICATIONS 57

MODEL NUMBER NOMENCLATURE

1	2	3	4	5	6	7	8	9	10	11	12	13	14	15	16	17	18
3	8	A	U	Z	A	1	4	A	0	G	6	–	0	A	0	A	0

Model Type
38AU = Air Cooled Cond. Unit
Puron® R–410A Refrigerant

Type of Coil
D = Dual Circuit, A/C Scroll Compressor
Z = Single Circuit, A/C Scroll Compressor

Refrigerant Options
A = None
B = Low Ambient

Nominal Tonnage
07 = 6 Tons
08 = 7.5 Tons
12 = 10 Tons
14 = 12.5 Tons
16 = 15 Tons
25 = 20 Tons

Factory Assigned
A = Default

Factory Assigned
0 = Default

Brand / Packaging
0 = Standard
1 = LTL

Electrical Options
A = None
C = Non–Fused Disconnect

Service Options
0 = None
1 = Un–powered Convenience Outlet
2 = Powered Convenience Outlet

Factory Assigned
A = Default

Base Unit Controls
0 = Electro–Mechanical Controls

Design Rev
– = Catalog Model Number

Voltage
1 = 575/3/60
5 = 208/230/3/60
6 = 460/3/60

Coil Options (Condenser)
With Round Tube/Plate Fin Design
A = Al/Cu Standard
B = Pre Coat Al/Cu
C = E–Coat Al/Cu
E = Cu/Cu
M = Al/Cu Standard with louvered hail guard
N = Pre Coat Al/Cu with louvered hail guard
P = E–Coat Al/Cu with louvered hail guard
R = Cu/Cu – Louvered hail guard
Coil Options (Condenser)
With All Aluminium – NOVATION Design (07–16 sizes)
G = Al/Al Standard
K = E–Coat Al/Al
T = Al/Al with louvered hail guard
W = E–Coat Al/Al with louvered hail guard

38AU

Use of the AHRI Certified TM Mark indicates a manufacturer's participation in the program For verification of certification for individual products, go to www.ahridirectory.org.

38AUZ – 6 to 12.5 Ton
38AUD – 10 to12.5 Ton

38AUD/Z – 15 to 20 Ton

Certified to ISO 9001

AHRI* CAPACITY RATINGS

UNIT	COOLING CIRCUITS	COMPRESSORS	NOM. CAPACITY (TONS)	NET COOLING CAPACITY (MBH)	TOTAL POWER (kW)	EER	IEER
38AUZ07/40RU07	1	1	6	71.0	6.2	11.5	12.2
38AUZ08/40RU08	1	1	7.5	92.0	8.2	11.2	11.8
38AUZ12/40RU12	1	1	10	117.0	10.4	11.2	12.0
38AUZ14/40RU14	1	1	12.5	148.0	13.5	11.0	12.0
38AUZ16/40RU16	1*	2	15	184.0	16.4	11.2	13.2
38AUZ25/40RU25	1*	2	20	240.0	21.8	11.0	11.2

* Single circuit with two (tandem) compressors. See application tip #38TIP–10–03 for staging capabilities.

UNIT	COOLING CIRCUITS	COMPRESSORS	NOM. CAPACITY (TONS)	NET COOLING CAPACITY (MBH)	TOTAL POWER (kW)	EER	IEER
38AUD12/40RU12	2	2	10	117.0	10.4	11.2	11.6
38AUD14/40RU14	2	2	12.5	148.0	13.5	11.0	12.0
38AUD16/40RU16	2	2	15	184.0	16.4	11.2	11.8
38AUD25/40RU25	2	2	20	240.0	21.8	11.0	11.2

LEGEND

AHRI – Air Conditioning, Heating and Refrigeration Institute
ASHRAE – American Society of Heating, Refrigerating and Air Conditioning, Inc.
EER – Energy Efficiency Ratio
IEER – Integrated Energy Efficiency Ratio

NOTES

1. Rated in accordance with AHRI Standard 340/360, as appropriate.
2. Ratings are based on:
   Cooling Standard: 80°F (27°C) db, 67°F (19°C) wb indoor air temp and 95°F (35°C) db outdoor air temp.
   IEER Standard: 80°F (27°C) db, 67°F (19°C) wb indoor air temp and 4 various outdoor temperatures.
3. All units comply with ASHRAE 90.1 Energy Standard for minimum EER and IEER requirements.

SOUND POWER LEVELS, dB

UNIT	COOLING CIRCUITS	OUTDOOR SOUND (dB)								
		A–WEIGHTED	63	125	250	500	1000	2000	4000	8000
NOVATION – All Aluminum Coil Design										
38AUZ07	1	82	86.4	86.0	79.2	80.2	77.6	72.0	67.9	62.3
38AUZ08	1	82	86.8	85.7	80.3	80.3	77.7	72.3	70.2	65.4
38AUZ12	1	82	82.8	81.5	79.2	79.4	76.2	72.3	69.4	64.2
38AUZ14	1	82	82.9	78.5	77.0	77.0	75.6	75.9	72.3	70.9
38AUZ16	1	80	90.3	81.8	78.0	76.7	75.2	70.5	66.4	61.9
38AUZ25	1	85	91.0	85.0	80.0	86.0	79.0	73.0	68.0	63.0
38AUD12	2	82	85.2	84.0	81.0	79.5	76.6	72.4	69.3	69.5
38AUD14	2	82	84.7	79.8	78.8	77.6	77.0	72.5	70.3	67.3
38AUD16	2	80	90.3	81.8	78.0	76.7	75.2	70.5	66.4	61.9
38AUD25	2	85	91.0	85.0	80.0	86.0	79.0	73.0	68.0	63.0
RTPF – Round Tube/Plate Fin Coil Design										
38AUZ07	1	85	89.3	85.0	82.0	82.7	80.2	75.2	71.0	66.0
38AUZ08	1	85	89.3	85.0	82.0	82.7	80.2	75.2	71.0	66.0
38AUZ12	1	83	86.6	81.9	85.7	80.0	77.1	74.6	69.2	65.8
38AUD12	2	84	86.3	85.8	81.4	81.9	79.5	75.1	71.9	68.9
38AUD14	2	83	81.7	80.9	82.2	80.4	78.2	73.6	69.7	65.4
38AUZ16	2	83	86.7	81.2	78.9	80.4	78.0	74.2	70.2	65.0
38AUD16	2	83	86.7	81.2	78.9	80.4	78.0	74.2	70.2	65.0
38AUZ25	2	85	91.0	85.0	80.0	86.0	79.0	73.0	68.0	63.0
38AUD25	2	85	91.0	85.0	80.0	86.0	79.0	73.0	68.0	63.0

LEGEND

dB = Decibel

NOTE: Outdoor sound data is measure in accordance with AHRI standard 270–2008.

PHYSICAL DATA

Single Circuit Models with NOVATION – All Aluminum Coil Design					
	38AUZ07	**38AUZ08**	**38AUZ12**	**38AUZ14**	**38AUZ16**
Refrigeration System					
# Circuits / # Comp. / Type	1 / 1 / Scroll	1 / 1 / Scroll	1 / 1 / Scroll	1 / 1 / Scroll	1 / 2 /Scroll
R–410A charge A/B (lbs)	4.4	4.9	6.3	7.3	12.2
System charge w/ fan coil	8.4	10.2	13.8	18.0	24.6
Metering device	TXV	TXV	TXV	TXV	TXV
High–press. Trip / Reset (psig)	630 / 505	630 / 505	630 / 505	630 / 505	630 / 505
Low–press. Trip / Reset (psig)	54 / 117	54 / 117	54 / 117	54 / 117	54 / 117
Cond. Coil					
Material (Fin/Tube)	Al/Al	Al/Al	Al/Al	Al/Al	Al/Al
Coil type	Novation	Novation	Novation	Novation	Novation
Rows / FPI	1 / 20.3	1 / 20.3	1 / 20.3	1 / 20.3	1 / 20.3
Total face area (ft2)	17.5	20.5	25.0	31.8	25.0 x 2
Cond. fan / motor					
Qty / Motor drive type	2 / direct	2 / direct	2 / direct	2 / direct	3 / direct
Motor HP / RPM	1/4 / 1100	1/4 / 1100	1/4 / 1100	1/4 / 1100	1/4 / 1100
Fan diameter (in)	22	22	22	22	22
Nominal Airflow (cfm)	6,000	6,000	6,000	6,000	10,000
Watts (total)	610	610	610	610	970

Note: 38AUZ25 model is not available with NOVATION coil.

38AU

Single Circuit Models with RTPF – Round Tube/Plate Fin Coil Design						
	38AUZ07	**38AUZ08**	**38AUZ12**	**38AUZ14**	**38AUZ16**	**38AUZ25**
Refrigeration System						
# Circuits / # Comp. / Type	1 / 1 / Scroll	1 / 1 / Scroll	1 / 1 / Scroll	1 / 1 / Scroll	1 / 2 / Scroll	1 / 2 / Scroll
R–410a charge A/B (lbs)	11.0	13.0	16.0	32.0	32.0	28.0
System charge w/ fan coil*	14.0	17.0	20.0	N/A	43.0	38.0
Metering device	TXV	TXV	TXV	TXV	TXV	TXV
High–press. Trip / Reset (psig)	630 / 505	630 / 505	630 / 505	630 / 505	630 / 505	630 / 505
Low–press. Trip / Reset (psig)	54 / 117	54 / 117	54 / 117	54 / 117	54 / 117	54 / 117
Cond. Coil						
Material (Fin/Tube)	Al/Cu	Al/Cu	Al/Cu	Al/Cu	Al/Cu	Al/Cu
Coil type	RTPF	RTPF	RTPF	RTPF	RTPF	RTPF
Rows / FPI	2 / 17	2 / 17	2 / 17	3 / 17	2 / 17	2 / 17
Total face area (ft2)	17.5	17.5	25.1	31.8	23.5 x 2	25.0 x 2
Cond. fan / motor						
Qty / Motor drive type	2 / direct	2 / direct	2 / direct	2 / direct	3 / direct	4 / direct
Motor HP / RPM	1/4 / 1100	1/4 / 1100	1/4 / 1100	1/4 / 1100	1/4 / 1100	1/4 / 1100
Fan diameter (in)	22	22	22	22	22	22
Nominal Airflow (cfm)	6,000	6,000	6,000	6,000	9,000	12,000
Watts (total)	610	610	610	610	970	1150

* Approximate system charge with about 25 ft piping of sizes indicated with matched 40RU

PHYSICAL DATA (CONT.)

Dual Circuit Models with NOVATION – All Aluminum Coil Design			
	38AUD12	38AUD14	38AUD16
Refrigeration System			
# Circuits / # Comp. / Type	2 / 2 /Scroll	2 / 2 /Scroll	2 / 2 /Scroll
R–410A charge A/B (lbs)	3.0 /3.1	3.7/3.9	6.1/6.1
System charge w/ fan coil	7.4 / 7.4	10.8 / 10.8	12.0/12.0
Metering device	TXV	TXV	TXV
High–press. Trip / Reset (psig)	630 / 505	630 / 505	630 / 505
Low–press. Trip / Reset (psig)	54 / 117	54 / 117	54 / 117
Cond. Coil			
Material (Fin/Tube)	Al/Al	Al/Al	Al/Al
Coil type	Novation	Novation	Novation
Rows / FPI	1 / 20.3	1 / 20.3	1 / 20.3
Total face area (ft2)	25.0	31.8	25.0 x 2
Cond. fan / motor			
Qty / Motor drive type	2 / direct	2 / direct	3 / direct
Motor HP / RPM	1/4 / 1100	1/4 / 1100	1/4 / 1100
Fan diameter (in)	22	22	22
Nominal Airflow (cfm)	6,000	6,000	10,000
Watts (total)	610	610	970

Note: 38AUD25 model is not available with NOVATION coil.

Dual Circuit Models with RTPF – Round Tube/Plate Fin Coil Design				
	38AUD12	38AUD14	38AUD16	38AUD25
Refrigeration System				
# Circuits / # Comp. / Type	2 / 2 / Scroll	2 / 2 /Scroll	2 / 2 / Scroll	2 / 2 / Scroll
R–410a charge A/B (lbs)	8.0 / 8.0	16.0 / 16.0	16.0 / 16.0	14.0 / 14.0
System charge w/ fan coil*	11.0 / 11.0	22.0 / 22.0	22.0 / 22.0	19.0 / 19.0
Metering device	TXV	TXV	TXV	TXV
High–press. Trip / Reset (psig)	630 / 505	630 / 505	630 / 505	630 / 505
Low–press. Trip / Reset (psig)	54 / 117	54 / 117	54 / 117	54 / 117
Cond. Coil				
Material (Fin/Tube)	Al/Cu	Al/Cu	Al/Cu	Al/Cu
Coil type	RTPF	RTPF	RTPF	RTPF
Rows / FPI	2 / 17	3 / 17	2 / 17	2 / 17
total face area (ft2)	25.1	31.8	23.5 x 2	25.0 x 2
Cond. fan / motor				
Qty / Motor drive type	2 / direct	2 / direct	3 / direct	4 / direct
Motor HP / RPM	1/4 / 1100	1/4 / 1100	1/4 / 1100	1/4 / 1100
Fan diameter (in)	22	22	22	22
Nominal Airflow (cfm)	6,000	6,000	9,000	12,000
Watts (total)	610	610	970	1150

* Approximate system charge with about 25 ft piping of sizes indicated with matched 40RU

DIMENSIONS

UNIT	ELECTRICAL CHARACTERISTICS	STD. UNIT WT.		CORNER A		CORNER B		CORNER C		CORNER D		CENTER OF GRAVITY			UNIT HEIGHT
		LBS.	KG.	LBS.	KG.	LBS.	KG.	LBS.	KG.	LBS.	KG.	X	Y	Z	H
38AUZ-07 (MCHX)	208/230-3-60,460-3-60,575-3-60	328	149	128	58	68	31	62	28	70	32	21 [533.4]	19 [482.6]	13 [330.2]	42-3/8 [1076.0]
38AUZ-08 (MCHX)	208/230-3-60,460-3-60,575-3-60	353	160	138	63	72	33	65	29	78	35	19 [482.6]	23 [584.2]	13 [330.2]	42-3/8 [1076.0]
38AUZ-12 (MCHX)	208/230-3-60,460-3-60,575-3-60	418	190	165	75	85	39	78	35	90	41	23 [584.2]	20 [508.0]	15 [381.0]	50-3/8 [1279.2]
38AUZ-14 (MCHX)	208/230-3-60,460-3-60,575-3-60	431	196	162	73	82	37	92	42	95	43	19 [482.6]	23 [584.2]	15 [381.0]	50-3/8 [1279.2]
38AUD-12 (MCHX)	208/230-3-60,460-3-60,575-3-60	499	226	193	88	111	50	72	38	123	56	20 [508.0]	23 [584.2]	15 [381.0]	50-3/8 [1279.2]
38AUD-14 (MCHX)	208/230-3-60,460-3-60,575-3-60	505	229	190	86	88	40	76	34	151	68	20 [508.0]	24 [609.6]	15 [381.0]	50-3/8 [1279.2]
38AUZ-07 (RTPF)	208/230-3-60,460-3-60,575-3-60	389	176	141	64	96	44	62	28	91	41	18 [457.2]	24 [609.6]	21 [533.4]	42-3/8 [1076.0]
38AUZ-08 (RTPF)	208/230-3-60,460-3-60,575-3-60	391	177	142	64	96	44	62	28	91	41	18 [457.2]	24 [609.6]	21 [533.4]	42-3/8 [1076.0]
38AUZ-12 (RTPF)	208/230-3-60,460-3-60,575-3-60	490	222	177	80	120	54	78	35	114	52	18 [457.2]	24 [609.6]	24 [609.6]	50-3/8 [1279.2]
38AUZ-14 (RTPF)	208/230-3-60,460-3-60,575-3-60	598	271	195	88	142	64	110	50	151	68	20 [508.0]	25 [635.0]	24 [609.6]	50-3/8 [1279.2]
38AUD-12 (RTPF)	208/230-3-60,460-3-60,575-3-60	516	234	185	84	117	53	83	38	131	59	19 [482.6]	23 [584.2]	24 [609.6]	50-3/8 [1279.2]
38AUD-14 (RTPF)	208/230-3-60,460-3-60,575-3-60	654	297	214	97	155	70	120	54	165	75	20 [508.0]	25 [635.0]	24 [609.6]	50-3/8 [1279.2]

CG CENTER OF GRAVITY

DIRECTION OF AIR FLOW

DIMENSIONS IN [ ] ARE IN MM

SERVICE VALVE CONNECTIONS		
UNIT	SUCTION	LIQUID
38AUZ07	1-1/8 [28.6]	3/8 [9.5]
38AUZ08	1-1/8 [28.6]	1/2 [12.7]
38AUZ12	1-3/8 [34.9]	1/2 [12.7]
38AUZ14	1-3/8 [34.9]	5/8 [15.9]
38AUD12	1-1/8 [28.6]	3/8 [9.5]
38AUD14	1-3/8 [34.9]	1/2 [12.7]

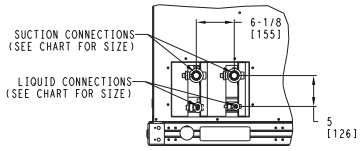

RIGHT SIDE VIEW
(FOR 38AUD SYSTEMS)

38AU

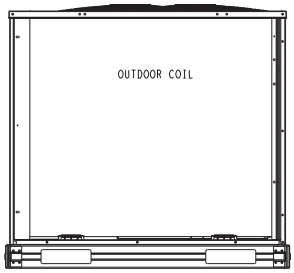

PLAN VIEW

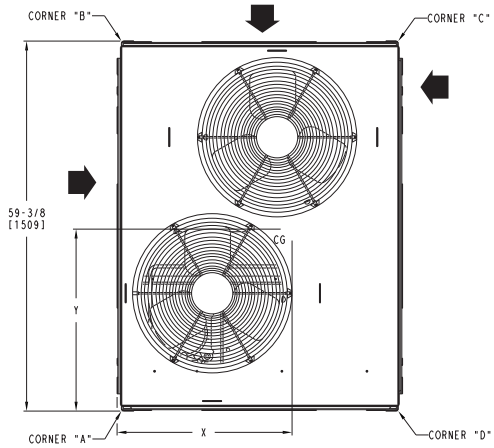

TOP VIEW

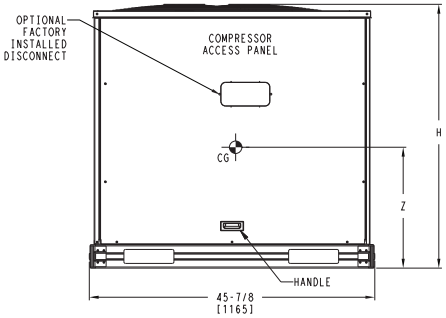

FRONT VIEW

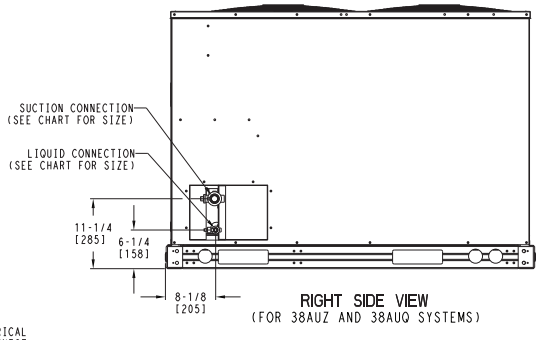

RIGHT SIDE VIEW
(FOR 38AUZ AND 38AUQ SYSTEMS)

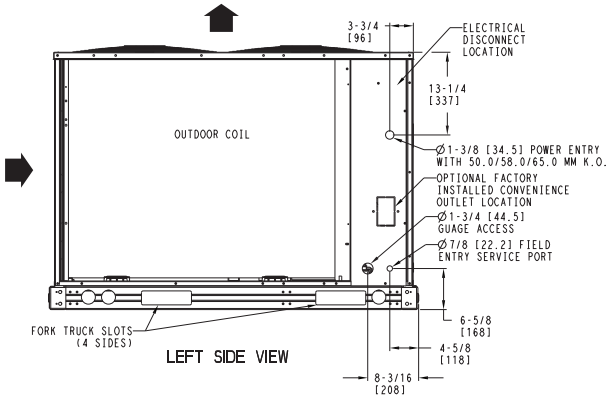

LEFT SIDE VIEW

NOTES:

1. MINIMUM CLEARANCE (LOCAL CODES OR JURISDICTION MAY PREVAIL):
   A. BOTTOM TO COMBUSTIBLE SURFACES: 0 INCHES.
   B. OUTDOOR COIL, FOR PROPER AIR FLOW: 36 INCHES ONE SIDE, 12 INCHES THE OTHER. THE SIDE GETTING THE GREATER CLEARANCE IS OPTIONAL.
   C. OVERHEAD: 60 INCHES, TO ASSURE PROPER OUTDOOR FAN OPERATION.
   D. BETWEEN UNITS: CONTROL BOX SIDE, 42 INCHES PER NEC.
   E. BETWEEN UNIT AND UNGROUNDED SURFACES: CONTROL BOX SIDE, 36 INCHES PER NEC.
   F. BETWEEN UNIT AND BLOCK OR CONCRETE WALLS AND OTHER GROUNDED SURFACES: CONTROL BOX SIDE, 42 INCHES PER NEC.

2. WITH EXCEPTION OF THE CLEARANCE FOR THE OUTDOOR COIL AS STATED IN NOTE 1B, A REMOVABLE FENCE OR BARRICADE REQUIRES NO CLEARANCE.

3. UNITS MAY BE INSTALLED ON COMBUSTIBLE FLOORS MADE FROM WOOD OR CLASS A, B OR C ROOF COVERING MATERIAL.

C101209A

DIMENSIONS (cont.)

UNIT	STD. UNIT WT.		CORNER A		CORNER B		CORNER C		CORNER D		CENTER OF GRAVITY			UNIT HEIGHT
	LBS.	KG.	LBS.	KG.	LBS.	KG.	LBS.	KG.	LBS.	KG.	X	Y	Z	H
38AUZ16 (MCHX)	633	288	220	100	134	61	135	61.5	144	65.5	38 [965.2]	19 [482.6]	15 [381]	50-3/8 [1279.2]
38AUD16 (MCHX)	633	288	220	100	134	61	135	61.5	144	65.5	38 [965.2]	19 [482.6]	15 [381]	50-3/8 [1279.2]
38AUZ16 (RTPF)	731	332	237	107	172	78	135	61	186	84	38 [965.2]	19 [482.6]	17 [431.8]	50-3/8 [1279.2]
38AUD16 (RTPF)	731	332	237	107	172	78	135	61	186	84	38 [965.2]	19 [482.6]	17 [431.8]	50-3/8 [1279.2]

CG CENTER OF GRAVITY

DIRECTION OF AIR FLOW

DIMENSIONS IN [ ] ARE IN MM

SERVICE VALVE CONNECTIONS			QTY
UNIT	SUCTION	LIQUID	
38AUZ16	1-3/8 [34.9]	5/8 [15.9]	1 EA
38AUD16	1-3/8 [34.9]	1/2 [12.7]	2 EA

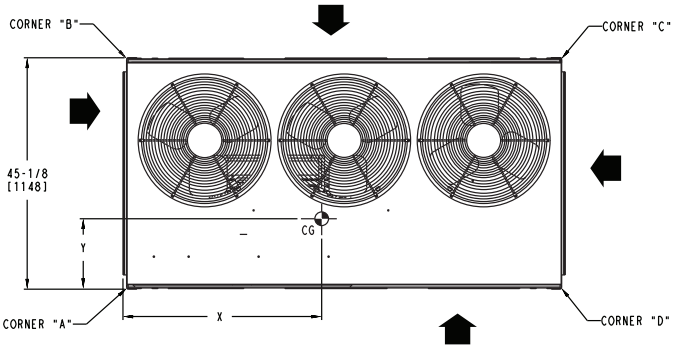

TOP VIEW

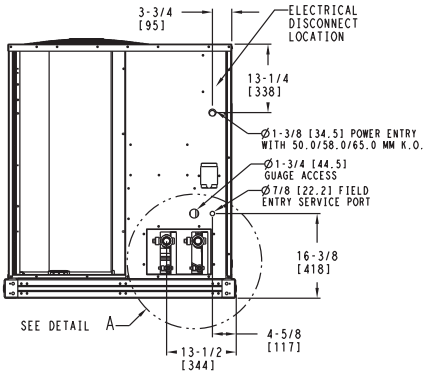

LEFT SIDE VIEW FOR 38AUD SYSTEMS

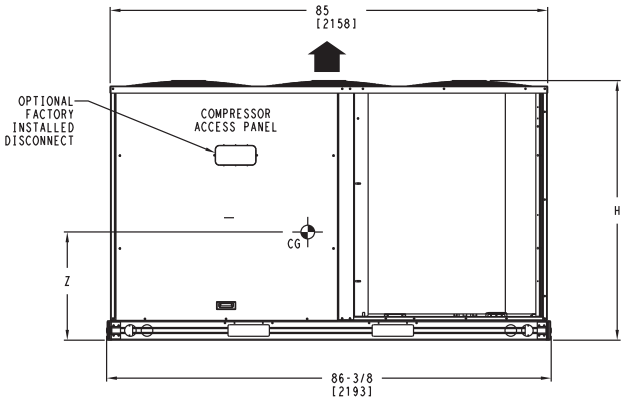

FRONT VIEW

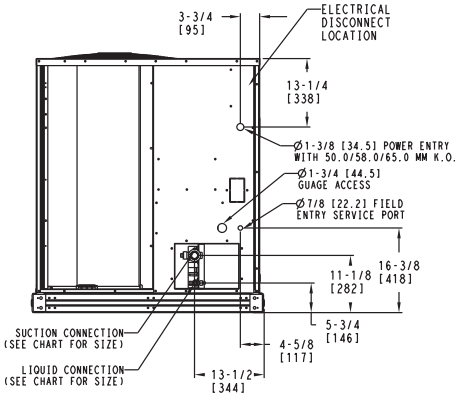

LEFT SIDE VIEW

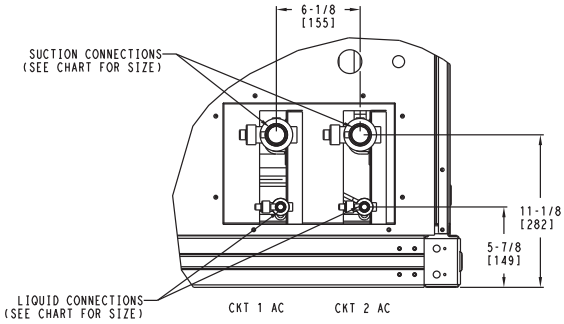

DETAIL A
(NOTE POSITION OF CKT 1)

NOTES:
1. MINIMUM CLEARANCE (LOCAL CODES OR JURISDICTION MAY PREVAIL):
   A. BOTTOM TO COMBUSTIBLE SURFACES: 0 INCHES.
   B. OUTDOOR COIL, FOR PROPER AIR FLOW: 36 INCHES ONE SIDE, 12 INCHES THE OTHER. THE SIDE GETTING THE GREATER CLEARANCE IS OPTIONAL.
   C. OVERHEAD: 60 INCHES, TO ASSURE PROPER OUTDOOR FAN OPERATION.
   D. BETWEEN UNITS: CONTROL BOX SIDE, 42 INCHES PER NEC.
   E. BETWEEN UNIT AND UNGROUNDED SURFACES: CONTROL BOX SIDE, 36 INCHES PER NEC.
   F. BETWEEN UNIT AND BLOCK OR CONCRETE WALLS AND OTHER GROUNDED SURFACES: CONTROL BOX SIDE, 42 INCHES PER NEC.
2. WITH EXCEPTION OF THE CLEARANCE FOR THE OUTDOOR COIL AS STATED IN NOTE 1B, A REMOVABLE FENCE OR BARRICADE REQUIRES NO CLEARANCE.
3. UNITS MAY BE INSTALLED ON COMBUSTIBLE FLOORS MADE FROM WOOD OR CLASS A, B OR C ROOF COVERING MATERIAL.

C101210

DIMENSIONS (cont.)

UNIT	STD. UNIT WT.		CORNER A		CORNER B		CORNER C		CORNER D		CENTER OF GRAVITY			UNIT HEIGHT
	LBS.	KG.	LBS.	KG.	LBS.	KG.	LBS.	KG.	LBS.	KG.	X	Y	Z	H
38AUZ25 (RTPF)	978	444	360	163	188	85	147	67	283	128	38 [965.2]	23 [584.2]	17 [431.8]	50-3/8 [1279.2]
38AUD25 (RTPF)	978	444	360	163	188	85	147	67	283	128	38 [965.2]	23 [584.2]	17 [431.8]	50-3/8 [1279.2]

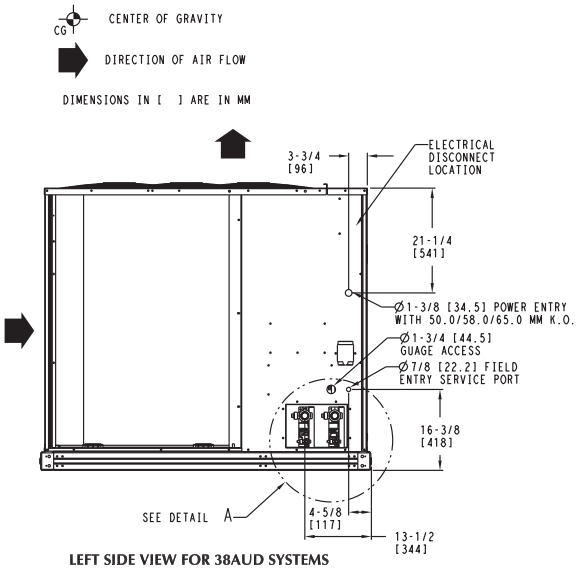

LEFT SIDE VIEW FOR 38AUD SYSTEMS

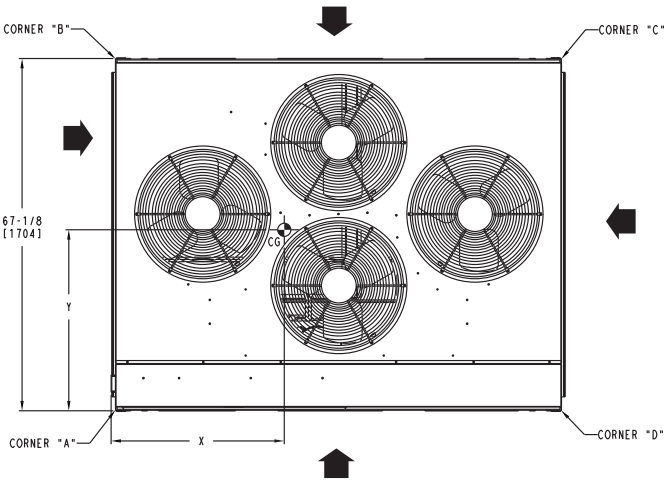

TOP VIEW

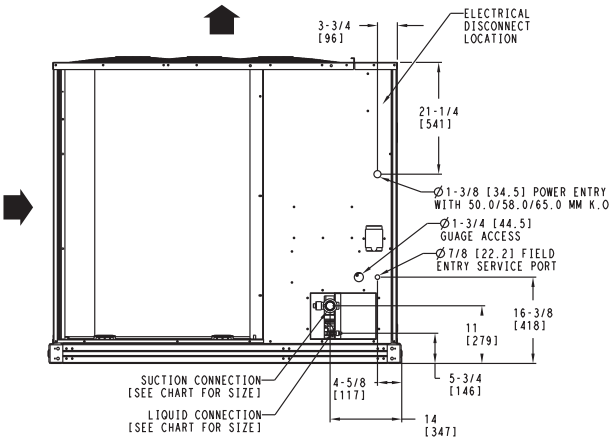

LEFT SIDE VIEW

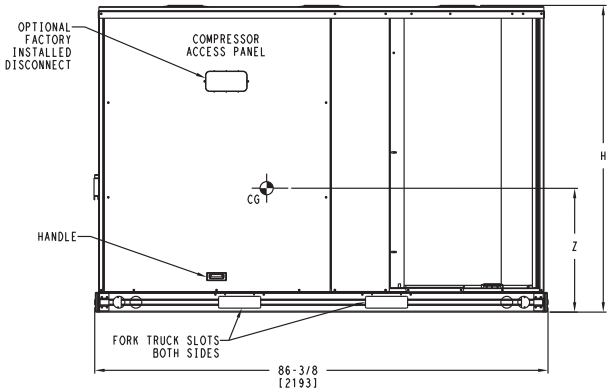

FRONT VIEW

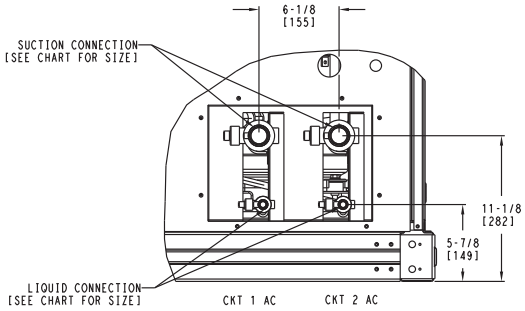

DETAIL A
(NOTE POSITION OF CKT 1)

NOTES:
1. MINIMUM CLEARANCE (LOCAL CODES OR JURISDICTION MAY PREVAIL):
   A. BOTTOM TO COMBUSTIBLE SURFACES: 0 INCHES.
   B. OUTDOOR COIL, FOR PROPER AIR FLOW: 36 INCHES ONE SIDE, 12 INCHES THE OTHER. THE SIDE GETTING THE GREATER CLEARANCE IS OPTIONAL.
   C. OVERHEAD: 60 INCHES, TO ASSURE PROPER OUTDOOR FAN OPERATION.
   D. BETWEEN UNITS: CONTROL BOX SIDE, 42 INCHES PER NEC.
   E. BETWEEN UNIT AND UNGROUNDED SURFACES: CONTROL BOX SIDE, 36 INCHES PER NEC.
   F. BETWEEN UNIT AND BLOCK OR CONCRETE WALLS AND OTHER GROUNDED SURFACES: CONTROL BOX SIDE, 42 INCHES PER NEC.
2. WITH EXCEPTION OF THE CLEARANCE FOR THE OUTDOOR COIL AS STATED IN NOTE 1B, A REMOVABLE FENCE OR BARRICADE REQUIRES NO CLEARANCE.
3. UNITS MAY BE INSTALLED ON COMBUSTIBLE FLOORS MADE FROM WOOD OR CLASS A, B OR C ROOF COVERING MATERIAL.

SERVICE VALVE CONNECTIONS			QTY
UNIT	SUCTION	LIQUID	
38AUZ25	1-5/8 [41.3]	5/8 [15.9]	1 EA
38AUD25	1-3/8 [34.9]	1/2 [12.7]	2 EA

C101211

OPTIONS AND ACCESSORIES

38AUZ/D OPTIONS AND ACCESSORIES

ITEM	OPTION*	ACCESSORY†
Disconnect Switch (non-fused)‡	X	
Special–coated Coil Protection	X	
Convenience Outlet (115-v)**	X	
Low Ambient Temperature MotorMaster I® Control	X	X
Wired Condenser Coil Grille (Novation 07 –14 models only)		X
Louvered Hail Guard	X	X
Programmable Thermostats		X

* Factory-installed option.
† Field-installed accessory.
‡ Non–fused disconnect switch cannot be used when unit MOCP electrical rating exceeds 80 amps.
** Powered and non–powered versions available

38AU

38AUZ/38AUD factory-installed options

CONDENSER COIL OPTIONS

Coil Coating Application - Novation Coils

Coil Description	Environment					
	Standard Non–Corrosive	Mild Coastal	Moderate Coastal	Severe Coastal	Industrial	Industrial & Coastal
Alum Fin / Alum Tube	X					
E–Coated Al / Al		X	X	X	X	X

NOTE: E–Coat is only available and must be used in any non–standard environment listed above.

Coil Coating Application - Round Tube/Plate Fin Coils (07,08, 12, 16, 25 models)

Enviro–Shield™ Description	Environment					
	Standard Non–Corrosive	Mild Coastal	Moderate Coastal	Severe Coastal	Industrial	Industrial & Coastal
Alum Fin / Cu Tube	X					
Pre–Coated Al / Cu		X				
E–Coated Al / Cu					X	X
Cu / Cu			X	X		

NOTE: Refer to the Guide Specifications for further detail.

E-coated aluminum-fin coils have a flexible and durable epoxy coating uniformly applied to all coil surfaces. Unlike brittle phenolic dip and bake coatings, E-coating provides superior protection with unmatched flexibility, edge coverage, metal adhesion, thermal performance, and most importantly, corrosion resistance.

E-coated coils provide this protection since all coil surfaces are completely encapsulated from environmental contamination. This coating is especially suitable in industrial environments.

Pre-coated coils (RTPF coils only) provide protection in mild coastal environments.

–20°F (–29°C) low-ambient temperature kit option (MotorMaster I®) controls outdoor-fan motor operation to maintain the correct head pressure at low outdoor ambient temperatures.

Louvered hail guard package protects coils against damage from flying debris and hail.

115-v convenience outlet is used to power electric drills, lights, and refrigerant recovery machines. This means that a separate 115-v power supply is no longer necessary.

Non-fused disconnect switch is used to remove power locally at the condensing unit. This switch also includes a power lockout capability to protect the service person. This lockout switch saves the service person time and effort because there is no need to access a distant disconnect switch while servicing the unit.

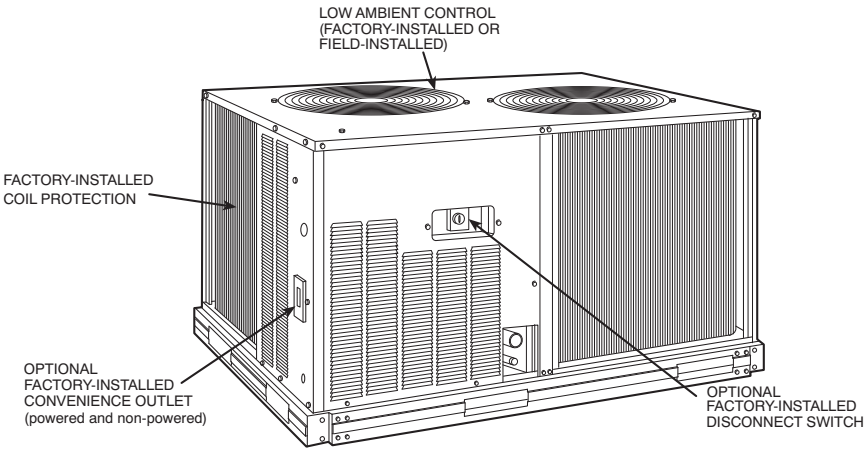

C101216

38AUZ/D field-installed accessories

–20°F (–29°C) low-ambient temperature kit accessory (MotorMaster I®) controls outdoor-fan motor operation to maintain the correct head pressure at low outdoor ambient temperatures.

Louvered hail guard package protects coils against damage from flying debris and hail.

Condenser coil grille package protects condensing unit coil from impact by large objects and vandalism.

Carrier's line of thermostats provide both programmable and non-programmable capability with the new **Debonair®** line of commercial programmable thermostats. The **Commercial Electronic** thermostats provide 7-day programmable capability for economical applications.

40RU OPTIONS AND ACCESSORIES

ITEM	OPTION*	ACCESSORY†
Alternate Fan Motors	X	
Alternate Drives	X	
CO_2 Sensors		X
Condensate Drain Trap		X
Discharge Plenum		X
Economizer		X
Electric Heat		X
Hot Water Heating Coils		X
Overhead Suspension Package		X
Prepainted Units	X	
Return Air Grille		X
Steam Heating Coil		X
Subbase		X
UV-C Germicidal Lamp**		X

* Factory-installed option.
† Field-installed accessory.
** Contact application engineer.

40RU factory-installed options

Alternate fan motors and drives are available to provide the widest possible range of performance.

Units constructed of prepainted steel are available from the factory for applications that require painted units. Unit color is American Sterling Gray.

40RU field-installed accessories

Two-row hot water coils have $^5/_8$-in. diameter copper tubes mechanically bonded to aluminum plate fins. Coils have non-ferrous headers.

One-row steam coil has 1-in. OD copper tube and aluminum fins. The Inner Distributing Tube (IDT) design provides uniform temperatures across the coil face. The IDT steam coils are especially suited to applications where sub-freezing air enters the unit.

Electric resistance heat coils have an open-wire design and are mounted in a rigid frame. Safety cutouts for high temperature conditions are standard.

Economizer (enthalpy controlled) provides ventilation air and provides "free" cooling if the outside ambient temperature and humidity are suitable. The economizer can also be used in conjunction with Carrier Comfort System thermostats and CO_2 sensors to help meet indoor air quality requirements. The economizer can be used in both vertical and horizontal positions.

Discharge plenum directs the air discharge into the occupied space; integral horizontal and vertical louvers enable redirection of airflow. This accessory is available unpainted or painted.

Return-air grille provides a protective barrier over the return-air opening and gives a finished appearance to units installed in the occupied space. This accessory is available unpainted or painted.

Subbase provides a stable, raised platform and room for condensate drain connection for floor-mounted units. This accessory is available unpainted or painted.

Overhead suspension package includes necessary brackets to support units in horizontal installations.

CO_2 sensors can be used in conjunction with the economizer accessory to help meet indoor air quality requirements. The sensor signals the economizer to open when the CO_2 level in the space exceeds the setpoint. A Carrier Comfort System programmable thermostat can also be used to override the sensor if the outside-air temperature is too high or too low.

Condensate drain trap includes an overflow shutoff switch that can be wired to turn off the unit if the trap becomes plugged. The kit also includes a wire harness that can be connected to an alarm if desired. The transparent trap is designed for easy service and maintenance.

UV-C germicidal lamps kill mold and fungus that may grow on evaporator coil and condensate pan surfaces. The use of UV-C germicidal lamps eliminates the foul odors that result from mold and fungus growth. These lamps also provide a self-cleaning function for the evaporator coil and drain pan. Contact application engineer for info.

OPTIONS AND ACCESSORIES (cont.)

40RU WITH DISCHARGE PLENUM RETURN-AIR GRILLE AND SUBBASE

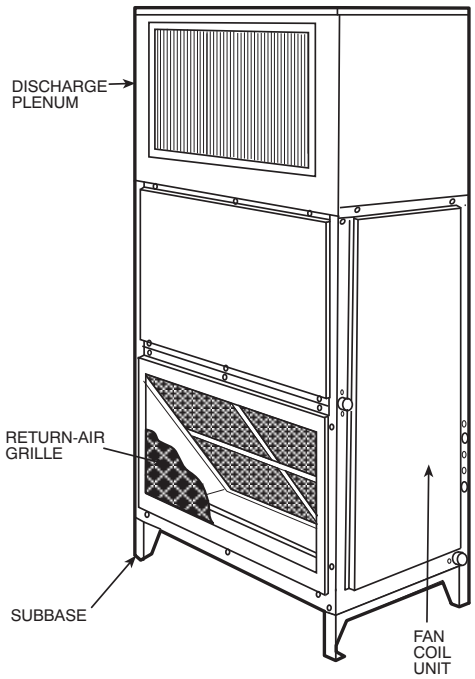

40RU WITH HOT WATER OR STEAM COIL

40RU WITH ECONOMIZER AND UV-C GERMICIDAL LAMPS

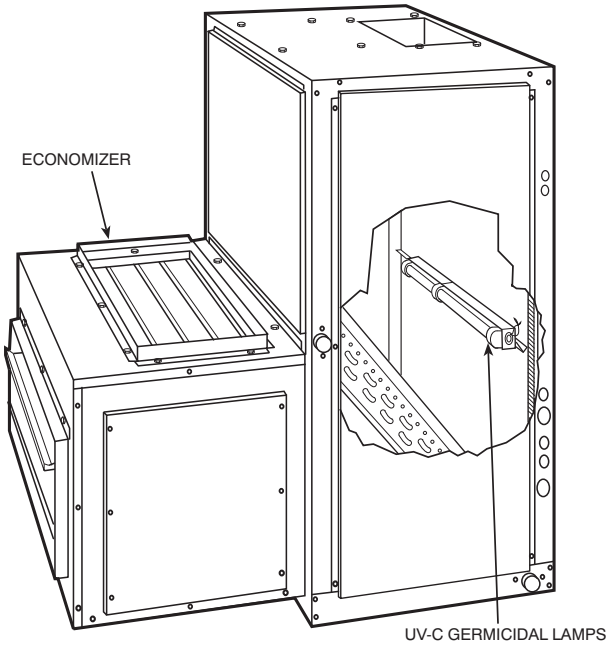

40RU WITH CONDENSATE TRAP

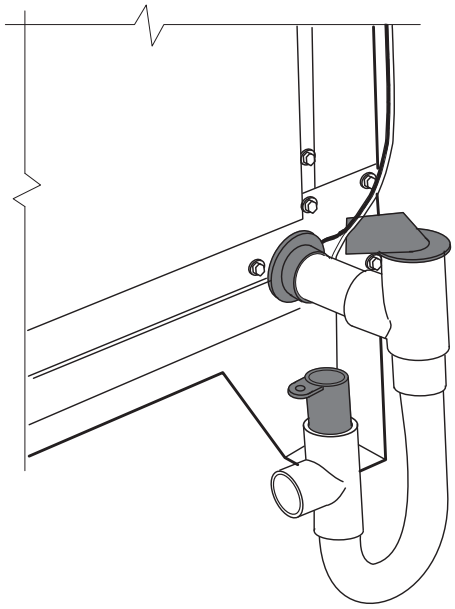

C09038

SELECTION PROCEDURE

Combination ratings for 38AUZ/D units matched with 40RU Series air handlers are in this book. If unit is used with an air handler, use the Carrier Electronic Catalog AHU (Air-Handling Unit) selection program to obtain combined ratings.

I. Determine cooling load, evaporator-air temperature, and quantity.

Given:

Total Cooling Capacity Required (TC) . . . . . 121,000 Btuh

Sensible Heat Capacity Required (SHC) . . . . . 95,000 Btuh

Compressor Type . . . . . Scroll

Temperature Air Entering Condenser (Edb) . . . . . 95°F

Temperature Air Entering Evaporator (db/wb) . . . . . 80°F db, 67°F wb

Evaporator Air Quantity . . . . . 4,000 cfm

External Static Pressure . . . . . 0.4 in. wg

Length of Interconnecting Refrigerant Piping . . . . . 25 ft (Linear)

Power Supply (V-Ph-Hz) 208/230-3-60

II. Select condensing unit air-handler combination.

For this example, select a 38AUZ12 matched with a 40RU012 coil. This 38AUZ12/40RU12 condensing unit air-handler combination provides 122,000 Btuh of total cooling capacity and 97,200 Btuh of sensible capacity at the given conditions. If other temperatures or airflow values are required, interpolate the values from the combination ratings.

III. Determine sizes of liquid and suction lines.

Enter Refrigerant Piping Sizes table. The sizes shown are based on an equivalent length of pipe. This equivalent length is equal to the linear length of pipe indicated at the top of each sizing column, plus a 50% allowance for fitting losses. (For a more accurate determination of actual equivalent length in place of using the estimated 50% value, refer to Carrier System Design Manual.) For this example, note in the linear length column that the proper pipe size is $^1/_2$ in. for the liquid line and $1^3/_8$ in. for the suction line.

For extended line lengths over 100 feet, contact your Carrier representative or application engineer.

IV. Determine fan rpm and bhp (brake horsepower).

Refer to the 40RU Air Handler Catalog - Fan Performance table. Enter the Air Handler Fan Performance table at 40RU12 at 4000 cfm and move to the External Static Pressure (ESP) column. Note that the conditions require 803 rpm at 1.77 bhp.

V. Determine motor and drive.

Enter the Fan Motor Data tables and find the standard motor for 40RU12 unit rated at 2.4 Hp. Since the bhp required is 1.77, a standard motor satisfies the requirement and should be used.

Next, find the type of drive that satisfies the 803 rpm requirement in the Drive Data tables. For the 40RU012 unit, the Standard Drive table shows an rpm range of 666-863. Since the rpm required is 803, the standard drive satisfies the requirement and should be used.

CONTROLS

Operating sequences

When the wall thermostat calls for cooling, terminals G and Y1 are energized. As a result, the indoor fan contactor (IFC) and the compressor contactor (C1) are energized, causing the indoor fan motor (IFM), compressor #1, and outdoor fans (OFM) to start. The field-supplied and field-installed liquid line valve also opens, allowing the system to function in Cooling mode.

If the unit has 2 stages of cooling, the wall thermostat will additionally energize Y2. The Y2 signal will energize compressor contactor #2 (C2), causing compressor #2 to start.

Regardless of the number of stages, the field-supplied liquid line valve shall opens and the outdoor fan motors(OFM) runs continuously while unit is cooling.

When cooling demand decrease, the thermostat will de-energize Y2. Y2 signal will de-energize compressor contactor #2 (C2), causing compressor #2 to stop.

When cooling demand has been satisfied, the thermostat will de-energize Y1, and G terminals. Y1 and G signal will de-energize compressor contactor #1 (C1), causing compressor #1 to stop. If the wall thermostat is set to continuous (CONT), the indoor fan motor will continue to operate. Otherwise, the indoor fan motor will stop.

The outdoor fan motors (OFM) will turn off and field-supplied liquid line valve shall close , minimizing the potential for refrigerant migration.

TYPICAL WIRING SCHEMATIC

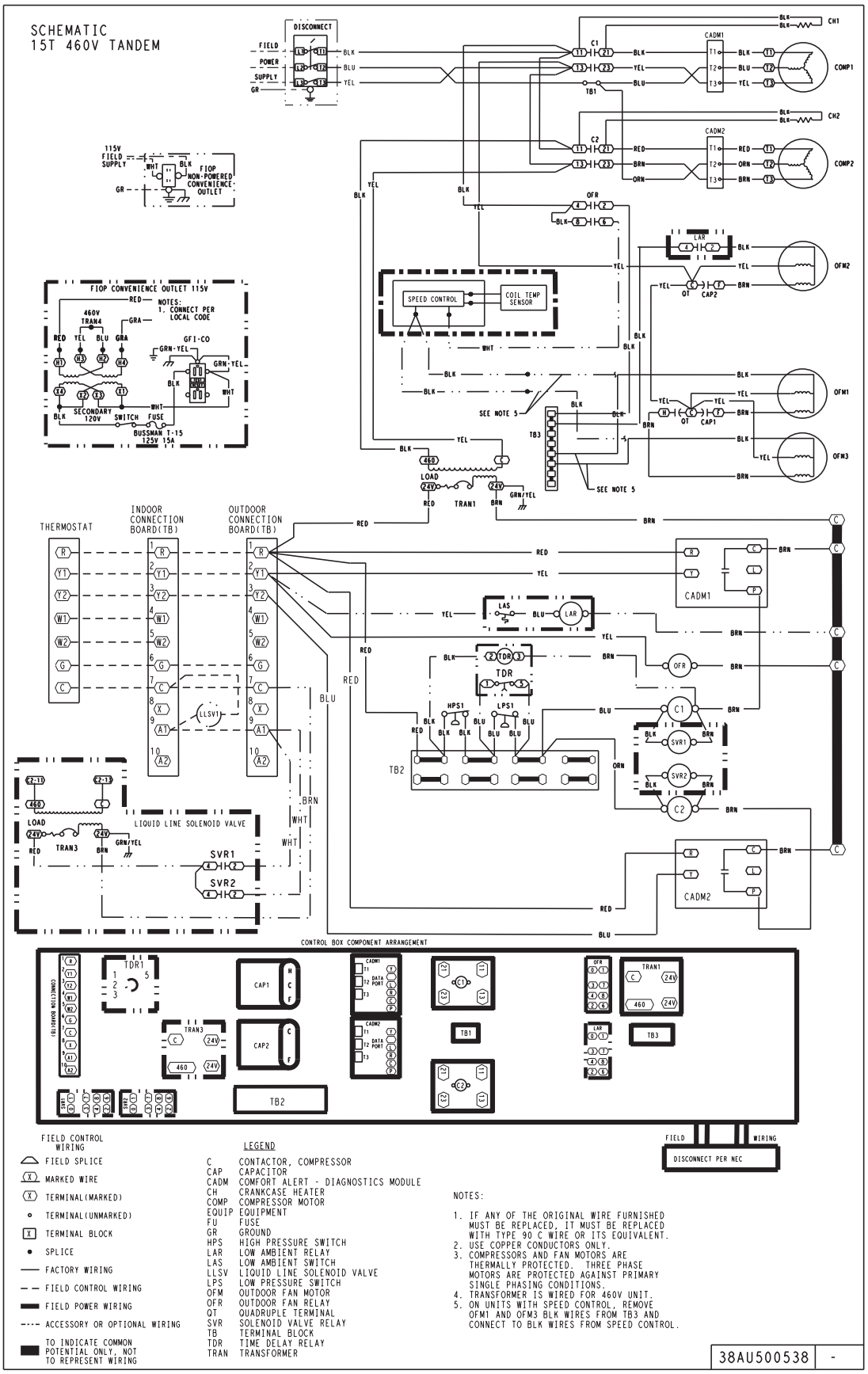

C09624

Typical 38AUZ*16 Single Circuit

TYPICAL WIRING SCHEMATIC (cont.)

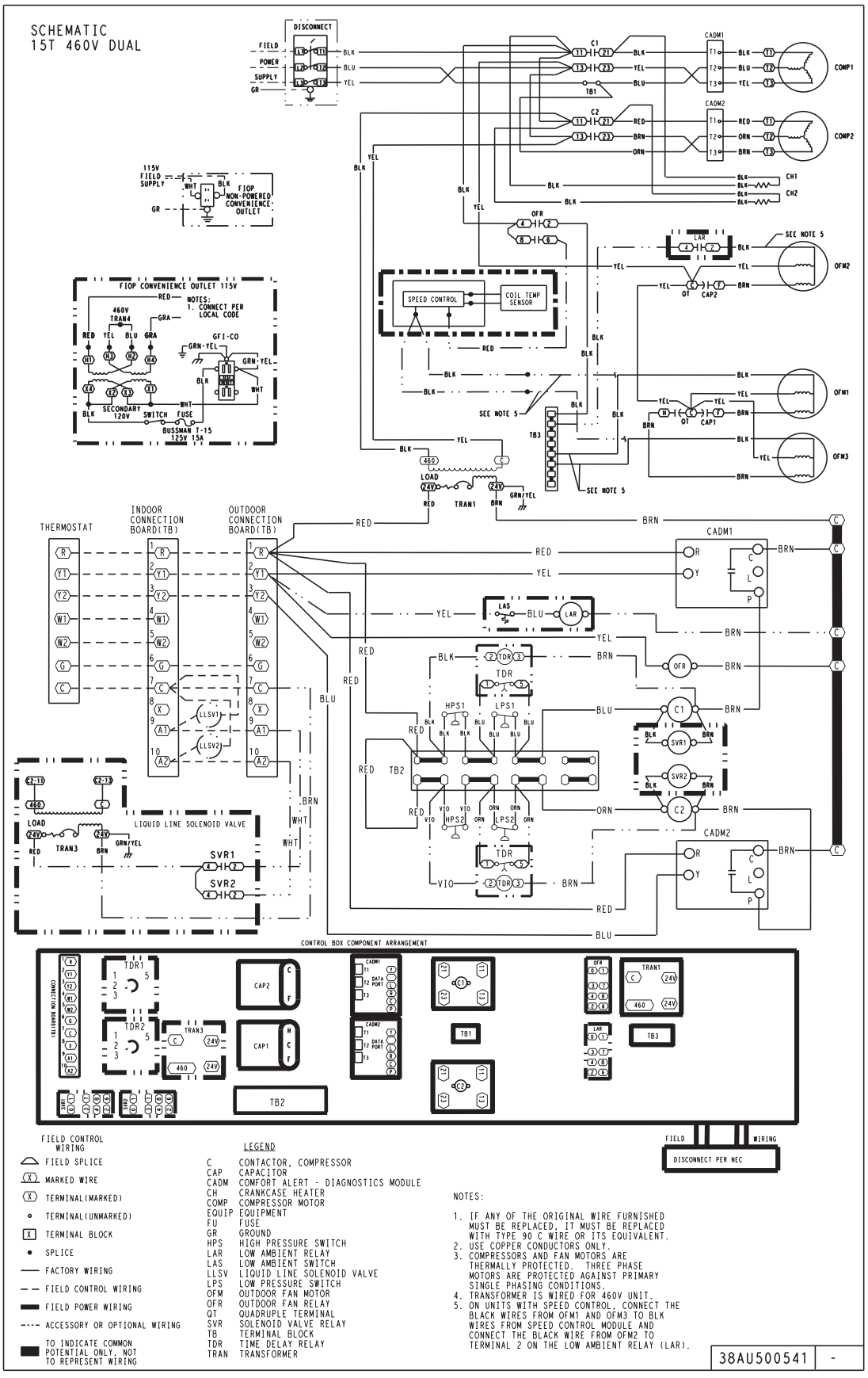

C09627

Typical 38AUD*16 Dual Circuit

38AU

PERFORMANCE DATA

38AUZ07 CONDENSER ONLY RATINGS

SST (°F)		AIR TEMPERATURE ENTERING CONDENSER (°F)					
		80	85	95	100	105	115
20	TC	46.7	45.1	41.7	39.8	37.9	33.9
	kW	4.04	4.27	4.77	5.04	5.32	5.93
	SDT	91.6	96.4	105.9	110.6	115.3	124.7
25	TC	51.8	50.2	46.5	44.6	42.6	38.4
	kW	4.06	4.29	4.79	5.05	5.33	5.95
	SDT	92.7	97.5	106.9	111.6	116.3	125.6
30	TC	57.0	55.2	51.4	49.4	47.3	42.9
	kW	4.07	4.30	4.80	5.07	5.35	5.96
	SDT	93.9	98.6	108.1	112.7	117.4	126.7
35	TC	62.7	60.8	56.8	54.6	52.4	47.8
	kW	4.09	4.32	4.81	5.08	5.36	5.98
	SDT	95.1	99.8	109.2	113.9	118.6	127.8
40	TC	68.7	66.7	62.5	60.2	57.9	53.0
	kW	4.11	4.34	4.83	5.10	5.38	5.99
	SDT	96.5	101.1	110.5	115.1	119.7	128.8
45	TC	75.2	73.1	68.5	66.2	63.7	58.6
	kW	4.13	4.36	4.84	5.10	5.38	5.99
	SDT	97.9	102.5	111.8	116.3	120.9	129.9
50	TC	82.2	79.9	75.1	72.5	69.9	64.4
	kW	4.15	4.37	4.85	5.12	5.39	6.00
	SDT	99.4	104.0	113.1	117.6	122.2	131.1

NOTE:
Condensing unit only ratings are at 45°F SST and 95°F entering–air temperature. EER = 13.1

38AUZ08 CONDENSER ONLY RATINGS

SST (°F)		AIR TEMPERATURE ENTERING CONDENSER (°F)					
		80	85	95	100	105	115
20	TC	65.2	63.2	59.1	57.0	54.8	50.5
	kW	5.04	5.33	5.98	6.34	6.73	7.60
	SDT	95.3	100.2	109.8	114.7	119.5	129.2
25	TC	71.5	69.4	65.0	62.8	60.5	55.9
	kW	5.12	5.42	6.07	6.42	6.81	7.66
	SDT	96.4	101.2	110.8	115.6	120.4	129.9
30	TC	77.8	75.5	70.9	68.5	66.2	61.3
	kW	5.22	5.51	6.16	6.51	6.89	7.74
	SDT	97.6	102.4	111.9	116.6	121.3	130.7
35	TC	84.8	82.4	77.5	75.0	72.4	67.2
	kW	5.32	5.61	6.26	6.61	6.99	7.83
	SDT	98.8	103.5	112.9	117.6	122.3	131.6
40	TC	92.3	89.7	84.5	81.8	79.0	73.5
	kW	5.44	5.73	6.37	6.72	7.10	7.94
	SDT	100.1	104.8	114.2	118.8	123.5	132.7
45	TC	100.3	97.5	91.9	89.0	86.1	80.1
	kW	5.57	5.86	6.50	6.85	7.23	8.07
	SDT	101.6	106.2	115.5	120.2	124.8	133.9
50	TC	108.7	105.8	99.8	96.7	93.6	87.3
	kW	5.71	6.00	6.64	7.00	7.38	8.21
	SDT	103.1	107.8	117.0	121.6	126.2	135.3

NOTE:
Condensing unit only ratings are at 45°F SST and 95°F entering–air temperature. EER = 13.0

LEGEND:
kW – Compressor Power
SDT – Saturated Discharge Temperature at Compressor (°F)
SST – Saturated Suction Temperature (°F)
TC – Gross Cooling Capacity (1000 Btuh)

38AUZ12 CONDENSER ONLY RATINGS

SST (°F)		AIR TEMPERATURE ENTERING CONDENSER (°F)					
		80	85	95	100	105	115
20	TC	78.0	75.4	70.1	67.3	64.6	58.9
	kW	6.03	6.44	7.31	7.76	8.23	9.21
	SDT	94.0	98.7	108.2	113.0	117.7	127.2
25	TC	86.4	83.6	77.9	74.9	72.0	66.0
	kW	6.11	6.53	7.41	7.87	8.36	9.36
	SDT	95.2	100.0	109.4	114.2	118.9	128.2
30	TC	94.7	91.8	85.6	82.5	79.4	73.0
	kW	6.20	6.62	7.51	7.98	8.47	9.49
	SDT	96.6	101.3	110.7	115.4	120.0	129.2
35	TC	104.0	100.8	94.3	90.9	87.6	80.7
	kW	6.30	6.71	7.61	8.09	8.58	9.62
	SDT	98.1	102.7	112.0	116.6	121.2	130.4
40	TC	113.9	110.4	103.4	99.9	96.2	88.9
	kW	6.39	6.81	7.71	8.20	8.70	9.75
	SDT	99.5	104.2	113.4	117.9	122.5	131.6
45	TC	124.3	120.6	113.1	109.2	105.4	97.5
	kW	6.49	6.92	7.83	8.32	8.82	9.89
	SDT	101.1	105.7	114.8	119.4	123.9	132.9
50	TC	135.4	131.4	123.3	119.2	115.0	106.5
	kW	6.61	7.04	7.96	8.45	8.96	10.03
	SDT	102.8	107.3	116.4	120.9	125.4	134.3

NOTE:
Condensing unit only ratings are at 45°F SST and 95°F entering–air temperature. EER = 13.5

38AUD12 Dual Circuit CONDENSER ONLY RATINGS

SST (°F)		AIR TEMP ENT CONDENSER (°F)					
		85	95	100	105	115	120
20	TC	75.29	69.95	67.18	64.32	58.42	55.21
	kW	6.88	7.89	8.43	8.96	10.04	10.53
	SDT	102.3	111.4	116.1	120.5	129.6	133.7
25	TC	83.12	77.31	74.32	71.28	64.99	61.76
	kW	6.97	7.98	8.53	9.07	10.18	10.73
	SDT	103.6	112.6	117.3	121.8	130.7	135.1
30	TC	91.41	85.21	81.99	78.76	72.08	68.58
	kW	7.06	8.08	8.63	9.18	10.31	10.87
	SDT	104.9	114.0	118.5	122.9	131.8	136.1
35	TC	100.35	93.69	90.26	86.76	85.11	75.65
	kW	7.15	8.18	8.73	9.29	10.42	10.99
	SDT	106.3	115.2	119.8	124.2	132.9	137.1
40	TC	109.90	102.58	98.84	95.06	87.13	83.07
	kW	7.25	8.29	8.83	9.39	10.54	11.12
	SDT	107.6	116.6	121.0	125.4	134.0	138.2
45	TC	119.86	111.84	107.74	103.56	95.02	90.54
	kW	7.36	8.39	8.93	9.49	10.64	11.22
	SDT	109.0	117.9	122.3	126.6	135.1	139.2
50	TC	130.20	121.39	116.90	112.33	103.07	98.17
	kW	7.48	8.51	9.04	9.60	10.75	11.33
	SDT	110.5	119.2	123.5	127.8	136.2	140.2

NOTE:
Condensing unit only ratings are at 45°F SST and 95°F entering–air temperature. EER = 13.0

LEGEND:
kW – Compressor Power
SDT – Saturated Discharge Temperature at Compressor (°F)
SST – Saturated Suction Temperature (°F)
TC – Gross Cooling Capacity (1000 Btuh)

38AUZ14 — CONDENSER ONLY RATINGS

SST (°F)		AIR TEMPERATURE ENTERING CONDENSER (°F)					
		80	85	95	100	105	115
20	TC	100.8	97.4	90.3	86.6	83.0	75.5
	kW	8.48	8.97	10.00	10.53	11.07	12.19
	SDT	98.0	102.6	111.8	116.4	120.9	130.0
25	TC	111.8	108.1	100.5	96.6	92.7	84.7
	kW	8.66	9.15	10.20	10.75	11.31	12.47
	SDT	99.6	104.1	113.2	117.7	122.3	131.3
30	TC	122.9	118.9	110.7	106.6	102.4	93.9
	kW	8.84	9.35	10.41	10.97	11.55	12.75
	SDT	101.3	105.8	114.8	119.3	123.8	132.7
35	TC	134.9	130.6	121.9	117.4	113.0	103.8
	kW	9.05	9.55	10.64	11.21	11.80	13.03
	SDT	103.1	107.6	116.5	120.9	125.4	134.2
40	TC	147.7	143.0	133.7	128.9	124.1	114.3
	kW	9.27	9.78	10.88	11.47	12.07	13.32
	SDT	105.1	109.5	118.3	122.8	127.1	135.8
45	TC	161.1	156.2	146.1	141.0	135.8	125.4
	kW	9.51	10.03	11.15	11.73	12.34	13.61
	SDT	107.2	111.6	120.3	124.7	129.0	137.5
50	TC	175.4	170.1	159.3	153.8	148.3	137.1
	kW	9.78	10.30	11.42	12.02	12.63	13.92
	SDT	109.5	113.8	122.4	126.7	130.9	139.4

NOTE:
Condensing unit only ratings are at 45°F SST and 95°F entering–air temperature. EER = 12.0

38AUD14 Dual Circuit — CONDENSER ONLY RATINGS

SST (°F)		AIR TEMP ENT CONDENSER (°F)					
		85	95	100	105	115	120
20	TC	93.24	86.18	82.60	78.94	71.54	67.78
	kW	9.22	10.36	10.96	11.56	12.76	13.37
	SDT	104.4	113.3	117.8	122.2	130.9	135.2
25	TC	103.39	95.91	92.05	88.15	80.16	76.08
	kW	9.42	10.60	11.21	11.83	13.10	13.73
	SDT	106.1	114.9	119.3	123.7	132.3	136.6
30	TC	114.29	106.19	102.04	97.79	89.15	84.74
	kW	9.63	10.84	11.46	12.10	13.41	14.07
	SDT	107.8	116.6	120.9	125.3	133.8	138.0
35	TC	125.69	116.93	112.44	107.84	105.72	93.69
	kW	9.84	11.07	11.71	12.36	13.70	14.38
	SDT	109.5	118.2	122.6	126.8	135.2	139.4
40	TC	137.57	128.07	123.21	118.21	108.08	102.90
	kW	10.05	11.30	11.95	12.61	13.98	14.68
	SDT	111.3	119.9	124.2	128.4	136.7	140.8
45	TC	149.86	139.53	134.26	128.83	117.83	112.22
	kW	10.27	11.53	12.18	12.85	14.24	14.95
	SDT	113.1	121.6	125.8	130.0	138.1	142.1
50	TC	162.51	151.29	145.56	139.64	127.71	121.55
	kW	10.50	11.76	12.42	13.09	14.48	15.20
	SDT	114.9	123.3	127.5	131.6	139.6	143.5

NOTE:
Condensing unit only ratings are at 45°F SST and 95°F entering–air temperature. EER = 13.0

LEGEND:
kW – Compressor Power
SDT – Saturated Discharge Temperature at Compressor (°F)
SST – Saturated Suction Temperature (°F)
TC – Gross Cooling Capacity (1000 Btuh)

38AUZ16 CONDENSER ONLY RATINGS

SST (°F)		AIR TEMPERATURE ENTERING CONDENSER (°F)					
		80	85	95	105	115	125
20	TC	125.5	121.8	114.2	106.6	99.7	79.7
	kW	10.5	11.2	12.6	14.2	16.0	17.5
	SDT	98.6	103.4	113.0	122.7	134.9	136.0
25	TC	138.7	134.7	126.5	118.1	109.3	98.5
	kW	10.7	11.4	12.8	14.3	16.0	17.9
	SDT	100.0	104.7	114.2	123.6	132.9	140.5
30	TC	152.9	148.6	139.8	130.7	120.9	104.9
	kW	10.9	11.6	13.0	14.6	16.2	17.8
	SDT	101.4	106.2	115.5	125.0	133.6	139.4
35	TC	168.2	163.5	154.1	144.2	133.6	121.2
	kW	11.2	11.8	13.2	14.8	16.5	18.1
	SDT	102.9	107.5	117.0	126.2	134.8	142.1
40	TC	184.9	179.4	169.3	158.7	147.6	135.1
	kW	11.5	12.0	13.5	15.1	16.8	18.5
	SDT	105.2	108.9	118.5	127.7	136.7	144.5
45	TC	202.1	196.7	185.7	174.3	162.5	150.4
	kW	11.7	12.4	13.9	15.6	17.5	19.6
	SDT	106.4	111.2	120.9	130.7	140.4	150.2
50	TC	220.6	214.7	202.1	190.0	174.6	159.6
	kW	11.9	12.6	13.9	15.4	16.9	18.5
	SDT	107.2	111.7	120.4	129.4	136.9	144.9

NOTE:
Condensing unit only ratings are at 45°F SST and 95°F entering–air temperature. EER = 12.7

38AUD16 Dual Circuit CONDENSER ONLY RATINGS

SST (°F)		AIR TEMPERATURE ENTERING CONDENSER (°F)					
		80	85	95	105	115	125
20	TC	127.6	123.7	116.0	108.1	99.7	90.2
	kW	10.0	10.6	11.9	13.4	14.9	16.6
	SDT	96.0	100.5	109.8	119.2	128.3	137.0
25	TC	140.9	136.7	128.3	119.5	110.4	101.2
	kW	10.0	10.6	11.9	13.4	14.9	16.6
	SDT	96.0	100.5	109.8	119.2	128.3	137.0
30	TC	155.0	150.5	141.3	132.0	122.3	111.4
	kW	10.4	11.0	12.3	13.7	15.3	17.0
	SDT	98.7	103.3	112.4	121.5	130.6	139.1
35	TC	170.1	165.3	155.4	145.2	134.4	123.3
	kW	10.6	11.2	12.5	14.0	15.5	17.2
	SDT	100.1	104.7	113.8	122.8	131.7	140.4
40	TC	186.3	181.0	170.3	159.0	147.3	134.9
	kW	10.8	11.4	12.8	14.2	15.8	17.4
	SDT	101.6	106.1	115.1	124.0	132.8	141.4
45	TC	203.4	197.6	185.7	173.5	160.6	147.2
	kW	11.1	11.7	13.0	14.4	16.0	17.6
	SDT	103.2	107.6	116.5	125.4	134.0	142.5
50	TC	221.4	214.9	202.0	188.6	174.5	159.7
	kW	11.4	12.0	13.3	14.7	16.2	17.9
	SDT	104.8	109.2	118.0	126.7	135.2	143.5

NOTE:
Condensing unit only ratings are at 45°F SST and 95°F entering–air temperature. EER = 13.0

LEGEND:
kW – Compressor Power
SDT – Saturated Discharge Temperature at Compressor (°F)
SST – Saturated Suction Temperature (°F)
TC – Gross Cooling Capacity (1000 Btuh)

38AUZ25 — CONDENSER ONLY RATINGS

SST (°F)		AIR TEMPERATURE ENTERING CONDENSER (°F)					
		80	85	95	105	115	125
20	TC	159.2	154.5	144.5	133.9	122.5	110.2
	kW	13.0	13.7	15.3	17.1	19.2	21.5
	SDT	97.3	101.8	110.6	119.3	127.9	136.5
25	TC	176.1	171.0	160.2	148.8	136.5	123.2
	kW	13.2	14.0	15.6	17.4	19.5	21.8
	SDT	98.9	103.3	112.0	120.7	129.2	137.6
30	TC	194.2	188.6	176.9	164.5	151.3	136.9
	kW	13.5	14.3	15.9	17.7	19.7	22.0
	SDT	100.6	104.9	113.6	122.1	130.5	138.8
35	TC	213.5	207.4	194.7	181.2	166.8	151.2
	kW	13.8	14.6	16.2	18.0	20.0	22.3
	SDT	102.4	106.7	115.2	123.6	131.9	140.1
40	TC	234.1	227.4	213.5	198.8	183.1	166.1
	kW	14.2	14.9	16.5	18.3	20.3	22.6
	SDT	104.3	108.5	116.9	125.2	133.3	141.4
45	TC	255.9	248.6	233.3	217.3	200.1	181.7
	kW	14.6	15.3	16.9	18.7	20.7	22.9
	SDT	106.3	110.5	118.7	126.8	134.9	142.7
50	TC	279.0	270.9	254.2	236.7	218.1	197.8
	kW	15.1	15.8	17.3	19.1	21.1	23.2
	SDT	108.5	112.5	120.6	128.6	136.5	144.1

NOTE:
Condensing unit only ratings are at 45°F SST and 95°F entering–air temperature. EER = 12.9

38AUD25 Dual Circuit — CONDENSER ONLY RATINGS

SST (°F)		AIR TEMPERATURE ENTERING CONDENSER (°F)					
		80	85	95	105	115	125
20	TC	160.3	155.5	145.3	134.3	122.5	109.6
	kW	12.7	13.4	15.0	16.8	18.8	21.1
	SDT	97.0	101.5	110.3	119.1	127.7	136.3
25	TC	177.2	171.9	160.8	149.0	136.3	122.3
	kW	12.7	13.4	15.0	16.8	18.8	21.1
	SDT	97.0	101.5	110.3	119.1	127.7	136.3
30	TC	195.1	189.4	177.4	164.5	150.7	135.6
	kW	13.2	13.9	15.5	17.3	19.3	21.5
	SDT	100.3	104.6	113.3	121.8	130.3	138.6
35	TC	214.3	208.0	194.9	180.9	165.9	149.5
	kW	13.5	14.3	15.8	17.6	19.6	21.8
	SDT	102.1	106.3	114.9	123.3	131.7	139.8
40	TC	234.6	227.7	213.4	198.2	181.7	163.9
	kW	13.9	14.6	16.2	17.9	19.9	22.1
	SDT	104.0	108.2	116.6	124.9	133.1	141.1
45	TC	256.3	258.7	242.3	224.9	206.2	186.1
	kW	14.3	15.2	16.7	18.5	20.4	22.5
	SDT	106.0	111.1	119.2	127.4	135.4	143.1
50	TC	279.1	272.0	254.7	236.3	216.6	195.4
	kW	14.7	15.5	17.0	18.7	20.6	22.7
	SDT	108.1	112.3	120.4	128.4	136.4	143.9

NOTE:
Condensing unit only ratings are at 45°F SST and 95°F entering–air temperature. EER = 13.0

LEGEND:
kW – Compressor Power
SDT – Saturated Discharge Temperature at Compressor (°F)
SST – Saturated Suction Temperature (°F)
TC – Gross Cooling Capacity (1000 Btuh)

38AUZ07 - 40RUA07 **COMBINATION RATINGS**

				AMBIENT TEMPERATURE														
				85			95			105			115			125		
				EA (db)			EA (db)			EA (db)			EA (db)			EA (db)		
				75	80	85	75	80	85	75	80	85	75	80	85	75	80	85
1800 Cfm	EA (wb)	58	THC	65.8	65.8	74.1	63.4	63.4	71.4	60.7	60.7	68.3	58.3	58.3	65.7	54.7	54.7	61.6
			SHC	57.4	65.8	74.1	55.3	63.4	71.4	53.0	60.7	68.3	50.9	58.3	65.7	47.8	54.7	61.6
		62	THC	68.1	68.1	70.7	65.2	65.2	69.2	62.0	62.0	67.6	58.1	58.1	65.7	54.6	54.6	55.4
			SHC	51.9	61.3	70.7	50.4	59.8	69.2	48.9	58.3	67.6	47.1	56.4	65.7	36.3	45.9	55.4
		67	THC	74.0	74.0	74.0	70.9	70.9	70.9	67.3	67.3	67.3	63.4	63.4	63.4	56.7	56.7	56.7
			SHC	42.3	51.8	61.3	41.0	50.5	59.9	39.5	49.0	58.4	37.9	47.3	56.8	35.3	44.9	54.4
		72	THC	80.7	80.7	80.7	77.3	77.3	77.3	73.6	73.6	73.6	69.4	69.4	69.4	63.2	63.2	63.2
			SHC	32.7	42.2	51.8	31.4	40.9	50.4	30.0	39.5	49.0	28.4	37.9	47.4	26.2	35.7	45.3
		76	THC	–	86.2	86.2	–	82.6	82.6	–	78.6	78.6	–	74.3	74.3	–	70.7	70.7
			SHC	–	34.5	44.3	–	33.2	43.0	–	31.8	41.6	–	30.3	40.0	–	29.0	38.7
2100 Cfm	EA (wb)	58	THC	69.0	69.0	77.8	66.5	66.5	74.9	63.7	63.7	71.8	61.2	61.2	69.0	–	–	–
			SHC	60.3	69.0	77.8	58.0	66.5	74.9	55.6	63.7	71.8	53.5	61.2	69.0	–	–	–
		62	THC	70.2	70.2	77.1	67.2	67.2	75.5	64.0	64.0	73.6	60.4	60.4	70.7	–	–	–
			SHC	55.7	66.4	77.1	54.2	64.8	75.5	52.5	63.0	73.6	50.2	60.4	70.7	–	–	–
		67	THC	75.9	75.9	75.9	72.6	72.6	72.6	68.9	68.9	68.9	64.8	64.8	64.8	59.1	59.1	59.9
			SHC	44.8	55.7	66.5	43.4	54.3	65.1	41.9	52.8	63.6	40.3	51.1	62.0	38.1	49.0	59.9
		72	THC	82.5	82.5	82.5	79.0	79.0	79.0	75.2	75.2	75.2	70.9	70.9	70.9	63.9	63.9	63.9
			SHC	33.7	44.6	55.5	32.4	43.3	54.2	31.0	41.8	52.7	29.4	40.3	51.1	26.9	37.9	48.8
		76	THC	–	88.1	88.1	–	84.3	84.3	–	80.2	80.2	–	75.5	75.5	–	71.8	71.8
			SHC	–	35.8	47.0	–	34.5	45.6	–	33.0	44.2	–	31.4	42.5	–	30.2	41.2
2400 Cfm	EA (wb)	58	THC	71.7	71.7	80.8	69.0	69.0	77.8	66.1	66.1	74.5	62.6	62.6	70.6	58.9	58.9	66.3
			SHC	62.6	71.7	80.8	60.3	69.0	77.8	57.7	66.1	74.5	54.7	62.6	70.6	51.4	58.9	66.3
		62	THC	72.0	72.0	82.7	69.1	69.1	80.8	66.2	66.2	77.4	63.0	63.0	73.6	–	–	–
			SHC	59.0	70.9	82.7	57.4	69.1	80.8	55.0	66.2	77.4	52.3	63.0	73.6	–	–	–
		67	THC	77.3	77.3	77.3	74.0	74.0	74.0	70.2	70.2	70.2	66.1	66.1	66.9	62.5	62.5	65.0
			SHC	47.1	59.3	71.5	45.7	57.9	70.1	44.2	56.4	68.6	42.6	54.7	66.9	41.0	53.0	65.0
		72	THC	84.0	84.0	84.0	80.4	80.4	80.4	76.4	76.4	76.4	71.8	71.8	71.8	67.5	67.5	67.5
			SHC	34.6	46.9	59.1	33.3	45.5	57.8	31.9	44.1	56.3	30.2	42.4	54.6	28.7	40.8	52.9
		76	THC	–	89.5	89.5	–	85.7	85.7	–	81.4	81.4	–	76.7	76.7	–	–	–
			SHC	–	36.9	49.4	–	35.6	48.1	–	34.2	46.6	–	32.6	45.0	–	–	–
2700 Cfm	EA (wb)	58	THC	73.9	73.9	83.3	71.2	71.2	80.2	68.1	68.1	76.7	64.8	64.8	73.0	58.6	58.6	66.0
			SHC	64.6	73.9	83.3	62.2	71.2	80.2	59.5	68.1	76.7	56.5	64.8	73.0	51.2	58.6	66.0
		62	THC	74.0	74.0	86.5	71.3	71.3	83.3	68.2	68.2	79.7	64.8	64.8	75.8	–	–	–
			SHC	61.5	74.0	86.5	59.2	71.3	83.3	56.6	68.2	79.7	53.8	64.8	75.8	–	–	–
		67	THC	78.5	78.5	78.5	75.1	75.1	75.1	71.2	71.2	73.2	67.0	67.0	71.5	63.2	63.2	69.4
			SHC	49.3	62.7	76.2	47.9	61.3	74.8	46.4	59.8	73.2	44.7	58.1	71.5	43.0	56.2	69.4
		72	THC	85.1	85.1	85.1	81.4	81.4	81.4	77.3	77.3	77.3	72.6	72.6	72.6	65.3	65.3	65.3
			SHC	35.5	49.0	62.5	34.2	47.6	61.1	32.7	46.1	59.6	31.1	44.5	57.9	28.6	42.2	55.7
		76	THC	–	90.7	90.7	–	86.7	86.7	–	82.3	82.3	–	–	–	–	–	–
			SHC	–	38.1	51.8	–	36.7	50.4	–	35.3	48.9	–	–	–	–	–	–
3000 Cfm	EA (wb)	58	THC	75.9	75.9	85.5	73.0	73.0	82.3	69.8	69.8	78.7	66.3	66.3	74.7	62.4	62.4	70.4
			SHC	66.3	75.9	85.5	63.8	73.0	82.3	61.0	69.8	78.7	57.9	66.3	74.7	54.5	62.4	70.4
		62	THC	75.9	75.9	88.8	73.1	73.1	85.4	69.9	69.9	81.7	66.4	66.4	77.6	60.2	60.2	70.4
			SHC	63.1	75.9	88.8	60.7	73.1	85.4	58.0	69.9	81.7	55.1	66.4	77.6	50.0	60.2	70.4
		67	THC	79.5	79.5	80.7	76.0	76.0	79.3	72.1	72.1	77.6	67.9	67.9	75.7	63.7	63.7	73.5
			SHC	51.4	66.0	80.7	49.9	64.6	79.3	48.4	63.0	77.6	46.7	61.2	75.7	44.8	59.2	73.5
		72	THC	86.1	86.1	86.1	82.3	82.3	82.3	78.0	78.0	78.0	73.3	73.3	73.3	69.6	69.6	69.6
			SHC	36.3	51.0	65.8	35.0	49.7	64.4	33.5	48.1	62.8	31.9	46.5	61.1	30.5	44.9	59.3
		76	THC	–	91.6	91.6	–	87.6	87.6	–	–	–	–	–	–	–	–	–
			SHC	–	39.1	54.0	–	37.8	52.7	–	–	–	–	–	–	–	–	–

– Not operational
THC – Total Cooling Capacity, Gross (1,000 Btuh)
SHC – Sensible Cooling Capacity, Gross (1,000 Btuh)

38AU

PERFORMANCE DATA (cont.)

38AUZ07 - 40RUA08 COMBINATION RATINGS

				AMBIENT TEMPERATURE														
				85			95			105			115			125		
				EA (db)			EA (db)			EA (db)			EA (db)			EA (db)		
				75	80	85	75	80	85	75	80	85	75	80	85	75	80	85
2250 Cfm	EA (wb)	58	THC	71.6	71.6	80.7	69.1	69.1	77.9	66.2	66.2	74.6	63.2	63.2	72.2	–	–	–
			SHC	62.5	71.6	80.7	60.3	69.1	77.9	57.8	66.2	74.6	55.0	63.2	72.2	–	–	–
		62	THC	72.5	72.5	81.5	69.6	69.6	79.6	66.6	66.6	76.6	63.2	63.2	73.2	–	–	–
			SHC	58.5	70.0	81.5	56.9	68.2	79.6	54.6	65.6	76.6	52.1	62.7	73.2	–	–	–
		67	THC	78.1	78.1	78.1	74.8	74.8	74.8	71.2	71.2	71.2	67.0	67.0	67.7	60.9	60.9	64.5
			SHC	46.9	58.7	70.5	45.6	57.4	69.1	44.1	55.9	67.6	42.4	54.2	66.0	40.1	52.0	63.8
		72	THC	84.9	84.9	84.9	81.4	81.4	81.4	77.4	77.4	77.4	73.1	73.1	73.1	68.9	68.9	68.9
			SHC	34.9	46.7	58.6	33.6	45.4	57.3	32.1	43.9	55.8	30.5	42.3	54.1	29.0	40.7	52.5
		76	THC	–	90.6	90.6	–	86.9	86.9	–	82.5	82.5	–	77.1	77.1	–	–	–
			SHC	–	37.1	49.1	–	35.9	47.9	–	33.5	43.4	–	31.9	41.8	–	–	–
2600 Cfm	EA (wb)	58	THC	74.8	74.8	84.2	72.1	72.1	81.3	69.0	69.0	77.8	65.7	65.7	74.0	62.2	62.2	70.0
			SHC	65.3	74.8	84.2	62.9	72.1	81.3	60.3	69.0	77.8	57.3	65.7	74.0	54.3	62.2	70.0
		62	THC	74.9	74.9	87.2	72.1	72.1	84.3	69.1	69.1	80.8	65.7	65.7	76.8	61.7	61.7	72.1
			SHC	62.0	74.6	87.2	60.0	72.1	84.3	57.4	69.1	80.8	54.6	65.7	76.8	51.2	61.7	72.1
		67	THC	79.8	79.8	79.8	76.3	76.3	76.4	72.6	72.6	74.2	68.4	68.4	71.9	63.9	63.9	69.8
			SHC	49.7	63.1	76.5	48.3	61.8	75.1	46.8	60.2	73.6	45.1	58.5	71.9	43.3	56.5	69.8
		72	THC	86.5	86.5	86.5	82.9	82.9	82.9	78.8	78.8	78.8	74.3	74.3	74.3	69.5	69.5	69.5
			SHC	36.0	49.4	62.9	34.7	48.1	61.6	33.2	46.6	60.1	31.6	45.0	58.4	29.9	43.3	56.7
		76	THC	–	92.3	92.3	–	87.7	87.7	–	–	–	–	–	–	–	–	–
			SHC	–	38.5	52.2	–	36.5	49.2	–	–	–	–	–	–	–	–	–
3000 Cfm	EA (wb)	58	THC	77.6	77.6	87.4	74.8	74.8	84.2	71.5	71.5	80.6	67.9	67.9	76.5	64.9	64.9	73.1
			SHC	67.7	77.6	87.4	65.3	74.8	84.2	62.5	71.5	80.6	59.3	67.9	76.5	56.7	64.9	73.1
		62	THC	77.7	77.7	90.8	74.8	74.8	87.5	71.6	71.6	83.7	67.9	67.9	79.4	64.9	64.9	75.9
			SHC	64.5	77.7	90.8	62.1	74.8	87.5	59.5	71.6	83.7	56.4	67.9	79.4	53.9	64.9	75.9
		67	THC	81.2	81.2	83.0	77.7	77.7	81.6	73.9	73.9	80.0	69.6	69.6	78.0	65.3	65.3	74.4
			SHC	52.7	67.8	83.0	51.3	66.4	81.6	49.8	64.9	80.0	48.0	63.0	78.0	44.5	59.4	74.4
		72	THC	87.9	87.9	87.9	84.2	84.2	84.2	80.0	80.0	80.0	75.3	75.3	75.3	70.2	70.2	70.2
			SHC	37.1	52.3	67.6	35.8	51.0	66.2	34.3	49.5	64.7	32.7	47.9	63.0	31.0	46.1	61.2
		76	THC	–	–	–	–	–	–	–	–	–	–	–	–	–	–	–
			SHC	–	–	–	–	–	–	–	–	–	–	–	–	–	–	–
3400 Cfm	EA (wb)	58	THC	79.7	79.7	89.8	76.8	76.8	86.4	73.4	73.4	82.7	69.6	69.6	78.4	64.8	64.8	73.0
			SHC	69.6	79.7	89.8	67.0	76.8	86.4	64.1	73.4	82.7	60.8	69.6	78.4	56.6	64.8	73.0
		62	THC	79.8	79.8	93.3	76.8	76.8	89.8	73.5	73.5	85.9	69.7	69.7	81.4	65.6	65.6	76.8
			SHC	66.3	79.8	93.3	63.8	76.8	89.8	61.0	73.5	85.9	57.8	69.7	81.4	54.5	65.6	76.8
		67	THC	82.3	82.3	88.8	78.8	78.8	87.3	74.9	74.9	85.5	70.6	70.6	83.2	–	–	–
			SHC	55.4	72.1	88.8	53.9	70.6	87.3	52.4	68.9	85.5	50.5	66.8	83.2	–	–	–
		72	THC	88.9	88.9	88.9	85.1	85.1	85.1	80.8	80.8	80.8	76.1	76.1	76.1	–	–	–
			SHC	38.2	55.0	71.9	36.9	53.7	70.5	35.4	52.2	69.0	33.8	50.5	67.3	–	–	–
		76	THC	–	–	–	–	–	–	–	–	–	–	–	–	–	–	–
			SHC	–	–	–	–	–	–	–	–	–	–	–	–	–	–	–
3750 Cfm	EA (wb)	58	THC	81.5	81.5	91.9	78.5	78.5	88.4	75.0	75.0	84.5	71.1	71.1	80.1	64.7	64.7	72.9
			SHC	71.2	81.5	91.9	68.5	78.5	88.4	65.5	75.0	84.5	62.1	71.1	80.1	56.5	64.7	72.9
		62	THC	81.6	81.6	95.4	78.5	78.5	91.8	75.1	75.1	87.8	71.2	71.2	83.2	66.3	66.3	77.5
			SHC	67.8	81.6	95.4	65.2	78.5	91.8	62.4	75.1	87.8	59.1	71.2	83.2	55.1	66.3	77.5
		67	THC	83.2	83.2	93.9	79.7	79.7	92.2	75.8	75.8	90.3	71.5	71.5	87.7	–	–	–
			SHC	57.7	75.8	93.9	56.2	74.2	92.2	54.6	72.4	90.3	52.6	70.2	87.7	–	–	–
		72	THC	89.7	89.7	89.7	85.8	85.8	85.8	81.5	81.5	81.5	76.8	76.8	76.8	–	–	–
			SHC	39.1	57.4	75.7	37.8	56.0	74.3	36.3	54.5	72.7	34.7	52.8	71.0	–	–	–
		76	THC	–	–	–	–	–	–	–	–	–	–	–	–	–	–	–
			SHC	–	–	–	–	–	–	–	–	–	–	–	–	–	–	–

– Not operational
THC – Total Cooling Capacity, Gross (1,000 Btuh)
SHC – Sensible Cooling Capacity, Gross (1,000 Btuh)

38AUZ08 - 40RUA08 **COMBINATION RATINGS**

				AMBIENT TEMPERATURE														
				85			95			105			115			125		
				EA (db)			EA (db)			EA (db)			EA (db)			EA (db)		
				75	80	85	75	80	85	75	80	85	75	80	85	75	80	85
2250 Cfm	EA (wb)	58	THC	84.6	84.6	95.4	81.7	81.7	92.1	78.5	78.5	88.5	75.5	75.5	85.1	70.7	70.7	79.7
			SHC	73.9	84.6	95.4	71.3	81.7	92.1	68.5	78.5	88.5	65.9	75.5	85.1	61.7	70.7	79.7
		62	THC	88.2	88.2	89.4	84.6	84.6	87.6	80.7	80.7	85.6	76.9	76.9	83.6	73.2	73.2	81.3
			SHC	66.1	77.7	89.4	64.3	75.9	87.6	62.4	74.0	85.6	60.5	72.0	83.6	58.5	69.9	81.3
		67	THC	95.5	95.5	95.5	91.5	91.5	91.5	87.3	87.3	87.3	82.7	82.7	82.7	76.1	76.1	76.1
			SHC	54.1	65.8	77.5	52.3	64.1	75.8	50.5	62.2	74.0	48.6	60.3	72.0	46.0	57.8	69.5
		72	THC	103.4	103.4	103.4	99.2	99.2	99.2	94.6	94.6	94.6	89.6	89.6	89.6	82.3	82.3	82.3
			SHC	41.8	53.7	65.5	40.2	52.0	63.8	38.4	50.2	62.0	36.6	48.3	60.1	33.8	45.6	57.4
		76	THC	–	109.9	109.9	–	105.4	105.4	–	100.6	100.6	–	95.3	95.3	–	87.8	87.8
			SHC	–	43.9	56.2	–	42.3	54.7	–	40.6	52.8	–	38.7	50.9	–	36.1	48.3
2625 Cfm	EA (wb)	58	THC	88.7	88.7	99.9	85.6	85.6	96.4	82.1	82.1	92.5	78.7	78.7	88.7	75.4	75.4	85.0
			SHC	77.4	88.7	99.9	74.7	85.6	96.4	71.7	82.1	92.5	68.8	78.7	88.7	65.8	75.4	85.0
		62	THC	90.7	90.7	97.2	87.0	87.0	95.3	83.0	83.0	93.1	78.9	78.9	90.6	75.3	75.3	86.4
			SHC	70.7	84.0	97.2	68.8	82.1	95.3	66.9	80.0	93.1	64.7	77.6	90.6	61.7	74.0	86.4
		67	THC	97.8	97.8	97.8	93.7	93.7	93.7	89.2	89.2	89.2	84.4	84.4	84.4	76.7	76.7	76.7
			SHC	57.0	70.4	83.8	55.3	68.7	82.1	53.4	66.8	80.2	51.5	64.8	78.2	48.6	62.0	75.5
		72	THC	105.7	105.7	105.7	101.3	101.3	101.3	96.5	96.5	96.5	91.5	91.5	91.5	86.2	86.2	86.2
			SHC	43.0	56.5	70.0	41.4	54.9	68.3	39.6	53.0	66.5	37.8	51.2	64.5	35.8	49.2	62.5
		76	THC	–	112.2	112.2	–	107.6	107.6	–	102.5	102.5	–	97.0	97.0	–	–	–
			SHC	–	45.4	59.5	–	43.8	57.8	–	42.0	55.9	–	40.2	54.0	–	–	–
3000 Cfm	EA (wb)	58	THC	92.0	92.0	103.7	88.7	88.7	99.9	85.1	85.1	95.9	81.2	81.2	91.5	76.0	76.0	85.7
			SHC	80.3	92.0	103.7	77.4	88.7	99.9	74.3	85.1	95.9	70.9	81.2	91.5	66.4	76.0	85.7
		62	THC	92.9	92.9	104.3	89.2	89.2	102.0	85.1	85.1	99.5	81.4	81.4	95.1	–	–	–
			SHC	74.9	89.6	104.3	72.9	87.4	102.0	70.7	85.1	99.5	67.6	81.4	95.1	–	–	–
		67	THC	99.6	99.6	99.6	95.3	95.3	95.3	90.8	90.8	90.8	86.0	86.0	86.0	79.1	79.1	81.7
			SHC	59.7	74.7	89.8	58.0	73.0	88.0	56.1	71.1	86.1	54.2	69.1	84.1	51.7	66.7	81.7
		72	THC	107.5	107.5	107.5	103.0	103.0	103.0	98.0	98.0	98.0	92.9	92.9	92.9	88.0	88.0	88.0
			SHC	44.1	59.2	74.3	42.5	57.5	72.6	40.7	55.7	70.7	38.8	53.8	68.7	37.0	51.8	66.7
		76	THC	–	114.0	114.0	–	109.1	109.1	–	103.9	103.9	–	98.3	98.3	–	–	–
			SHC	–	46.9	62.4	–	45.2	60.7	–	43.4	58.8	–	41.5	56.8	–	–	–
3375 Cfm	EA (wb)	58	THC	94.8	94.8	106.8	91.3	91.3	102.9	87.5	87.5	98.6	83.4	83.4	94.0	77.9	77.9	87.8
			SHC	82.8	94.8	106.8	79.7	91.3	102.9	76.4	87.5	98.6	72.9	83.4	94.0	68.0	77.9	87.8
		62	THC	94.8	94.8	110.9	91.4	91.4	106.8	87.6	87.6	102.4	83.5	83.5	97.6	79.3	79.3	92.7
			SHC	78.8	94.8	110.9	75.9	91.4	106.8	72.8	87.6	102.4	69.3	83.5	97.6	65.9	79.3	92.7
		67	THC	101.0	101.0	101.0	96.6	96.6	96.6	92.0	92.0	92.0	87.0	87.0	89.6	82.8	82.8	87.3
			SHC	62.3	78.9	95.4	60.6	77.1	93.7	58.7	75.2	91.7	56.7	73.2	89.6	54.8	71.0	87.3
		72	THC	108.9	108.9	108.9	104.3	104.3	104.3	99.2	99.2	99.2	93.8	93.8	93.8	86.1	86.1	86.1
			SHC	45.2	61.7	78.3	43.5	60.0	76.6	41.7	58.2	74.7	39.7	56.2	72.6	37.1	53.6	70.0
		76	THC	–	115.4	115.4	–	110.4	110.4	–	105.1	105.1	–	99.3	99.3	–	92.2	92.2
			SHC	–	48.2	65.2	–	46.5	63.4	–	44.7	61.6	–	42.7	59.5	–	40.4	57.1
3750 Cfm	EA (wb)	58	THC	97.1	97.1	109.5	93.5	93.5	105.4	89.6	89.6	101.0	85.3	85.3	96.1	–	–	–
			SHC	84.8	97.1	109.5	81.7	93.5	105.4	78.2	89.6	101.0	74.5	85.3	96.1	–	–	–
		62	THC	97.2	97.2	113.7	93.6	93.6	109.5	89.7	89.7	104.8	85.5	85.5	100.0	78.2	78.2	91.4
			SHC	80.8	97.2	113.7	77.8	93.6	109.5	74.5	89.7	104.8	71.1	85.5	100.0	64.9	78.2	91.4
		67	THC	102.2	102.2	102.2	97.7	97.7	99.0	93.1	93.1	97.0	88.1	88.1	94.8	–	–	–
			SHC	64.8	82.8	100.8	63.0	81.0	99.0	61.1	79.1	97.0	59.1	77.0	94.8	–	–	–
		72	THC	110.1	110.1	110.1	105.3	105.3	105.3	100.2	100.2	100.2	94.7	94.7	94.7	90.0	90.0	90.0
			SHC	46.1	64.2	82.2	44.4	62.4	80.4	42.6	60.5	78.4	40.7	58.5	76.4	38.9	56.6	74.2
		76	THC	–	116.5	116.5	–	111.5	111.5	–	106.0	106.0	–	100.1	100.1	–	90.8	90.8
			SHC	–	49.4	67.8	–	47.7	66.0	–	45.9	64.1	–	43.9	62.0	–	40.8	58.8

– Not operational
THC – Total Cooling Capacity, Gross (1,000 Btuh)
SHC – Sensible Cooling Capacity, Gross (1,000 Btuh)

PERFORMANCE DATA (cont.)

38AUZ08 - 40RUA12 COMBINATION RATINGS

				AMBIENT TEMPERATURE														
				85			95			105			115			125		
				EA (db)			EA (db)			EA (db)			EA (db)			EA (db)		
				75	80	85	75	80	85	75	80	85	75	80	85	75	80	85
3000 Cfm	EA (wb)	58	THC	93.7	93.7	105.5	90.3	90.3	101.8	86.7	86.7	97.7	82.7	82.7	93.2	–	–	–
			SHC	81.8	93.7	105.5	78.9	90.3	101.8	75.7	86.7	97.7	72.2	82.7	93.2	–	–	–
		62	THC	94.5	94.5	106.5	90.8	90.8	104.2	86.8	86.8	101.5	83.0	83.0	97.0	78.0	78.0	91.2
			SHC	76.4	91.4	106.5	74.4	89.3	104.2	72.1	86.8	101.5	68.9	83.0	97.0	64.8	78.0	91.2
		67	THC	101.3	101.3	101.3	97.0	97.0	97.0	92.4	92.4	92.4	87.7	87.7	87.7	80.4	80.4	83.5
			SHC	60.9	76.3	91.7	59.2	74.5	89.9	57.3	72.7	88.0	55.4	70.7	86.0	52.7	68.1	83.5
		72	THC	109.4	109.4	109.4	104.9	104.9	104.9	100.0	100.0	100.0	94.7	94.7	94.7	87.1	87.1	87.1
			SHC	44.9	60.4	75.8	43.3	58.7	74.1	41.5	56.9	72.2	39.6	54.9	70.2	36.9	52.2	67.6
		76	THC	–	116.1	116.1	–	111.3	111.3	–	106.1	106.1	–	100.4	100.4	–	–	–
			SHC	–	47.7	63.5	–	46.0	61.8	–	44.3	60.0	–	42.3	57.9	–	–	–
3500 Cfm	EA (wb)	58	THC	97.4	97.4	109.7	93.9	93.9	105.8	90.0	90.0	101.4	85.9	85.9	96.8	79.7	79.7	89.8
			SHC	85.0	97.4	109.7	82.0	93.9	105.8	78.6	90.0	101.4	75.0	85.9	96.8	69.6	79.7	89.8
		62	THC	97.5	97.5	114.0	93.9	93.9	109.9	90.1	90.1	105.4	86.0	86.0	100.5	82.6	82.6	96.6
			SHC	81.0	97.5	114.0	78.0	93.9	109.9	74.8	90.1	105.4	71.4	86.0	100.5	68.6	82.6	96.6
		67	THC	103.2	103.2	103.2	98.8	98.8	98.8	94.2	94.2	95.8	89.1	89.1	93.7	82.7	82.7	91.4
			SHC	64.5	82.1	99.6	62.8	80.3	97.8	60.9	78.4	95.8	58.9	76.3	93.7	56.5	73.9	91.4
		72	THC	111.2	111.2	111.2	106.6	106.6	106.6	101.6	101.6	101.6	96.2	96.2	96.2	88.8	88.8	88.8
			SHC	46.3	63.9	81.4	44.7	62.2	79.7	42.9	60.3	77.8	40.9	58.3	75.8	38.4	55.8	73.2
		76	THC	–	117.9	117.9	–	113.0	113.0	–	107.6	107.6	–	101.8	101.8	–	–	–
			SHC	–	49.5	67.4	–	47.8	65.6	–	46.0	63.7	–	44.0	61.6	–	–	–
4000 Cfm	EA (wb)	58	THC	100.4	100.4	113.1	96.7	96.7	109.0	92.7	92.7	104.5	88.4	88.4	99.6	82.0	82.0	92.4
			SHC	87.7	100.4	113.1	84.4	96.7	109.0	80.9	92.7	104.5	77.2	88.4	99.6	71.6	82.0	92.4
		62	THC	100.4	100.4	117.4	96.8	96.8	113.2	92.8	92.8	108.5	88.4	88.4	103.4	81.7	81.7	95.5
			SHC	83.4	100.4	117.4	80.4	96.8	113.2	77.1	92.8	108.5	73.5	88.4	103.4	67.8	81.7	95.5
		67	THC	104.7	104.7	107.0	100.3	100.3	105.1	95.5	95.5	103.1	90.4	90.4	100.8	82.8	82.8	94.5
			SHC	67.9	87.5	107.0	66.1	85.6	105.1	64.2	83.6	103.1	62.2	81.5	100.8	54.7	74.6	94.5
		72	THC	112.7	112.7	112.7	108.0	108.0	108.0	102.8	102.8	102.8	97.3	97.3	97.3	89.9	89.9	89.9
			SHC	47.7	67.2	86.7	46.0	65.5	84.9	44.1	63.6	83.0	42.2	61.6	80.9	39.7	59.0	78.4
		76	THC	–	119.4	119.4	–	114.3	114.3	–	108.7	108.7	–	103.0	103.0	–	94.3	94.3
			SHC	–	51.2	71.0	–	49.5	69.2	–	47.6	67.2	–	45.6	65.1	–	42.8	62.0
4500 Cfm	EA (wb)	58	THC	102.7	102.7	115.7	98.9	98.9	111.5	94.8	94.8	106.8	90.3	90.3	101.7	85.1	85.1	95.9
			SHC	89.7	102.7	115.7	86.3	98.9	111.5	82.7	94.8	106.8	78.9	90.3	101.7	74.3	85.1	95.9
		62	THC	102.8	102.8	120.2	99.0	99.0	115.7	94.8	94.8	110.9	90.3	90.3	105.6	83.6	83.6	97.8
			SHC	85.4	102.8	120.2	82.2	99.0	115.7	78.8	94.8	110.9	75.1	90.3	105.6	69.5	83.6	97.8
		67	THC	105.9	105.9	113.8	101.5	101.5	111.7	96.7	96.7	109.5	91.6	91.6	106.8	84.0	84.0	100.0
			SHC	71.0	92.4	113.8	69.2	90.5	111.7	67.2	88.3	109.5	65.0	85.9	106.8	57.0	76.0	100.0
		72	THC	113.8	113.8	113.8	109.0	109.0	109.0	103.7	103.7	103.7	98.1	98.1	98.1	89.5	89.5	89.5
			SHC	48.9	70.3	91.7	47.2	68.6	89.9	45.3	66.6	87.9	43.4	64.6	85.7	40.6	61.8	83.1
		76	THC	–	120.4	120.4	–	115.3	115.3	–	109.6	109.6	–	103.9	103.9	–	–	–
			SHC	–	52.7	74.3	–	51.0	72.4	–	49.1	70.3	–	47.1	68.1	–	–	–
5000 Cfm	EA (wb)	58	THC	105.0	105.0	118.3	101.0	101.0	113.9	96.8	96.8	109.0	92.1	92.1	103.8	88.1	88.1	99.3
			SHC	91.7	105.0	118.3	88.2	101.0	113.9	84.5	96.8	109.0	80.5	92.1	103.8	76.9	88.1	99.3
		62	THC	105.1	105.1	122.9	101.1	101.1	118.2	96.8	96.8	113.2	92.2	92.2	107.8	85.5	85.5	100.0
			SHC	87.3	105.1	122.9	84.0	101.1	118.2	80.4	96.8	113.2	76.6	92.2	107.8	71.1	85.5	100.0
		67	THC	107.1	107.1	120.5	102.6	102.6	118.3	97.8	97.8	115.8	92.7	92.7	112.8	–	–	–
			SHC	74.1	97.3	120.5	72.2	95.3	118.3	70.1	93.0	115.8	67.8	90.3	112.8	–	–	–
		72	THC	114.9	114.9	114.9	109.9	109.9	109.9	104.6	104.6	104.6	98.9	98.9	98.9	–	–	–
			SHC	50.1	73.4	96.7	48.4	71.6	94.8	46.5	69.6	92.7	44.6	67.5	90.5	–	–	–
		76	THC	–	121.4	121.4	–	116.2	116.2	–	110.4	110.4	–	104.7	104.7	–	–	–
			SHC	–	54.2	77.5	–	52.4	75.6	–	50.5	73.4	–	48.5	71.1	–	–	–

– Not operational
THC – Total Cooling Capacity, Gross (1,000 Btuh)
SHC – Sensible Cooling Capacity, Gross (1,000 Btuh)

38AUZ12 - 40RUA12 COMBINATION RATINGS

				AMBIENT TEMPERATURE														
				85			95			105			115			125		
				EA (db)			EA (db)			EA (db)			EA (db)			EA (db)		
				75	80	85	75	80	85	75	80	85	75	80	85	75	80	85
3000 Cfm	EA (wb)	58	THC	110.5	110.5	121.5	106.2	106.2	117.1	101.6	101.6	112.4	96.9	96.9	107.5	92.5	92.5	102.9
			SHC	99.4	110.5	121.5	95.3	106.2	117.1	90.9	101.6	112.4	86.3	96.9	107.5	82.0	92.5	102.9
		62	THC	114.0	114.0	114.0	108.8	108.8	111.4	103.3	103.3	108.7	97.6	97.6	105.6	91.2	91.2	101.6
			SHC	92.3	103.2	114.0	89.9	100.6	111.4	87.3	98.0	108.7	84.5	95.1	105.6	80.8	91.2	101.6
		67	THC	123.2	123.2	123.2	117.4	117.4	117.4	111.5	111.5	111.5	105.1	105.1	105.1	–	–	–
			SHC	76.4	86.8	97.2	74.1	84.4	94.7	71.7	81.9	92.1	69.1	79.3	89.4	–	–	–
		72	THC	133.0	133.0	133.0	126.8	126.8	126.8	120.4	120.4	120.4	113.5	113.5	113.5	106.0	106.0	106.0
			SHC	60.2	70.1	79.9	57.9	67.7	77.5	55.6	65.3	74.9	53.2	62.7	72.3	50.5	60.0	69.4
		76	THC	–	140.7	140.7	–	134.2	134.2	–	127.6	127.6	–	120.2	120.2	–	112.3	112.3
			SHC	–	56.4	65.8	–	54.1	63.4	–	51.8	61.0	–	49.3	58.4	–	46.6	55.6
3500 Cfm	EA (wb)	58	THC	115.8	115.8	128.4	111.2	111.2	123.6	106.3	106.3	118.6	101.1	101.1	113.2	94.3	94.3	106.2
			SHC	103.3	115.8	128.4	98.8	111.2	123.6	94.1	106.3	118.6	89.0	101.1	113.2	82.5	94.3	106.2
		62	THC	117.4	117.4	124.5	112.0	112.0	121.6	106.6	106.6	118.3	101.1	101.1	113.2	93.0	93.0	104.8
			SHC	99.5	112.0	124.5	96.9	109.2	121.6	93.8	106.0	118.3	89.0	101.1	113.2	81.2	93.0	104.8
		67	THC	126.1	126.1	126.1	120.0	120.0	120.0	113.8	113.8	113.8	107.2	107.2	107.2	101.0	101.0	101.0
			SHC	81.5	93.4	105.4	79.1	91.0	102.8	76.7	88.4	100.2	74.1	85.8	97.4	71.6	83.2	94.7
		72	THC	135.6	135.6	135.6	129.2	129.2	129.2	122.6	122.6	122.6	115.5	115.5	115.5	108.0	108.0	108.0
			SHC	62.8	74.1	85.4	60.5	71.7	82.9	58.2	69.3	80.4	55.7	66.7	77.7	53.2	64.0	74.9
		76	THC	–	143.2	143.2	–	136.5	136.5	–	129.7	129.7	–	122.1	122.1	–	–	–
			SHC	–	58.4	69.2	–	56.1	66.8	–	53.8	64.4	–	51.3	61.8	–	–	–
4000 Cfm	EA (wb)	58	THC	120.2	120.2	134.3	115.3	115.3	129.2	110.1	110.1	123.8	104.5	104.5	118.0	97.1	97.1	110.4
			SHC	106.1	120.2	134.3	101.4	115.3	129.2	96.4	110.1	123.8	91.0	104.5	118.0	83.9	97.1	110.4
		62	THC	120.5	120.5	133.7	115.3	115.3	129.2	110.2	110.2	123.9	104.6	104.6	118.1	97.0	97.0	110.3
			SHC	105.6	119.7	133.7	101.4	115.3	129.2	96.5	110.2	123.9	91.1	104.6	118.1	83.8	97.0	110.3
		67	THC	128.2	128.2	128.2	122.0	122.0	122.0	115.6	115.6	115.6	108.8	108.8	108.8	101.3	101.3	102.0
			SHC	86.2	99.7	113.2	83.9	97.2	110.6	81.4	94.7	108.0	78.8	92.0	105.1	76.0	89.0	102.0
		72	THC	137.6	137.6	137.6	131.0	131.0	131.0	124.2	124.2	124.2	116.9	116.9	116.9	109.3	109.3	109.3
			SHC	65.2	78.0	90.7	62.9	75.6	88.2	60.6	73.1	85.7	58.1	70.6	83.0	55.6	67.8	80.1
		76	THC	–	145.0	145.0	–	138.2	138.2	–	131.2	131.2	–	–	–	–	–	–
			SHC	–	60.3	72.5	–	58.1	70.1	–	55.8	67.7	–	–	–	–	–	–
4500 Cfm	EA (wb)	58	THC	123.8	123.8	139.3	118.6	118.6	134.0	113.2	113.2	128.4	107.3	107.3	122.2	102.3	102.3	117.1
			SHC	108.2	123.8	139.3	103.2	118.6	134.0	98.0	113.2	128.4	92.4	107.3	122.2	87.6	102.3	117.1
		62	THC	123.9	123.9	139.4	118.7	118.7	134.1	113.3	113.3	128.4	107.4	107.4	122.3	101.8	101.8	116.5
			SHC	108.3	123.9	139.4	103.3	118.7	134.1	98.1	113.3	128.4	92.5	107.4	122.3	87.1	101.8	116.5
		67	THC	130.0	130.0	130.0	123.6	123.6	123.6	117.1	117.1	117.1	110.2	110.2	112.5	102.8	102.8	109.3
			SHC	90.8	105.8	120.9	88.3	103.2	118.2	85.8	100.6	115.4	83.2	97.8	112.5	80.3	94.8	109.3
		72	THC	139.1	139.1	139.1	132.4	132.4	132.4	125.5	125.5	125.5	118.1	118.1	118.1	110.3	110.3	110.3
			SHC	67.4	81.7	95.9	65.2	79.3	93.3	62.9	76.8	90.8	60.4	74.2	88.1	57.8	71.5	85.2
		76	THC	–	146.4	146.4	–	139.6	139.6	–	–	–	–	–	–	–	–	–
			SHC	–	62.2	75.7	–	59.9	73.3	–	–	–	–	–	–	–	–	–
5000 Cfm	EA (wb)	58	THC	126.8	126.8	143.8	121.4	121.4	138.2	115.8	115.8	132.3	109.8	109.8	126.1	103.0	103.0	119.1
			SHC	109.8	126.8	143.8	104.5	121.4	138.2	99.2	115.8	132.3	93.4	109.8	126.1	86.9	103.0	119.1
		62	THC	126.9	126.9	143.9	121.4	121.4	138.2	115.9	115.9	132.4	109.8	109.8	126.2	103.1	103.1	119.2
			SHC	109.8	126.9	143.9	104.6	121.4	138.2	99.3	115.9	132.4	93.5	109.8	126.2	87.0	103.1	119.2
		67	THC	131.4	131.4	131.4	125.0	125.0	125.5	118.4	118.4	122.7	111.5	111.5	119.6	104.1	104.1	116.1
			SHC	95.1	111.7	128.2	92.6	109.1	125.5	90.1	106.4	122.7	87.3	103.4	119.6	84.2	100.1	116.1
		72	THC	140.3	140.3	140.3	133.5	133.5	133.5	126.6	126.6	126.6	119.0	119.0	119.0	111.1	111.1	111.1
			SHC	69.6	85.3	100.9	67.4	82.9	98.4	65.1	80.5	95.9	62.6	77.9	93.2	60.0	75.1	90.3
		76	THC	–	147.6	147.6	–	–	–	–	–	–	–	–	–	–	–	–
			SHC	–	64.0	78.8	–	–	–	–	–	–	–	–	–	–	–	–

– Not operational
THC – Total Cooling Capacity, Gross (1,000 Btuh)
SHC – Sensible Cooling Capacity, Gross (1,000 Btuh)

PERFORMANCE DATA (cont.)

38AUZ12 - 40RUA14 COMBINATION RATINGS

				AMBIENT TEMPERATURE														
				85			95			105			115			125		
				EA (db)			EA (db)			EA (db)			EA (db)			EA (db)		
				75	80	85	75	80	85	75	80	85	75	80	85	75	80	85
3750 Cfm	EA (wb)	58	THC	119.7	119.7	132.9	115.2	115.2	128.3	110.5	110.5	123.4	105.3	105.3	118.0	97.9	97.9	110.4
			SHC	106.5	119.7	132.9	102.2	115.2	128.3	97.6	110.5	123.4	92.6	105.3	118.0	85.5	97.9	110.4
		62	THC	121.2	121.2	130.3	116.0	116.0	127.0	110.8	110.8	122.9	105.4	105.4	118.1	98.7	98.7	111.1
			SHC	104.0	117.2	130.3	101.0	114.0	127.0	97.2	110.1	122.9	92.7	105.4	118.1	86.2	98.7	111.1
		67	THC	130.0	130.0	130.0	124.4	124.4	124.4	118.5	118.5	118.5	112.0	112.0	112.0	104.9	104.9	104.9
			SHC	85.3	97.8	110.3	83.1	95.5	108.0	80.8	93.1	105.5	78.3	90.5	102.7	75.6	87.7	99.8
		72	THC	139.4	139.4	139.4	133.7	133.7	133.7	127.7	127.7	127.7	120.9	120.9	120.9	113.5	113.5	113.5
			SHC	65.3	77.1	88.8	63.3	75.0	86.7	61.2	72.8	84.4	58.9	70.4	81.8	56.3	67.7	79.0
		76	THC	–	–	–	–	–	–	–	–	–	–	–	–	–	–	–
			SHC	–	–	–	–	–	–	–	–	–	–	–	–	–	–	–
4300 Cfm	EA (wb)	58	THC	124.1	124.1	138.8	119.4	119.4	134.1	114.5	114.5	128.9	109.0	109.0	123.2	100.5	100.5	114.4
			SHC	109.2	124.1	138.8	104.8	119.4	134.1	100.0	114.5	128.9	94.8	109.0	123.2	86.6	100.5	114.4
		62	THC	124.5	124.5	138.3	119.5	119.5	134.1	114.5	114.5	128.9	109.1	109.1	123.3	101.0	101.0	114.9
			SHC	108.7	123.5	138.3	104.9	119.5	134.1	100.1	114.5	128.9	94.9	109.1	123.3	87.1	101.0	114.9
		67	THC	132.1	132.1	132.1	126.4	126.4	126.4	120.4	120.4	121.1	113.8	113.8	115.6	106.5	106.5	109.5
			SHC	90.7	104.9	119.0	88.5	102.5	116.6	86.1	100.1	114.1	83.6	97.4	111.2	80.7	94.5	108.1
		72	THC	141.3	141.3	141.3	135.5	135.5	135.5	129.5	129.5	129.5	122.6	122.6	122.6	114.3	114.3	114.3
			SHC	68.1	81.4	94.7	66.1	79.3	92.6	64.0	77.1	90.3	61.7	74.7	87.7	57.6	69.7	81.7
		76	THC	–	–	–	–	–	–	–	–	–	–	–	–	–	–	–
			SHC	–	–	–	–	–	–	–	–	–	–	–	–	–	–	–
5000 Cfm	EA (wb)	58	THC	128.9	128.9	145.7	124.1	124.1	140.7	118.9	118.9	135.3	113.2	113.2	129.3	106.8	106.8	122.7
			SHC	112.1	128.9	145.7	107.5	124.1	140.7	102.5	118.9	135.3	97.0	113.2	129.3	90.9	106.8	122.7
		62	THC	129.0	129.0	145.8	124.2	124.2	140.7	119.0	119.0	135.3	113.3	113.3	129.4	106.8	106.8	122.7
			SHC	112.2	129.0	145.8	107.6	124.2	140.7	102.6	119.0	135.3	97.1	113.3	129.4	91.0	106.8	122.7
		67	THC	134.4	134.4	134.4	128.6	128.6	128.6	122.5	122.5	124.7	115.8	115.8	121.8	108.4	108.4	118.5
			SHC	97.3	113.6	129.8	95.1	111.2	127.4	92.7	108.7	124.7	90.1	105.9	121.8	87.0	102.8	118.5
		72	THC	143.4	143.4	143.4	137.5	137.5	137.5	131.3	131.3	131.3	124.3	124.3	124.3	–	–	–
			SHC	71.6	86.8	102.0	69.6	84.7	99.9	67.5	82.6	97.6	65.2	80.1	95.0	–	–	–
		76	THC	–	–	–	–	–	–	–	–	–	–	–	–	–	–	–
			SHC	–	–	–	–	–	–	–	–	–	–	–	–	–	–	–
5700 Cfm	EA (wb)	58	THC	132.3	132.3	151.0	127.3	127.3	145.8	122.0	122.0	140.3	116.1	116.1	134.1	109.5	109.5	127.2
			SHC	113.6	132.3	151.0	108.8	127.3	145.8	103.7	122.0	140.3	98.1	116.1	134.1	91.8	109.5	127.2
		62	THC	132.4	132.4	151.1	127.4	127.4	145.9	122.1	122.1	140.3	116.2	116.2	134.2	109.5	109.5	127.3
			SHC	113.7	132.4	151.1	108.9	127.4	145.9	103.8	122.1	140.3	98.1	116.2	134.2	91.8	109.5	127.3
		67	THC	136.0	136.0	141.8	130.2	130.2	137.7	124.1	124.1	134.2	117.4	117.4	130.6	110.3	110.3	125.5
			SHC	103.2	121.5	139.8	100.8	119.0	137.2	98.1	116.1	134.2	94.9	112.7	130.6	90.2	107.8	125.5
		72	THC	144.7	144.7	144.7	138.8	138.8	138.8	132.0	132.0	140.6	126.0	126.0	133.0	–	–	–
			SHC	74.8	92.0	109.1	72.8	89.9	107.0	71.4	88.0	81.8	68.7	85.2	101.8	–	–	–
		76	THC	–	–	–	–	–	–	–	–	–	–	–	–	–	–	–
			SHC	–	–	–	–	–	–	–	–	–	–	–	–	–	–	–
6250 Cfm	EA (wb)	58	THC	134.9	134.9	155.1	129.8	129.8	149.8	124.4	124.4	144.2	118.3	118.3	137.8	111.6	111.6	130.8
			SHC	114.7	134.9	155.1	109.9	129.8	149.8	104.7	124.4	144.2	98.9	118.3	137.8	92.5	111.6	130.8
		62	THC	135.0	135.0	155.2	129.9	129.9	149.9	124.5	124.5	144.2	118.4	118.4	137.9	111.7	111.7	130.9
			SHC	114.8	135.0	155.2	109.9	129.9	149.9	104.7	124.5	144.2	98.9	118.4	137.9	92.5	111.7	130.9
		67	THC	137.2	137.2	147.6	131.4	131.4	144.9	125.3	125.3	141.6	118.7	118.7	137.5	111.8	111.8	131.0
			SHC	107.8	127.7	147.6	105.3	125.1	144.9	102.4	122.0	141.6	98.6	118.1	137.5	92.7	111.8	131.0
		72	THC	145.7	145.7	145.7	139.9	139.9	139.9	–	–	–	–	–	–	–	–	–
			SHC	77.3	96.0	114.7	75.4	94.0	112.6	–	–	–	–	–	–	–	–	–
		76	THC	–	–	–	–	–	–	–	–	–	–	–	–	–	–	–
			SHC	–	–	–	–	–	–	–	–	–	–	–	–	–	–	–

– Not operational
THC – Total Cooling Capacity, Gross (1,000 Btuh)
SHC – Sensible Cooling Capacity, Gross (1,000 Btuh)

38AUD12 - 40RUA12 **COMBINATION RATINGS**

				AMBIENT TEMPERATURE														
				85			95			105			115			125		
				EA (db)			EA (db)			EA (db)			EA (db)			EA (db)		
				75	80	85	75	80	85	75	80	85	75	80	85	75	80	85
3000 Cfm	EA (wb)	58	THC	111.6	111.6	125.3	107.3	107.3	120.5	102.6	102.6	115.2	97.3	97.3	109.4	91.7	91.7	103.0
			SHC	97.9	111.6	125.3	94.1	107.3	120.5	89.9	102.6	115.2	85.3	97.3	109.4	80.3	91.7	103.0
		62	THC	115.9	115.9	119.8	110.5	110.5	117.1	104.8	104.8	114.2	98.3	98.3	110.7	92.4	92.4	106.2
			SHC	88.6	104.2	119.8	86.0	101.5	117.1	83.2	98.7	114.2	79.9	95.3	110.7	76.2	91.2	106.2
		67	THC	125.6	125.6	125.6	119.9	119.9	119.9	113.7	113.7	113.7	107.1	107.1	107.1	99.6	99.6	99.6
			SHC	71.9	87.6	103.3	69.4	85.1	100.8	66.8	82.5	98.1	63.9	79.6	95.3	60.8	76.5	92.2
		72	THC	135.6	135.6	135.6	129.6	129.6	129.6	123.1	123.1	123.1	116.1	116.1	116.1	108.4	108.4	108.4
			SHC	55.0	70.8	86.6	52.6	68.4	84.2	50.1	65.9	81.7	47.4	63.2	79.0	44.5	60.3	76.1
		76	THC	–	143.6	143.6	–	137.4	137.4	–	130.7	130.7	–	123.3	123.3	–	115.2	115.2
			SHC	–	57.3	73.6	–	55.1	71.4	–	52.7	68.9	–	50.1	66.2	–	47.4	63.4
3500 Cfm	EA (wb)	58	THC	117.1	117.1	131.6	112.5	112.5	126.4	107.5	107.5	120.8	102.0	102.0	114.7	95.7	95.7	107.7
			SHC	102.6	117.1	131.6	98.6	112.5	126.4	94.2	107.5	120.8	89.4	102.0	114.7	83.8	95.7	107.7
		62	THC	119.3	119.3	130.8	113.8	113.8	127.8	108.1	108.1	123.7	102.1	102.1	119.1	95.7	95.7	111.7
			SHC	95.1	112.9	130.8	92.3	110.0	127.8	88.9	106.3	123.7	85.1	102.1	119.1	79.7	95.7	111.7
		67	THC	128.8	128.8	128.8	122.8	122.8	122.8	116.4	116.4	116.4	109.5	109.5	109.5	101.9	101.9	101.9
			SHC	76.0	94.1	112.2	73.5	91.6	109.7	70.8	88.9	107.0	68.0	86.1	104.2	64.9	82.9	101.0
		72	THC	138.6	138.6	138.6	132.5	132.5	132.5	125.8	125.8	125.8	118.4	118.4	118.4	110.5	110.5	110.5
			SHC	56.5	74.8	93.0	54.2	72.4	90.6	51.7	69.9	88.1	48.9	67.1	85.3	46.0	64.2	82.4
		76	THC	–	146.6	146.6	–	140.2	140.2	–	133.2	133.2	–	125.6	125.6	–	–	–
			SHC	–	59.4	78.0	–	57.1	75.7	–	54.7	73.3	–	52.2	70.6	–	–	–
4000 Cfm	EA (wb)	58	THC	121.6	121.6	136.6	116.7	116.7	131.2	111.4	111.4	125.3	105.7	105.7	118.9	99.2	99.2	111.7
			SHC	106.5	121.6	136.6	102.2	116.7	131.2	97.6	111.4	125.3	92.5	105.7	118.9	86.8	99.2	111.7
		62	THC	122.2	122.2	140.3	117.0	117.0	135.6	111.4	111.4	130.0	105.7	105.7	123.4	99.2	99.2	115.9
			SHC	100.7	120.5	140.3	97.0	116.3	135.6	92.8	111.4	130.0	88.0	105.7	123.4	82.6	99.2	115.9
		67	THC	131.1	131.1	131.1	125.0	125.0	125.0	118.5	118.5	118.5	111.4	111.4	112.6	103.7	103.7	109.4
			SHC	79.9	100.4	120.8	77.4	97.8	118.3	74.7	95.1	115.6	71.8	92.2	112.6	68.7	89.0	109.4
		72	THC	140.9	140.9	140.9	134.6	134.6	134.6	127.7	127.7	127.7	120.3	120.3	120.3	112.1	112.1	112.1
			SHC	57.9	78.6	99.2	55.6	76.2	96.8	53.1	73.7	94.2	50.4	70.9	91.5	47.5	68.0	88.5
		76	THC	–	148.8	148.8	–	142.3	142.3	–	135.2	135.2	–	–	–	–	–	–
			SHC	–	61.3	82.2	–	59.1	80.0	–	56.7	77.5	–	–	–	–	–	–
4500 Cfm	EA (wb)	58	THC	125.3	125.3	140.9	120.2	120.2	135.3	114.8	114.8	129.1	108.8	108.8	122.4	102.4	102.4	115.2
			SHC	109.7	125.3	140.9	105.2	120.2	135.3	100.4	114.8	129.1	95.2	108.8	122.4	89.5	102.4	115.2
		62	THC	125.3	125.3	146.2	120.2	120.2	140.3	114.7	114.7	134.0	108.8	108.8	127.1	102.4	102.4	119.6
			SHC	104.4	125.3	146.2	100.1	120.2	140.3	95.5	114.7	134.0	90.5	108.8	127.1	85.1	102.4	119.6
		67	THC	133.0	133.0	133.0	126.8	126.8	126.8	120.1	120.1	123.8	112.9	112.9	120.7	105.1	105.1	117.3
			SHC	83.6	106.4	129.2	81.1	103.8	126.6	78.3	101.0	123.8	75.4	98.0	120.7	72.2	94.8	117.3
		72	THC	142.8	142.8	142.8	136.3	136.3	136.3	129.3	129.3	129.3	121.7	121.7	121.7	113.3	113.3	113.3
			SHC	59.3	82.2	105.1	57.0	79.9	102.8	54.4	77.3	100.2	51.7	74.6	97.5	48.8	71.6	94.5
		76	THC	–	150.5	150.5	–	143.9	143.9	–	–	–	–	–	–	–	–	–
			SHC	–	63.1	86.4	–	60.9	84.1	–	–	–	–	–	–	–	–	–
5000 Cfm	EA (wb)	58	THC	128.4	128.4	144.5	123.2	123.2	138.7	117.6	117.6	132.3	111.4	111.4	125.4	104.7	104.7	117.9
			SHC	112.4	128.4	144.5	107.8	123.2	138.7	102.8	117.6	132.3	97.4	111.4	125.4	91.5	104.7	117.9
		62	THC	128.4	128.4	149.9	123.2	123.2	143.9	117.5	117.5	137.3	111.4	111.4	130.2	104.7	104.7	122.4
			SHC	106.9	128.4	149.9	102.5	123.2	143.9	97.8	117.5	137.3	92.6	111.4	130.2	87.0	104.7	122.4
		67	THC	134.6	134.6	137.2	128.3	128.3	134.5	121.5	121.5	131.6	114.2	114.2	128.3	106.3	106.3	124.6
			SHC	87.1	112.2	137.2	84.6	109.5	134.5	81.8	106.7	131.6	78.8	103.6	128.3	75.5	100.1	124.6
		72	THC	144.2	144.2	144.2	137.7	137.7	137.7	130.6	130.6	130.6	122.8	122.8	122.8	114.4	114.4	114.4
			SHC	60.6	85.8	111.0	58.3	83.5	108.6	55.8	80.9	106.1	53.0	78.2	103.3	50.1	75.2	100.3
		76	THC	–	151.9	151.9	–	–	–	–	–	–	–	–	–	–	–	–
			SHC	–	64.9	90.4	–	–	–	–	–	–	–	–	–	–	–	–

– Not operational
THC – Total Cooling Capacity, Gross (1,000 Btuh)
SHC – Sensible Cooling Capacity, Gross (1,000 Btuh)

38AU

PERFORMANCE DATA (cont.)

38AUD12 - 40RUA14 COMBINATION RATINGS

				AMBIENT TEMPERATURE														
				85			95			105			115			125		
				EA (db)			EA (db)			EA (db)			EA (db)			EA (db)		
				75	80	85	75	80	85	75	80	85	75	80	85	75	80	85
3750 Cfm	EA (wb)	58	THC	118.1	118.1	133.1	113.8	113.8	128.3	109.1	109.1	123.0	103.9	103.9	117.1	98.2	98.2	110.7
			SHC	103.1	118.1	133.1	99.4	113.8	128.3	95.3	109.1	123.0	90.7	103.9	117.1	85.8	98.2	110.7
		62	THC	120.1	120.1	133.8	115.0	115.0	130.9	109.5	109.5	127.1	104.1	104.1	121.7	98.3	98.3	115.0
			SHC	96.2	115.0	133.8	93.6	112.3	130.9	90.5	108.8	127.1	86.4	104.1	121.7	81.7	98.3	115.0
		67	THC	130.2	130.2	130.2	124.8	124.8	124.8	118.7	118.7	118.7	112.0	112.0	112.0	104.6	104.6	105.5
			SHC	77.7	96.9	116.0	75.5	94.6	113.8	73.0	92.2	111.3	70.4	89.5	108.6	67.4	86.4	105.5
		72	THC	140.9	140.9	140.9	135.4	135.4	135.4	129.2	129.2	129.2	122.3	122.3	122.3	114.6	114.6	114.6
			SHC	58.0	77.3	96.6	56.0	75.3	94.5	53.7	73.0	92.2	51.2	70.4	89.7	48.4	67.6	86.8
		76	THC	–	149.8	149.8	–	144.2	144.2	–	137.8	137.8	–	130.6	130.6	–	122.6	122.6
			SHC	–	61.4	81.1	–	59.4	79.1	–	57.3	76.9	–	54.9	74.5	–	52.2	71.7
4300 Cfm	EA (wb)	58	THC	122.7	122.7	138.2	118.2	118.2	133.2	113.3	113.3	127.7	107.9	107.9	121.5	101.8	101.8	114.7
			SHC	107.1	122.7	138.2	103.3	118.2	133.2	98.9	113.3	127.7	94.1	107.9	121.5	88.9	101.8	114.7
		62	THC	123.2	123.2	142.6	118.4	118.4	138.1	113.4	113.4	132.5	108.0	108.0	126.2	101.9	101.9	119.1
			SHC	101.5	122.0	142.6	98.2	118.1	138.1	94.1	113.3	132.5	89.7	108.0	126.2	84.6	101.9	119.1
		67	THC	132.3	132.3	132.3	126.8	126.8	126.8	120.6	120.6	121.3	113.8	113.8	118.1	106.3	106.3	114.4
			SHC	81.8	103.6	125.2	79.6	101.3	123.0	77.1	98.8	120.5	74.4	96.0	117.7	71.4	92.9	114.4
		72	THC	143.1	143.1	143.1	137.4	137.4	137.4	131.0	131.0	131.0	124.0	124.0	124.0	116.1	116.1	116.1
			SHC	59.7	81.4	103.3	57.7	79.4	101.2	55.4	77.1	98.9	52.9	74.6	96.3	50.1	71.8	93.5
		76	THC	–	–	–	–	–	–	–	–	–	–	–	–	–	–	–
			SHC	–	–	–	–	–	–	–	–	–	–	–	–	–	–	–
5000 Cfm	EA (wb)	58	THC	127.4	127.4	143.6	122.8	122.8	138.4	117.7	117.7	132.6	111.9	111.9	126.1	105.5	105.5	118.9
			SHC	111.3	127.4	143.6	107.2	122.8	138.4	102.7	117.7	132.6	97.7	111.9	126.1	92.1	105.5	118.9
		62	THC	127.5	127.5	149.1	122.9	122.9	143.7	117.7	117.7	137.7	112.0	112.0	131.0	105.6	105.6	123.5
			SHC	105.9	127.5	149.1	102.1	122.9	143.7	97.8	117.7	137.7	93.0	112.0	131.0	87.7	105.6	123.5
		67	THC	134.4	134.4	136.4	128.9	128.9	134.1	122.6	122.6	131.4	115.7	115.7	128.4	108.0	108.0	124.8
			SHC	86.9	111.7	136.4	84.7	109.4	134.1	82.2	106.8	131.4	79.3	103.8	128.4	76.2	100.5	124.8
		72	THC	145.1	145.1	145.1	139.4	139.4	139.4	132.9	132.9	132.9	125.7	125.7	125.7	117.6	117.6	117.6
			SHC	61.7	86.6	111.5	59.6	84.6	109.5	57.4	82.3	107.2	54.8	79.7	104.6	52.1	76.9	101.7
		76	THC	–	–	–	–	–	–	–	–	–	–	–	–	–	–	–
			SHC	–	–	–	–	–	–	–	–	–	–	–	–	–	–	–
5700 Cfm	EA (wb)	58	THC	131.2	131.2	147.9	126.4	126.4	142.4	121.1	121.1	136.4	115.1	115.1	129.8	108.5	108.5	122.4
			SHC	114.5	131.2	147.9	110.3	126.4	142.4	105.7	121.1	136.4	100.5	115.1	129.8	94.8	108.5	122.4
		62	THC	131.3	131.3	153.5	126.5	126.5	148.0	121.2	121.2	141.7	115.2	115.2	134.7	108.6	108.6	127.1
			SHC	109.0	131.3	153.5	105.1	126.5	148.0	100.6	121.2	141.7	95.7	115.2	134.7	90.3	108.6	127.1
		67	THC	136.1	136.1	146.9	130.5	130.5	144.4	124.2	124.2	141.6	117.2	117.2	138.0	109.6	109.6	133.8
			SHC	91.6	119.3	146.9	89.3	116.9	144.4	86.7	114.2	141.6	83.8	111.0	138.0	80.2	107.0	133.8
		72	THC	146.6	146.6	146.6	140.9	140.9	140.9	134.2	134.2	134.2	126.9	126.9	126.9	118.7	118.7	118.7
			SHC	63.5	91.5	119.6	61.5	89.5	117.5	59.3	87.2	115.2	56.7	84.6	112.6	54.0	81.8	109.7
		76	THC	–	–	–	–	–	–	–	–	–	–	–	–	–	–	–
			SHC	–	–	–	–	–	–	–	–	–	–	–	–	–	–	–
6250 Cfm	EA (wb)	58	THC	133.5	133.5	150.5	128.7	128.7	145.0	123.3	123.3	138.9	117.2	117.2	132.1	110.5	110.5	124.5
			SHC	116.6	133.5	150.5	112.4	128.7	145.0	107.6	123.3	138.9	102.3	117.2	132.1	96.4	110.5	124.5
		62	THC	133.6	133.6	156.3	128.8	128.8	150.6	123.3	123.3	144.2	117.3	117.3	137.1	110.5	110.5	129.2
			SHC	111.0	133.6	156.3	107.0	128.8	150.6	102.5	123.3	144.2	97.4	117.3	137.1	91.8	110.5	129.2
		67	THC	137.1	137.1	154.6	131.5	131.5	151.9	125.1	125.1	148.6	118.2	118.2	144.5	110.8	110.8	138.2
			SHC	95.1	124.8	154.6	92.7	122.3	151.9	89.9	119.3	148.6	86.7	115.6	144.5	82.4	110.3	138.2
		72	THC	147.5	147.5	147.5	141.7	141.7	141.7	135.0	135.0	135.0	127.6	127.6	127.6	119.4	119.4	119.4
			SHC	65.0	95.3	125.6	63.0	93.3	123.6	60.7	91.0	121.2	58.2	88.4	118.6	55.4	85.6	115.8
		76	THC	–	–	–	–	–	–	–	–	–	–	–	–	–	–	–
			SHC	–	–	–	–	–	–	–	–	–	–	–	–	–	–	–

– Not operational
THC – Total Cooling Capacity, Gross (1,000 Btuh)
SHC – Sensible Cooling Capacity, Gross (1,000 Btuh)

38AUZ14 - 40RUA14 COMBINATION RATINGS

				AMBIENT TEMPERATURE														
				85			95			105			115			125		
				EA (db)			EA (db)			EA (db)			EA (db)			EA (db)		
				75	80	85	75	80	85	75	80	85	75	80	85	75	80	85
3750 Cfm	EA (wb)	58	THC	138.4	138.4	152.4	133.2	133.2	147.0	127.6	127.6	141.2	121.6	121.6	135.0	113.3	113.3	126.5
			SHC	124.5	138.4	152.4	119.4	133.2	147.0	114.0	127.6	141.2	108.2	121.6	135.0	100.2	113.3	126.5
		62	THC	144.5	144.5	144.5	137.9	137.9	138.9	131.0	131.0	135.4	123.7	123.7	131.6	–	–	–
			SHC	114.9	128.6	142.3	111.8	125.4	138.9	108.6	122.0	135.4	105.0	118.3	131.6	–	–	–
		67	THC	156.4	156.4	156.4	149.4	149.4	149.4	141.9	141.9	141.9	134.0	134.0	134.0	125.3	125.3	125.3
			SHC	95.6	108.7	121.7	92.7	105.7	118.6	89.7	102.5	115.3	86.5	99.2	111.9	83.1	95.7	108.2
		72	THC	168.6	168.6	168.6	161.2	161.2	161.2	153.4	153.4	153.4	144.8	144.8	144.8	135.6	135.6	135.6
			SHC	75.7	88.1	100.4	73.0	85.2	97.5	70.1	82.2	94.3	67.0	79.0	91.0	63.8	75.6	87.4
		76	THC	–	178.5	178.5	–	170.8	170.8	–	162.6	162.6	–	153.6	153.6	–	143.9	143.9
			SHC	–	71.4	83.2	–	68.7	80.3	–	65.8	77.3	–	62.7	74.0	–	59.4	70.6
4375 Cfm	EA (wb)	58	THC	145.4	145.4	161.2	139.7	139.7	155.4	133.7	133.7	149.2	127.3	127.3	142.6	121.3	121.3	136.3
			SHC	129.5	145.4	161.2	124.0	139.7	155.4	118.3	133.7	149.2	112.1	127.3	142.6	106.3	121.3	136.3
		62	THC	148.6	148.6	155.2	141.9	141.9	151.6	134.8	134.8	147.6	127.5	127.5	142.8	121.2	121.2	136.1
			SHC	123.8	139.5	155.2	120.5	136.0	151.6	116.8	132.2	147.6	112.3	127.5	142.8	106.1	121.1	136.1
		67	THC	160.2	160.2	160.2	152.9	152.9	152.9	145.2	145.2	145.2	136.9	136.9	136.9	127.9	127.9	127.9
			SHC	101.9	116.9	131.8	99.0	113.8	128.7	96.0	110.7	125.4	92.8	107.3	121.9	89.3	103.7	118.1
		72	THC	172.3	172.3	172.3	164.7	164.7	164.7	156.5	156.5	156.5	147.7	147.7	147.7	138.1	138.1	138.1
			SHC	79.0	93.2	107.3	76.3	90.3	104.3	73.4	87.3	101.1	70.3	84.0	97.8	67.0	80.6	94.2
		76	THC	–	182.1	182.1	–	174.2	174.2	–	165.6	165.6	–	156.4	156.4	–	146.3	146.3
			SHC	–	74.0	87.5	–	71.3	84.6	–	68.4	81.5	–	65.3	78.3	–	61.9	74.8
5000 Cfm	EA (wb)	58	THC	151.0	151.0	168.8	145.0	145.0	162.6	138.7	138.7	156.0	131.9	131.9	149.0	124.6	124.6	141.4
			SHC	133.2	151.0	168.8	127.5	145.0	162.6	121.4	138.7	156.0	114.9	131.9	149.0	107.9	124.6	141.4
		62	THC	152.2	152.2	166.8	145.3	145.3	162.8	138.9	138.9	156.2	132.0	132.0	149.1	124.7	124.7	141.5
			SHC	131.5	149.1	166.8	127.8	145.3	162.8	121.5	138.9	156.2	115.0	132.0	149.1	107.9	124.7	141.5
		67	THC	163.1	163.1	163.1	155.6	155.6	155.6	147.6	147.6	147.6	139.1	139.1	139.1	130.1	130.1	130.1
			SHC	107.9	124.8	141.6	105.0	121.7	138.5	101.9	118.5	135.1	98.6	115.1	131.5	95.1	111.4	127.7
		72	THC	175.0	175.0	175.0	167.3	167.3	167.3	158.8	158.8	158.8	149.8	149.8	149.8	140.0	140.0	140.0
			SHC	82.1	98.0	113.9	79.4	95.2	111.0	76.5	92.1	107.8	73.4	88.9	104.4	70.1	85.4	100.7
		76	THC	–	184.8	184.8	–	176.6	176.6	–	167.9	167.9	–	158.4	158.4	–	–	–
			SHC	–	76.5	91.6	–	73.8	88.8	–	70.8	85.7	–	67.7	82.4	–	–	–
5625 Cfm	EA (wb)	58	THC	155.6	155.6	175.2	149.4	149.4	168.8	142.8	142.8	161.9	135.7	135.7	154.5	127.9	127.9	146.4
			SHC	136.0	155.6	175.2	130.0	149.4	168.8	123.7	142.8	161.9	116.8	135.7	154.5	109.4	127.9	146.4
		62	THC	155.7	155.7	175.3	149.5	149.5	168.8	142.9	142.9	162.0	135.8	135.8	154.6	128.0	128.0	146.5
			SHC	136.1	155.7	175.3	130.1	149.5	168.8	123.8	142.9	162.0	117.0	135.8	154.6	109.5	128.0	146.5
		67	THC	165.3	165.3	165.3	157.8	157.8	157.8	149.6	149.6	149.6	140.9	140.9	140.9	131.7	131.7	136.8
			SHC	113.6	132.4	151.2	110.7	129.3	148.0	107.5	126.0	144.5	104.1	122.5	140.8	100.5	118.6	136.8
		72	THC	177.3	177.3	177.3	169.3	169.3	169.3	160.7	160.7	160.7	151.5	151.5	151.5	141.6	141.6	141.6
			SHC	85.0	102.7	120.5	82.3	99.9	117.4	79.4	96.8	114.2	76.3	93.6	110.8	73.0	90.1	107.2
		76	THC	–	187.0	187.0	–	178.7	178.7	–	169.7	169.7	–	–	–	–	–	–
			SHC	–	78.9	95.7	–	76.2	92.8	–	73.2	89.8	–	–	–	–	–	–
6250 Cfm	EA (wb)	58	THC	159.5	159.5	180.9	153.1	153.1	174.3	146.2	146.2	167.1	138.9	138.9	159.5	131.0	131.0	151.2
			SHC	138.0	159.5	180.9	131.9	153.1	174.3	125.3	146.2	167.1	118.3	138.9	159.5	110.7	131.0	151.2
		62	THC	159.6	159.6	181.0	153.2	153.2	174.4	146.3	146.3	167.2	139.0	139.0	159.5	131.0	131.0	151.2
			SHC	138.2	159.6	181.0	132.0	153.2	174.4	125.5	146.3	167.2	118.4	139.0	159.5	110.7	131.0	151.2
		67	THC	167.2	167.2	167.2	159.5	159.5	159.5	151.2	151.2	153.5	142.5	142.5	149.6	133.1	133.1	145.3
			SHC	119.0	139.7	160.4	116.0	136.6	157.1	112.8	133.1	153.5	109.2	129.4	149.6	105.3	125.3	145.3
		72	THC	179.0	179.0	179.0	170.9	170.9	170.9	162.2	162.2	162.2	152.8	152.8	152.8	142.6	142.6	142.6
			SHC	87.9	107.4	126.8	85.1	104.5	123.8	82.2	101.4	120.6	79.1	98.2	117.2	75.9	94.7	113.5
		76	THC	–	188.7	188.7	–	180.2	180.2	–	–	–	–	–	–	–	–	–
			SHC	–	81.3	99.8	–	78.5	96.9	–	–	–	–	–	–	–	–	–

– Not operational
THC – Total Cooling Capacity, Gross (1,000 Btuh)
SHC – Sensible Cooling Capacity, Gross (1,000 Btuh)

38AU

PERFORMANCE DATA (cont.)

38AUZ14 - 40RUA16 COMBINATION RATINGS

				AMBIENT TEMPERATURE														
				85			95			105			115			125		
				EA (db)			EA (db)			EA (db)			EA (db)			EA (db)		
				75	80	85	75	80	85	75	80	85	75	80	85	75	80	85
4500 Cfm	EA (wb)	58	THC	149.9	149.9	166.0	144.0	144.0	160.0	137.7	137.7	153.4	130.8	130.8	146.3	122.9	122.9	138.1
			SHC	133.8	149.9	166.0	128.1	144.0	160.0	122.0	137.7	153.4	115.3	130.8	146.3	107.8	122.9	138.1
		62	THC	152.8	152.8	160.5	145.8	145.8	156.7	138.6	138.6	152.1	131.1	131.1	146.5	122.0	122.0	137.1
			SHC	128.7	144.6	160.5	125.2	141.0	156.7	120.8	136.5	152.1	115.6	131.1	146.5	106.8	122.0	137.1
		67	THC	164.6	164.6	164.6	157.1	157.1	157.1	149.0	149.0	149.0	140.3	140.3	140.3	–	–	–
			SHC	105.8	120.9	136.1	102.8	117.8	132.9	99.7	114.5	129.5	96.2	111.0	125.8	–	–	–
		72	THC	176.9	176.9	176.9	169.1	169.1	169.1	160.6	160.6	160.6	151.4	151.4	151.4	–	–	–
			SHC	81.9	96.2	110.5	79.1	93.3	107.5	76.1	90.1	104.2	72.9	86.7	100.7	–	–	–
		76	THC	–	187.1	187.1	–	179.0	179.0	–	169.7	169.7	–	–	–	–	–	–
			SHC	–	76.2	89.7	–	73.4	86.9	–	69.9	82.9	–	–	–	–	–	–
5300 Cfm	EA (wb)	58	THC	156.6	156.6	175.0	150.4	150.4	168.6	143.7	143.7	161.7	136.4	136.4	154.1	124.7	124.7	141.2
			SHC	138.2	156.6	175.0	132.2	150.4	168.6	125.8	143.7	161.7	118.8	136.4	154.1	108.2	124.7	141.2
		62	THC	157.6	157.6	173.5	150.7	150.7	168.8	143.8	143.8	161.7	136.5	136.5	154.2	125.1	125.1	141.6
			SHC	136.9	155.2	173.5	132.5	150.7	168.8	125.9	143.8	161.7	118.9	136.5	154.2	108.6	125.1	141.6
		67	THC	167.9	167.9	167.9	160.2	160.2	160.2	151.8	151.8	152.2	142.9	142.9	144.4	–	–	–
			SHC	113.4	131.0	148.5	110.5	127.9	145.3	107.3	124.5	141.7	103.8	120.9	138.0	–	–	–
		72	THC	180.2	180.2	180.2	172.1	172.1	172.1	163.4	163.4	163.4	153.9	153.9	153.9	–	–	–
			SHC	85.9	102.4	118.8	83.1	99.5	115.8	80.1	96.3	112.5	76.9	92.9	109.0	–	–	–
		76	THC	–	189.4	189.4	–	181.2	181.2	–	–	–	–	–	–	–	–	–
			SHC	–	78.2	93.1	–	75.5	90.3	–	–	–	–	–	–	–	–	–
6000 Cfm	EA (wb)	58	THC	161.3	161.3	181.5	154.9	154.9	174.9	147.8	147.8	167.6	140.3	140.3	159.7	–	–	–
			SHC	141.1	161.3	181.5	134.9	154.9	174.9	128.1	147.8	167.6	120.9	140.3	159.7	–	–	–
		62	THC	161.7	161.7	181.1	155.0	155.0	175.0	148.0	148.0	167.7	140.4	140.4	159.8	–	–	–
			SHC	140.7	160.9	181.1	135.0	155.0	175.0	128.2	148.0	167.7	121.0	140.4	159.8	–	–	–
		67	THC	170.1	170.1	170.1	162.3	162.3	162.3	153.8	153.8	155.1	144.7	144.7	149.9	–	–	–
			SHC	119.6	139.1	158.6	116.6	136.0	155.3	113.3	132.5	151.6	109.7	128.7	147.7	–	–	–
		72	THC	182.3	182.3	182.3	174.1	174.1	174.1	165.2	165.2	165.2	155.4	155.4	155.4	–	–	–
			SHC	89.1	107.4	125.7	86.3	104.5	122.7	83.3	101.3	119.4	80.1	97.9	115.8	–	–	–
		76	THC	–	–	–	–	–	–	–	–	–	–	–	–	–	–	–
			SHC	–	–	–	–	–	–	–	–	–	–	–	–	–	–	–
6800 Cfm	EA (wb)	58	THC	166.2	166.2	188.7	159.5	159.5	181.8	152.2	152.2	174.2	144.3	144.3	165.9	–	–	–
			SHC	143.6	166.2	188.7	137.2	159.5	181.8	130.2	152.2	174.2	122.6	144.3	165.9	–	–	–
		62	THC	166.3	166.3	188.8	159.6	159.6	181.9	152.3	152.3	174.3	144.4	144.4	166.0	–	–	–
			SHC	143.8	166.3	188.8	137.4	159.6	181.9	130.3	152.3	174.3	122.7	144.4	166.0	–	–	–
		67	THC	172.4	172.4	175.3	164.5	164.5	169.2	155.9	155.9	163.4	146.7	146.7	159.1	–	–	–
			SHC	126.9	148.8	170.7	123.8	145.5	167.3	120.3	141.9	163.4	116.3	137.6	159.1	–	–	–
		72	THC	184.4	184.4	184.4	176.1	176.1	176.1	167.0	167.0	167.0	157.1	157.1	157.1	–	–	–
			SHC	93.0	113.5	134.1	90.2	110.6	131.1	87.2	107.5	127.8	84.0	104.1	124.2	–	–	–
		76	THC	–	–	–	–	–	–	–	–	–	–	–	–	–	–	–
			SHC	–	–	–	–	–	–	–	–	–	–	–	–	–	–	–
7500 Cfm	EA (wb)	58	THC	170.1	170.1	194.7	163.2	163.2	187.6	155.7	155.7	179.7	147.5	147.5	171.2	–	–	–
			SHC	145.4	170.1	194.7	138.8	163.2	187.6	131.6	155.7	179.7	123.8	147.5	171.2	–	–	–
		62	THC	170.2	170.2	194.8	163.3	163.3	187.7	155.8	155.8	179.8	147.6	147.6	171.3	–	–	–
			SHC	145.6	170.2	194.8	139.0	163.3	187.7	131.7	155.8	179.8	123.9	147.6	171.3	–	–	–
		67	THC	174.3	174.3	181.8	166.3	166.3	178.1	157.7	157.7	174.0	148.4	148.4	169.1	–	–	–
			SHC	133.4	157.6	181.8	130.1	154.1	178.1	126.4	150.2	174.0	122.0	145.5	169.1	–	–	–
		72	THC	186.0	186.0	186.0	177.6	177.6	177.6	168.4	168.4	168.4	158.4	158.4	158.4	–	–	–
			SHC	96.5	119.2	141.9	93.8	116.3	138.9	90.8	113.2	135.6	87.6	109.8	132.0	–	–	–
		76	THC	–	–	–	–	–	–	–	–	–	–	–	–	–	–	–
			SHC	–	–	–	–	–	–	–	–	–	–	–	–	–	–	–

– Not operational
THC – Total Cooling Capacity, Gross (1,000 Btuh)
SHC – Sensible Cooling Capacity, Gross (1,000 Btuh)

38AUD14 - 40RUA14 **COMBINATION RATINGS**

				AMBIENT TEMPERATURE														
				85			95			105			115			125		
				EA (db)			EA (db)			EA (db)			EA (db)			EA (db)		
				75	80	85	75	80	85	75	80	85	75	80	85	75	80	85
3750 Cfm	EA (wb)	58	THC	137.2	137.2	152.7	132.4	132.4	147.9	127.1	127.1	142.6	121.2	121.2	136.7	114.7	114.7	130.2
			SHC	121.7	137.2	152.7	117.0	132.4	147.9	111.6	127.1	142.6	105.8	121.2	136.7	99.3	114.7	130.2
		62	THC	143.2	143.2	143.2	137.3	137.3	140.1	130.6	130.6	136.8	123.3	123.3	133.1	115.5	115.5	128.8
			SHC	112.0	127.5	142.9	109.1	124.6	140.1	105.9	121.3	136.8	102.2	117.7	133.1	97.9	113.3	128.8
		67	THC	154.9	154.9	154.9	148.6	148.6	148.6	141.6	141.6	141.6	133.9	133.9	133.9	125.4	125.4	125.4
			SHC	91.1	106.5	122.0	88.4	103.9	119.4	85.5	101.0	116.5	82.3	97.8	113.3	78.9	94.3	109.8
		72	THC	166.4	166.4	166.4	160.0	160.0	160.0	152.9	152.9	152.9	144.8	144.8	144.8	135.8	135.8	135.8
			SHC	69.8	85.3	100.7	67.4	82.9	98.4	64.8	80.3	95.7	61.8	77.3	92.8	58.6	74.0	89.5
		76	THC	–	175.4	175.4	–	169.0	169.0	–	161.5	161.5	–	153.2	153.2	–	–	–
			SHC	–	67.2	82.7	–	65.5	81.0	–	63.3	78.8	–	60.7	76.2	–	–	–
4375 Cfm	EA (wb)	58	THC	143.6	143.6	161.7	138.6	138.6	156.7	133.0	133.0	151.0	126.7	126.7	144.8	119.9	119.9	137.9
			SHC	125.6	143.6	161.7	120.6	138.6	156.7	114.9	133.0	151.0	108.7	126.7	144.8	101.8	119.9	137.9
		62	THC	147.0	147.0	155.9	140.8	140.8	152.8	134.1	134.1	149.0	127.7	127.7	141.1	120.7	120.7	134.7
			SHC	119.8	137.9	155.9	116.7	134.7	152.8	112.9	130.9	149.0	105.0	123.1	141.1	98.6	116.6	134.7
		67	THC	158.8	158.8	158.8	152.3	152.3	152.3	145.0	145.0	145.0	137.0	137.0	137.0	128.1	128.1	128.1
			SHC	96.4	114.4	132.5	93.7	111.8	129.8	90.8	108.9	126.9	87.6	105.6	123.7	84.1	102.1	120.2
		72	THC	170.6	170.6	170.6	163.9	163.9	163.9	156.3	156.3	156.3	147.8	147.8	147.8	138.6	138.6	138.6
			SHC	72.3	90.3	108.4	69.8	87.9	105.9	67.1	85.1	103.2	64.1	82.1	100.2	60.8	78.8	96.9
		76	THC	–	179.7	179.7	–	172.7	172.7	–	165.0	165.0	–	–	–	–	–	–
			SHC	–	70.7	88.7	–	68.5	86.6	–	66.1	84.1	–	–	–	–	–	–
5000 Cfm	EA (wb)	58	THC	148.9	148.9	169.6	143.7	143.7	164.3	137.8	137.8	158.4	131.3	131.3	151.9	124.0	124.0	144.7
			SHC	128.3	148.9	169.6	123.1	143.7	164.3	117.2	137.8	158.4	110.6	131.3	151.9	103.4	124.0	144.7
		62	THC	149.9	149.9	167.0	144.2	144.2	160.8	138.6	138.6	154.4	131.8	131.8	149.5	124.0	124.0	144.7
			SHC	125.8	146.4	167.0	119.6	140.2	160.8	113.1	133.8	154.4	108.3	128.9	149.5	103.4	124.0	144.7
		67	THC	161.8	161.8	161.8	155.1	155.1	155.1	147.6	147.6	147.6	139.3	139.3	139.3	130.2	130.2	130.2
			SHC	101.4	122.0	142.6	98.7	119.3	139.9	95.7	116.3	137.0	92.4	113.0	133.7	88.8	109.5	130.1
		72	THC	173.7	173.7	173.7	166.7	166.7	166.7	158.9	158.9	158.9	150.2	150.2	150.2	140.7	140.7	140.7
			SHC	74.4	95.0	115.7	71.9	92.5	113.2	69.2	89.8	110.4	66.1	86.7	107.4	62.8	83.4	104.1
		76	THC	–	183.0	183.0	–	175.8	175.8	–	–	–	–	–	–	–	–	–
			SHC	–	73.4	94.1	–	71.2	91.8	–	–	–	–	–	–	–	–	–
5625 Cfm	EA (wb)	58	THC	153.5	153.5	176.7	148.0	148.0	171.2	141.9	141.9	165.1	135.1	135.1	158.3	127.5	127.5	150.8
			SHC	130.2	153.5	176.7	124.8	148.0	171.2	118.7	141.9	165.1	111.9	135.1	158.3	104.3	127.5	150.8
		62	THC	153.9	153.9	171.9	148.3	148.3	168.2	141.9	141.9	165.0	135.1	135.1	158.3	127.5	127.5	150.7
			SHC	125.5	148.7	171.9	121.8	145.0	168.2	118.6	141.8	165.0	111.9	135.1	158.3	104.3	127.5	150.7
		67	THC	164.1	164.1	164.1	157.3	157.3	157.3	149.7	149.7	149.7	141.2	141.2	143.4	131.9	131.9	139.7
			SHC	106.0	129.2	152.4	103.3	126.5	149.7	100.3	123.5	146.7	97.0	120.2	143.4	93.3	116.5	139.7
		72	THC	176.2	176.2	176.2	169.0	169.0	169.0	161.0	161.0	161.0	152.1	152.1	152.1	142.4	142.4	142.4
			SHC	76.4	99.6	122.8	73.8	97.1	120.3	71.1	94.3	117.5	68.0	91.2	114.4	64.7	87.9	111.1
		76	THC	–	–	–	–	–	–	–	–	–	–	–	–	–	–	–
			SHC	–	–	–	–	–	–	–	–	–	–	–	–	–	–	–
6250 Cfm	EA (wb)	58	THC	157.3	157.3	183.1	151.7	151.7	177.5	145.4	145.4	171.2	138.3	138.3	164.1	130.5	130.5	156.3
			SHC	131.6	157.3	183.1	125.9	151.7	177.5	119.6	145.4	171.2	112.5	138.3	164.1	104.7	130.5	156.3
		62	THC	157.3	157.3	183.1	151.7	151.7	177.5	145.4	145.4	171.1	138.3	138.3	164.1	130.5	130.5	156.3
			SHC	131.6	157.3	183.1	125.9	151.7	177.5	119.6	145.4	171.1	112.5	138.3	164.1	104.7	130.5	156.3
		67	THC	166.1	166.1	166.1	159.2	159.2	159.3	151.3	151.3	156.2	142.7	142.7	152.8	133.2	133.2	149.0
			SHC	110.5	136.3	162.0	107.8	133.5	159.3	104.7	130.5	156.2	101.3	127.0	152.8	97.4	123.2	149.0
		72	THC	178.3	178.3	178.3	170.9	170.9	170.9	162.7	162.7	162.7	153.7	153.7	153.7	143.8	143.8	143.8
			SHC	78.1	103.9	129.7	75.6	101.4	127.2	72.8	98.6	124.4	69.8	95.5	121.3	66.4	92.2	118.0
		76	THC	–	–	–	–	–	–	–	–	–	–	–	–	–	–	–
			SHC	–	–	–	–	–	–	–	–	–	–	–	–	–	–	–

– Not operational
THC – Total Cooling Capacity, Gross (1,000 Btuh)
SHC – Sensible Cooling Capacity, Gross (1,000 Btuh)

PERFORMANCE DATA (cont.)

38AUD14 - 40RUA16 COMBINATION RATINGS

				AMBIENT TEMPERATURE														
				85			95			105			115			125		
				EA (db)			EA (db)			EA (db)			EA (db)			EA (db)		
				75	80	85	75	80	85	75	80	85	75	80	85	75	80	85
4500 Cfm	EA (wb)	58	THC	145.6	145.6	164.1	140.4	140.4	158.2	134.6	134.6	151.7	128.4	128.4	144.6	121.6	121.6	137.0
			SHC	127.1	145.6	164.1	122.5	140.4	158.2	117.5	134.6	151.7	112.1	128.4	144.6	106.2	121.6	137.0
		62	THC	149.1	149.1	162.7	142.7	142.7	159.2	135.8	135.8	155.2	128.8	128.8	149.6	121.7	121.7	142.3
			SHC	117.6	140.1	162.7	114.5	136.8	159.2	110.9	133.1	155.2	106.4	128.0	149.6	101.1	121.7	142.3
		67	THC	161.2	161.2	161.2	154.4	154.4	154.4	147.0	147.0	147.0	138.8	138.8	138.8	130.1	130.1	130.1
			SHC	94.6	117.4	140.3	91.8	114.6	137.5	88.8	111.6	134.5	85.6	108.4	131.2	82.1	104.9	127.7
		72	THC	174.0	174.0	174.0	167.0	167.0	167.0	159.1	159.1	159.1	150.6	150.6	150.6	141.2	141.2	141.2
			SHC	70.0	93.0	116.1	67.4	90.4	113.4	64.6	87.6	110.6	61.6	84.5	107.5	58.3	81.2	104.1
		76	THC	–	184.6	184.6	–	177.3	177.3	–	169.1	169.1	–	160.1	160.1	–	150.3	150.3
			SHC	–	72.9	96.6	–	70.5	94.0	–	67.7	91.2	–	64.8	88.2	–	61.6	85.0
5300 Cfm	EA (wb)	58	THC	152.7	152.7	172.0	147.0	147.0	165.7	140.9	140.9	158.8	134.3	134.3	151.3	127.0	127.0	143.1
			SHC	133.2	152.7	172.0	128.4	147.0	165.7	123.1	140.9	158.8	117.3	134.3	151.3	110.8	127.0	143.1
		62	THC	153.6	153.6	176.8	147.4	147.4	171.5	141.0	141.0	165.0	134.4	134.4	157.2	127.1	127.1	148.6
			SHC	126.2	151.5	176.8	122.0	146.8	171.5	117.2	141.0	165.0	111.6	134.4	157.2	105.6	127.1	148.6
		67	THC	164.9	164.9	164.9	157.8	157.8	157.9	150.2	150.2	150.6	141.7	141.7	144.5	132.6	132.6	140.7
			SHC	100.8	127.3	153.7	98.0	124.5	150.9	95.0	121.4	147.8	91.7	118.1	144.5	88.1	114.4	140.7
		72	THC	177.6	177.6	177.6	170.3	170.3	170.3	162.2	162.2	162.2	153.3	153.3	153.3	143.7	143.7	143.7
			SHC	72.4	99.1	125.7	69.9	96.5	123.1	67.0	93.7	120.2	64.0	90.6	117.1	60.6	87.2	113.7
		76	THC	–	188.2	188.2	–	180.6	180.6	–	172.1	172.1	–	162.9	162.9	–	152.8	152.8
			SHC	–	76.0	103.2	–	73.5	100.6	–	70.8	97.9	–	67.9	94.9	–	64.7	91.6
6000 Cfm	EA (wb)	58	THC	157.7	157.7	177.7	151.8	151.8	171.1	145.5	145.5	163.9	138.5	138.5	156.1	130.9	130.9	147.5
			SHC	137.6	157.7	177.7	132.6	151.8	171.1	127.0	145.5	163.9	120.9	138.5	156.1	114.3	130.9	147.5
		62	THC	157.8	157.8	184.5	152.0	152.0	177.7	145.6	145.6	170.2	138.6	138.6	162.1	131.0	131.0	153.2
			SHC	131.1	157.8	184.5	126.2	152.0	177.7	120.9	145.6	170.2	115.1	138.6	162.1	108.8	131.0	153.2
		67	THC	167.2	167.2	167.2	160.1	160.1	162.1	152.3	152.3	158.9	143.7	143.7	155.3	134.6	134.6	151.3
			SHC	105.9	135.5	165.0	103.1	132.6	162.1	100.0	129.5	158.9	96.7	126.0	155.3	93.0	122.1	151.3
		72	THC	180.0	180.0	180.0	172.6	172.6	172.6	164.3	164.3	164.3	155.3	155.3	155.3	145.4	145.4	145.4
			SHC	74.5	104.3	134.0	72.0	101.6	131.3	69.1	98.8	128.4	66.1	95.7	125.3	62.7	92.3	121.9
		76	THC	–	190.6	190.6	–	182.8	182.8	–	174.2	174.2	–	164.8	164.8	–	154.6	154.6
			SHC	–	78.6	108.9	–	76.1	106.3	–	73.4	103.5	–	70.5	100.5	–	67.3	97.3
6800 Cfm	EA (wb)	58	THC	162.2	162.2	182.9	156.2	156.2	176.1	149.6	149.6	168.6	142.4	142.4	160.4	134.5	134.5	151.5
			SHC	141.7	162.2	182.9	136.4	156.2	176.1	130.7	149.6	168.6	124.3	142.4	160.4	117.4	134.5	151.5
		62	THC	162.4	162.4	190.0	156.3	156.3	182.9	149.7	149.7	175.1	142.5	142.5	166.6	134.6	134.6	157.3
			SHC	134.9	162.4	190.0	129.9	156.3	182.9	124.4	149.7	175.1	118.4	142.5	166.6	111.8	134.6	157.3
		67	THC	169.5	169.5	177.2	162.2	162.2	174.2	154.3	154.3	170.7	145.7	145.7	166.7	136.4	136.4	162.1
			SHC	111.5	144.4	177.2	108.6	141.4	174.2	105.5	138.1	170.7	101.9	134.4	166.7	98.1	130.0	162.1
		72	THC	182.2	182.2	182.2	174.6	174.6	174.6	166.2	166.2	166.2	157.0	157.0	157.0	146.9	146.9	146.9
			SHC	76.8	109.9	143.1	74.2	107.3	140.5	71.4	104.4	137.6	68.3	101.3	134.5	65.0	97.9	131.0
		76	THC	–	–	–	–	–	–	–	–	–	–	–	–	–	–	–
			SHC	–	–	–	–	–	–	–	–	–	–	–	–	–	–	–
7500 Cfm	EA (wb)	58	THC	165.7	165.7	186.8	159.6	159.6	179.8	152.7	152.7	172.1	145.2	145.2	163.7	137.1	137.1	154.5
			SHC	144.7	165.7	186.8	139.3	159.6	179.8	133.4	152.7	172.1	126.8	145.2	163.7	119.7	137.1	154.5
		62	THC	165.9	165.9	193.9	159.6	159.6	186.7	152.8	152.8	178.7	145.3	145.3	169.9	137.2	137.2	160.4
			SHC	137.8	165.9	193.9	132.6	159.6	186.7	126.9	152.8	178.7	120.7	145.3	169.9	113.9	137.2	160.4
		67	THC	171.2	171.2	187.4	163.9	163.9	184.1	155.9	155.9	180.3	147.2	147.2	175.8	137.9	137.9	170.1
			SHC	116.2	151.8	187.4	113.2	148.7	184.1	109.9	145.1	180.3	106.2	141.0	175.8	101.8	135.9	170.1
		72	THC	183.8	183.8	183.8	176.0	176.0	176.0	167.5	167.5	167.5	158.2	158.2	158.2	148.0	148.0	148.0
			SHC	78.7	114.8	150.9	76.1	112.2	148.3	73.3	109.3	145.4	70.2	106.2	142.2	66.9	102.8	138.7
		76	THC	–	–	–	–	–	–	–	–	–	–	–	–	–	–	–
			SHC	–	–	–	–	–	–	–	–	–	–	–	–	–	–	–

– Not operational
THC – Total Cooling Capacity, Gross (1,000 Btuh)
SHC – Sensible Cooling Capacity, Gross (1,000 Btuh)

38AUZ16 - 40RUA16 **COMBINATION RATINGS**

				AMBIENT TEMPERATURE														
				85 EA (db)			95 EA (db)			105 EA (db)			115 EA (db)			125 EA (db)		
				75	80	85	75	80	85	75	80	85	75	80	85	75	80	85
4500 Cfm	EA (wb)	58	THC	169.9	169.9	190.5	164.1	164.1	184.2	157.5	157.5	176.8	151.4	151.4	170.0	–	–	–
			SHC	148.9	169.7	190.5	143.9	164.1	184.2	138.1	157.5	176.8	132.7	151.4	170.0	–	–	–
		62	THC	178.8	178.8	178.8	171.5	171.5	174.3	163.3	163.3	170.5	155.3	155.3	166.3	146.7	146.7	161.9
			SHC	133.1	155.4	177.8	129.5	151.9	174.3	125.7	148.1	170.5	121.7	144.0	166.3	117.4	139.7	161.9
		67	THC	193.8	193.8	193.8	186.0	186.0	186.0	177.5	177.5	177.5	168.6	168.6	168.6	–	–	–
			SHC	108.6	130.7	152.8	105.2	127.4	149.5	101.6	123.8	146.0	97.8	120.1	142.4	–	–	–
		72	THC	210.1	210.1	210.1	201.7	201.7	201.7	192.6	192.6	192.6	182.7	182.7	182.7	–	–	–
			SHC	85.0	106.1	127.1	81.6	103.0	124.3	77.9	99.5	121.1	74.0	95.9	117.7	–	–	–
		76	THC	–	223.4	223.4	–	215.0	215.0	–	205.5	205.5	–	194.8	194.8	–	–	–
			SHC	–	86.6	111.3	–	82.8	107.5	–	79.6	104.3	–	76.5	101.3	–	–	–
5250 Cfm	EA (wb)	58	THC	178.2	178.2	200.2	172.0	172.0	193.3	164.8	164.8	185.2	158.4	158.4	178.0	150.6	150.6	169.3
			SHC	156.3	178.2	200.2	150.8	172.0	193.3	144.4	164.8	185.2	138.7	158.4	178.0	131.9	150.6	169.3
		62	THC	184.0	184.0	193.8	176.0	176.0	189.8	167.6	167.6	185.5	159.7	159.7	180.7	151.0	151.0	174.3
			SHC	142.4	168.1	193.8	138.5	164.1	189.8	134.4	160.0	185.5	130.1	155.4	180.7	124.8	149.6	174.3
		67	THC	199.0	199.0	199.0	190.8	190.8	190.8	181.6	181.6	181.6	172.6	172.6	172.6	–	–	–
			SHC	114.5	140.0	165.6	111.0	136.6	162.2	107.2	132.9	158.6	103.5	129.2	154.9	–	–	–
		72	THC	215.3	215.3	215.3	206.5	206.5	206.5	196.9	196.9	196.9	186.7	186.7	186.7	–	–	–
			SHC	87.1	111.9	136.7	83.7	108.7	133.7	80.0	105.2	130.3	76.2	101.4	126.7	–	–	–
		76	THC	–	229.0	229.0	–	219.8	219.8	–	209.6	209.6	–	198.7	198.7	–	–	–
			SHC	–	89.0	117.8	–	86.3	115.2	–	83.2	105.2	–	79.7	103.1	–	–	–
6000 Cfm	EA (wb)	58	THC	185.2	185.2	208.1	178.7	178.7	200.8	170.9	170.9	192.2	164.2	164.2	184.6	156.1	156.1	175.6
			SHC	162.2	185.2	208.1	156.5	178.7	200.8	149.6	170.9	192.2	143.7	164.2	184.6	136.6	156.1	175.6
		62	THC	188.1	188.1	208.1	180.3	180.3	203.5	–	–	–	164.5	164.5	189.5	156.3	156.3	181.6
			SHC	150.7	179.4	208.1	146.6	175.1	203.5	–	–	–	135.6	162.5	189.5	129.7	155.6	181.6
		67	THC	203.1	203.1	203.1	194.6	194.6	194.6	185.6	185.6	185.6	175.8	175.8	175.8	–	–	–
			SHC	120.0	148.9	177.8	116.6	145.5	174.4	112.8	141.8	170.8	108.9	137.9	166.9	–	–	–
		72	THC	219.3	219.3	219.3	210.2	210.2	210.2	200.2	200.2	200.2	189.8	189.8	189.8	–	–	–
			SHC	89.2	117.4	145.7	85.8	114.2	142.6	82.0	110.6	139.1	78.2	106.8	135.5	–	–	–
		76	THC	–	232.9	232.9	–	223.4	223.4	–	213.1	213.1	–	201.9	201.9	–	–	–
			SHC	–	92.4	116.9	–	89.4	115.2	–	86.2	112.9	–	82.6	110.0	–	–	–
6750 Cfm	EA (wb)	58	THC	191.0	191.0	214.8	184.2	184.2	207.2	176.6	176.6	198.6	169.0	169.0	190.1	160.6	160.6	180.7
			SHC	167.3	191.0	214.8	161.2	184.2	207.2	154.5	176.6	198.6	147.8	169.0	190.1	140.5	160.6	180.7
		62	THC	192.1	192.1	219.7	184.5	184.5	212.5	177.8	177.8	202.9	168.9	168.9	197.3	160.6	160.6	187.6
			SHC	157.7	188.7	219.7	152.1	182.3	212.5	145.5	174.2	202.9	140.6	168.9	197.3	133.6	160.6	187.6
		67	THC	206.4	206.4	206.4	197.7	197.7	197.7	188.2	188.2	188.2	178.4	178.4	178.5	–	–	–
			SHC	125.4	157.5	189.7	121.8	154.0	186.2	118.0	150.2	182.5	114.1	146.3	178.5	–	–	–
		72	THC	222.5	222.5	222.5	213.1	213.1	213.1	203.1	203.1	203.1	192.4	192.4	192.4	–	–	–
			SHC	91.1	122.7	154.3	87.7	119.4	151.1	84.0	115.8	147.5	80.2	112.1	144.0	–	–	–
		76	THC	–	236.1	236.1	–	226.5	226.5	–	215.9	215.9	–	204.4	204.4	–	–	–
			SHC	–	95.3	124.6	–	92.3	122.2	–	89.0	119.5	–	85.4	116.3	–	–	–
7500 Cfm	EA (wb)	58	THC	196.0	196.0	220.5	189.0	189.0	212.6	181.2	181.2	204.0	173.1	173.1	194.8	–	–	–
			SHC	171.5	196.0	220.5	165.3	189.0	212.6	158.5	181.2	204.0	151.4	173.1	194.8	–	–	–
		62	THC	196.1	196.1	228.2	189.0	189.0	220.6	182.3	182.3	207.2	173.1	173.1	202.2	–	–	–
			SHC	162.9	195.5	228.2	157.3	189.0	220.6	148.6	177.9	207.2	144.0	173.1	202.2	–	–	–
		67	THC	209.1	209.1	209.1	200.2	200.2	200.2	190.5	190.5	193.8	180.5	180.5	189.7	–	–	–
			SHC	130.5	165.8	201.1	126.9	162.2	197.6	123.1	158.4	193.8	119.1	154.4	189.7	–	–	–
		72	THC	225.2	225.2	225.2	215.6	215.6	215.6	205.4	205.4	205.4	194.4	194.4	194.4	–	–	–
			SHC	93.0	127.9	162.7	89.6	124.5	159.4	85.9	120.9	155.9	82.0	117.1	152.2	–	–	–
		76	THC	–	238.9	238.9	–	229.0	229.0	–	218.1	218.1	–	206.4	206.4	–	–	–
			SHC	–	98.1	131.2	–	95.0	128.6	–	91.6	125.6	–	88.0	122.3	–	–	–

– Not operational

THC – Total Cooling Capacity, Gross (1,000 Btuh)

SHC – Sensible Cooling Capacity, Gross (1,000 Btuh)

PERFORMANCE DATA (cont.)

38AUZ16 - 40RUA25 COMBINATION RATINGS

				AMBIENT TEMPERATURE														
				85			95			105			115			125		
				EA (db)			EA (db)			EA (db)			EA (db)			EA (db)		
				75	80	85	75	80	85	75	80	85	75	80	85	75	80	85
6000 Cfm	EA (wb)	58	THC	188.1	188.1	211.9	181.9	181.9	205.0	175.2	175.2	197.4	167.8	167.8	189.1	159.7	159.7	180.0
			SHC	164.2	188.1	211.9	158.8	181.9	205.0	153.0	175.2	197.4	146.5	167.8	189.1	139.4	159.7	180.0
		62	THC	189.5	189.5	216.5	182.5	182.5	212.0	175.4	175.4	205.1	168.0	168.0	196.4	159.8	159.8	186.9
			SHC	154.7	185.6	216.5	150.8	181.4	212.0	145.7	175.4	205.1	139.5	168.0	196.4	132.7	159.8	186.9
		67	THC	203.3	203.3	203.3	195.6	195.6	195.6	187.2	187.2	187.2	177.9	177.9	177.9	167.8	167.8	172.0
			SHC	123.2	154.9	186.5	120.1	151.7	183.3	116.7	148.3	179.9	113.0	144.6	176.1	109.0	140.5	172.0
		72	THC	218.9	218.9	218.9	210.9	210.9	210.9	202.0	202.0	202.0	192.1	192.1	192.1	181.3	181.3	181.3
			SHC	90.2	122.0	153.8	87.2	119.0	150.8	84.0	115.8	147.5	80.5	112.2	143.9	76.7	108.3	140.0
		76	THC	–	232.4	232.4	–	224.0	224.0	–	214.7	214.7	–	–	–	–	–	–
			SHC	–	95.8	128.2	–	92.9	125.2	–	89.8	122.0	–	–	–	–	–	–
7000 Cfm	EA (wb)	58	THC	195.8	195.8	220.6	189.4	189.4	213.4	182.3	182.3	205.4	174.5	174.5	196.6	165.8	165.8	186.9
			SHC	171.0	195.8	220.6	165.3	189.4	213.4	159.1	182.3	205.4	152.4	174.5	196.6	144.8	165.8	186.9
		62	THC	196.0	196.0	229.2	189.5	189.5	221.6	182.4	182.4	213.3	174.6	174.6	204.2	166.0	166.0	194.1
			SHC	162.8	196.0	229.2	157.4	189.5	221.6	151.5	182.4	213.3	145.1	174.6	204.2	137.9	166.0	194.1
		67	THC	207.2	207.2	207.2	199.2	199.2	201.0	190.5	190.5	197.4	181.1	181.1	193.5	170.7	170.7	189.2
			SHC	131.3	167.8	204.3	128.1	164.6	201.0	124.6	161.0	197.4	120.9	157.2	193.5	116.8	153.0	189.2
		72	THC	222.7	222.7	222.7	214.4	214.4	214.4	205.4	205.4	205.4	195.2	195.2	195.2	184.1	184.1	184.1
			SHC	93.3	130.0	166.6	90.3	127.0	163.6	87.1	123.7	160.3	83.6	120.1	156.7	79.7	116.2	152.7
		76	THC	–	236.5	236.5	–	–	–	–	–	–	–	–	–	–	–	–
			SHC	–	100.0	137.1	–	–	–	–	–	–	–	–	–	–	–	–
8000 Cfm	EA (wb)	58	THC	202.0	202.0	227.6	195.3	195.3	220.1	187.9	187.9	211.8	179.8	179.8	202.6	170.7	170.7	192.4
			SHC	176.4	202.0	227.6	170.5	195.3	220.1	164.1	187.9	211.8	157.0	179.8	202.6	149.1	170.7	192.4
		62	THC	202.1	202.1	236.4	195.4	195.4	228.5	188.0	188.0	219.9	179.9	179.9	210.4	170.8	170.8	199.8
			SHC	167.9	202.1	236.4	162.3	195.4	228.5	156.2	188.0	219.9	149.4	179.9	210.4	141.9	170.8	199.8
		67	THC	210.1	210.1	221.2	202.1	202.1	217.8	193.3	193.3	214.0	183.7	183.7	209.7	173.2	173.2	204.8
			SHC	138.9	180.0	221.2	135.7	176.7	217.8	132.2	173.1	214.0	128.3	169.0	209.7	124.0	164.4	204.8
		72	THC	225.7	225.7	225.7	217.3	217.3	217.3	207.9	207.9	207.9	197.6	197.6	197.6	186.2	186.2	186.2
			SHC	96.3	137.7	179.1	93.4	134.7	176.1	90.1	131.4	172.8	86.6	127.8	169.1	82.7	123.9	165.1
		76	THC	–	–	–	–	–	–	–	–	–	–	–	–	–	–	–
			SHC	–	–	–	–	–	–	–	–	–	–	–	–	–	–	–
9000 Cfm	EA (wb)	58	THC	207.1	207.1	233.4	200.2	200.2	225.6	192.6	192.6	217.0	184.1	184.1	207.4	174.8	174.8	196.9
			SHC	180.8	207.1	233.4	174.8	200.2	225.6	168.2	192.6	217.0	160.7	184.1	207.4	152.6	174.8	196.9
		62	THC	207.2	207.2	242.3	200.3	200.3	234.2	192.7	192.7	225.3	184.2	184.2	215.4	174.9	174.9	204.5
			SHC	172.1	207.2	242.3	166.4	200.3	234.2	160.1	192.7	225.3	153.0	184.2	215.4	145.3	174.9	204.5
		67	THC	212.6	212.6	237.2	204.5	204.5	233.5	195.6	195.6	229.3	186.0	186.0	224.4	175.5	175.5	217.9
			SHC	146.2	191.7	237.2	142.9	188.2	233.5	139.2	184.3	229.3	135.1	179.7	224.4	130.1	174.0	217.9
		72	THC	228.0	228.0	228.0	219.4	219.4	219.4	209.9	209.9	209.9	199.5	199.5	199.5	187.9	187.9	187.9
			SHC	99.2	145.3	191.4	96.3	142.3	188.3	93.0	139.0	184.9	89.5	135.4	181.2	85.6	131.4	177.2
		76	THC	–	–	–	–	–	–	–	–	–	–	–	–	–	–	–
			SHC	–	–	–	–	–	–	–	–	–	–	–	–	–	–	–
10,000 Cfm	EA (wb)	58	THC	211.4	211.4	238.2	204.3	204.3	230.2	196.4	196.4	221.4	187.8	187.8	211.6	178.1	178.1	200.7
			SHC	184.6	211.4	238.2	178.4	204.3	230.2	171.5	196.4	221.4	164.0	187.8	211.6	155.5	178.1	200.7
		62	THC	211.5	211.5	247.3	204.4	204.4	239.0	196.6	196.6	229.8	187.9	187.9	219.7	178.2	178.2	208.3
			SHC	175.7	211.5	247.3	169.8	204.4	239.0	163.3	196.6	229.8	156.1	187.9	219.7	148.0	178.2	208.3
		67	THC	214.6	214.6	251.9	206.6	206.6	247.8	197.8	197.8	242.7	188.2	188.2	235.9	178.3	178.3	223.5
			SHC	152.9	202.4	251.9	149.4	198.6	247.8	145.4	194.0	242.7	140.5	188.2	235.9	133.1	178.3	223.5
		72	THC	229.9	229.9	229.9	221.2	221.2	221.2	211.6	211.6	211.6	201.0	201.0	201.0	–	–	–
			SHC	102.1	152.7	203.3	99.1	149.7	200.2	95.9	146.4	196.9	92.3	142.7	193.1	–	–	–
		76	THC	–	–	–	–	–	–	–	–	–	–	–	–	–	–	–
			SHC	–	–	–	–	–	–	–	–	–	–	–	–	–	–	–

– Not operational
THC – Total Cooling Capacity, Gross (1,000 Btuh)
SHC – Sensible Cooling Capacity, Gross (1,000 Btuh)

38AUD16 - 40RUA16 COMBINATION RATINGS

				AMBIENT TEMPERATURE														
				85			95			105			115			125		
				EA (db)			EA (db)			EA (db)			EA (db)			EA (db)		
				75	80	85	75	80	85	75	80	85	75	80	85	75	80	85
4500 Cfm	EA (wb)	58	THC	168.2	168.2	185.7	161.9	161.9	181.8	156.0	156.0	175.2	149.4	149.4	167.8	143.0	143.0	160.7
			SHC	145.7	165.7	185.7	142.0	161.9	181.8	136.7	156.0	175.2	130.9	149.4	167.8	125.3	143.0	160.7
		62	THC	176.6	176.6	176.6	169.7	169.7	172.9	162.2	162.2	169.3	153.7	153.7	165.1	145.0	145.0	160.6
			SHC	131.8	154.0	176.2	128.4	150.7	172.9	124.8	147.0	169.3	120.7	142.9	165.1	116.4	138.5	160.6
		67	THC	192.7	192.7	192.7	185.3	185.3	185.3	177.2	177.2	177.2	168.0	168.0	168.0	158.8	158.8	158.8
			SHC	108.2	130.1	151.9	104.9	126.9	148.9	101.5	123.5	145.5	97.6	119.7	141.8	93.7	115.9	138.1
		72	THC	210.4	210.4	210.4	202.4	202.4	202.4	193.7	193.7	193.7	184.1	184.1	184.1	173.7	173.7	173.7
			SHC	85.4	106.0	126.6	82.1	103.1	124.0	78.6	99.8	121.1	74.9	96.3	117.8	70.9	92.5	114.2
		76	THC	–	224.8	224.8	–	216.8	216.8	–	207.7	207.7	–	197.7	197.7	–	186.5	186.5
			SHC	–	86.9	111.7	–	83.2	107.9	–	80.0	104.8	–	77.2	102.0	–	73.8	96.1
5250 Cfm	EA (wb)	58	THC	175.7	175.7	197.4	169.9	169.9	190.9	163.6	163.6	183.9	157.0	157.0	176.5	148.9	148.9	167.4
			SHC	154.0	175.7	197.4	148.9	169.9	190.9	143.3	163.6	183.9	137.5	157.0	176.5	130.3	148.9	167.4
		62	THC	181.7	181.7	192.0	174.2	174.2	188.1	166.6	166.6	184.0	157.8	157.8	179.0	149.9	149.9	172.2
			SHC	141.0	166.5	192.0	137.2	162.7	188.1	133.4	158.7	184.0	128.8	153.9	179.0	123.4	147.8	172.2
		67	THC	198.0	198.0	198.0	190.1	190.1	190.1	181.6	181.6	181.6	172.0	172.0	172.0	162.6	162.6	162.6
			SHC	114.1	139.4	164.7	110.7	136.1	161.5	107.2	132.6	158.1	103.3	128.8	154.3	99.4	124.9	150.4
		72	THC	215.8	215.8	215.8	207.4	207.4	207.4	198.2	198.2	198.2	188.3	188.3	188.3	177.5	177.5	177.5
			SHC	87.6	112.0	136.4	84.4	108.9	133.5	80.8	105.6	130.4	77.1	102.0	127.0	73.1	98.2	123.3
		76	THC	–	230.9	230.9	–	222.1	222.1	–	212.5	212.5	–	202.0	202.0	–	190.4	190.4
			SHC	–	89.4	118.3	–	86.8	115.7	–	83.9	109.4	–	80.7	103.0	–	77.0	100.5
6000 Cfm	EA (wb)	58	THC	182.7	182.7	205.3	176.5	176.5	198.5	169.9	169.9	191.0	162.2	162.2	182.4	154.7	154.7	174.0
			SHC	160.0	182.7	205.3	154.6	176.5	198.5	148.7	169.9	191.0	142.0	162.2	182.4	135.3	154.7	174.0
		62	THC	185.8	185.8	205.9	178.6	178.6	200.2	170.8	170.8	195.6	163.3	163.3	186.9	155.9	155.9	177.2
			SHC	149.1	177.5	205.9	144.4	172.3	200.2	140.3	167.9	195.6	134.0	160.5	186.9	127.2	152.2	177.2
		67	THC	202.0	202.0	202.0	193.9	193.9	193.9	185.0	185.0	185.0	175.4	175.4	175.4	165.2	165.2	165.2
			SHC	119.6	148.2	176.9	116.3	144.9	173.6	112.6	141.3	170.1	108.7	137.5	166.3	104.6	133.4	162.2
		72	THC	219.9	219.9	219.9	211.2	211.2	211.2	201.7	201.7	201.7	191.8	191.8	191.8	180.4	180.4	180.4
			SHC	89.8	117.6	145.4	86.5	114.5	142.5	82.9	111.1	139.2	79.2	107.3	135.4	75.1	103.6	132.0
		76	THC	–	235.1	235.1	–	226.2	226.2	–	216.2	216.2	–	205.2	205.2	–	193.3	193.3
			SHC	–	92.9	121.7	–	90.2	114.7	–	87.1	112.8	–	83.7	110.2	–	79.9	107.2
6750 Cfm	EA (wb)	58	THC	188.5	188.5	212.0	182.1	182.1	204.8	175.1	175.1	197.0	167.0	167.0	187.9	159.2	159.2	179.2
			SHC	165.0	188.5	212.0	159.4	182.1	204.8	153.2	175.1	197.0	146.1	167.0	187.9	139.2	159.2	179.2
		62	THC	189.7	189.7	216.7	183.3	183.3	208.6	176.4	176.4	200.6	168.7	168.7	191.6	159.2	159.2	185.9
			SHC	155.5	186.1	216.7	149.8	179.2	208.6	144.0	172.3	200.6	137.5	164.6	191.6	132.4	159.2	185.9
		67	THC	205.3	205.3	205.3	196.8	196.8	196.8	187.8	187.8	187.8	178.1	178.1	178.1	167.5	167.5	173.4
			SHC	124.9	156.7	188.6	121.5	153.3	185.2	117.8	149.7	181.6	113.9	145.7	177.6	109.6	141.5	173.4
		72	THC	223.3	223.3	223.3	214.3	214.3	214.3	204.6	204.6	204.6	194.2	194.2	194.2	182.6	182.6	182.6
			SHC	91.8	122.9	154.0	88.5	119.7	151.0	84.9	116.3	147.7	81.2	112.7	144.2	77.1	108.7	140.3
		76	THC	–	238.8	238.8	–	229.4	229.4	–	219.1	219.1	–	207.9	207.9	–	195.4	195.4
			SHC	–	96.1	124.2	–	93.2	122.1	–	90.0	119.6	–	86.5	116.7	–	82.6	113.3
7500 Cfm	EA (wb)	58	THC	193.5	193.5	217.7	186.9	186.9	210.2	179.6	179.6	202.1	171.5	171.5	193.1	163.1	163.1	183.6
			SHC	169.3	193.5	217.7	163.5	186.9	210.2	157.1	179.6	202.1	150.0	171.5	193.1	142.6	163.1	183.6
		62	THC	194.9	194.9	221.2	188.2	188.2	213.2	180.1	180.1	207.5	171.5	171.5	200.4	163.1	163.1	190.6
			SHC	158.8	190.0	221.2	153.1	183.2	213.2	148.3	177.9	207.5	142.6	171.5	200.4	135.6	163.1	190.6
		67	THC	207.9	207.9	207.9	199.3	199.3	199.3	190.0	190.0	192.6	180.1	180.1	188.7	169.2	169.2	184.2
			SHC	129.9	164.9	199.8	126.4	161.4	196.4	122.7	157.7	192.6	118.7	153.7	188.7	114.4	149.3	184.2
		72	THC	226.0	226.0	226.0	216.9	216.9	216.9	207.0	207.0	207.0	196.3	196.3	196.3	184.4	184.4	184.4
			SHC	93.7	128.1	162.4	90.4	124.9	159.3	86.9	121.5	156.0	83.1	117.7	152.4	78.9	113.6	148.4
		76	THC	–	241.7	241.7	–	232.1	232.1	–	221.6	221.6	–	210.1	210.1	–	197.2	197.2
			SHC	–	98.9	131.0	–	96.0	128.6	–	92.7	125.9	–	89.2	122.7	–	85.2	119.2

– Not operational
THC – Total Cooling Capacity, Gross (1,000 Btuh)
SHC – Sensible Cooling Capacity, Gross (1,000 Btuh)

PERFORMANCE DATA (cont.)

38AUD16 - 40RUA25 COMBINATION RATINGS

				AMBIENT TEMPERATURE														
				85			95			105			115			125		
				EA (db)			EA (db)			EA (db)			EA (db)			EA (db)		
				75	80	85	75	80	85	75	80	85	75	80	85	75	80	85
6000 Cfm	EA (wb)	58	THC	189.5	189.5	213.0	182.9	182.9	205.6	175.8	175.8	197.7	168.1	168.1	189.0	159.8	159.8	179.8
			SHC	166.0	189.5	213.0	160.2	182.9	205.6	154.0	175.8	197.7	147.1	168.1	189.0	139.9	159.8	179.8
		62	THC	191.7	191.7	215.9	184.0	184.0	211.1	176.3	176.3	203.9	168.3	168.3	196.3	159.8	159.8	186.5
			SHC	155.8	185.8	215.9	151.6	181.3	211.1	146.0	174.9	203.9	140.1	168.2	196.3	133.1	159.8	186.5
		67	THC	207.6	207.6	207.6	199.1	199.1	199.1	189.8	189.8	189.8	180.1	180.1	180.1	169.2	169.2	170.3
			SHC	124.8	155.7	186.5	121.3	152.1	182.9	117.4	148.2	179.0	113.5	144.3	175.1	108.9	139.6	170.3
		72	THC	225.6	225.6	225.6	216.6	216.6	216.6	206.8	206.8	206.8	196.1	196.1	196.1	184.7	184.7	184.7
			SHC	92.7	123.8	154.8	89.3	120.4	151.4	85.7	116.7	147.7	81.8	112.7	143.7	77.6	108.5	139.5
		76	THC	–	240.7	240.7	–	231.2	231.2	–	220.8	220.8	–	209.6	209.6	–	–	–
			SHC	–	98.4	130.4	–	95.2	127.1	–	91.6	123.4	–	87.8	119.4	–	–	–
7000 Cfm	EA (wb)	58	THC	197.6	197.6	222.2	190.6	190.6	214.3	183.0	183.0	205.9	174.8	174.8	196.7	165.9	165.9	186.6
			SHC	173.0	197.6	222.2	166.8	190.6	214.3	160.1	183.0	205.9	152.9	174.8	196.7	145.2	165.9	186.6
		62	THC	197.6	197.6	230.6	190.6	190.6	222.5	183.0	183.0	213.6	174.8	174.8	204.1	165.8	165.8	193.7
			SHC	164.6	197.6	230.6	158.8	190.6	222.5	152.3	183.0	213.6	145.5	174.8	204.1	138.0	165.8	193.7
		67	THC	211.7	211.7	211.7	202.9	202.9	202.9	193.4	193.4	195.5	183.1	183.1	191.2	172.1	172.1	186.3
			SHC	132.4	167.8	203.3	128.7	164.1	199.6	124.8	160.2	195.5	120.6	155.9	191.2	116.0	151.2	186.3
		72	THC	229.8	229.8	229.8	220.5	220.5	220.5	210.3	210.3	210.3	199.3	199.3	199.3	187.6	187.6	187.6
			SHC	95.6	131.3	167.0	92.2	127.9	163.6	88.5	124.2	159.8	84.6	120.1	155.7	80.4	115.8	151.3
		76	THC	–	245.1	245.1	–	235.3	235.3	–	224.5	224.5	–	–	–	–	–	–
			SHC	–	102.4	138.9	–	99.1	135.5	–	95.5	131.8	–	–	–	–	–	–
8000 Cfm	EA (wb)	58	THC	204.0	204.0	229.5	196.7	196.7	221.4	188.8	188.8	212.5	180.1	180.1	202.8	170.9	170.9	192.3
			SHC	178.5	204.0	229.5	172.1	196.7	221.4	165.1	188.8	212.5	157.5	180.1	202.8	149.4	170.9	192.3
		62	THC	204.0	204.0	238.2	196.6	196.6	229.7	188.7	188.7	220.5	180.2	180.2	210.5	170.8	170.8	199.6
			SHC	169.8	204.0	238.2	163.6	196.6	229.7	157.0	188.7	220.5	149.8	180.2	210.5	142.0	170.8	199.6
		67	THC	214.7	214.7	219.1	205.8	205.8	215.2	196.1	196.1	211.0	185.7	185.7	206.3	174.5	174.5	201.0
			SHC	139.4	179.2	219.1	135.7	175.5	215.2	131.7	171.3	211.0	127.3	166.8	206.3	122.6	161.8	201.0
		72	THC	232.9	232.9	232.9	223.4	223.4	223.4	213.0	213.0	213.0	201.7	201.7	201.7	189.2	189.2	189.2
			SHC	98.4	138.6	178.8	94.9	135.1	175.3	91.2	131.3	171.4	87.2	127.2	167.3	82.8	122.8	162.7
		76	THC	–	248.6	248.6	–	–	–	–	–	–	–	–	–	–	–	–
			SHC	–	106.2	147.2	–	–	–	–	–	–	–	–	–	–	–	–
9000 Cfm	EA (wb)	58	THC	209.3	209.3	235.6	201.8	201.8	227.2	193.6	193.6	217.9	184.6	184.6	207.9	174.9	174.9	197.0
			SHC	183.0	209.3	235.6	176.5	201.8	227.2	169.2	193.6	217.9	161.3	184.6	207.9	152.8	174.9	197.0
		62	THC	209.3	209.3	244.5	201.7	201.7	235.7	193.5	193.5	226.2	184.6	184.6	215.8	174.9	174.9	204.5
			SHC	174.1	209.3	244.5	167.8	201.7	235.7	160.9	193.5	226.2	153.4	184.6	215.8	145.3	174.9	204.5
		67	THC	217.2	217.2	234.0	208.2	208.2	230.1	198.2	198.2	225.4	187.7	187.7	220.1	176.6	176.6	213.6
			SHC	145.9	190.0	234.0	142.2	186.1	230.1	138.0	181.7	225.4	133.4	176.7	220.1	128.2	170.9	213.6
		72	THC	235.4	235.4	235.4	225.7	225.7	225.7	215.1	215.1	215.1	203.7	203.7	203.7	191.4	191.4	191.4
			SHC	100.9	145.5	190.0	97.5	142.0	186.5	93.7	138.1	182.6	89.7	134.0	178.3	85.4	129.6	173.7
		76	THC	–	–	–	–	–	–	–	–	–	–	–	–	–	–	–
			SHC	–	–	–	–	–	–	–	–	–	–	–	–	–	–	–
10,000 Cfm	EA (wb)	58	THC	213.8	213.8	240.8	206.1	206.1	232.1	197.6	197.6	222.6	188.3	188.3	212.1	178.4	178.4	201.0
			SHC	186.9	213.8	240.8	180.1	206.1	232.1	172.7	197.6	222.6	164.5	188.3	212.1	155.8	178.4	201.0
		62	THC	213.8	213.8	249.9	206.0	206.0	240.8	197.6	197.6	231.0	188.3	188.3	220.3	178.3	178.3	208.6
			SHC	177.8	213.8	249.9	171.2	206.0	240.8	164.1	197.6	231.0	156.4	188.3	220.3	148.0	178.3	208.6
		67	THC	219.3	219.3	248.2	210.1	210.1	243.6	200.2	200.2	238.3	189.7	189.7	232.2	178.9	178.9	222.0
			SHC	152.2	200.2	248.2	148.2	195.9	243.6	143.7	191.0	238.3	138.8	185.5	232.2	132.0	177.0	222.0
		72	THC	237.4	237.4	237.4	227.6	227.6	227.6	216.8	216.8	216.8	205.2	205.2	205.2	192.7	192.7	192.7
			SHC	103.4	152.2	201.1	99.9	148.7	197.5	96.1	144.8	193.5	92.1	140.7	189.2	87.7	136.1	184.5
		76	THC	–	–	–	–	–	–	–	–	–	–	–	–	–	–	–
			SHC	–	–	–	–	–	–	–	–	–	–	–	–	–	–	–

– Not operational
THC – Total Cooling Capacity, Gross (1,000 Btuh)
SHC – Sensible Cooling Capacity, Gross (1,000 Btuh)

38AUZ25 - 40RUA25 **COMBINATION RATINGS**

				AMBIENT TEMPERATURE														
				85			95			105			115			125		
				EA (db)			EA (db)			EA (db)			EA (db)			EA (db)		
				75	80	85	75	80	85	75	80	85	75	80	85	75	80	85
6000 Cfm	EA (wb)	58	THC	221.5	221.5	248.3	213.5	213.5	239.8	204.9	204.9	230.0	195.3	195.3	219.4	184.5	184.5	207.4
			SHC	194.2	221.2	248.3	187.3	213.5	239.8	179.7	204.9	230.0	171.2	195.3	219.4	161.7	184.5	207.4
		62	THC	232.4	232.4	232.9	222.4	222.4	228.1	211.4	211.4	222.6	199.4	199.4	216.7	186.5	186.5	209.6
			SHC	173.9	203.4	232.9	169.1	198.6	228.1	163.7	193.2	222.6	157.9	187.3	216.7	151.3	180.5	209.6
		67	THC	251.7	251.7	251.7	240.8	240.8	240.8	228.9	228.9	228.9	215.9	215.9	215.9	201.6	201.6	201.6
			SHC	141.6	170.7	199.8	136.8	166.0	195.3	131.7	161.1	190.4	126.2	155.6	185.0	120.3	149.7	179.2
		72	THC	272.8	272.8	272.8	260.8	260.8	260.8	247.6	247.6	247.6	233.4	233.4	233.4	217.8	217.8	217.8
			SHC	110.4	138.3	166.1	105.5	133.8	162.0	100.3	128.9	157.5	94.8	123.6	152.4	88.9	117.9	147.0
		76	THC	–	290.9	290.9	–	278.1	278.1	–	263.7	263.7	–	248.5	248.5	–	231.6	231.6
			SHC	–	111.5	144.5	–	106.8	139.8	–	103.0	136.0	–	98.3	123.1	–	92.9	120.2
7000 Cfm	EA (wb)	58	THC	232.1	232.1	260.6	223.5	223.5	251.1	214.2	214.2	240.7	203.9	203.9	229.2	192.4	192.4	216.4
			SHC	203.5	232.1	260.6	195.9	223.5	251.1	187.7	214.2	240.7	178.6	203.9	229.2	168.5	192.4	216.4
		62	THC	238.9	238.9	253.7	228.3	228.3	248.2	217.1	217.1	242.1	205.0	205.0	234.5	192.8	192.8	222.1
			SHC	186.0	219.8	253.7	180.8	214.5	248.2	175.1	208.6	242.1	168.4	201.5	234.5	159.1	190.6	222.1
		67	THC	258.3	258.3	258.3	246.8	246.8	246.8	234.4	234.4	234.4	220.8	220.8	220.8	205.9	205.9	205.9
			SHC	149.2	182.8	216.5	144.4	178.1	211.8	139.2	173.0	206.7	133.6	167.4	201.2	127.5	161.4	195.3
		72	THC	279.3	279.3	279.3	266.7	266.7	266.7	253.0	253.0	253.0	238.3	238.3	238.3	222.0	222.0	222.0
			SHC	113.2	145.9	178.5	108.3	141.2	174.1	103.1	136.3	169.4	97.6	130.9	164.2	91.5	125.1	158.6
		76	THC	–	297.5	297.5	–	283.8	283.8	–	269.2	269.2	–	253.2	253.2	–	235.5	235.5
			SHC	–	116.1	154.6	–	112.0	138.2	–	107.4	137.4	–	102.4	133.9	–	96.7	129.1
8000 Cfm	EA (wb)	58	THC	240.8	240.8	270.6	231.8	231.8	260.5	221.8	221.8	249.4	210.9	210.9	237.2	198.8	198.8	223.6
			SHC	211.0	240.8	270.6	203.0	231.8	260.5	194.2	221.8	249.4	184.6	210.9	237.2	173.9	198.8	223.6
		62	THC	244.2	244.2	271.9	233.5	233.5	265.4	222.6	222.6	255.7	211.0	211.0	245.3	198.8	198.8	232.0
			SHC	196.6	234.3	271.9	190.9	228.2	265.4	183.3	219.5	255.7	175.2	210.2	245.3	165.5	198.8	232.0
		67	THC	263.5	263.5	263.5	251.6	251.6	251.6	238.7	238.7	238.7	224.6	224.6	224.6	209.2	209.2	210.8
			SHC	156.4	194.4	232.4	151.5	189.6	227.6	146.3	184.4	222.4	140.6	178.7	216.9	134.5	172.6	210.8
		72	THC	284.4	284.4	284.4	271.3	271.3	271.3	257.3	257.3	257.3	242.0	242.0	242.0	225.4	225.4	225.4
			SHC	115.9	153.0	190.2	110.9	148.3	185.7	105.8	143.3	180.9	100.2	137.9	175.6	94.2	132.0	169.9
		76	THC	–	302.5	302.5	–	288.4	288.4	–	273.4	273.4	–	256.8	256.8	–	–	–
			SHC	–	120.4	153.1	–	116.0	150.4	–	111.3	146.9	–	106.0	142.5	–	–	–
9000 Cfm	EA (wb)	58	THC	248.2	248.2	279.1	238.7	238.7	268.5	228.3	228.3	256.8	216.8	216.8	244.0	204.1	204.1	229.7
			SHC	217.4	248.2	279.1	209.0	238.7	268.5	199.8	228.3	256.8	189.7	216.8	244.0	178.5	204.1	229.7
		62	THC	249.3	249.3	285.8	238.9	238.9	277.7	228.3	228.3	266.5	216.8	216.8	253.2	204.1	204.1	238.4
			SHC	204.9	245.4	285.8	198.4	238.0	277.7	190.1	228.3	266.5	180.4	216.8	253.2	169.8	204.1	238.4
		67	THC	267.7	267.7	267.7	255.5	255.5	255.5	242.2	242.2	242.2	227.7	227.7	232.0	212.0	212.0	225.6
			SHC	163.4	205.6	247.7	158.4	200.6	242.9	153.1	195.3	237.6	147.3	189.7	232.0	141.1	183.4	225.6
		72	THC	288.5	288.5	288.5	275.2	275.2	275.2	260.8	260.8	260.8	245.1	245.1	245.1	228.1	228.1	228.1
			SHC	118.4	159.9	201.4	113.5	155.2	196.8	108.3	150.1	191.9	102.7	144.6	186.5	96.6	138.7	180.7
		76	THC	–	306.6	306.6	–	292.3	292.3	–	276.7	276.7	–	–	–	–	–	–
			SHC	–	124.2	162.9	–	119.7	159.4	–	114.8	155.2	–	–	–	–	–	–
10,000 Cfm	EA (wb)	58	THC	254.7	254.7	286.5	244.7	244.7	275.3	233.9	233.9	263.2	221.9	221.9	249.8	208.7	208.7	234.9
			SHC	222.9	254.7	286.5	214.1	244.7	275.3	204.6	233.9	263.2	194.0	221.9	249.8	182.5	208.7	234.9
		62	THC	254.6	254.6	297.3	244.8	244.8	285.3	233.9	233.9	273.1	221.9	221.9	259.2	208.6	208.6	243.8
			SHC	212.0	254.6	297.3	203.4	244.4	285.3	194.6	233.9	273.1	184.5	221.9	259.2	173.4	208.6	243.8
		67	THC	271.3	271.3	271.3	258.7	258.7	258.7	245.1	245.1	252.3	230.3	230.3	246.7	214.0	214.0	239.7
			SHC	170.0	216.4	262.7	165.0	211.4	257.7	159.6	206.0	252.3	153.9	200.3	246.7	147.3	193.5	239.7
		72	THC	292.0	292.0	292.0	278.4	278.4	278.4	263.7	263.7	263.7	247.4	247.4	247.4	230.0	230.0	230.0
			SHC	120.9	166.6	212.3	116.0	161.8	207.6	110.7	156.7	202.6	105.0	151.0	197.1	98.9	145.1	191.2
		76	THC	–	310.1	310.1	–	295.3	295.3	–	–	–	–	–	–	–	–	–
			SHC	–	127.8	171.4	–	123.2	167.5	–	–	–	–	–	–	–	–	–

– Not operational
THC – Total Cooling Capacity, Gross (1,000 Btuh)
SHC – Sensible Cooling Capacity, Gross (1,000 Btuh)

38AU

PERFORMANCE DATA (cont.)

38AUZ25- 40RUA28 COMBINATION RATINGS

				AMBIENT TEMPERATURE														
				85			95			105			115			125		
				EA (db)			EA (db)			EA (db)			EA (db)			EA (db)		
				75	80	85	75	80	85	75	80	85	75	80	85	75	80	85
7500 Cfm	EA (wb)	58	THC	236.2	236.2	266.2	228.0	228.0	256.9	219.0	219.0	246.7	209.0	209.0	235.5	198.1	198.1	223.2
			SHC	206.3	236.2	266.2	199.0	228.0	256.9	191.2	219.0	246.7	182.5	209.0	235.5	172.9	198.1	223.2
		62	THC	241.6	241.6	264.9	231.6	231.6	259.3	220.9	220.9	252.9	209.4	209.4	244.9	198.2	198.2	231.8
			SHC	191.3	228.1	264.9	186.2	222.8	259.3	180.6	216.7	252.9	173.9	209.4	244.9	164.7	198.2	231.8
		67	THC	262.3	262.3	262.3	251.0	251.0	251.0	238.9	238.9	238.9	225.7	225.7	225.7	211.4	211.4	211.4
			SHC	154.6	192.0	229.4	149.9	187.3	224.6	145.0	182.3	219.6	139.6	176.9	214.2	133.9	171.1	208.4
		72	THC	284.6	284.6	284.6	272.4	272.4	272.4	259.2	259.2	259.2	244.7	244.7	244.7	229.2	229.2	229.2
			SHC	116.2	153.9	191.6	111.6	149.3	186.9	106.8	144.3	181.9	101.5	139.0	176.4	95.9	133.3	170.7
		76	THC	–	303.1	303.1	–	289.9	289.9	–	275.8	275.8	–	260.4	260.4	–	–	–
			SHC	–	123.4	162.7	–	118.8	157.9	–	114.0	152.8	–	108.7	147.3	–	–	–
8750 Cfm	EA (wb)	58	THC	247.1	247.1	278.5	238.2	238.2	268.4	228.5	228.5	257.5	217.8	217.8	245.4	206.1	206.1	232.2
			SHC	215.7	247.1	278.5	208.0	238.2	268.4	199.5	228.5	257.5	190.2	217.8	245.4	179.9	206.1	232.2
		62	THC	248.7	248.7	286.9	238.6	238.6	279.1	228.7	228.7	267.4	218.0	218.0	254.9	206.2	206.2	241.2
			SHC	204.5	245.7	286.9	198.2	238.6	279.1	189.9	228.7	267.4	181.1	218.0	254.9	171.3	206.2	241.2
		67	THC	268.2	268.2	268.2	256.5	256.5	256.5	243.9	243.9	243.9	230.1	230.1	234.0	215.3	215.3	227.8
			SHC	164.0	206.9	249.7	159.3	202.1	244.9	154.2	197.0	239.7	148.7	191.4	234.0	142.8	185.3	227.8
		72	THC	290.8	290.8	290.8	277.9	277.9	277.9	264.2	264.2	264.2	249.2	249.2	249.2	233.1	233.1	233.1
			SHC	120.1	163.2	206.3	115.4	158.5	201.5	110.5	153.4	196.4	105.1	148.0	190.9	99.4	142.2	184.9
		76	THC	–	309.2	309.2	–	295.5	295.5	–	280.8	280.8	–	–	–	–	–	–
			SHC	–	128.3	172.8	–	123.7	168.0	–	118.7	162.8	–	–	–	–	–	–
10,000 Cfm	EA (wb)	58	THC	255.9	255.9	288.4	246.5	246.5	277.8	236.2	236.2	266.1	224.9	224.9	253.4	212.5	212.5	239.4
			SHC	223.5	255.9	288.4	215.2	246.5	277.8	206.2	236.2	266.1	196.3	224.9	253.4	185.5	212.5	239.4
		62	THC	256.1	256.1	299.5	246.7	246.7	288.4	236.3	236.3	276.4	225.0	225.0	263.1	212.6	212.6	248.6
			SHC	212.7	256.1	299.5	204.9	246.7	288.4	196.3	236.3	276.4	186.9	225.0	263.1	176.6	212.6	248.6
		67	THC	272.9	272.9	272.9	260.7	260.7	264.2	247.7	247.7	258.7	233.6	233.6	252.6	218.5	218.5	245.9
			SHC	173.0	221.1	269.2	168.1	216.1	264.2	162.9	210.8	258.7	157.2	204.9	252.6	151.1	198.5	245.9
		72	THC	295.5	295.5	295.5	282.2	282.2	282.2	268.1	268.1	268.1	252.7	252.7	252.7	236.1	236.1	236.1
			SHC	123.7	172.1	220.4	119.0	167.3	215.5	114.0	162.2	210.3	108.6	156.6	204.7	102.8	150.7	198.6
		76	THC	–	314.0	314.0	–	299.8	299.8	–	–	–	–	–	–	–	–	–
			SHC	–	133.0	182.6	–	128.2	177.7	–	–	–	–	–	–	–	–	–
11,250 Cfm	EA (wb)	58	THC	263.3	263.3	296.8	253.4	253.4	285.5	242.6	242.6	273.4	230.7	230.7	260.0	217.7	217.7	245.4
			SHC	229.9	263.3	296.8	221.2	253.4	285.5	211.8	242.6	273.4	201.5	230.7	260.0	190.1	217.7	245.4
		62	THC	263.5	263.5	308.1	253.6	253.6	296.5	242.8	242.8	283.9	230.9	230.9	270.0	217.9	217.9	254.8
			SHC	218.9	263.5	308.1	210.6	253.6	296.5	201.7	242.8	283.9	191.8	230.9	270.0	181.0	217.9	254.8
		67	THC	276.6	276.6	287.7	264.2	264.2	282.3	250.9	250.9	276.5	236.5	236.5	269.8	221.3	221.3	262.1
			SHC	181.4	234.6	287.7	176.4	229.4	282.3	171.1	223.8	276.5	165.2	217.5	269.8	158.6	210.3	262.1
		72	THC	299.3	299.3	299.3	285.7	285.7	285.7	271.2	271.2	271.2	255.4	255.4	255.4	238.5	238.5	238.5
			SHC	127.2	180.6	234.1	122.4	175.7	229.1	117.3	170.6	223.8	111.9	165.0	218.0	106.1	159.0	211.9
		76	THC	–	–	–	–	–	–	–	–	–	–	–	–	–	–	–
			SHC	–	–	–	–	–	–	–	–	–	–	–	–	–	–	–
12,500 Cfm	EA (wb)	58	THC	269.7	269.7	303.9	259.3	259.3	292.2	248.1	248.1	279.5	235.7	235.7	265.6	222.2	222.2	250.4
			SHC	235.5	269.7	303.9	226.4	259.3	292.2	216.6	248.1	279.5	205.8	235.7	265.6	194.1	222.2	250.4
		62	THC	269.8	269.8	315.5	259.4	259.4	303.4	248.2	248.2	290.2	235.8	235.8	275.7	222.4	222.4	260.0
			SHC	224.2	269.8	315.5	215.5	259.4	303.4	206.2	248.2	290.2	195.9	235.8	275.7	184.7	222.4	260.0
		67	THC	279.8	279.8	305.1	267.1	267.1	299.3	253.7	253.7	292.8	239.2	239.2	285.1	223.8	223.8	275.5
			SHC	189.4	247.2	305.1	184.3	241.8	299.3	178.6	235.7	292.8	172.3	228.7	285.1	164.9	220.2	275.5
		72	THC	302.4	302.4	302.4	288.5	288.5	288.5	273.7	273.7	273.7	257.7	257.7	257.7	240.4	240.4	240.4
			SHC	130.5	188.9	247.3	125.7	184.0	242.3	120.6	178.7	236.9	115.1	173.1	231.0	109.2	167.0	224.7
		76	THC	–	–	–	–	–	–	–	–	–	–	–	–	–	–	–
			SHC	–	–	–	–	–	–	–	–	–	–	–	–	–	–	–

– Not operational
THC – Total Cooling Capacity, Gross (1,000 Btuh)
SHC – Sensible Cooling Capacity, Gross (1,000 Btuh)

38AUD25- 40RUA25 **COMBINATION RATINGS**

				AMBIENT TEMPERATURE														
				85			95			105			115			125		
				EA (db)			EA (db)			EA (db)			EA (db)			EA (db)		
				75	80	85	75	80	85	75	80	85	75	80	85	75	80	85
6000 Cfm	EA (wb)	58	THC	220.0	220.0	247.0	212.1	212.1	238.2	203.4	203.4	228.5	193.7	193.7	217.7	182.8	182.8	205.5
			SHC	193.0	220.0	247.0	186.0	212.1	238.2	178.3	203.4	228.5	169.8	193.7	217.7	160.1	182.8	205.5
		62	THC	230.1	230.1	234.9	220.0	220.0	230.0	209.0	209.0	224.6	197.0	197.0	218.3	183.9	183.9	210.5
			SHC	174.4	204.7	234.9	169.6	199.8	230.0	164.2	194.4	224.6	158.2	188.3	218.3	151.2	180.8	210.5
		67	THC	251.0	251.0	251.0	239.9	239.9	239.9	227.9	227.9	227.9	214.6	214.6	214.6	199.9	199.9	199.9
			SHC	142.4	172.3	202.2	137.6	167.6	197.6	132.5	162.6	192.7	126.9	157.1	187.3	120.9	151.1	181.3
		72	THC	274.2	274.2	274.2	262.0	262.0	262.0	248.7	248.7	248.7	234.1	234.1	234.1	217.9	217.9	217.9
			SHC	111.3	140.1	168.9	106.4	135.5	164.6	101.2	130.6	160.0	95.6	125.2	154.8	89.5	119.3	149.1
		76	THC	–	294.4	294.4	–	281.0	281.0	–	266.4	266.4	–	250.7	250.7	–	233.4	233.4
			SHC	–	113.0	146.0	–	108.7	141.7	–	104.6	133.3	–	99.7	126.2	–	94.1	122.4
7000 Cfm	EA (wb)	58	THC	230.8	230.8	259.3	222.2	222.2	249.7	212.8	212.8	239.2	202.3	202.3	227.5	190.6	190.6	214.4
			SHC	202.3	230.8	259.3	194.7	222.2	249.7	186.4	212.8	239.2	177.2	202.3	227.5	166.9	190.6	214.4
		62	THC	236.4	236.4	255.9	225.9	225.9	250.3	215.3	215.3	241.3	203.8	203.8	231.2	191.3	191.3	220.8
			SHC	186.6	221.3	255.9	181.4	215.8	250.3	174.2	207.7	241.3	166.3	198.7	231.2	158.0	189.4	220.8
		67	THC	257.6	257.6	257.6	245.9	245.9	245.9	233.2	233.2	233.2	219.3	219.3	219.3	204.0	204.0	204.0
			SHC	150.4	185.0	219.6	145.5	180.2	214.9	140.3	175.0	209.8	134.6	169.4	204.2	128.4	163.2	198.1
		72	THC	281.0	281.0	281.0	268.1	268.1	268.1	254.2	254.2	254.2	238.8	238.8	238.8	222.0	222.0	222.0
			SHC	114.4	148.1	181.8	109.5	143.4	177.3	104.2	138.4	172.5	98.5	132.8	167.2	92.3	126.8	161.3
		76	THC	–	301.1	301.1	–	287.2	287.2	–	272.2	272.2	–	255.7	255.7	–	–	–
			SHC	–	118.2	151.3	–	113.9	143.1	–	109.2	140.7	–	104.0	136.6	–	–	–
8000 Cfm	EA (wb)	58	THC	239.6	239.6	269.4	230.5	230.5	259.2	220.5	220.5	248.0	209.4	209.4	235.6	197.0	197.0	221.7
			SHC	209.9	239.6	269.4	201.8	230.5	259.2	193.0	220.5	248.0	183.3	209.4	235.6	172.3	197.0	221.7
		62	THC	241.9	241.9	274.0	232.2	232.2	263.9	222.0	222.0	253.2	210.1	210.1	242.3	197.0	197.0	230.1
			SHC	197.3	235.6	274.0	189.6	226.8	263.9	181.7	217.5	253.2	173.3	207.8	242.3	163.9	197.0	230.1
		67	THC	262.7	262.7	262.7	250.5	250.5	250.5	237.3	237.3	237.3	222.9	222.9	222.9	207.1	207.1	214.0
			SHC	158.0	197.1	236.3	153.0	192.2	231.4	147.6	186.9	226.1	141.8	181.1	220.3	135.5	174.7	214.0
		72	THC	286.3	286.3	286.3	272.8	272.8	272.8	258.4	258.4	258.4	242.5	242.5	242.5	225.1	225.1	225.1
			SHC	117.4	155.7	194.1	112.4	150.9	189.5	107.1	145.8	184.5	101.3	140.1	179.0	95.1	134.0	173.0
		76	THC	–	306.6	306.6	–	292.0	292.0	–	276.5	276.5	–	–	–	–	–	–
			SHC	–	122.8	157.5	–	118.2	154.2	–	113.3	150.2	–	–	–	–	–	–
9000 Cfm	EA (wb)	58	THC	247.2	247.2	278.0	237.6	237.6	267.3	227.1	227.1	255.5	215.4	215.4	242.4	202.4	202.4	227.8
			SHC	216.4	247.2	278.0	207.9	237.6	267.3	198.7	227.1	255.5	188.4	215.4	242.4	176.9	202.4	227.8
		62	THC	249.4	249.4	281.3	239.3	239.3	272.2	227.9	227.9	262.4	215.4	215.4	251.6	202.3	202.3	236.4
			SHC	202.5	241.9	281.3	195.4	233.8	272.2	187.7	225.1	262.4	179.2	215.4	251.6	168.3	202.3	236.4
		67	THC	266.8	266.8	266.8	254.2	254.2	254.2	240.6	240.6	241.9	225.9	225.9	235.9	209.5	209.5	229.3
			SHC	165.2	208.8	252.4	160.1	203.8	247.4	154.7	198.3	241.9	148.7	192.3	235.9	142.2	185.7	229.3
		72	THC	290.4	290.4	290.4	276.6	276.6	276.6	261.8	261.8	261.8	245.4	245.4	245.4	227.6	227.6	227.6
			SHC	120.1	163.0	205.9	115.1	158.2	201.2	109.8	152.9	196.1	103.9	147.2	190.5	97.6	141.0	184.4
		76	THC	–	310.7	310.7	–	295.9	295.9	–	–	–	–	–	–	–	–	–
			SHC	–	126.7	167.1	–	122.1	163.2	–	–	–	–	–	–	–	–	–
10,000 Cfm	EA (wb)	58	THC	253.7	253.7	285.4	243.7	243.7	274.2	232.7	232.7	261.9	220.5	220.5	248.2	206.9	206.9	233.0
			SHC	221.9	253.7	285.4	213.1	243.7	274.2	203.5	232.7	261.9	192.7	220.5	248.2	180.8	206.9	233.0
		62	THC	255.5	255.5	290.4	244.0	244.0	282.1	232.6	232.6	271.8	220.5	220.5	257.6	206.9	206.9	241.9
			SHC	208.4	249.4	290.4	201.5	241.8	282.1	193.5	232.6	271.8	183.3	220.5	257.6	171.9	206.9	241.9
		67	THC	270.1	270.1	270.1	257.2	257.2	262.7	243.3	243.3	257.0	228.0	228.0	250.8	211.4	211.4	243.3
			SHC	172.1	220.0	267.8	166.9	214.8	262.7	161.4	209.2	257.0	155.2	203.0	250.8	148.3	195.8	243.3
		72	THC	293.9	293.9	293.9	279.7	279.7	279.7	264.4	264.4	264.4	247.8	247.8	247.8	229.6	229.6	229.6
			SHC	122.8	170.1	217.4	117.7	165.1	212.5	112.3	159.8	207.3	106.4	154.0	201.6	100.1	147.8	195.4
		76	THC	–	314.3	314.3	–	299.1	299.1	–	–	–	–	–	–	–	–	–
			SHC	–	130.6	175.9	–	125.8	171.7	–	–	–	–	–	–	–	–	–

– Not operational
THC – Total Cooling Capacity, Gross (1,000 Btuh)
SHC – Sensible Cooling Capacity, Gross (1,000 Btuh)

PERFORMANCE DATA (cont.)

38AUD25- 40RUA28 COMBINATION RATINGS

				AMBIENT TEMPERATURE														
				85			95			105			115			125		
				EA (db)			EA (db)			EA (db)			EA (db)			EA (db)		
				75	80	85	75	80	85	75	80	85	75	80	85	75	80	85
7500 Cfm	EA (wb)	58	THC	237.5	237.5	261.6	228.5	228.5	251.7	218.7	218.7	240.9	207.7	207.7	228.8	195.9	195.9	215.8
			SHC	213.4	237.5	261.6	205.3	228.5	251.7	196.5	218.7	240.9	186.6	207.7	228.8	176.0	195.9	215.8
		62	THC	241.6	241.6	261.6	230.8	230.8	255.7	220.1	220.1	246.2	207.9	207.9	236.1	196.1	196.1	222.6
			SHC	201.2	231.4	261.6	195.7	225.7	255.7	188.0	217.1	246.2	179.8	207.9	236.1	169.5	196.1	222.6
		67	THC	262.2	262.2	262.2	250.1	250.1	250.1	237.0	237.0	237.0	222.5	222.5	222.5	207.4	207.4	207.4
			SHC	163.9	194.6	225.3	158.9	189.6	220.3	153.6	184.2	214.9	147.7	178.3	208.9	141.6	172.2	202.7
		72	THC	285.5	285.5	285.5	272.2	272.2	272.2	257.9	257.9	257.9	242.1	242.1	242.1	225.6	225.6	225.6
			SHC	125.1	156.0	186.9	120.2	151.0	181.9	114.9	145.7	176.5	109.2	139.9	170.6	103.2	133.8	164.5
		76	THC	–	305.5	305.5	–	291.1	291.1	–	–	–	–	–	–	–	–	–
			SHC	–	124.9	156.9	–	120.0	151.8	–	–	–	–	–	–	–	–	–
8750 Cfm	EA (wb)	58	THC	248.0	248.0	273.2	238.3	238.3	262.5	227.7	227.7	250.8	215.9	215.9	237.8	203.3	203.3	223.9
			SHC	222.8	248.0	273.2	214.1	238.3	262.5	204.6	227.7	250.8	194.0	215.9	237.8	182.6	203.3	223.9
		62	THC	249.2	249.2	280.0	238.6	238.6	270.9	227.9	227.9	258.8	216.1	216.1	245.4	203.4	203.4	231.0
			SHC	213.6	246.8	280.0	206.3	238.6	270.9	197.0	227.9	258.8	186.8	216.1	245.4	175.8	203.4	231.0
		67	THC	267.7	267.7	267.7	254.9	254.9	254.9	241.2	241.2	241.2	226.3	226.3	228.3	210.6	210.6	221.6
			SHC	174.8	210.1	245.4	169.7	204.9	240.2	164.2	199.3	234.5	158.2	193.2	228.3	151.8	186.7	221.6
		72	THC	291.3	291.3	291.3	277.3	277.3	277.3	262.4	262.4	262.4	246.1	246.1	246.1	228.9	228.9	228.9
			SHC	130.3	165.7	201.2	125.2	160.6	196.0	119.9	155.2	190.5	114.0	149.2	184.4	108.0	143.1	178.1
		76	THC	–	311.4	311.4	–	–	–	–	–	–	–	–	–	–	–	–
			SHC	–	130.1	166.5	–	–	–	–	–	–	–	–	–	–	–	–
10,000 Cfm	EA (wb)	58	THC	256.5	256.5	282.5	246.1	246.1	271.1	234.9	234.9	258.8	222.4	222.4	245.0	209.1	209.1	230.4
			SHC	230.4	256.5	282.5	221.2	246.1	271.1	211.1	234.9	258.8	199.9	222.4	245.0	187.9	209.1	230.4
		62	THC	256.7	256.7	291.5	246.3	246.3	279.7	235.1	235.1	267.0	222.6	222.6	252.8	209.3	209.3	237.6
			SHC	221.9	256.7	291.5	213.0	246.3	279.7	203.2	235.1	267.0	192.4	222.6	252.8	180.9	209.3	237.6
		67	THC	271.7	271.7	271.7	258.6	258.6	259.0	244.6	244.6	253.0	229.2	229.2	246.3	213.3	213.3	238.9
			SHC	185.1	224.9	264.6	179.8	219.4	259.0	174.1	213.6	253.0	167.8	207.1	246.3	161.1	200.0	238.9
		72	THC	295.6	295.6	295.6	281.2	281.2	281.2	265.8	265.8	265.8	249.0	249.0	249.0	–	–	–
			SHC	135.2	175.0	214.9	130.0	169.8	209.6	124.6	164.2	203.9	118.6	158.2	197.7	–	–	–
		76	THC	–	–	–	–	–	–	–	–	–	–	–	–	–	–	–
			SHC	–	–	–	–	–	–	–	–	–	–	–	–	–	–	–
11,250 Cfm	EA (wb)	58	THC	263.5	263.5	290.3	252.7	252.7	278.3	240.9	240.9	265.3	227.9	227.9	251.0	214.0	214.0	235.7
			SHC	236.8	263.5	290.3	227.0	252.7	278.3	216.4	240.9	265.3	204.7	227.9	251.0	192.2	214.0	235.7
		62	THC	263.7	263.7	299.5	252.9	252.9	287.1	241.1	241.1	273.7	228.0	228.0	258.9	214.1	214.1	243.1
			SHC	228.0	263.7	299.5	218.6	252.9	287.1	208.4	241.1	273.7	197.1	228.0	258.9	185.1	214.1	243.1
		67	THC	275.0	275.0	282.7	261.6	261.6	276.8	247.2	247.2	270.3	231.8	231.8	262.6	216.0	216.0	251.8
			SHC	194.9	238.8	282.7	189.4	233.1	276.8	183.4	226.8	270.3	176.6	219.6	262.6	168.2	210.0	251.8
		72	THC	299.0	299.0	299.0	284.2	284.2	284.2	268.4	268.4	268.4	251.3	251.3	251.3	–	–	–
			SHC	139.8	184.0	228.1	134.6	178.7	222.7	129.0	173.0	216.9	123.1	166.8	210.6	–	–	–
		76	THC	–	–	–	–	–	–	–	–	–	–	–	–	–	–	–
			SHC	–	–	–	–	–	–	–	–	–	–	–	–	–	–	–
12,500 Cfm	EA (wb)	58	THC	269.5	269.5	296.9	258.2	258.2	284.4	245.9	245.9	270.9	232.4	232.4	256.0	218.0	218.0	240.1
			SHC	242.2	269.5	296.9	232.0	258.2	284.4	221.0	245.9	270.9	208.8	232.4	256.0	195.9	218.0	240.1
		62	THC	269.7	269.7	306.3	258.4	258.4	293.4	246.1	246.1	279.4	232.5	232.5	264.0	218.1	218.1	247.6
			SHC	233.2	269.7	306.3	223.4	258.4	293.4	212.8	246.1	279.4	201.0	232.5	264.0	188.6	218.1	247.6
		67	THC	277.8	277.8	299.7	264.1	264.1	293.2	249.7	249.7	285.6	234.5	234.5	274.3	218.8	218.8	261.2
			SHC	204.0	251.8	299.7	198.2	245.7	293.2	191.6	238.6	285.6	183.1	228.7	274.3	173.4	217.3	261.2
		72	THC	301.7	301.7	301.7	286.6	286.6	286.6	270.5	270.5	270.5	–	–	–	–	–	–
			SHC	144.3	192.6	241.0	139.0	187.2	235.5	133.4	181.5	229.6	–	–	–	–	–	–
		76	THC	–	–	–	–	–	–	–	–	–	–	–	–	–	–	–
			SHC	–	–	–	–	–	–	–	–	–	–	–	–	–	–	–

– Not operational
THC – Total Cooling Capacity, Gross (1,000 Btuh)
SHC – Sensible Cooling Capacity, Gross (1,000 Btuh)

ELECTRICAL DATA

38AUZ07 COOLING WITHOUT POWERED CONVENIENCE OUTLET

V–Ph–Hz	VOLTAGE RANGE		COMP 1		OFM (ea)		POWER SUPPLY	
	MIN	MAX	RLA	LRA	WATTS	FLA	MCA	Fuse
208/230–3–60	187	253	19	123	325	1.5	26.8	45
460–3–60	414	506	9.7	62	325	0.8	13.7	20
575–3–60	518	633	7.4	50	325	0.7	10.7	15

38AUZ07 COOLING WITH POWERED CONVENIENCE OUTLET

V–Ph–Hz	VOLTAGE RANGE		COMP 1		OFM (ea)		POWER SUPPLY	
	MIN	MAX	RLA	LRA	WATTS	FLA	MCA	Fuse
208/230–3–60	187	253	19	123	325	1.5	31.6	50
460–3–60	414	506	9.7	62	325	0.8	15.9	25
575–3–60	518	633	7.4	50	325	0.7	12.4	15

38AUZ08 COOLING WITHOUT POWERED CONVENIENCE OUTLET

V–Ph–Hz	VOLTAGE RANGE		COMP 1		OFM (ea)		POWER SUPPLY	
	MIN	MAX	RLA	LRA	WATTS	FLA	MCA	Fuse
208/230–3–60	187	253	25	164	325	1.5	34.3	50
460–3–60	414	506	12.2	100	325	0.8	16.9	25
575–3–60	518	633	9.0	78	325	0.7	12.7	20

38AUZ08 COOLING WITH POWERED CONVENIENCE OUTLET

V–Ph–Hz	VOLTAGE RANGE		COMP 1		OFM (ea)		POWER SUPPLY	
	MIN	MAX	RLA	LRA	WATTS	FLA	MCA	Fuse
208/230–3–60	187	253	25	164	325	1.5	39.1	60
460–3–60	414	506	12.2	100	325	0.8	19.1	30
575–3–60	518	633	9.0	78	325	0.7	14.4	20

ELECTRICAL DATA (cont.)

38AUZ12 COOLING WITHOUT POWERED CONVENIENCE OUTLET

V–Ph–Hz	VOLTAGE RANGE		COMP 1		OFM (ea)		POWER SUPPLY	
	MIN	MAX	RLA	LRA	WATTS	FLA	MCA	Fuse
208/230–3–60	187	253	30.1	225	325	1.5	40.6	60
460–3–60	414	506	16.7	114	325	0.8	22.5	30
575–3–60	518	633	12.2	80	325	0.7	16.7	25

38AUZ12 COOLING WITH POWERED CONVENIENCE OUTLET

V–Ph–Hz	VOLTAGE RANGE		COMP 1		OFM (ea)		POWER SUPPLY	
	MIN	MAX	RLA	LRA	WATTS	FLA	MCA	Fuse
208/230–3–60	187	253	30.1	225	325	1.5	45.4	60
460–3–60	414	506	16.7	114	325	0.8	24.7	30
575–3–60	518	633	12.2	80	325	0.7	18.4	30

38AUD12 COOLING WITHOUT POWERED CONVENIENCE OUTLET

V–Ph–Hz	VOLTAGE RANGE		COMP 1		COMP 2		OFM (ea)		POWER SUPPLY	
	MIN	MAX	RLA	LRA	RLA	LRA	WATTS	FLA	MCA	Fuse
208/230–3–60	187	253	15.9	110	15.9	110	325	1.5	38.8	50
460–3–60	414	506	7.7	52	7.7	52	325	0.8	18.9	25
575–3–60	518	633	5.7	39	5.7	39	325	0.7	14.2	20

38AUD12 COOLING WITH POWERED CONVENIENCE OUTLET

V–Ph–Hz	VOLTAGE RANGE		COMP 1		COMP 2		OFM (ea)		POWER SUPPLY	
	MIN	MAX	RLA	LRA	RLA	LRA	WATTS	FLA	MCA	Fuse
208/230–3–60	187	253	15.9	110	15.9	110	325	1.5	43.6	50
460–3–60	414	506	7.7	52	7.7	52	325	0.8	21.1	25
575–3–60	518	633	5.7	39	5.7	39	325	0.7	15.9	20

ELECTRICAL DATA (cont.)

38AUZ14 COOLING WITHOUT POWERED CONVENIENCE OUTLET

V–Ph–Hz	VOLTAGE RANGE		COMP 1		OFM (ea)		POWER SUPPLY	
	MIN	MAX	RLA	LRA	WATTS	FLA	MCA	Fuse
208/230–3–60	187	253	48.1	245	325	1.5	63.1	80
460–3–60	414	506	18.6	125	325	0.8	24.9	30
575–3–60	518	633	14.7	100	325	0.7	19.8	30

38AUZ14 COOLING WITH POWERED CONVENIENCE OUTLET

V–Ph–Hz	VOLTAGE RANGE		COMP 1		OFM (ea)		POWER SUPPLY	
	MIN	MAX	RLA	LRA	WATTS	FLA	MCA	Fuse
208/230–3–60	187	253	48.1	245	325	1.5	67.9	80
460–3–60	414	506	18.6	125	325	0.8	27.1	45
575–3–60	518	633	14.7	100	325	0.7	21.5	30

38AUD14 COOLING WITHOUT POWERED CONVENIENCE OUTLET

V–Ph–Hz	VOLTAGE RANGE		COMP 1		COMP 2		OFM (ea)		POWER SUPPLY	
	MIN	MAX	RLA	LRA	RLA	LRA	WATTS	FLA	MCA	Fuse
208/230–3–60	187	253	22.40	149	22.40	149	325	1.5	53.4	60
460–3–60	414	506	10.6	75	10.6	75	325	0.8	25.5	30
575–3–60	518	633	7.7	54	7.7	54	325	0.7	18.7	25

38AUD14 COOLING WITH POWERED CONVENIENCE OUTLET

V–Ph–Hz	VOLTAGE RANGE		COMP 1		COMP 2		OFM (ea)		POWER SUPPLY	
	MIN	MAX	RLA	LRA	RLA	LRA	WATTS	FLA	MCA	Fuse
208/230–3–60	187	253	22.40	149	22.40	149	325	1.5	58.2	80
460–3–60	414	506	10.6	75	10.6	75	325	0.8	27.7	35
575–3–60	518	633	7.7	54	7.7	54	325	0.7	20.4	25

38AUZ16 COOLING WITHOUT POWERED CONVENIENCE OUTLET

V–Ph–Hz	VOLTAGE RANGE		COMP 1		COMP 2		OFM (ea)		POWER SUPPLY	
	MIN	MAX	RLA	LRA	RLA	LRA	WATTS	FLA	MCA	Fuse
208/230–3–60	187	253	25	164	25	164	325	1.5	60.8	80
460–3–60	414	506	12.2	100	12.2	100	325	0.8	29.9	40
575–3–60	518	633	9	78	9	78	325	0.7	22.4	30

38AUZ16 COOLING WITH POWERED CONVENIENCE OUTLET

V–Ph–Hz	VOLTAGE RANGE		COMP 1		COMP 2		OFM (ea)		POWER SUPPLY	
	MIN	MAX	RLA	LRA	RLA	LRA	WATTS	FLA	MCA	Fuse
208/230–3–60	187	253	25	164	25	164	325	1.5	66.6	90
460–3–60	414	506	12.2	100	12.2	100	325	0.8	32.1	40
575–3–60	518	633	9	78	9	78	325	0.7	24.1	30

38AUD16 COOLING WITHOUT POWERED CONVENIENCE OUTLET

V–Ph–Hz	VOLTAGE RANGE		COMP 1		COMP 2		OFM (ea)		POWER SUPPLY	
	MIN	MAX	RLA	LRA	RLA	LRA	WATTS	FLA	MCA	Fuse
208/230–3–60	187	253	25	164	25	164	325	1.5	60.7	80
460–3–60	414	506	12.2	100	12.2	100	325	0.8	29.8	40
575–3–60	518	633	9	78	9	78	325	0.6	22.0	30

38AUD16 COOLING WITH POWERED CONVENIENCE OUTLET

V–Ph–Hz	VOLTAGE RANGE		COMP 1		COMP 2		OFM (ea)		POWER SUPPLY	
	MIN	MAX	RLA	LRA	RLA	LRA	WATTS	FLA	MCA	Fuse
208/230–3–60	187	253	25	164	25	164	325	1.5	65.6	90
460–3–60	414	506	12.2	100	12.2	100	325	0.8	32.1	40
575–3–60	518	633	9	78	9	78	325	0.7	24.1	30

38AUZ25 COOLING WITHOUT POWERED CONVENIENCE OUTLET

V–Ph–Hz	VOLTAGE RANGE		COMP 1		COMP 2		OFM (ea)		POWER SUPPLY	
	MIN	MAX	RLA	LRA	RLA	LRA	WATTS	FLA	MCA	Fuse
208/230–3–60	187	253	30.1	225	30.1	225	325	1.5	73.7	100
460–3–60	414	506	16.7	114	16.7	114	325	0.8	40.8	50
575–3–60	518	633	12.2	80	12.2	80	325	0.7	30.3	40

38AUZ25 COOLING WITH POWERED CONVENIENCE OUTLET

V–Ph–Hz	VOLTAGE RANGE		COMP 1		COMP 2		OFM (ea)		POWER SUPPLY	
	MIN	MAX	RLA	LRA	RLA	LRA	WATTS	FLA	MCA	Fuse
208/230–3–60	187	253	30.1	225	30.1	225	325	1.5	78.5	100
460–3–60	414	506	16.7	114	16.7	114	325	0.8	43.0	50
575–3–60	518	633	12.2	80	12.2	80	325	0.7	32.0	40

38AUD25 COOLING WITHOUT POWERED CONVENIENCE OUTLET

V–Ph–Hz	VOLTAGE RANGE		COMP 1		COMP 2		OFM (ea)		POWER SUPPLY	
	MIN	MAX	RLA	LRA	RLA	LRA	WATTS	FLA	MCA	Fuse
208/230–3–60	187	253	30.1	225	30.1	225	325	1.5	73.7	100
460–3–60	414	506	16.7	114	16.7	114	325	0.8	40.8	50
575–3–60	518	633	12.2	80	12.2	80	325	0.7	30.3	40

38AUD25 COOLING WITH POWERED CONVENIENCE OUTLET

V–Ph–Hz	VOLTAGE RANGE		COMP 1		COMP 2		OFM (ea)		POWER SUPPLY	
	MIN	MAX	RLA	LRA	RLA	LRA	WATTS	FLA	MCA	Fuse
208/230–3–60	187	253	30.1	225	30.1	225	325	1.5	78.5	100
460–3–60	414	506	16.7	114	16.7	114	325	0.8	43.0	50
575–3–60	518	633	12.2	80	12.2	80	325	0.7	32.0	40

APPLICATION DATA

Operating limits

Maximum outdoor temperature . . . . . 125°F

Minimum return-air temperature (40RUA) . . . . . 55°F

Maximum return-air temperature (40RUA) . . . . . 95°F

Range of acceptable saturation suction temperature . . . . . 20 to 50°F

Maximum discharge temperature . . . . . 275°F

Minimum discharge superheat . . . . . 60°F

NOTES:

1. Select air handler at no less than 300 cfm/ton (nominal condensing unit capacity).
2. Total combined draw of the field-supplied liquid line solenoid valve and air handler fan contactor must not exceed 22 va. If the specified va must be exceeded, use a remote relay to control the load.

MINIMUM OUTDOOR-AIR OPERATING TEMPERATURE

UNIT 38AU	MINIMUM OUTDOOR TEMP (°F)	
	Std	With MotorMaster I® Control†
Z07	35	–20
Z08	35	
Z12	35	
Z14	35	
Z16	35	
Z25	35	
D12	35	
D14	35	
D16	35	
D25	35	

† Wind baffles (field-supplied and field-installed) are recommended for all units with MotorMaster I® control. Refer to Low Ambient Temperature Control Installation Instructions for additional information.

Refrigerant piping

IMPORTANT: Do not bury refrigerant piping underground.

It is recommended that the refrigerant piping for all commercial split systems include a liquid line solenoid valve, a liquid line filter drier and a sight glass.

For refrigerant lines longer than 75 lineal ft, a liquid line solenoid valve installed at the **indoor** unit and a suction accumulator are required. Refer to the Refrigerant Specialties Part Numbers table.

REFRIGERANT SPECIALTIES PART NUMBERS

LIQUID LINE SIZE (in.)	LIQUID LINE SOLENOID VALVE (LLSV)	LLSV COIL	SIGHT GLASS
3/8	EF680033	EF680037	KM680008
1/2	EF680035	EF680037	KM680004
5/8	EF680036	EF680037	KM680005

NOTE: 38AUD units require TWO sets of parts.

Puron-duty Filter Drier(s)

Model-Size	Qty	Liquid Line OD	Desiccant Volume	Part Number Ref
38AUZ*07	1	3/8-in	8 cu. in.	KH43LG091
38AUZ*08	1	1/2-in	16 cu. in.	KH43LG085
38AUZ*12	1	1/2-in	16 cu. in.	KH43LG085
38AUZ*14	1	5/8-in	16 cu. in.	KH43LG086
38AUZ*16	1	5/8-in	30 cu. in.	KH43LG087
38AUZ*25	1	5/8-in	30 cu. in.	KH43LG087
38AUD*12	2	3/8-in	8 cu. in.	KH43LG091
38AUD*14	2	1/2-in	16 cu. in.	KH43LG085
38AUD*16	2	1/2-in	16 cu. in.	KH43LG085
38AUD*25	2	1/2-in	16 cu. in.	KH43LG085

38AUZ 07-14 PIPING RECOMMENDATIONS (SINGLE-CIRCUIT UNIT)

R–410A	Equivalent Length									
	Ft	0–38		38–75		75–113		113–150		150–188	
	m	0–12		12–23		23–34		34–46		46–57	
Model	Linear Length Ft m	0–25 0–8		25–50 8–15		50–75 15–23		75–100 23–30		100–125 30–38	
38AUZ*07	Liquid Line	3/8		3/8	1/2	1/2		1/2	5/8	1/2	5/8
	Max Lift (ft) Novation RTPF	25 25		42 50	50 50	75 75		90 100	100 100	86 125	101 125
	Suction Line	7/8	7/8	7/8	1 1/8	1 1/8		1 1/8		1 1/8	
	Charge (lbs) Novation RTPF	8.4 14.0		9.6 15.2	11.1 16.7	13.1 18.6		15.0 20.6	18.8 24.4	16.9 22.5	22.6 28.2
38AUZ*08	Liquid Line	1/2		1/2		1/2		1/2		1/2	
	Max Lift (ft) Novation RTPF	25 25		50 50		75 75		100 100		112 93	
	Suction Line	7/8	1 1/8	1 1/8		1 1/8		1 1/8		1 1/8	
	Charge (lbs) Novation RTPF	11.8 18.6		12.9 19.7		14.9 21.7		16.8 23.8		18.7 25.5	
38AUZ*12	Liquid Line	1/2		1/2		1/2	5/8	1/2	5/8	1/2	5/8
	Max Lift (ft) Novation RTPF	25 25		50 50		48 57	73 75	54 61	87 100	43 47	84 99
	Suction Line	1 1/8		1 1/8		1 1/8		1 1/8	1 3/8	1 1/8	1 3/8
	Charge (lbs) Novation RTPF	13.4 19.8		15.4 21.8		17.3 23.5	20.1 26.2	20.0 26.2	23.7 29.9	22.1 DNU	26.8 33.0
38AUZ*14	Liquid Line	1/2		1/2	5/8	1/2	5/8	5/8	3/4	5/8	3/4
	Max Lift (ft) Novation RTPF	25 25		50 50	50 NR	45 75	75 NR	100 100	100 NR	95 125	107 NR
	Suction Line	1 1/8		1 1/8		1 3/8		1 3/8		1 3/8	
	Charge (lbs) Novation RTPF	16.9 46.0		18.8 47.9	20.7 NR	21.3 50.4	24.1 NR	27.2 56.3	32.2 NR	30.2 59.3	36.5 NR

Legend:	
Equivalent Length	Equivalent tubing length, including effects of refrigeration specialties devices
Linear Length	Linear tubing length, feet
Liquid Line	Tubing size, inches OD.
Max Lift	Maximum liquid lift (indoor unit ABOVE outdoor unit only), at maximum permitted liquid line pressure drop • Linear Length Less than 75 ft (23 m): Minimum 2.0° F subcooling entering TXV • Linear Length Greater than 75 ft (23m): Minimum 0.5° F subcooling entering TXV
Suction Line	Tube size, inches OD See highlighted: Do not use with RTPF coil model
Charge	Charge Quantity, lbs. Calculated for both liquid line sizes (where applicable), but only with larger suction line size (where applicable)
DNU	Do Not Use (pressure drop exceeds available subcooling in this model)
NOTE:	For applications with equivalent length greater than 188 ft (57 m) and/0r linear length greater than 125 ft (38 m), contact your local Carrier representative.

38AUZ 16-25 PIPING RECOMMENDATIONS (SINGLE-CIRCUIT UNIT)

R-410A	Equivalent Length					
	Ft	0-38	38-75	75-113	113-150	150-188
	m	0-12	12-23	23-34	34-46	46-57
	Linear Length					
	Ft	0-25	25-50	50-75	75-100	100-125
Model	m	0-8	8-15	15-23	23-30	30-38
38AUZ*16	Liquid Line	5/8	5/8	5/8	5/8	5/8
	Max Lift	25	50	75	100	125
	Suction Line	1-1/8	1-3/8	1-3/8	1-3/8	1-3/8 1-5/8
	Charge (lbs)					
	Novation	24.3	27.5	30.6	33.7	37.8
	RTPF	42.7	45.9	49.0	52.1	56.2
38AUZ*25	Liquid Line	5/8	5/8	5/8	5/8	5/8
	Max Lift	25	50	71	77	63
	Suction Line	1-1/8 1-3/8	1-3/8	1-3/8 1-5/8	1-5/8	1-5/8
	Charge (lbs)	37.8	40.8	44.6	47.8	51.1
Legend:						
Equivalent Length	Equivalent tubing length, including effects of refrigeration specialties devices					
Linear Length	Typical linear tubing length, (50% added to linear to define Equivalent Length for this table)					
Liquid Line	Tubing size, inches OD.					
Max Lift	Maximum liquid lift (indoor unit ABOVE outdoor unit only), at maximum permitted liquid line pressure drop — • Linear Length Less than 75 ft (23 m): Minimum 2.0° F subcooling entering TXV • Linear Length Greater than 75 ft (23m): Minimum 0.5° F subcooling entering TXV					
Suction Line	Tube size, inches OD					
Charge	Charge Quantity, lbs. Calculated for both liquid line sizes (where applicable), but only with larger suction line size (where applicable)					
NOTE:	For applications with equivalent length greater than 188 ft (57 m) and/0r linear length greater than 125 ft (38 m), contact your local Carrier representative.					

38AUD 12-14 PIPING RECOMMENDATIONS (TWO-CIRCUIT UNIT)

NOTE: 38AUD requires TWO sets of refrigeration piping									
R–410A	Equivalent Length								
	Ft	0–38	38–75	75–113		113–150		150–188	
	m	0–12	12–23	23–34		34–46		46–57	
Model	Linear Length Ft m	 0–25 0–8	 25–50 8–15	 50–75 15–23		 75–100 23–30		 100–125 30–38	
38AUD*12	Liquid Line	3/8	3/8	3/8	1/2	3/8	1/2	3/8	1/2
	Max Lift (ft) Novation RTPF	 25 25	 50 50	 28 75	 75 NR	 DNU 83	 100 100	 DNU 62	 99 125
	Suction Line	7/8	7/8	1 1/8		1 1/8		1 1/8	
	Charge (lbs) (ea circuit) Novation RTPF	 7.1 13.3	 8.1 14.3	 9.6 15.8	 11.9 NR	 DNU 16.9	 13.8 20.0	 DNU 18.1	 15.8 22.0
38AUD*14	Liquid Line	3/8	3/8	3/8	1/2	3/8	1/2	3/8	1/2
	Max Lift (ft) Novation RTPF	 25 25	 50 50	 48 75	 75 NR	 DNU 54	 100 100	 DNU 45	 122 125
	Suction Line	7/8	7/8	1 1/8		1 1/8		1 1/8	
	Charge (lbs) (ea circuit) Novation RTPF	 9.7 23.0	 10.7 24.0	 14.5 27.8	 NR	 DNU 26.6	 16.4 29.7	 DNU 27.8	 18.4 31.7

Legend:	
Equivalent Length	Equivalent tubing length, including effects of refrigeration specialties devices
Linear Length	Linear tubing length, feet
Liquid Line	Tubing size, inches OD.
Max Lift	Maximum liquid lift (indoor unit ABOVE outdoor unit only), at maximum permitted liquid line pressure drop • Linear Length Less than 75 ft (23 m): Minimum 2.0° F subcooling entering TXV • Linear Length Greater than 75 ft (23m): Minimum 0.5° F subcooling entering TXV
Suction Line	Tube size, inches OD See highlighted: Do not use with RTPF coil model
Charge	Charge Quantity, lbs. Calculated for both liquid line sizes (where applicable), but only with larger suction line size (where applicable)
DNU	Do Not Use (pressure drop exceeds available subcooling in this model)
NR	Not Recommended (use smaller liquid tube size)
NOTE:	For applications with equivalent length greater than 188 ft (57 m) and/0r linear length greater than 125 ft (38 m), contact your local Carrier representative.

38AUD 16-25 PIPING RECOMMENDATIONS (TWO-CIRCUIT UNIT)

NOTE: 38AUD requires TWO sets of refrigeration piping									
R-410A	Equivalent Length								
	Ft	0-38	38-75	75-113		113-150		150-188	
	m	0-12	12-23	23-34		34-46		46-57	
	Linear Length								
	Ft	0-25	25-50	50-75		75-100		100-125	
Model	m	0-8	8-15	15-23		23-30		30-38	
38AUD*16	Liquid Line	$^1/_2$	$^1/_2$	$^1/_2$		$^1/_2$		$^1/_2$	
	Max Lift	25	50	75		100		125	
	Suction Line	$^7/_8$	$1^1/_8$	$1^1/_8$		$1^1/_8$		$1^1/_8$	
	Charge ea. (lbs)								
	Novation	11.7	13.8	15.7		17.6		19.6	
	RTPF	21.7	23.8	25.7		27.6		29.6	
38AUD*25	Liquid Line	$^1/_2$	$^1/_2$	$^1/_2$	$^5/_8$	$^1/_2$	$^5/_8$	$^1/_2$	$^5/_8$
	Max Lift	25	50	54	75	60	99	46	95
	Suction Line	$1^1/_8$	$1^1/_8$	$1^1/_8$		$1^1/_8$	$1^3/_8$	$1^3/_8$	
	Charge (lbs) 1	19.3	21.0	23.0	26.0	25.9	29.7	28.0	32.7
	2	18.3	20.3	22.0	25.0	24.9	28.7	27.0	31.7
Legend:									
Equivalent Length	Equivalent tubing length, including effects of refrigeration specialties devices								
Linear Length	Typical linear tubing length (50% added to linear to define Equivalent Length for this table)								
Liquid Line	Tubing size, inches OD.								
Max Lift	Maximum liquid lift (indoor unit ABOVE outdoor unit only), at maximum permitted liquid line pressure drop — • Linear Length Less than 75 ft (23 m): Minimum 2.0° F subcooling entering TXV • Linear Length Greater than 75 ft (23m): Minimum 0.5° F subcooling entering TXV								
Suction Line	Tube size, inches OD								
Charge	Charge Quantity, lbs. Calculated for both liquid line sizes (where applicable), but only with larger suction line size (where applicable)								
NOTE:	For applications with equivalent length greater than 188 ft (57 m) and/0r linear length greater than 125 ft (38 m), contact your local Bryant representative.								

38AU

TYPICAL PIPING AND WIRING

Roof Installation and a Ceiling-Mounted Fan Coil

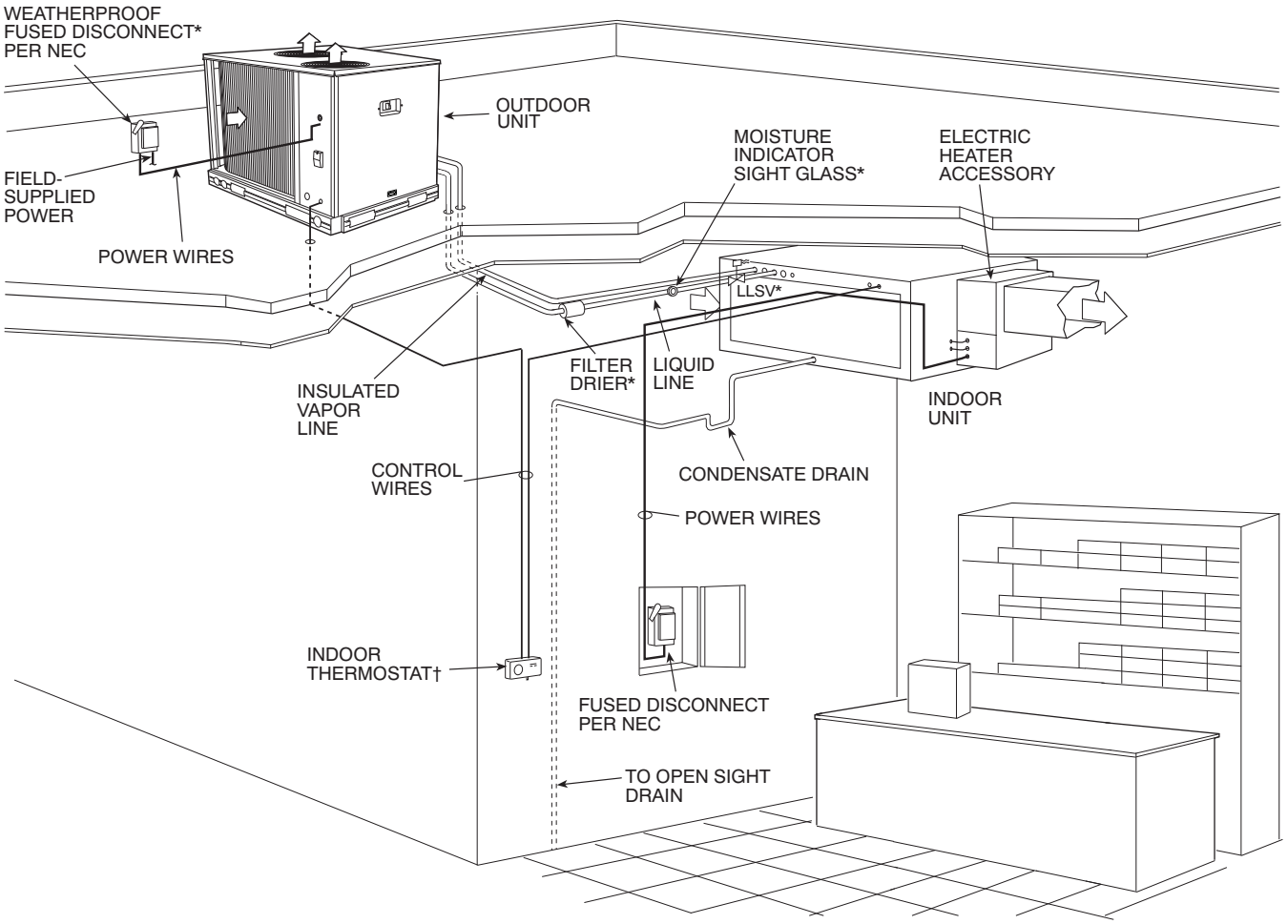

LEGEND:

NEC – National Electrical Code

TXV – Thermostatic Expansion Valve

* Field–supplied

† Double riser may be required. Consult condensing unit product data catalog for details.

NOTES:

1. All piping must follow standard refrigerant piping techniques. Refer to Carrier System Design Manual for details.
2. All wiring must comply with the applicable local and national codes.
3. Wiring and piping shown are general points-of-connection guides only and are not intended for, or to include all details for, a specific installation.
4. Liquid line solenoid valve (solenoid drop control) is recommended to prevent refrigerant migration to the compressor.
5. Internal factory-supplied TXVs not shown.

TYPICAL PIPING AND WIRING (CONT.)

Roof Installation and a Vertical Discharge Fan Coil

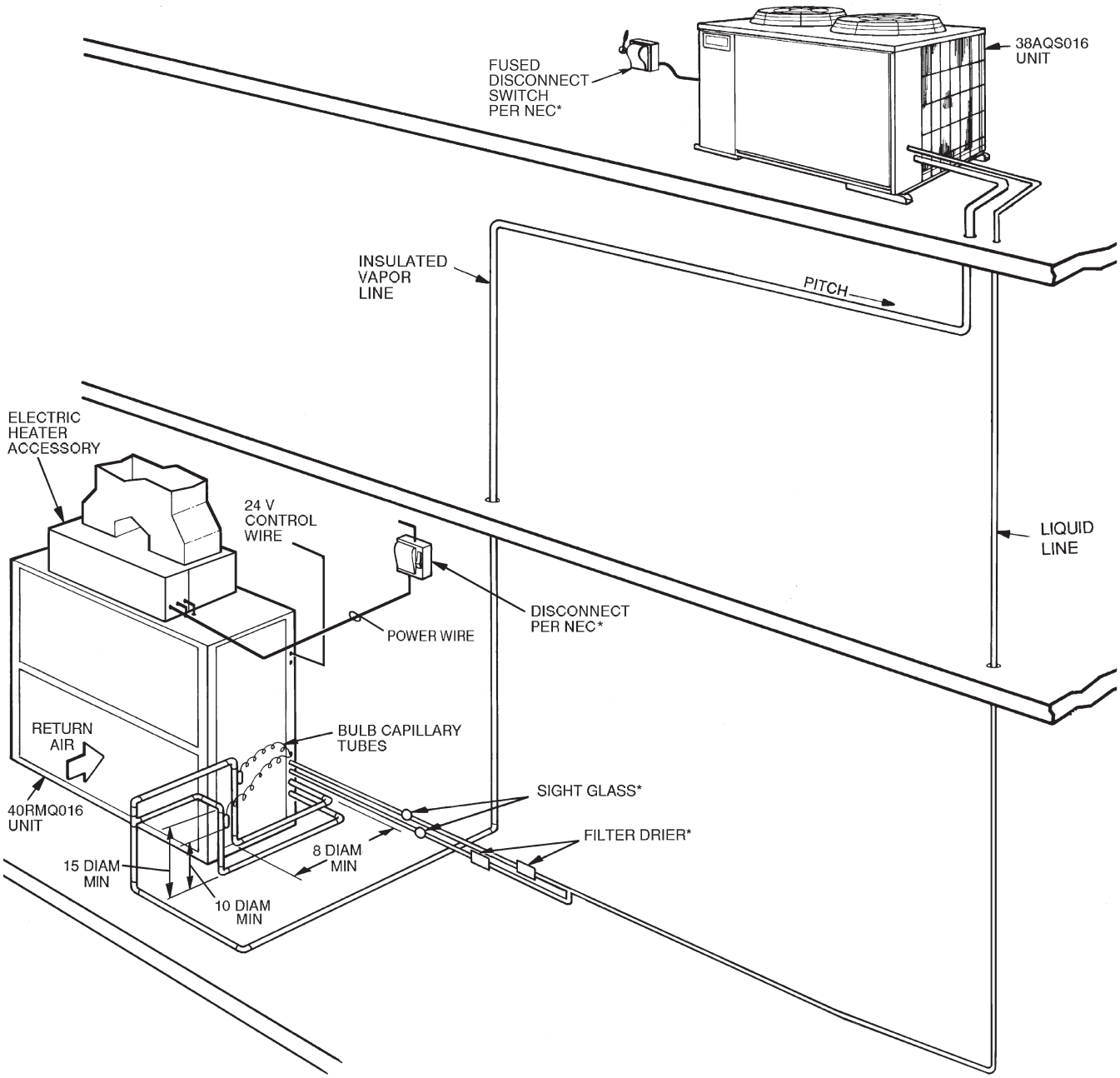

LEGEND

DIAM — Diameter
NEC — National Electrical Code
TXV — Thermostatic Expansion Valve
Piping

*Field supplied.

NOTES:
1. All piping must follow standard refrigerant piping techniques. Refer to Carrier System Design Manual for details.
2. All wiring must comply with applicable local and national codes.
3. Wiring and piping shown are general points-of-connection guides only and are not intended for, or to include all details for, a specific installation.
4. Filter driers must be bi-flow type suited for heat pump duty.
5. Internal factory-supplied TXVs and check valves not shown.

C101129

TYPICAL PIPING AND WIRING (CONT.)

Ground Level Installation and Vertical Discharge Fan Coil

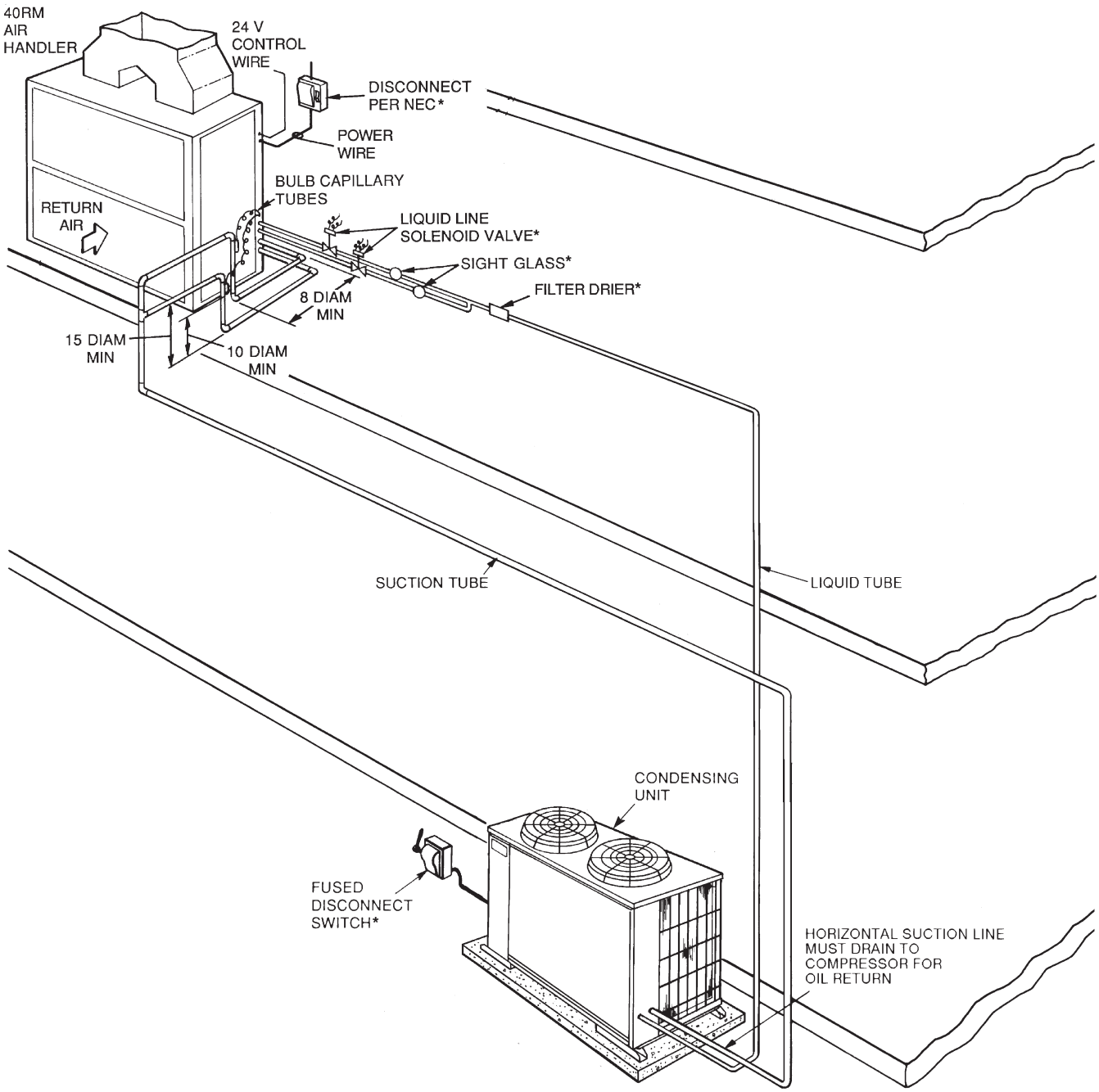

LEGEND

DIAM— Diameter
NEC — National Electrical Code
TXV — Thermostatic Expansion Valve
Piping

*Field supplied.

NOTES:

1. All piping must follow standard refrigerant piping techniques. Refer to Carrier System Design Manual for details.
2. All wiring must comply with the applicable local and national codes.
3. Wiring and piping shown are general points-of-connection guides only and are not intended for, or to include all details for, a specific installation.
4. Liquid line solenoid valve (solenoid drop control) is recommended to prevent refrigerant migration to the compressor.
5. Internal factory-supplied TXVs not shown.

C101130

38AU

TYPICAL PIPING AND WIRING (CONT.)

Dual Condensing Units and a Dual Circuit Fan

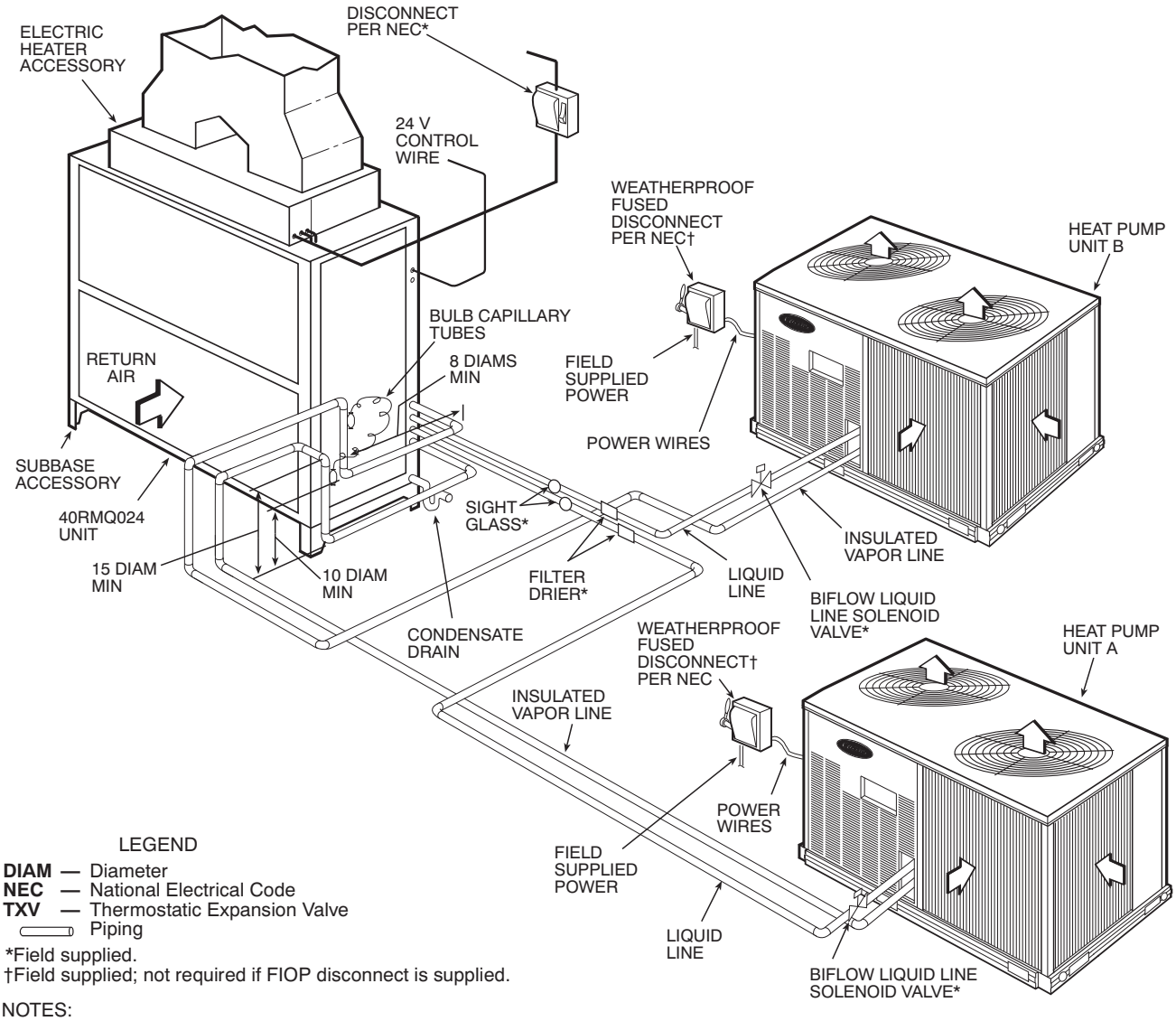

LEGEND

DIAM — Diameter
NEC — National Electrical Code
TXV — Thermostatic Expansion Valve
Piping

*Field supplied.
†Field supplied; not required if FIOP disconnect is supplied.

NOTES:
1. All piping must follow standard refrigerant piping techniques. Refer to Carrier System Design Manual for details.
2. All wiring must comply with applicable local and national codes.
3. Wiring and piping shown are general points-of-connection guides only and are not intended for, or to include all details for, a specific installation.
4. Filter driers must be bi-flow type suited for heat pump duty.
5. Heat Pump Unit A should be the first on, last off and be connected to the lower half of the coil.
6. Internal factory-supplied TXVs and check valves not shown.

C101131

GUIDE SPECIFICATIONS

Commercial Air-Cooled Condensing Units

HVAC Guide Specifications

Size Range: **6 to 20 Tons, Nominal**

Carrier Model Numbers: **38AUZ, Single Circuit (07 - 25 Models) 38AUD, Dual Circuit (12 - 25 Models)**

Part 1 — General

1.01 SYSTEM DESCRIPTION

Outdoor-mounted, air-cooled condensing unit suitable for on-the-ground or rooftop installation. Unit shall consist of a hermetic scroll air-conditioning compressor(s) assembly, an air-cooled coil, propeller-type condenser fans, and a control box. Unit shall discharge supply air upward as shown on contract drawings. Unit shall be used in a refrigeration circuit matched with a packaged air-handling unit.

1.02 QUALITY ASSURANCE

A. Unit shall be rated in accordance with AHRI Standard 360.

B. Unit construction shall comply with ANSI/ASHRAE 15 safety code latest revision and comply with NEC.

C. Unit shall be constructed in accordance with UL 1995 standard and shall carry the UL and UL, Canada label.

D. Unit cabinet shall be capable of withstanding 500-hour salt spray exposure per ASTM B117 (scribed specimen).

E. Air-cooled condenser coils for hermetic scroll compressor units (38AUZ) and 38AUD shall be leak tested at 150 psig, and pressure tested at 650 psig.

F. Unit shall be manufactured in a facility registered to ISO 9001:2000 manufacturing quality standard.

1.03 DELIVERY, STORAGE, AND HANDLING

Unit shall be shipped as single package only, and shall be stored and handled according to unit manufacturer's recommendations.

1.04 WARRANTY (FOR INCLUSION BY SPECIFYING ENGINEER.)

Part 2 — Products

2.01 EQUIPMENT

A. General:

Factory-assembled, single piece, air-cooled condensing unit. Contained within the unit enclosure shall be all factory wiring, piping, controls, compressor, holding charge, and special features required prior to field start-up.

B. Unit Cabinet:

1. Unit cabinet shall be constructed of galvanized steel, bonderized and coated with a prepainted baked enamel finish.
2. A heavy-gauge roll-formed perimeter base rail with forklift slots and lifting holes shall be provided to facilitate rigging.

C. Condenser Fans:

1. Condenser fans shall be direct driven, propeller type, discharging air vertically upward.
2. Fan blades shall be balanced.
3. Condenser fan discharge openings shall be equipped with PVC-coated steel wire safety guards.
4. Condenser fan and motor shaft shall be corrosion resistant.

D. Compressor:

1. Compressor shall be of the hermetic scroll type .
2. Compressor shall be mounted on rubber grommets.
3. Compressors shall include overload protection.
4. Compressors shall be equipped with a crankcase heater.
5. Compressor shall be equipped with internal high pressure and high temperature protection.
6. 38AUZ*16 and 25 sizes shall use two scroll compressors manifold together.

E. Condenser Coils:

1. Standard Aluminum fin - Copper Tube Coils:
   a. Standard evaporator and condenser coils shall have aluminum lanced plate fins mechanically bonded to seamless internally grooved copper tubes with all joints brazed.

b. Evaporator coils shall be leak tested to 150 psig, pressure tested to 450 psig, and qualified to UL 1995 burst test at 1775 psig.

c. Condenser coils shall be leak tested to 150 psig, pressure tested to 650 psig, and qualified to UL 1995 burst test at 1980 psig.

2. Optional Pre-coated aluminum-fin condenser coils:

a. Shall have a durable epoxy-phenolic coating to provide protection in mildly corrosive coastal environments.

b. Coating shall be applied to the aluminum fin stock prior to the fin stamping process to create an inert barrier between the aluminum fin and copper tube.

c. Epoxy-phenolic barrier shall minimize galvanic action between dissimilar metals.

3. Optional Copper-fin evaporator and condenser coils:

a. Shall be constructed of copper fins mechanically bonded to copper tubes and copper tube sheets.

b. Galvanized steel tube sheets shall not be acceptable.

c. A polymer strip shall prevent coil assembly from contacting the sheet metal coil pan to minimize potential for galvanic corrosion between coil and pan.

4. Optional E-coated aluminum-fin evaporator and condenser coils:

a. Shall have a flexible epoxy polymer coating uniformly applied to all coil surface areas without material bridging between fins.

b. Coating process shall ensure complete coil encapsulation of tubes, fins and headers.

c. Color shall be high gloss black with gloss per ASTM D523-89.

d. Uniform dry film thickness from 0.8 to 1.2 mil on all surface areas including fin edges.

e. Superior hardness characteristics of 2H per ASTM D3363-92A and cross-hatch adhesion of 4B-5B per ASTM D3359-93.

f. Impact resistance shall be up to 160 in.-lb (ASTM D2794-93).

g. Humidity and water immersion resistance shall be up to minimum 1000 and 250 hours respectively (ASTM D2247-92 and ASTM D870-92).

h. Corrosion durability shall be confirmed through testing to be no less than 1000 hours salt spray per ASTM B117-90.

5. Standard All Aluminum Novation Coils:

a. Standard condenser coils shall have all aluminum Novation Heat Exchanger Technology design consisting of aluminum multi port flat tube design and aluminum fin. Coils shall be a furnace brazed design and contain epoxy lined shrink wrap on all aluminum to copper connections.

b. Condenser coils shall be leak tested to 150 psig, pressure tested to 650 psig, and qualified to UL 1995 burst test at 1980 psig.

6. Optional E-coated aluminum-fin, aluminum tube condenser coils:

a. Shall have a flexible epoxy polymer coating uniformly applied to all coil external surface areas without material bridging between fins or louvers.

b. Coating process shall ensure complete coil encapsulation, including all exposed fin edges.

c. E-coat thickness of 0.8 to 1.2 mil with top coat having a uniform dry film thickness from 1.0 to 2.0 mil on all external coil surface areas, including fin edges, shall be provided.

d. Shall have superior hardness characteristics of 2H per ASTM D3363-00 and cross-hatch adhesion of 4B-5B per ASTM D3359-02.

e. Shall have superior impact resistance with no cracking, chipping or peeling per NSF/ANSI 51-2002 Method 10.2.

F. Refrigeration Components:

Refrigeration circuit components shall include liquid line service valve, suction line service valve, a full charge of compressor oil, and a partial holding charge of refrigerant.

G. Controls and Safeties:

1. Minimum control functions shall include:

f. Control wire terminal blocks.

g. Compressor lockout on auto-reset safety until reset from thermostat.

h. Each unit shall utilize the Comfort Alert™ Diagnostic Board that provides:

(1.) System Pressure Trip fault code indication

(2.) Short Cycling fault code indication

(3.) Locked Rotor fault code indication

(4.) Open Circuit fault code indication

(5.) Reverse Phase 3 fault code indication
(6.) Welded Contactor fault code indication
(7.) Low Voltage fault code indication
(8.) Anti-short cycle protection
(9.) Phase reversal protection

2. Minimum safety devices which are equipped with automatic reset (after resetting first at thermostat), shall include:
   a. High discharge pressure cutout.
   b. Low pressure cutout.

H. Operating Characteristics:

1. The capacity of the condensing unit shall meet or exceed _____ Btuh at a suction temperature of _____°F. The power consumption at full load shall not exceed _____ kW.
2. The combination of the condensing unit and the evaporator or fan coil unit shall have a total net cooling capacity of _____ Btuh or greater at conditions of _____ cfm entering-air temperature at the evaporator at _____°F wet bulb and _____°F dry bulb, and air entering the condensing unit at _____°F.
3. The system shall have an EER of _____ Btuh/Watt or greater at standard AHRI conditions.
4. Standard unit shall be capable to operate up to 125°F (52°C) and down to 40°F (4°C)

I. Electrical Requirements:

1. Nominal unit electrical characteristics shall be _____ v, 3-ph, 60 Hz. The unit shall be capable of satisfactory operation within voltage limits of ____ v to _____ v.
2. Unit electrical power shall be single-point connection.
3. Unit control circuit shall contain a 24-v transformer for unit control.

J. Special Features:

1. Low-Ambient Temperature Control:
   A low-ambient temperature control shall be available as a factory-installed option or as a field-installed accessory. This low-ambient control shall regulate speed of the condenser-fan motors in response to the saturated condensing temperature of the unit. The control shall maintain correct condensing pressure at outdoor temperatures down to –20°F (-29°C).
2. Unit-Mounted, Non-Fused Disconnect Switch:
   Switch shall be factory-installed and internally mounted. NEC and UL-approved non-fused switch shall provide unit power shutoff. Switch shall be accessible from outside the unit and shall provide power off lockout capability. Non-fused disconnect switch cannot be used when unit MOCP electrical rating exceeds 80 amps.
3. Convenience Outlet:
   Outlet shall be factory-installed and internally mounted with easily accessible 115-v female receptacle. Outlet shall include 15 amp GFI (ground fault interrupter) receptacle with independent fuse protection. Voltage required to operate convenience outlet shall be provided by a factory-installed step-down transformer. Outlet shall be accessible from outside the unit.
4. Thermostat Controls:
   a. Programmable multi-stage thermostat shall have 7-day clock, holiday scheduling, large backlit display, remote sensor capability, and Title 24 compliance.
   b. Commercial Electronic Thermostat shall have 7-day time clock, auto-changeover, multi-stage capability, and large LCD (liquid crystal display) temperature display.
5. Louvered hail Guard Package:
   Louvered hail guard package shall protect coils against damage from hail and other flying debris.
6. Condenser Coil Grille (Novation coil models 07-14):
   Grille shall add decorative appearance to unit and protect condenser coil from large objects and vandalism.

Copyright 2011 Carrier Corp. ● 7310 W. Morris St. ● Indianapolis, IN 46231 Printed in U.S.A. Edition Date: 03/11 **Catalog No: 38AU–04PD**

Manufacturer reserves the right to change, at any time, specifications and designs without notice and without obligations. Replaces: 38AU–03PD