40RUA/40RUS
6 to 30 Ton Direct Expansion
7.5 to 30 Ton Chilled Water
Packaged Air–Handling Units

Carrier®
Turn to the Experts.℠

Product Data

C09035

40RU07 – 12

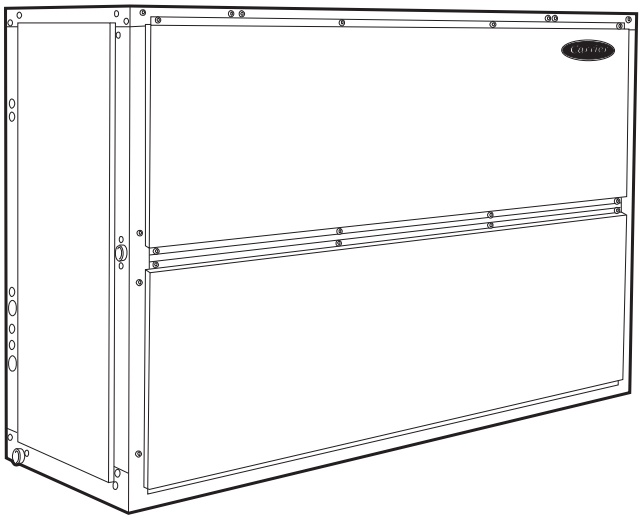

C09036

40RU14 – 30

Puron™
the environmentally sound refrigerant

Carrier's versatile packaged air-handling units satisfy design requirements with:

- Multi-position design for horizontal or vertical installation without modification.
- Standard sloped drain pans and cleanable insulation treated with Environmental Protection Agency (EPA) registered antimicrobial agent improve indoor air quality.
- High-static design meets a wider range of applications than competitive packaged air handler lines.
- Economizer accessory provides ventilation air and "free" cooling.
- Cooling coils with mechanically bonded fins provide peak heat transfer.
- Hot water coil, steam coil, and electric heat accessories are available.
- Standard factory-installed thermo-static expansion valves (TXV) with removable power element on 40RUA units.
- Die-formed galvanized steel casings provide durability and structural integrity. Optional paint is available.

FEATURES/BENEFITS

Easy-to-install and economical 40RU units provide reliable service.

The 40RU Series air-handling units are the best choice for packaged air handlers. Model 40RUA units have direct-expansion coils. All models offer excellent fan performance, a unique combination of indoor air quality features, easy installation, and affordable prices. Their versatility and state-of-the-art features will provide economical performance now and in the future.

Indoor air quality features

The unique combination of features in the 40RU Series air handlers ensures that clean, fresh, conditioned air is delivered to the occupied space.

Cooling coils prevent the build-up of humidity in the room, even during part-load conditions. Unit sizes of 10 tons and above feature dual-circuit face-split coils.

Two-inch (51-mm) disposable filters remove dust and airborne particles from the occupied space.

Thermal insulation contains an immobilized anti-microbial agent to inhibit the growth of bacteria and fungi. The anti-microbial agent is registered with the U.S. Environmental Protection Agency (EPA).

Pitched drain pan can be adjusted for a right-hand or left-hand connection to provide positive drainage and prevent standing condensate.

Accessory economizer can provide ventilation air to improve indoor air quality. When used with CO_2 sensors, the economizer admits fresh outdoor air to replace stale, recirculated indoor air.

Accessory UV-C germicidal lamps can eliminate foul odors that result from the growth of mold and fungus on evaporator coil and condensate pan surfaces.

Economy

The 40RU Series packaged air handlers have low initial costs, and they continue to save money by providing reduced installation expense and energy-efficient performance.

Quick installation is ensured by the multi-position design. Units can be installed in either the horizontal or vertical (upflow) configuration without modifications. All units have drain-pan connections on both sides, and pans can be pitched for right-hand or left hand operation with a simple adjustment.

Fan motors and contactors are pre-wired and TXVs are factory-installed on 40RU models.

High-efficiency, precision balanced fans minimize air turbulence, surging, and unbalanced operation, thereby cutting operating expenses.

Economizer accessory precisely controls the blend of outdoor air and room air to achieve comfort levels. When the outside air enthalpy is suitable, outside air dampers can fully open to provide “free” cooling.

Rugged dependability

Die-formed galvanized steel panels ensure structural integrity under all operating conditions. Mechanically bonded coil fins provide improved heat transfer. Galvanized steel fan housings are securely mounted to a die-formed galvanized steel deck.

Rugged pillow-block bearings (14 thru 30 size) are securely fastened to the solid steel fan shaft with split collets and clamp locking devices. Smaller unit sizes have spider-type bearings.

Coil flexibility

Model 40RU air handling units have galvanized steel casings; inlet and outlet connections are on the same end.

Chilled water coils have 1/2-in. (12.7mm) diameter copper tubes mechanically bonded to aluminum sine wave fins. All chilled water coils have non-ferrous headers.

Direct expansion (DX) coils are designed for use with Puron® R-410A refrigerant and have copper tubes mechanically bonded to aluminum sine-wave fins.

Direct-expansion coils include matched, factory-installed thermostatic expansion valves (TXVs) with matching distributor nozzles.

Easier installation and service

The multi-position design and component layout allow for quick unit installation and operation. The DX coils have factory-installed TXVs with matching distributor nozzles. Units can be converted from horizontal to vertical operation by simply repositioning the unit.

Drain pan connections are duplicated on both sides of the unit. The filters, motor, drive, TXVs, and coil connections are easily accessed by removing a single side panel.

TABLE OF CONTENTS

PAGE

FEATURES AND BENEFITS 1

MODEL NUMBER NOMENCLATURE 3

PHYSICAL DATA 4

OPTIONS AND ACCESSORIES 8

DIMENSIONS 10

SELECTION PROCEDURE 24

PERFORMANCE DATA 25

ELECTRICAL DATA 37

TYPICAL PIPING AND WIRING 43

TYPICAL CONTROL WIRING SCHEMATIC 46

APPLICATION DATA 47

GUIDE SPECIFICATIONS 53

MODEL NUMBER NOMENCLATURE

1	2	3	4	5	6	7	8	9	10	11	12	13	14	15	16	17	18
4	0	R	U	A	A	1	4	A	1	A	6	–	0	A	0	A	0

Model Type
40RU = Carrier Fan Coil
Puron® R–410A Refrigerant

Type of Coil
A = Standard DX Coil (4 row)
S = Chilled Water Coil

Refrigerant Options
A = None

Nominal Tonnage
07 = 6 Tons (40RUA only)
08 = 7.5 Tons
10 = 8.5 Tons (40RUS only)
12 = 10 Tons
14 = 12.5 Tons
16 = 15 Tons
25 = 20 Tons
28 = 25 Tons
30 = 30 Tons

Factory Assigned
A = Standard

Indoor Fan Options
1 = Standard Motor / Standard Drive
2 = Standard Motor/Medium Drive
3 = High Motor / High Drive**

Coil Options
A = Al/Cu Standard 4 row coil

Voltage*
1 = 575–3–60
3 = 208/230–1–60 (07 and 08 Only)
5 = 208/230–3–60 (Size 16 w/High Static Motor Only)
6 = 208/230/460–3–60 (Triple voltage for sizes 07–14 and 16 with standard motor

Revision Number
– = Catalog Model Number

Future Use
0 = Standard

Future Use
A = Standard

Cabinet Paint
0 = None
1 = Painted Cabinet

Future Use
A = Standard

Packaging
0 = Standard

Notes:
* All 40RU*07 through 14 units with a “6” voltage designation are triple voltage; ie., 208/230/460–3–60. Size 40RU*16 is also triple voltage in the “6” configuration unless the High Static motor option is used that is discrete 460–3–60.
** 30 size models and single–phase 07, 08 and 10 sizes designate standard motor and high static drive.

PHYSICAL DATA

40RUA – English

UNIT 40RUA	07	08	12	14	16	25	28	30
NOMINAL CAPACITY (Tons)	6	$7^1/_2$	10	$12^1/_2$	15	20	25	30
OPERATING WEIGHT (lb)								
Base Unit with TXV (4 Row)	399	404	425	695	713	730	1050	1062
Plenum	175	175	175	225	225	225	325	325
Economizer	185	185	185	340	340	340	340	340
Hot Water Coil	195	195	195	285	285	285	345	345
Steam Coil	215	215	215	340	340	340	405	405
FANS								
Qty...Diam. (in.)	1...15	1...15	1...15	2...15	2...15	2...15	2...18	2...18
Nominal Airflow (cfm)	2400	3000	4000	5000	6000	8000	10,000	12,000
Airflow Range (cfm)	1800-3000	2250-3750	3000-5000	3750-6250	4500-7500	6000-10,000	7500-12,500	9000-15,000
Nom. Motor Hp (Standard Motor)*								
208/230-1-60	1.3	2.4	—	—	—	—	—	—
208/230-3-60 and 460-3-60	2.4	2.4	2.4	2.9	3.7	5.0	7.5	10.0
575-3-60	1.0	2.0	2.0	3.0	3.0	5.0	7.5	10.0
230-3-50, 400-3-50	2.4	2.4	2.9	2.9	2.9	5.0	7.5	10.0
Motor Speed (rpm)								
208/230-1-60	1725	1725	—	—	—	—	—	—
208/230-3-60 and 460-3-60	1725	1725	1725	1725	1725	1745	1745	1745
575-3-60	1725	1725	1725	1725	1725	1745	1755	1755
230-3-50, 400-3-50	1425							
REFRIGERANT	Puron (R-410A)							
Operating charge (lb) (approx per circuit)†	3.0	3.0	1.5/1.5	2.0/2.0	2.5/2.5	3.5/3.5	4.5/4.5	5.0/5.0
DIRECT-EXPANSION COIL	Enhanced Copper Tubes, Aluminum Sine-Wave Fins							
Max Working Pressure (psig)	435							
Face Area (sq ft)	6.67	8.33	10.01	13.25	17.67	19.88	24.86	29.83
No. of Splits	1	1	2	2	2	2	2	2
Split Type...Percentage	—	—	Face...50/50					
No. of Circuits per Split	12	15	9	12	16	18	20	24
Fins/in.	15	15	17	15	15	17	15	15
STEAM COIL								
Max Working Press. (psig at 260°F)	20							
Total Face Area (sq ft)	6.67	6.67	6.67	13.33	13.33	13.33	15.0	15.0
Rows...Fins/in.	1...9	1...9	1...9	1...10	1...10	1...10	1...10	1...10
HOT WATER COIL								
Max Working Pressure (psig)	150							
Total Face Area (sq ft)	6.67	6.67	6.67	13.33	13.33	13.33	15.0	15.0
Rows...Fins/in.	2...8.5	2...8.5	2...8.5	2...8.5	2...8.5	2...8.5	2...12.5	2...12.5
Water Volume								
(gal)	8.3			13.9			14.3	
(ft^3)	1.1			1.85			1.90	
PIPING CONNECTIONS**								
Quantity...Size (in.)								
DX Coil — Suction (ODF)	1...$1^1/_8$	1...$1^1/_8$	2...$1^1/_8$	2...$1^1/_8$	2...$1^1/_8$	2...1 $^1/_8$	2...$1^3/_8$	2...$1^3/_8$
DX Coil — Liquid Refrig, (ODF)	1...$^5/_8$		2...$^5/_8$					
Steam Coil, In (MPT)	1...$2^1/_2$		1...$2^1/_2$					
Steam Coil, Out (MPT)	1...$1^1/_2$		1...$1^1/_2$					
Hot Water Coil, In (MPT)	1...$1^1/_2$		1...$1^1/_2$	1...2				
Hot Water Coil, Out (MPT)	1...$1^1/_2$		1...$1^1/_2$	1...2				
Condensate (PVC)	1...$1^1/_4$ ODM/1 IDF							
FILTERS	Throwaway — Factory-Supplied							
Quantity...Size (in.)	4...16 x 24 x 2			4...16 x 20 x 2 4...16 x 24 x 2			4...20 x 24 x 2 4...20 x 25 x 2	
Access Location	Right or Left Side							

* Refer to Alternate Fan Motor Data table, page 38, for alternate motor data.
† Units are shipped without refrigerant charge.
** All piping sizes are OD inches; equivalent sizes in millimeters follow:

in	mm
$^5/_8$	15.9
$1^1/_8$	28.6
$1^1/_2$	38.7
2	50.8
$2^1/_2$	63.5

PHYSICAL DATA (cont.)

40RUA – SI

UNIT 40RUA	07	08	12	14	16	25	28	30
NOMINAL CAPACITY (kW)	21	26	35	43	52	70	87	105
OPERATING WEIGHT (kg)								
Base Unit with TXV (4 Row)	181	183	193	315	323	331	470	482
Plenum	80	80	80	102	102	102	148	148
Economizer	84	84	84	155	155	155	205	205
Hot Water Coil	89	89	89	130	130	130	157	157
Steam Coil	98	98	98	155	155	155	184	184
FANS								
Qty...Diam. (mm)	1...381	1...381	1...381	2...381	2...381	2...381	2...457	2...457
Nominal Airflow (L/s)	1133	1604	1888	2360	2831	3775	4719	5663
Airflow Range (L/s)	850-1416	1203-2006	1416-2360	1770-2949	2124-3539	2831-4719	3539-5899	4247-7079
Nominal Motor kW (Standard Motor)*								
208/230-1-60	0.97	1.79	—	—	—	—	—	—
208/230-3-60 and 460-3-60	1.79	1.79	1.79	2.16	2.76	3.73	5.59	7.46
575-3-60	0.75	1.49	1.49	2.24	2.24	3.73	5.59	7.46
230-3-50, 400-3-50	1.79	1.79	2.16	2.16	2.16	3.73	5.59	7.46
Motor Speed (r/s)								
208/230-1-60	28.8	28.8	—	—	—	—	—	—
208/230-3-60 and 460-3-60	28.8	28.8	28.8	28.8	28.8	29.1	29.1	29.1
575-3-60	28.8	28.8	28.8	28.8	28.8	29.1	29.3	29.3
230-3-50, 400-3-50	23.8	23.8	23.8	23.8	23.8	23.8	23.8	23.8
REFRIGERANT	Puron (R–410A)							
Operating charge (kg) (approx per circuit)†	1.36	1.36	0.68/0.68	0.90/0.90	1.13/1.13	1.59/1.59	2.04/2.04	2.27/2.27
DIRECT-EXPANSION COIL	Enhanced Copper Tubes, Aluminum Sine-Wave Fins							
Max Working Pressure (kPag)	2999							
Face Area (sq m)	0.62	0.77	0.93	1.23	1.64	1.85	2.30	2.77
No. of Splits	1	1	2	2	2	2	2	2
No. of Circuits per Split (4 Row)	12	15		12	16	18	20	24
Split Type...Percentage	—	—	Face...50/50					
Fins/m	591	591	670	591	591	670	591	591
STEAM COIL								
Max Working Pressure (kPag at 126°C)	138							
Total Face Area (sq m)	0.62	0.62	0.62	1.24	1.24	1.24	1.39	1.39
Rows...Fins/m	1...355	1...355	1...355	1...394	1...394	1...394	1...394	1...394
HOT WATER COIL								
Max Working Pressure (kPag)	1034							
Total Face Area (sq m)	0.62	0.62	0.62	1.24	1.24	1.24	1.39	1.39
Rows...Fins/m	2...335	2...335	2...335	2...335	2...335	2...335	2...493	2...493
Water Volume								
(L)	31.4			52.6			54.1	
(m^3)	0.031			0.052			0.054	
PIPING CONNECTIONS**								
Quantity...Size (in.)								
DX Coil — Suction (ODF)	1...$1^1/_8$	1...$1^1/_8$	2...$1^1/_8$	2...$1^1/_8$	2...$1^1/_8$	2...$1^1/_8$	2...$1^3/_8$	2...$1^3/_8$
DX Coil — Liquid Refrigerant (ODF)	1...$^5/_8$		2...$^5/_8$					
Steam Coil, In (MPT)	1...$2^1/_2$		1...$2^1/_2$					
Steam Coil, Out (MPT)	1...$1^1/_2$		1...$1^1/_2$					
Hot Water Coil, In (MPT)	1...$1^1/_2$		1...$1^1/_2$	1...2				
Hot Water Coil, Out (MPT)	1...$1^1/_2$		1...$1^1/_2$	1...2				
Condensate (PVC)	1...$1^1/_4$ ODM/1 IDF							
FILTERS	Throwaway — Factory-Supplied							
Quantity...Size	4...406 x 610 x 51			4...406 x 508 x 51 4...406 x 610 x 51			4...508 x 610 x 51 4...508 x 635 x 51	
Access Location	Right or Left Side							

* Refer to Alternate Fan Motor Data table, page 38, for alternate motor data.
† Units are shipped without refrigerant charge.
** All piping sizes are OD inches; equivalent sizes in millimeters follow:

in	mm
$^5/_8$	15.9
$1^1/_8$	28.6
$1^1/_2$	38.7
2	50.8
$2^1/_2$	63.5

PHYSICAL DATA (cont.)

40RUS – English

UNIT 40RUS	08	10	12	14	16	25	28	30
NOMINAL CAPACITY (Tons)	$7^1/_2$	$8^1/_2$	10	$12^1/_2$	15	20	25	30
OPERATING WEIGHT (lb)								
Base Unit	390	391	391	661	677	683	1035	1042
Plenum	175	175	175	225	225	225	325	325
Economizer	185	185	185	340	340	340	450	450
Hot Water Coil	195	195	195	285	285	285	345	345
Steam Coil	215	215	215	340	340	340	405	405
FANS								
Qty...Diam. (in.)	1...15	1...15	1...15	2...15	2...15	2...15	2...18	2...18
Nominal Airflow (cfm)	3000	3400	4000	5000	6000	8000	10,000	12,000
Airflow Range (cfm)	2250-3750	2250-4250	3000-5000	3750-6250	4500-7500	6000-10,000	7500-12,500	9000-15,000
Nominal Motor Hp (Standard Motor)*								
208/230-1-60	2.4	2.4	—	—	—	—	—	—
208/230-3-60 and 460-3-60	2.4	2.4	2.4	2.9	3.7	5.0	7.5	10.0
575-3-60	2.0	2.0	2.0	3.0	3.0	5.0	7.5	10.0
230-3-50, 400-3-50	2.4	2.4	2.9	2.9	2.9	5.0	7.5	10.0
Motor Speed (rpm)								
208/230-1-60	1725	1725	—	—	—	—	—	—
208/230-3-60 and 460-3-60	1725	1725	1725	1725	1725	1745	1745	1745
575-3-60	1725	1725	1725	1725	1725	1745	1755	1755
230-3-50, 400-3-50	1425	1425	1425	1425	1425	1425	1425	1425
CHILLED WATER COIL	Enhanced Copper Tubes, Aluminum Sine-Wave Fins							
Max Working Pressure (psig)	435							
Face Area (sq ft) — Upper	8.3	9.0	9.8	8.3	8.3	11.0	12.4	15.5
Face Area (sq ft) — Lower	—	—	—	5.5	8.3	8.3	12.4	12.4
Rows...Fins/in.	3...15							
Water Volume								
(gal)	3.0	3.3	3.5	4.7	5.6	6.4	8.9	9.9
(ft^3)	0.40	0.47	0.46	0.63	0.75	0.85	1.19	1.32
STEAM COIL								
Max Working Pressure (psig at 260°F)	20							
Total Face Area (sq ft)	6.67	6.67	6.67	13.33	13.33	13.33	15.0	15.0
Rows...Fins/in.	1...9	1...9	1...9	1...10	1...10	1...10	1...10	1...10
HOT WATER COIL								
Max Working Press. (in. wg)	150							
Total Face Area (sq ft)	6.67	6.67	6.67	13.33	13.33	13.33	15.0	15.0
Rows...Fins/in.	2...8.5	2...8.5	2...8.5	2...8.5	2...8.5	2...8.5	2...12.5	2...12.5
Water Volume								
(gal)	8.3			13.9			14.3	
(ft^3)	1.1			1.85			1.90	
PIPING CONNECTIONS†								
Quantity...Size (in.)								
Chilled Water — In	$1...1^3/_8$ ODF	$1...1^3/_8$ ODF	$1...1^3/_8$ ODF	$2...1^3/_8$ ODM	$2...1^3/_8$ ODM	$2...1^3/_8$ ODM	$2...2^1/_8$ ODM	$2...2^1/_8$ ODM
Chilled Water — Out	$1...1^3/_8$ ODF	$1...1^3/_8$ ODF	$1...1^3/_8$ ODF	$2...1^3/_8$ ODM	$2...1^3/_8$ ODM	$2...1^3/_8$ ODM	$2...2^1/_8$ ODM	$2...2^1/_8$ ODM
Steam Coil, In (MPT)	$1...2^1/_2$		$1...2^1/_2$	$1...2^1/_2$				
Steam Coil, Out (MPT)	$1...1^1/_2$		$1...1^1/_2$	$1...1^1/_2$				
Hot Water Coil, In (MPT)	$1...1^1/_2$		$1...1^1/_2$	1...2				
Hot Water Coil, Out (MPT)	$1...1^1/_2$		$1...1^1/_2$	1...2				
Condensate (PVC)	$1...1^1/_4$ ODM/1 IDF							
FILTERS	Throwaway — Factory-Supplied							
Quantity...Size (in.)	4...16 x 24 x 2			4...16 x 20 x 2 4...16 x 24 x 2			4...20 x 24 x 2 4...20 x 25 x 2	
Access Location	Right or Left Side							

* Refer to Alternate Fan Motor Data table, page 38, for alternate motor data.

† All piping sizes are OD inches; equivalent sizes in millimeters follow:

in	mm
$1^3/_8$	34.9
$1^1/_2$	38.7
2	50.8
$2^1/_8$	54.0
$2^1/_2$	63.5

PHYSICAL DATA (cont.)

40RUS – SI

UNIT 40RUS	08	10	12	14	16	25	28	30
NOMINAL CAPACITY (kW)	26	29	35	43	52	70	87	105
OPERATING WEIGHT (kg)								
Base Unit	177	177	177	300	307	310	469	473
Plenum	80	80	80	102	102	102	148	148
Economizer	84	84	84	155	155	130	205	205
Hot Water Coil	89	89	89	130	130	130	157	157
Steam Coil	98	98	98	155	155	155	184	184
FANS								
Qty...Diam. (mm)	1...381	1...381	1...381	2...381	2...381	2...381	2...457	2...457
Nominal Airflow (L/s)	1416	1605	1888	2360	2831	3775	4719	5663
Airflow Range (L/s)	1062-1770	1204-2006	1416-2360	1770-2949	2124-3539	2831-4719	3539-5899	4247-7079
Nominal Motor kW (Standard Motor)*								
208/230-1-60	1.79	1.79	—	—	—	—	—	—
208/230-3-60,460-3-60	1.79	1.79	1.79	2.16	2.76	3.73	5.59	7.46
575-3-60	1.49	1.49	1.49	2.24	2.24	3.73	5.59	7.46
230-3-50, 400-3-50	1.79	1.79	2.16	2.16	2.16	3.73	5.59	7.46
Motor Speed (r/s)								
208/230-1-60	28.8	28.8	—	—	—	—	—	—
208/230-3-60, 460-3-60	28.8	28.8	28.8	28.8	28.8	29.1	29.1	29.1
575-3-60	28.8	28.8	28.8	28.8	28.8	29.1	29.3	29.3
230-3-50, 400-3-50	23.8	23.8	23.8	23.8	23.8	23.8	23.8	23.8
CHILLED WATER COIL								
Max Working Pressure (kPag)	2999							
Face Area (sq m) — Upper	0.77	0.84	0.91	0.77	0.77	1.02	1.15	1.44
Face Area (sq m) — Lower	—	—	—	0.51	0.77	0.77	1.15	1.15
Rows...Fins/m	3...591	3...591	3...591	3...591	3...591	3...591	3...591	3...591
Water Volume								
(L)	11.4	12.5	13.2	17.8	21.2	24.2	33.7	37.5
(m^3)	0.011	0.013	0.013	0.018	0.021	0.024	0.032	0.037
STEAM COIL								
Max Working Pressure (kPag at 126°C)	138							
Total Face Area (sq m)	0.62	0.62	0.62	1.24	1.24	1.24	1.39	1.39
Rows...Fins/m	1...355	1...355	1...355	1...355	1...394	1...394	1...394	1...394
HOT WATER COIL								
Max Working Pressure (kPag)	1034							
Total Face Area (sq m)	0.62	0.62	0.62	1.24	1.24	1.24	1.39	1.39
Rows...Fins/m	2...335	2...335	2...335	2...335	2...335	2...335	2...493	2...493
Water Volume								
(L)	31.4			52.6			54.1	
(m^3)	0.031			0.052			0.054	
PIPING CONNECTIONS†								
Quantity...Size (in.)								
Chilled Water — In	1...$1^3/_8$ ODF	1...$1^3/_8$ ODF	2...$1^3/_8$ ODF	2...$1^3/_8$ ODM	2...$1^3/_8$ ODM	2...$1^3/_8$ ODM	2...$2^1/_8$ ODM	2...$2^1/_8$ ODM
Chilled Water — Out	1...$1^3/_8$ ODF	1...$1^3/_8$ ODF	2...$1^3/_8$ ODF	2...$1^3/_8$ ODM	2...$1^3/_8$ ODM	2...$1^3/_8$ ODM	2...$2^1/_8$ ODM	2...$2^1/_8$ ODM
Steam Coil, In (MPT)	1...$2^1/_2$		1...$2^1/_2$	1...$2^1/_2$				
Steam Coil, Out (MPT)	1...$1^1/_2$		1...$1^1/_2$	1...$1^1/_2$				
Hot Water Coil, In (MPT)	1...$1^1/_2$		1...$1^1/_2$	1...2				
Hot Water Coil, Out (MPT)	1...$1^1/_2$		1...$1^1/_2$	1...2				
Condensate (PVC)	1...$1^1/_4$ ODM/1 IDF							
FILTERS	Throwaway — Factory-Supplied							
Quantity...Size (mm)	4...406 x 610 x 51			4...406 x 508 x 51 4...406 x 610 x 51			4...508 x 610 x 51 4...508 x 635 x 51	
Access Location	Right or Left Side							

* Refer to Alternate Fan Motor Data table, page 38,for alternate motor data.

† All piping sizes are OD inches; equivalent sizes in millimeters follow:

in	mm
$1^3/_8$	34.9
$1^1/_2$	38.7
2	50.8
$2^1/_8$	54.0
$2^1/_2$	63.5

OPTIONS AND ACCESSORIES

ITEM	OPTION*	ACCESSORY†
Alternate Fan Motors	X	
Alternate Drives	X	
CO_2 Sensors		X
Condensate Drain Trap		X
Discharge Plenum		X
Economizer		X
Electric Heat		X
Hot Water Heating Coils		X
Overhead Suspension Package		X
Prepainted Units	X	
Programmable Thermostats		X
Return Air Grille		X
Steam Heating Coil		X
Subbase		X
UV–C Germicidal Lamp**		X

* Factory–installed option.
† Field–installed accessory
** Contact Application Engineer

Factory-installed options

Alternate fan motors and drives are available to provide the widest possible range of performance.

Prepainted steel units are available from the factory for applications that require painted units. Units are painted with American Sterling Gray color.

Field-installed accessories

Two-row hot water coils have copper tubes mechanically bonded to aluminum plate fins and non-ferrous headers.

One-row steam coil has copper tubes and aluminum fins. The Inner Distributing Tube (IDT) design provides uniform temperatures across the coil face. The steam coil has a broad operating pressure range; up to 20 psi (138 kPag) at 260°F (126°C). The IDT steam coils are especially suited to applications where sub-freezing air enters the unit.

Electric resistance heat coils have an open-wire design and are mounted in a rigid frame. Safety cutouts for high temperature conditions are standard. Terminal block for single-point power connection is included.

Economizer (enthalpy controlled) provides ventilation air and "free" cooling if outside ambient temperature and humidity are suitable. It can also be used with CO_2 sensors to help meet indoor air quality requirements.

Discharge plenum directs the air discharge directly into the occupied space; integral horizontal and vertical louvers enable redirection of airflow. Accessory is available unpainted or painted. Field assembly is required (only applicable for vertical application).

Return-air grille provides a protective barrier over the return-air opening and gives a finished appearance to units installed in the occupied space. Accessory is available unpainted or painted.

Subbase provides a stable, raised platform and room for condensate drain trap connection for vertical floor-mounted units. Accessory is available unpainted or painted.

Overhead suspension package includes necessary brackets to support units in horizontal ceiling installations.

CO_2 sensors can be used in conjunction with the economizer accessory to help meet indoor air quality requirements. The sensor signals the economizer to open when the CO_2 level in the space exceeds the set point. A Carrier Comfort System programmable thermostat can be used to override the sensor if the outside-air temperature is too high or too low.

Carrier's line of thermostats provide both programmable and non-programmable capability with the new Debonair® line of commercial programmable thermostats. The TEMP System controls offer communication capability with staged heating and cooling, and the Commercial Electronic thermostats provide 7-day programmable capability for economical applications.

Condensate drain trap includes an overflow shutoff switch that can be wired to turn off the unit if the trap becomes plugged. Kit also includes a wire harness that can be connected to an alarm if desired. The transparent trap is designed for easy service and maintenance.

UV-C germicidal lamps inhibit the growth of mold and fungus, which may grow on evaporator coil and condensate pan surfaces. The use of UV-C germicidal lamps reduces the foul odors that may result from this growth of mold and fungus. It also provides a self-cleaning function for the evaporator coil and drain pan.

OPTIONS AND ACCESSORIES (cont.)

40RU WITH DISCHARGE PLENUM
RETURN-AIR GRILLE AND SUBBASE

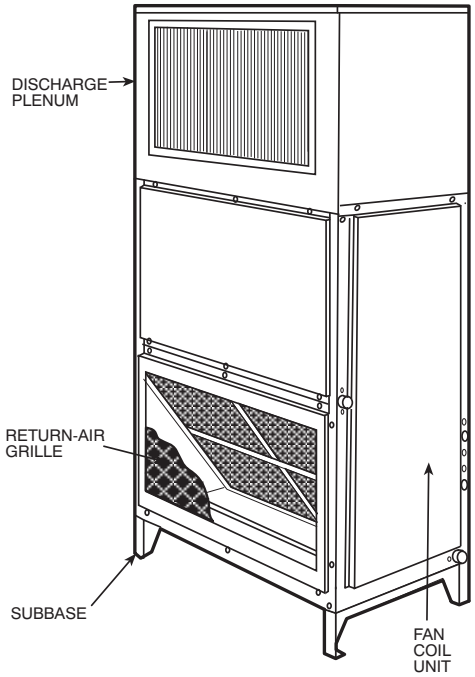

40RU WITH HOT WATER OR STEAM COIL

40RU WITH ECONOMIZER
AND UV-C GERMICIDAL LAMPS

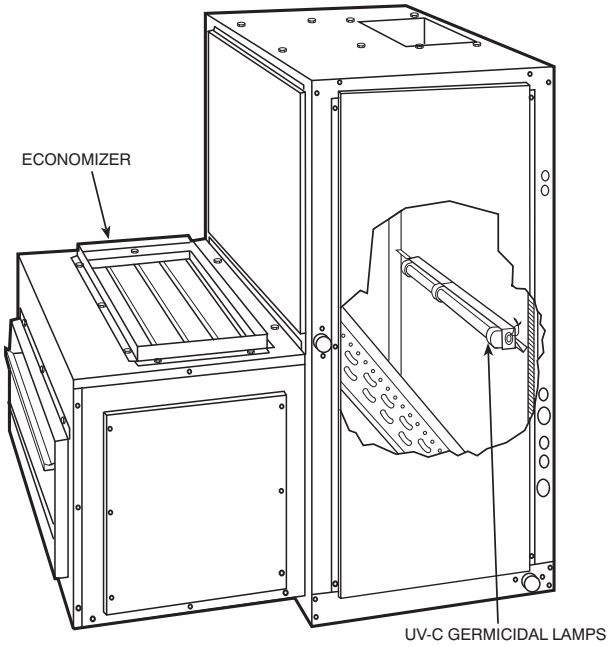

40RU WITH CONDENSATE TRAP

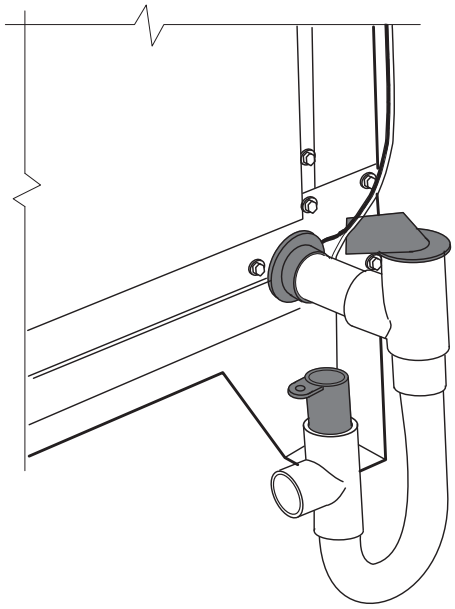

C09038

40RU

DIMENSIONS

NOTES:
1. DIMENSIONS IN [ ] ARE IN MILLIMETERS.
2. DIRECTIONS OF AIRFLOW.
3. RECOMMENDED CLEARANCE:
   REAR: 3 IN. [76 mm]
   FRONT: 2 ft 6 in. [762 mm]
   RIGHT SIDE: 2 ft 6 in. [762 mm]
   LEFT SIDE: 2 ft 6 in. [762 mm]
   LOCAL CODES OR JURISDICTION MAY PREVAIL.
4. LIQUID PIPING NOT SUPPLIED BY CARRIER.
5. DUCT FLANGE IS FACTORY SUPPLIED AND FIELD INSTALLED.

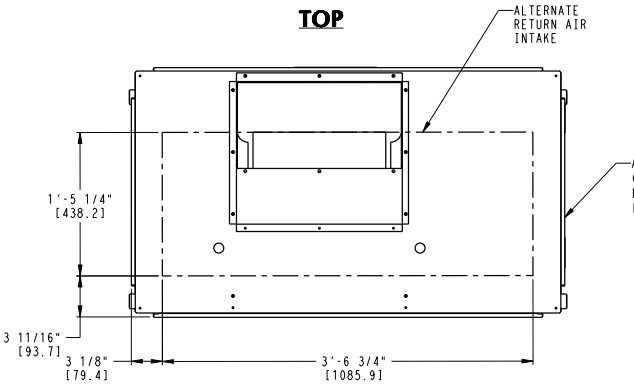

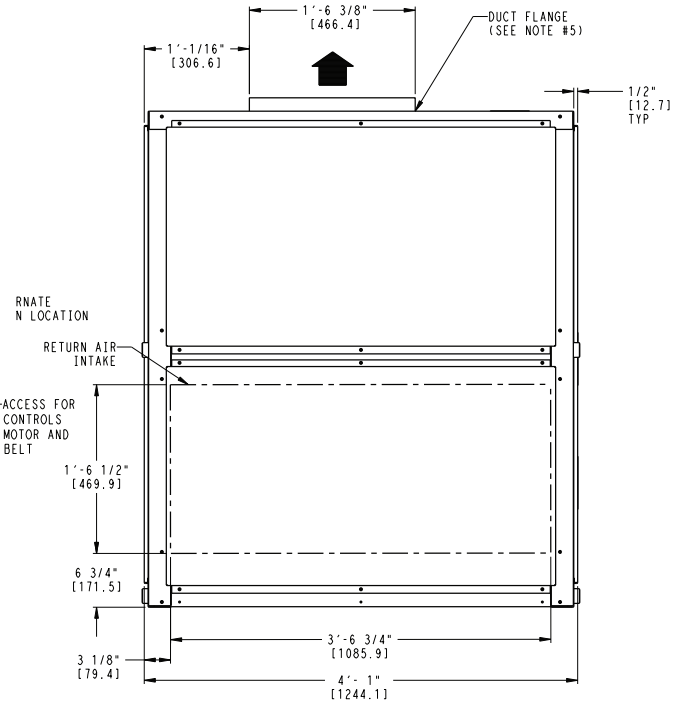

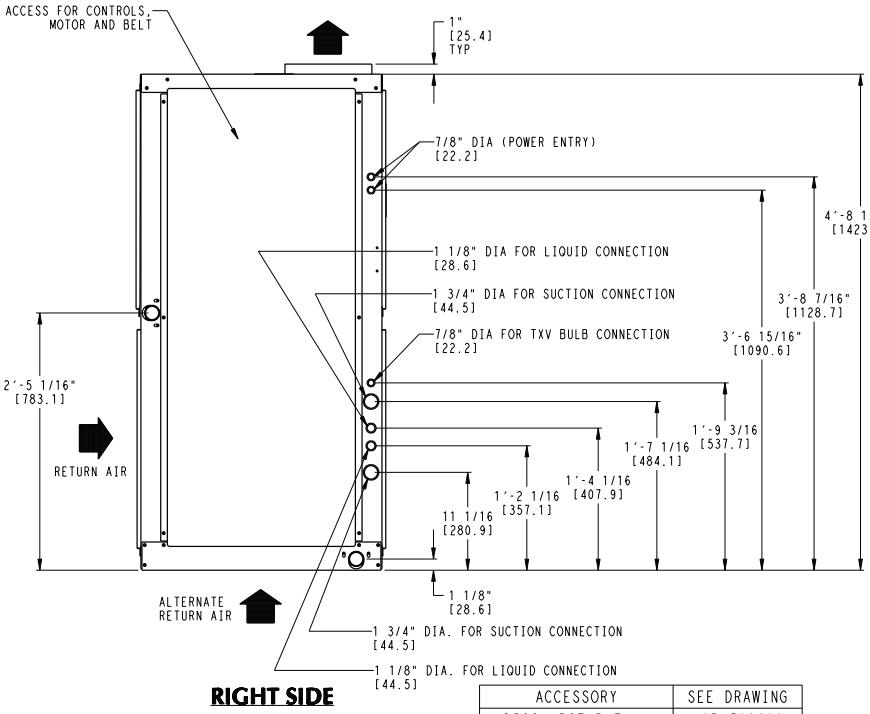

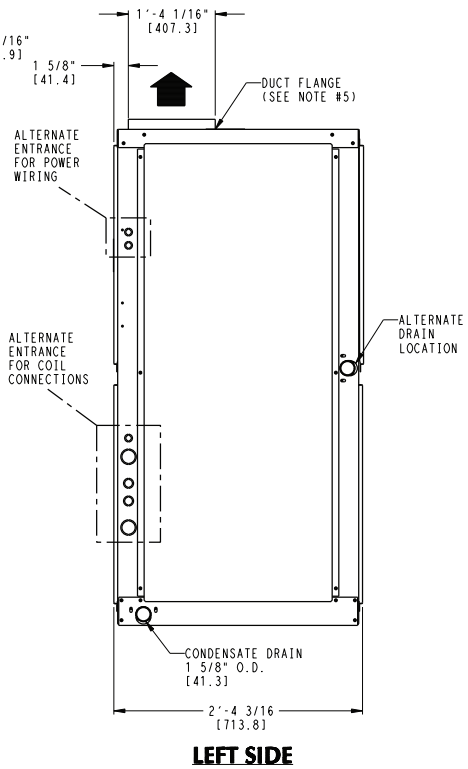

UNIT	UNIT WEIGHT (W/TXV)
40RUA-07	399 lbs [181 kg]
40RUA-08	404 lbs [183 kg]
40RUA-12	425 lbs [193 kg]
40RUQ-07	381 lbs [173 kg]
40RUS-08	390 lbs [177 kg]
40RUS-10	391 lbs [177 kg]
40RUS-12	391 lbs [177 kg]

ACCESSORY	SEE DRAWING
DISCHARGE PLENUM	40RM500996
ECONOMIZER	40RM500999
STEAM COIL	40RM500999
HOT WATER COIL	40RM500999
RETUNR AIR GRILLE	40RM500996
OVERHEAD SUSPENSION	40RM500996
SUBBASE	40RM500996
ELECTRIC HEAT ◪	40RM501002

◪ UNRELEASED DATA

C09060

40RU*07-12

DIMENSIONS (cont.)

NOTES:
1. DIMENSIONS IN [ ] ARE IN MILLIMETERS.
2. DIRECTIONS OF AIRFLOW.
3. RECOMMENDED CLEARANCE:
   REAR: 3 in. [76 mm]
   FRONT: 2 ft 6 in. [762 mm]
   RIGHT SIDE: 2 ft 6 in. [762 mm]
   LEFT SIDE: 2 ft 6 in. [762 mm]
   LOCAL CODES OR JURISDICTION MAY PREVAIL.
4. LIQUID PIPING NOT SUPPLIED BY CARRIER.
5. DUCT FLANGE IS FACTORY SUPPLIED AND FIELD INSTALLED.

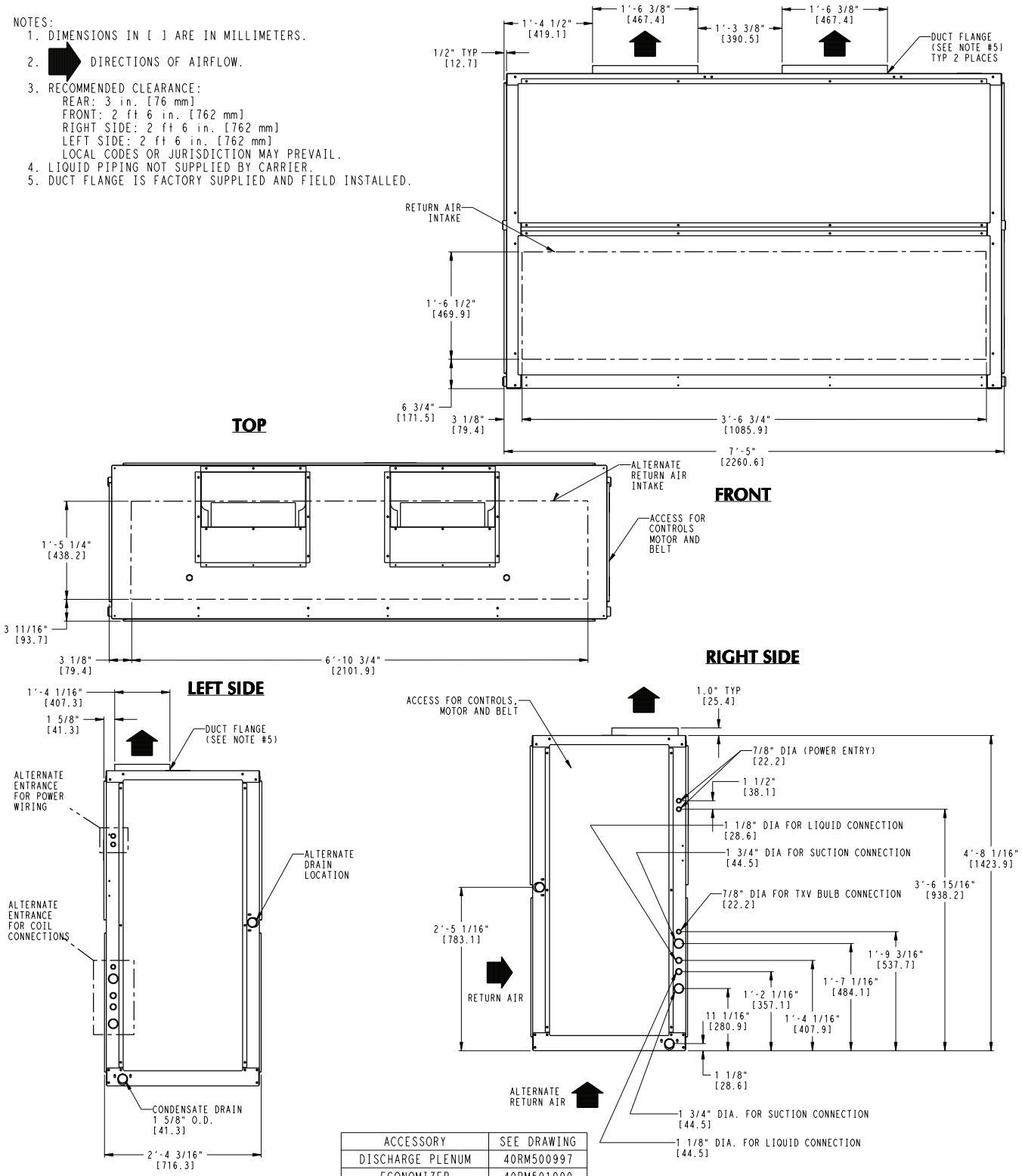

UNIT	UNIT WEIGHT (W/TXV)
40RUA-14	695 lbs [315 kg]
40RUA-16	713 lbs [323 kg]
40RUA-25	730 lbs [331 kg]
40RUS-14	661 lbs [300 kg]
40RUS-16	677 lbs [307 kg]
40RUS-25	683 lbs [310 kg]

ACCESSORY	SEE DRAWING
DISCHARGE PLENUM	40RM500997
ECONOMIZER	40RM501000
STEAM COIL	40RM501000
HOT WATER COIL	40RM501000
RETUNR AIR GRILLE	40RM500997
OVERHEAD SUSPENSION	40RM500997
SUBBASE	40RM500997
ELECTRIC HEAT ◪	40RM501002

◪ UNRELEASED DATA

C09483

40RU*14 - 25

40RU

DIMENSIONS (cont.)

NOTES:
1. DIMENSIONS IN [ ] ARE IN MILLIMETERS.
2. ➡ DIRECTIONS OF AIRFLOW.
3. RECOMMENDED CLEARANCE:
   REAR: 3 in. [76 mm]
   FRONT: 2 ft 6 in. [762 mm]
   RIGHT SIDE: 2 ft 6 in [762 mm]
   LEFT SIDE: 2 ft 6 in [762 mm]
   LOCAL CODES OR JURISDICTION MAY PREVAIL.
4. LIQUID PIPING NOT SUPPLIED BY CARRIER.
5. DUCT FLANGE IS FACTORY SUPPLIED AND FIELD INSTALLED.

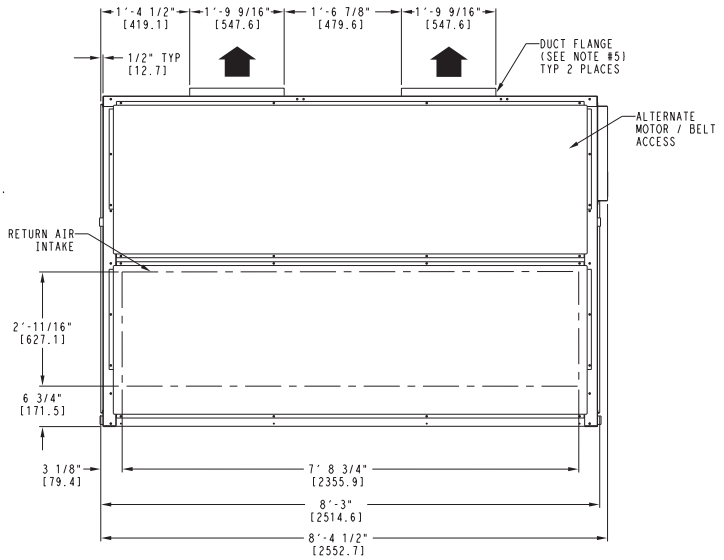

FRONT

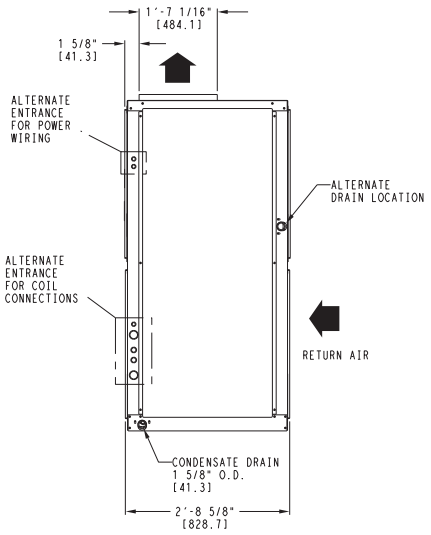

LEFT SIDE

TOP

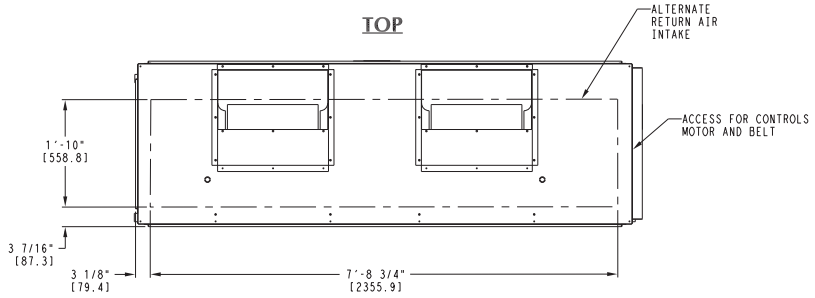

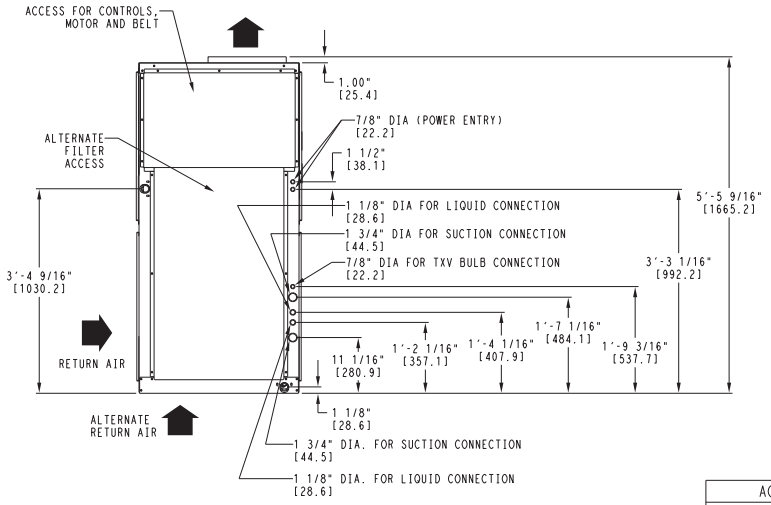

RIGHT SIDE

UNIT	UNIT WEIGHT (W/TXV)
40RUA-28	1050 lbs [477 kg]
40RUA-30	1062 lbs [482 kg]
40RUS-28	1035 lbs [469 kg]
40RUS-30	1042 lbs [473 kg]

ACCESSORY	SEE DRAWING
DISCHARGE PLENUM	40RM500998
ECONOMIZER	40RM501001
STEAM COIL	40RM501001
HOT WATER COIL	40RM501001
RETUNR AIR GRILLE	40RM500998
OVERHEAD SUSPENSION	40RM500998
SUBBASE	40RM500998
ELECTRIC HEAT ◪	40RM501002

◪ UNRELEASED DATA

C09484

40RU*28, 30

CORNER WEIGHTS
HORIZONTAL POSITION

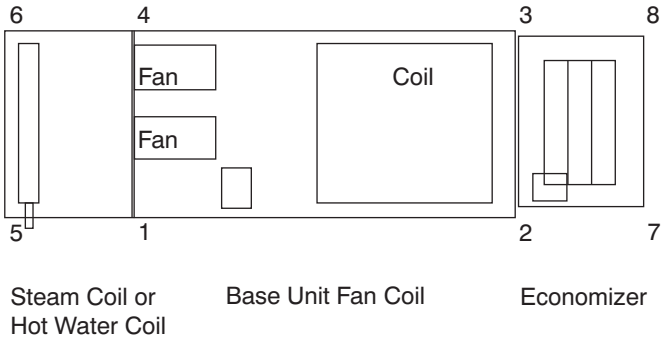

C09039

40RU – English

40RU UNIT SIZE	UNIT OR ACCESSORY NAME		UNIT OR ACCESSORY WEIGHT (lb)	CORNER NUMBER (WEIGHT IN LB)							
				1	2	3	4	5	6	7	8
40RUA07	FAN COIL BASE UNIT		399	109.3	106.1	90.6	93.4	—	—	—	—
40RUA08	FAN COIL BASE UNIT		404	110.7	107.5	91.7	94.5	—	—	—	—
40RUS08	FAN COIL BASE UNIT		390	106.9	103.8	88.5	90.8	—	—	—	—
40RUS10	FAN COIL BASE UNIT		391	107.2	104.1	88.7	91.0	—	—	—	—
40RUA12	FAN COIL BASE UNIT		425	116.4	113.0	96.5	99.4	—	—	—	—
40RUS12	FAN COIL BASE UNIT		391	107.2	104.1	88.7	91.0	—	—	—	—
40RUA (07 – 12) 40RUS (08 – 12)	STEAM COIL	ADD	215	40.2	0.0	0.0	40.6	66.5	67.5	0.0	0.0
	HOT WATER COIL	ADD	195	35.9	0.0	0.0	36.7	60.4	62.0	0.0	0.0
	ECONOMIZER	ADD	185	0.0	36.8	35.7	0.0	0.0	0.0	56.8	55.1
	ECO + STEAM COIL	ADD	400	38.8	38.6	37.4	39.2	64.2	65.2	59.5	57.7
	ECO + HW COIL	ADD	380	36.9	35.8	34.6	37.7	62.1	63.8	55.1	53.4
40RUA14	FAN COIL BASE UNIT		695	224.0	177.7	129.8	163.7	—	—	—	—
40RUS14	FAN COIL BASE UNIT		661	213.1	169.0	123.5	155.4	—	—	—	—
40RUA16	FAN COIL BASE UNIT		713	229.8	182.3	133.2	167.9	—	—	—	—
40RUS16	FAN COIL BASE UNIT		677	218.2	173.1	126.5	159.2	—	—	—	—
40RUA25	FAN COIL BASE UNIT		730	235.6	186.4	136.5	171.5	—	—	—	—
40RUS25	FAN COIL BASE UNIT		683	220.0	174.8	127.7	160.5	—	—	—	—
40RUA/S (14 – 25)	STEAM COIL	ADD	340	61.4	0.0	0.0	62.0	107.8	108.8	0.0	0.0
	HOT WATER COIL	ADD	285	51.7	0.0	0.0	51.3	91.5	90.6	0.0	0.0
	ECONOMIZER	ADD	340	0.0	66.9	62.0	0.0	0.0	0.0	109.8	102.0
	ECO + STEAM COIL	ADD	680	64.4	63.7	59.0	65.0	113.0	114.1	104.5	97.1
	ECO + HW COIL	ADD	625	60.0	57.6	53.4	59.5	106.2	105.1	94.6	87.8
40RUA28	FAN COIL BASE UNIT		1050	338.4	268.5	196.1	247.2	—	—	—	—
40RUS28	FAN COIL BASE UNIT		1035	333.6	264.6	193.3	243.3	—	—	—	—
40RUA30	FAN COIL BASE UNIT		1062	342.4	271.6	198.3	249.7	—	—	—	—
40RUS30	FAN COIL BASE UNIT		1042	335.7	266.4	194.5	245.4	—	—	—	—
40RUA/S (28, 30)	STEAM COIL	ADD	405	73.2	0.0	0.0	73.8	128.4	129.6	0.0	0.0
	HOT WATER COIL	ADD	345	62.6	0.0	0.0	62.1	110.7	109.6	0.0	0.0
	ECONOMIZER	ADD	450	0.0	88.5	82.0	0.0	0.0	0.0	145.3	134.2
	ECO + STEAM COIL	ADD	855	80.6	80.1	74.1	81.6	142.0	143.4	131.3	122
	ECO + HW COIL	ADD	795	76.8	73.7	68.2	75.7	135.0	133.6	120.3	111.7

DIMENSIONS (cont.)

40RU – SI

40RUA UNIT SIZE	UNIT OR ACCESSORY NAME		UNIT OR ACCESSORY WEIGHT (kg)	CORNER NUMBER (WEIGHT IN KG)							
				1	2	3	4	5	6	7	8
40RUA07	FAN COIL BASE UNIT		181	49.6	48.1	41.1	42.3	—	—	—	—
40RUA08	FAN COIL BASE UNIT		183	50.1	48.6	41.5	42.8	—	—	—	—
40RUS08	FAN COIL BASE UNIT		177	48.5	47.0	42.5	39	—	—	—	—
40RUS10	FAN COIL BASE UNIT		177	48.5	47.0	42.5	39	—	—	—	—
40RUA12	FAN COIL BASE UNIT		193	52.9	51.3	43.8	45.2	—	—	—	—
40RUS12	FAN COIL BASE UNIT		177	48.5	47.0	42.5	39	—	—	—	—
440RUA (07 – 12) 40RUS (08 – 12)	STEAM COIL	ADD	98	18.2	0.0	0.0	18.4	30.2	30.6	0.0	0.0
	HOT WATER COIL	ADD	89	16.4	0.0	0.0	16.7	27.5	28.2	0.0	0.0
	ECONOMIZER	ADD	84	0.0	16.7	16.2	0.0	0.0	0.0	25.8	25
	ECO + STEAM COIL	ADD	182	17.6	17.5	17.0	17.8	29.1	29.6	27.0	26.2
	ECO + HW COIL	ADD	173	16.8	16.3	15.8	17.2	28.3	29.0	25.1	24.3
40RUA14	FAN COIL BASE UNIT		315	86.3	83.7	71.5	73.7	—	—	—	—
40RUS14	FAN COIL BASE UNIT		300	82.2	79.7	68.1	70.0	—	—	—	—
40RUA16	FAN COIL BASE UNIT		323	88.5	85.9	73.3	75.6	—	—	—	—
40RUS16	FAN COIL BASE UNIT		307	84.1	81.6	69.7	71.6	—	—	—	—
40RUA25	FAN COIL BASE UNIT		331	90.5	88.0	75.1	77.4	—	—	—	—
40RUS25	FAN COIL BASE UNIT		310	84.7	82.5	70.3	72.5	—	—	—	—
40RUA/S (14 – 25)	STEAM COIL	ADD	155	28.1	0.0	0.0	28.3	49.3	49.3	0.0	0.0
	HOT WATER COIL	ADD	130	23.6	0.0	0.0	23.4	41.8	41.2	0.0	0.0
	ECONOMIZER	ADD	155	0.0	30.2	28.3	0.0	0.0	0.0	50.3	46.2
	ECO + STEAM COIL	ADD	310	29.3	29.0	26.9	29.6	51.5	51.9	47.6	44.2
	ECO + HW COIL	ADD	285	27.5	26.4	24.4	27.1	48.5	47.9	43.1	40.1
40RUA28	FAN COIL BASE UNIT		477	130.5	126.7	108.2	111.6	—	—	—	—
40RUS28	FAN COIL BASE UNIT		469	128.4	124.6	106.4	109.8	—	—	—	—
40RUA30	FAN COIL BASE UNIT		482	131.8	128.1	109.3	112.8	—	—	—	—
40RUS30	FAN COIL BASE UNIT		473	129.2	125.8	107.2	110.8	—	—	—	—
40RUA/S (28, 30)	STEAM COIL	ADD	184	33.4	0.0	0.0	33.6	58.5	58.5	0.0	0.0
	HOT WATER COIL	ADD	156	28.3	0.0	0.0	28.0	50.3	49.4	0.0	0.0
	ECONOMIZER	ADD	204	0.0	39.8	37.2	0.0	0.0	0.0	66.2	60.8
	ECO + STEAM COIL	ADD	387	36.5	36.4	33.5	36.9	64.4	64.8	59.4	55.1
	ECO + HW COIL	ADD	360	34.8	33.5	30.8	34.2	61.2	60.5	54.5	50.6

LEGEND:
ECO – Economizer
HW – Hot Water

CORNER WEIGHTS
VERTICAL POSITION

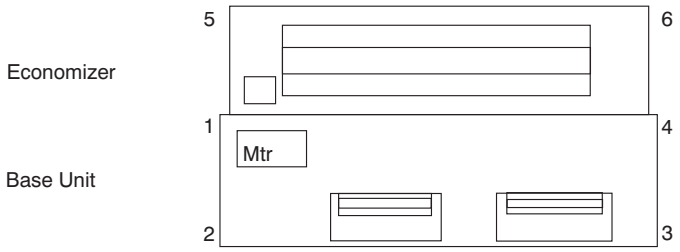

NOTE: Steam, Hot Water & Plenum
on top of positions 1,2,3,4

C09040

40RU – English

40RU UNIT SIZE	UNIT OR ACCESSORY NAME		UNIT OR ACCESSORY WEIGHT (lb)	CORNER NUMBER (WEIGHT IN LB)					
				1	2	3	4	5	6
40RUA07	FAN COIL BASE UNIT		399	100.5	114.9	98.0	85.8	—	—
40RUA08	FAN COIL BASE UNIT		404	101.7	116.3	99.1	86.9	—	—
40RUS08	FAN COIL BASE UNIT		390	98.2	116.2	99.1	76.5	—	—
40RUS10	FAN COIL BASE UNIT		391	98.9	116.5	99.4	76.2	—	—
40RUA12	FAN COIL BASE UNIT		425	107.6	122.3	108.0	87.1	—	—
40RUS12	FAN COIL BASE UNIT		391	98.9	116.5	99.4	76.2	—	—
40RUA/S 07,08,12	STEAM COIL	ADD	215	54.1	54.1	53.4	53.4	0.0	0.0
	HOT WATER COIL	ADD	195	49.4	49.4	48.1	48.1	0.0	0.0
	PLENUM	ADD	175	50.8	36.7	36.7	50.8	0.0	0.0
	ECONOMIZER	ADD	195	38.9	0.0	0.0	37.1	59.9	58.3
	ECO + STEAM COIL	ADD	410	93.0	53.4	52.6	91.1	61.0	59.1
	ECO + HW COIL	ADD	390	88.9	52.3	50.9	86.5	56.7	54.9
40RUA14	FAN COIL BASE UNIT		695	191.2	210.5	153.8	139.5	—	—
40RUS14	FAN COIL BASE UNIT		661	181.8	200.3	146.3	132.6	—	—
40RUA16	FAN COIL BASE UNIT		713	196.2	216.0	157.8	143.1	—	—
40RUS16	FAN COIL BASE UNIT		677	186.3	205.1	149.8	135.8	—	—
40RUA/S 14, 16	STEAM COIL	ADD	340	85.4	85.4	84.6	84.6	0.0	0.0
	HOT WATER COIL	ADD	285	70.9	70.9	71.6	71.6	0.0	0.0
	PLENUM	ADD	225	72.5	40.0	40.0	72.5	0.0	0.0
	ECONOMIZER	ADD	340	66.5	0.0	0.0	62.0	109.5	102.0
	ECO + STEAM COIL	ADD	680	153.0	89.1	88.7	147.7	104.5	97.0
	ECO + HW COIL	ADD	625	139.9	82.5	83.3	136.7	94.7	87.9

DIMENSIONS (cont.)

40RU – SI

40RU UNIT SIZE	UNIT OR ACCESSORY NAME		UNIT OR ACCESSORY WEIGHT (kg)	CORNER NUMBER (WEIGHT IN LB)					
				1	2	3	4	5	6
40RUA07	FAN COIL BASE UNIT		181	45.5	52.3	44.4	38.8	—	—
40RUA08	FAN COIL BASE UNIT		183	46.0	52.7	44.9	39.4	—	—
40RUS08	FAN COIL BASE UNIT		177	44.5	51.0	43.4	38.1	—	—
40RUS10	FAN COIL BASE UNIT		177	44.5	51.0	43.4	38.1	—	—
40RUA12	FAN COIL BASE UNIT		193	48.5	55.6	47.4	41.5	—	—
40RUS12	FAN COIL BASE UNIT		177	44.5	51.0	43.4	38.1	—	—
40RUA/S 07,08,12	STEAM COIL	ADD	98	24.6	24.6	24.4	24.4	0.0	0.0
	HOT WATER COIL	ADD	89	22.4	22.4	22.1	22.1	0.0	0.0
	PLENUM	ADD	80	23.3	16.8	16.8	23.3	0.0	0.0
	ECONOMIZER	ADD	84	16.8	0.0	0.0	16.2	25.8	25.2
	ECO + STEAM COIL	ADD	182	41.3	23.6	23.3	40.3	27.0	26.5
	ECO + HW COIL	ADD	173	39.3	23.1	22.5	38.2	25.0	24.9
40RUA14	FAN COIL BASE UNIT		315	86.6	95.5	69.8	63.3	—	—
40RUS14	FAN COIL BASE UNIT		300	82.5	91.0	66.5	60.0	—	—
40RUA16	FAN COIL BASE UNIT		323	88.9	97.9	71.6	64.9	—	—
40RUS16	FAN COIL BASE UNIT		307	84.5	93.1	68.1	61.3	—	—
40RUA/S 14, 16	STEAM COIL	ADD	155	39.0	39.0	38.5	38.5	0.0	0.0
	HOT WATER COIL	ADD	130	32.4	32.4	32.6	32.6	0.0	0.0
	PLENUM	ADD	102	32.9	18.1	18.1	32.9	0.0	0.0
	ECONOMIZER	ADD	155	31.1	0.0	0.0	28.5	49.7	45.7
	ECO + STEAM COIL	ADD	310	69.8	40.7	40.4	67.3	47.6	44.2
	ECO + HW COIL	ADD	285	63.8	37.6	37.8	62.2	43.1	40.5

LEGEND:
ECO – Economizer
HW – Hot Water

DIMENSIONS (cont.)

OVERHEAD SUSPENSION ACCESSORY

UNIT SIZES 07-12
(FRONT)

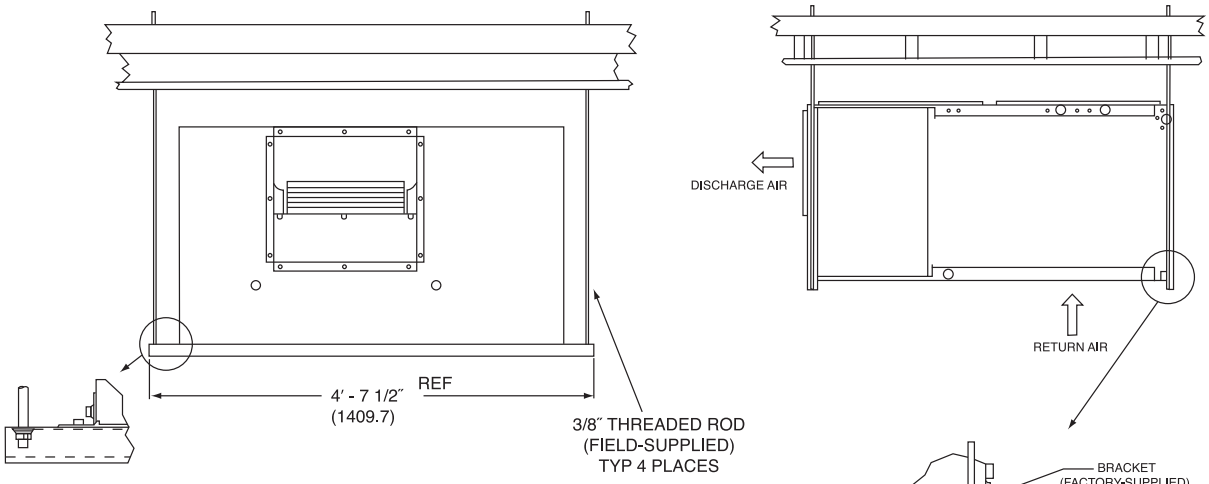

UNIT SIZES 14-25
(FRONT)

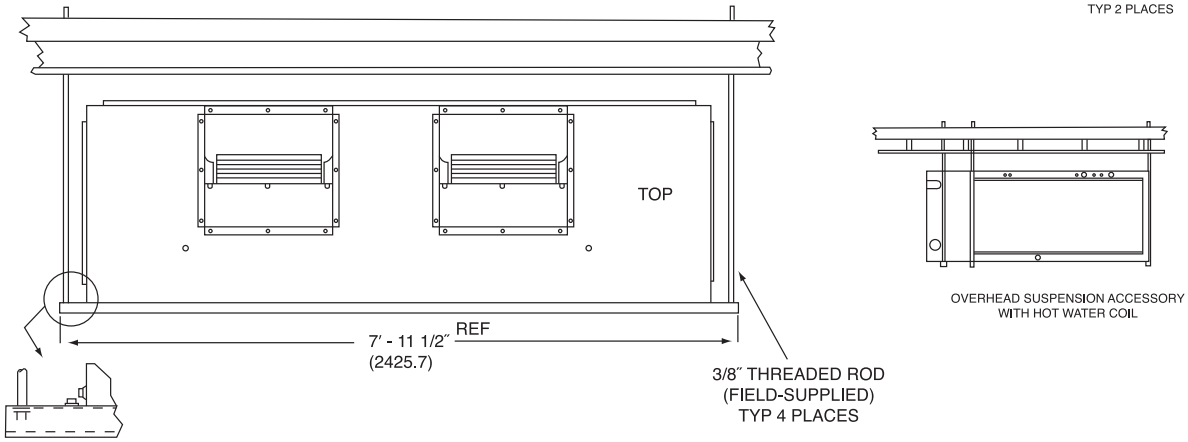

UNIT SIZES 28, 30
(FRONT)

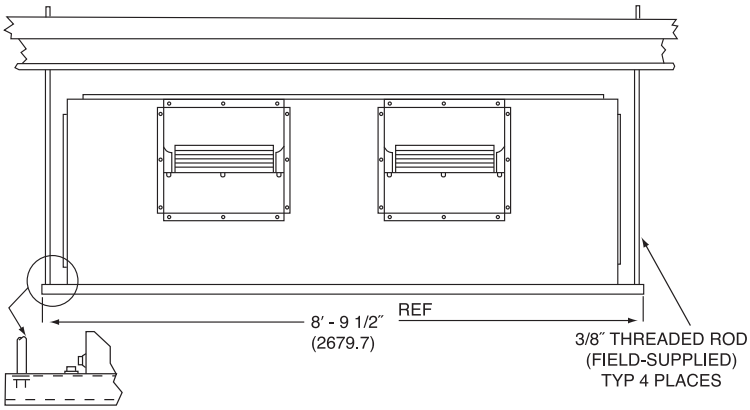

NOTE: Dimensions in [ ] are millimeters.

C09485

DIMENSIONS (cont.)

40RU

PLENUM, RETURN-AIR GRILLE, AND SUBBASE ACCESSORIES

UNIT SIZES 07-12

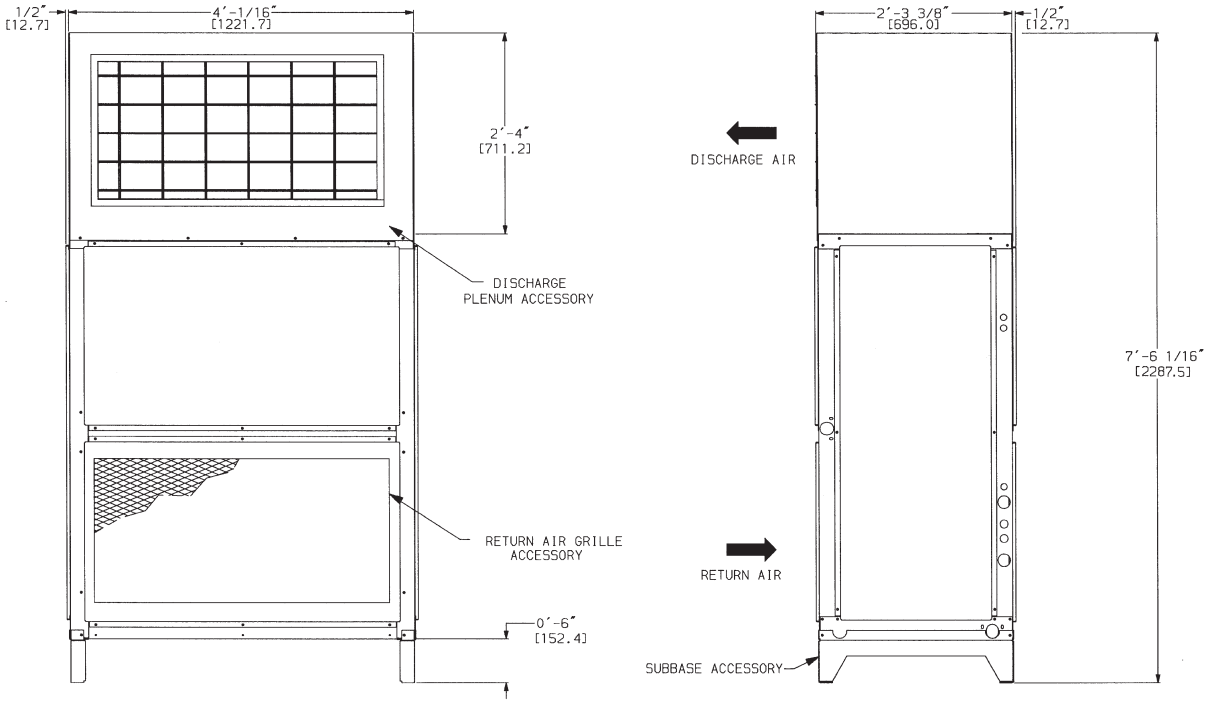

UNIT SIZE 14 - 25

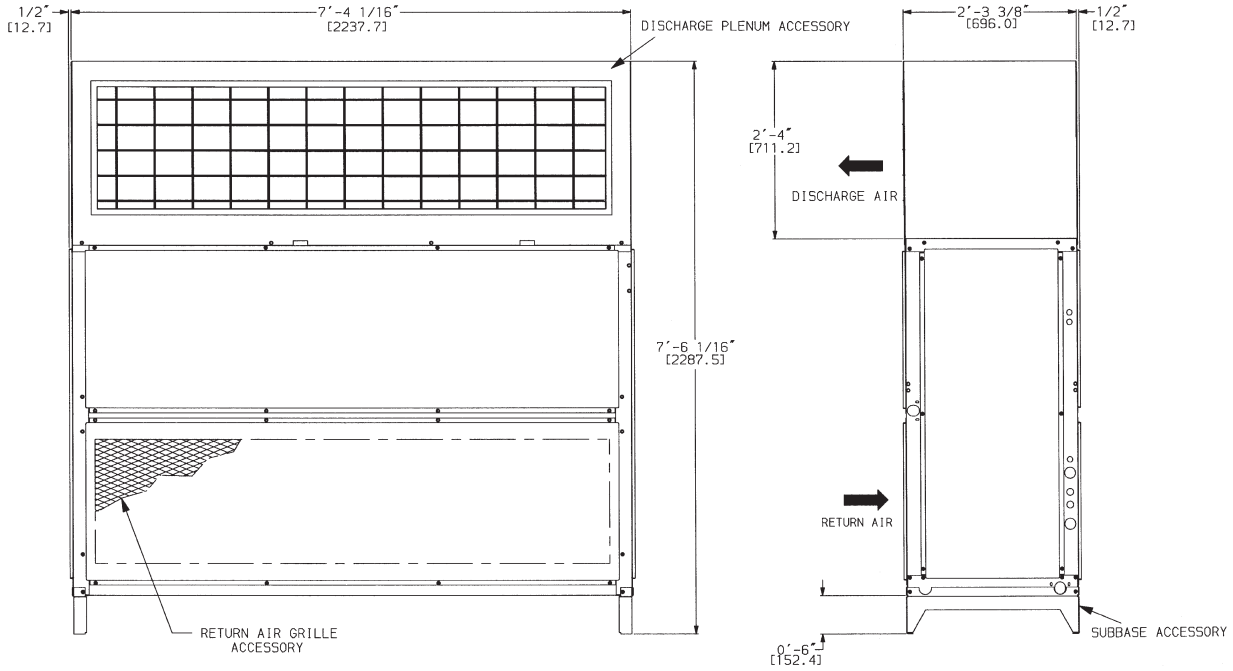

NOTE: Dimensions in [ ] are millimeters.

C09486

PLENUM, RETURN-AIR GRILLE, AND SUBBASE ACCESSORIES

UNIT SIZE 28, 30

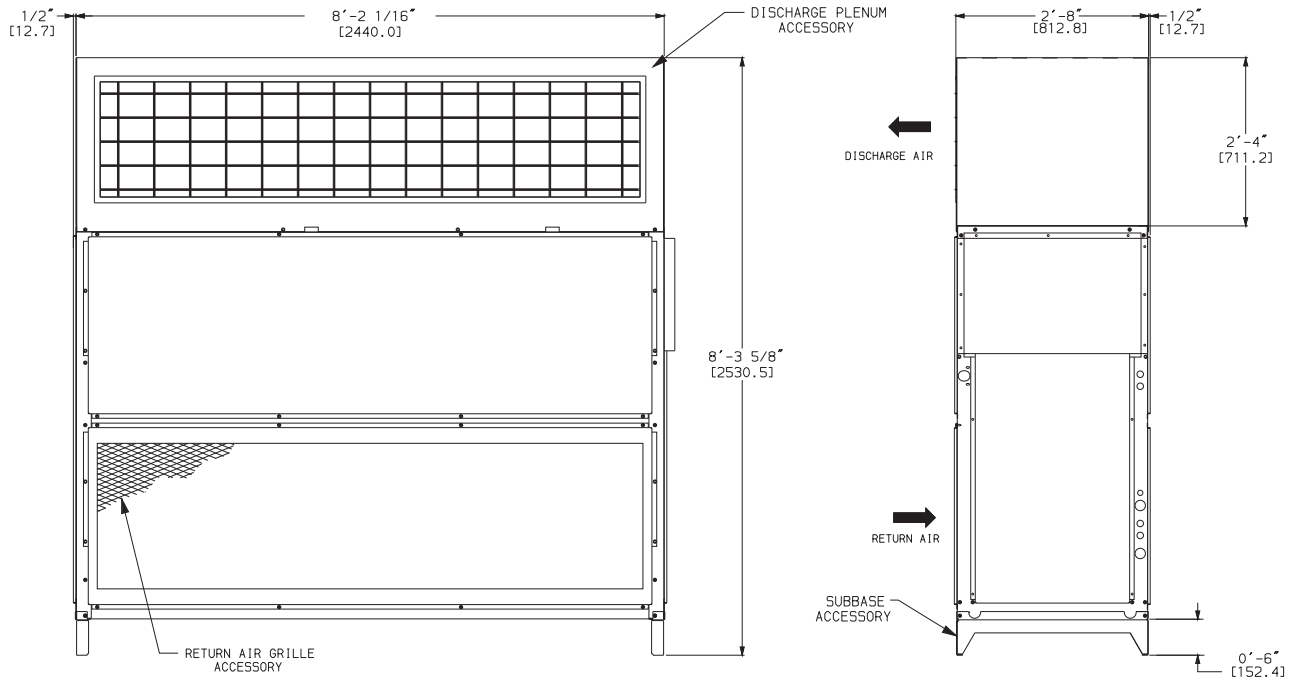

NOTE: Dimensions in [ ] are millimeters.

C09498

DIMENSIONS (cont.)

HOT WATER AND STEAM COIL ACCESSORIES

UNIT SIZES 07 - 12

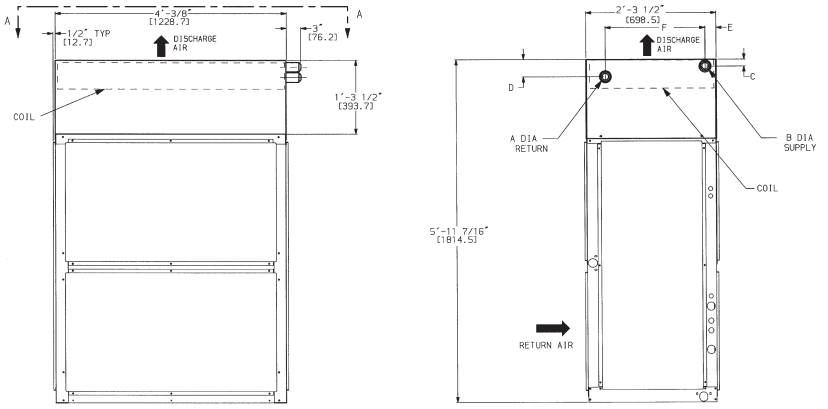

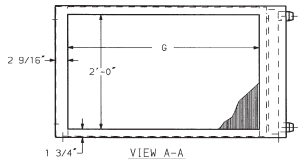

DIMENSION	HOT WATER COIL		STEAM COIL	
A	$1^1/_2$" MPT	[38.1]	$1^1/_2$" MPT	[38.1]
B	$1^1/_2$" MPT	[38.1]	$2^1/_2$" MPT	[63.5]
C	$2^3/_8$"	[60.3]	$3^1/_8$"	[79.4]
D	$4^7/_8$"	[123.8]	$3^1/_8$"	[79.4]
E	$2^1/_8$"	[54.0]	$4^9/_{16}$"	[115.8]
F	1'-$11^1/_4$"	[590.6]	1'-9"	[584.2]
G	3'-4"	[1016.0]	3'-4"	[1016.0]

UNIT SIZE 14 - 25

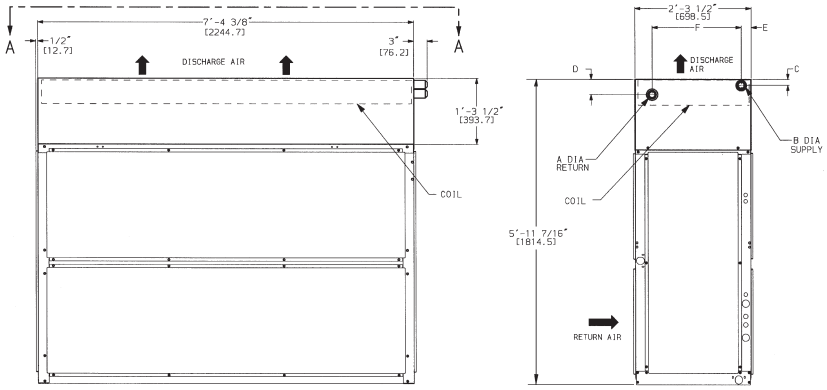

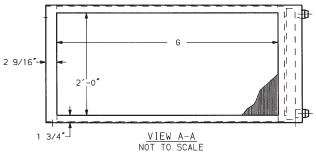

DIMENSION	HOT WATER COIL		STEAM COIL	
A	2" MPT	[50.8]	$1^1/_2$" MPT	[38.1]
B	2" MPT	[50.8]	$2^1/_2$" MPT	[63.5]
C	$2^3/_8$"	[60.3]	$3^1/_8$"	[79.4]
D	$4^7/_8$"	[123.8]	$3^1/_8$"	[79.4]
E	$2^1/_8$"	[54.0]	$4^9/_{16}$"	[115.8]
F	1'-$11^1/_4$"	[590.6]	1'-9"	[584.2]
G	6'-8"	[2032.0]	6'-8"	[2032.0]

NOTE: Dimensions in [ ] are millimeters.

C09487

HOT WATER AND STEAM COIL ACCESSORIES

UNIT SIZES 28, 30

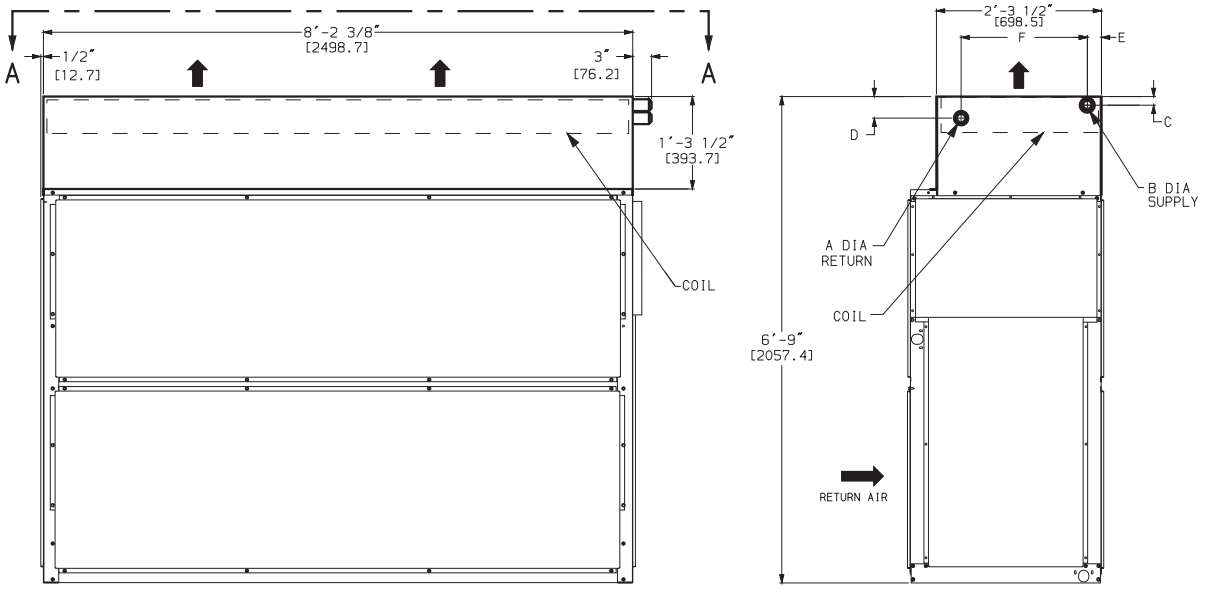

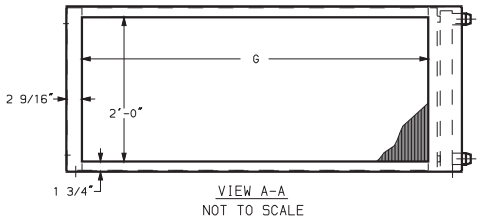

DIMENSION	HOT WATER COIL		STEAM COIL	
A	2"MPT	[50.8]	$1^{1}/_{2}$" MPT	[38.1]
B	2" MPT	[50.8]	$2^{1}/_{2}$" MPT	[63.5]
C	$2^{3}/_{8}$"	[60.3]	$3^{1}/_{8}$"	[79.4]
D	$4^{7}/_{8}$"	[123.8]	$3^{1}/_{8}$"	[79.4]
E	$2^{1}/_{8}$"	[54.0]	$4^{9}/_{16}$"	[115.8]
F	1'-$11^{1}/_{4}$"	[590.6]	1'-9"	[584.2]
G	7'-6"	[2286.0]	7'-6"	[2286.0]

NOTE: Dimensions in [ ] are millimeters.

C09499

ECONOMIZER ACCESSORY

UNIT SIZES 07-12

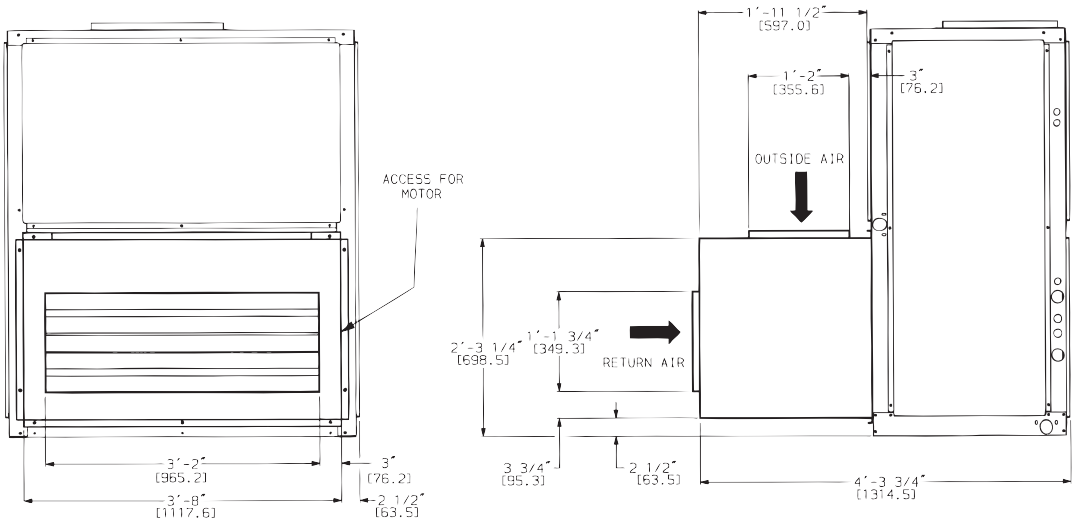

UNIT SIZES 14 - 25

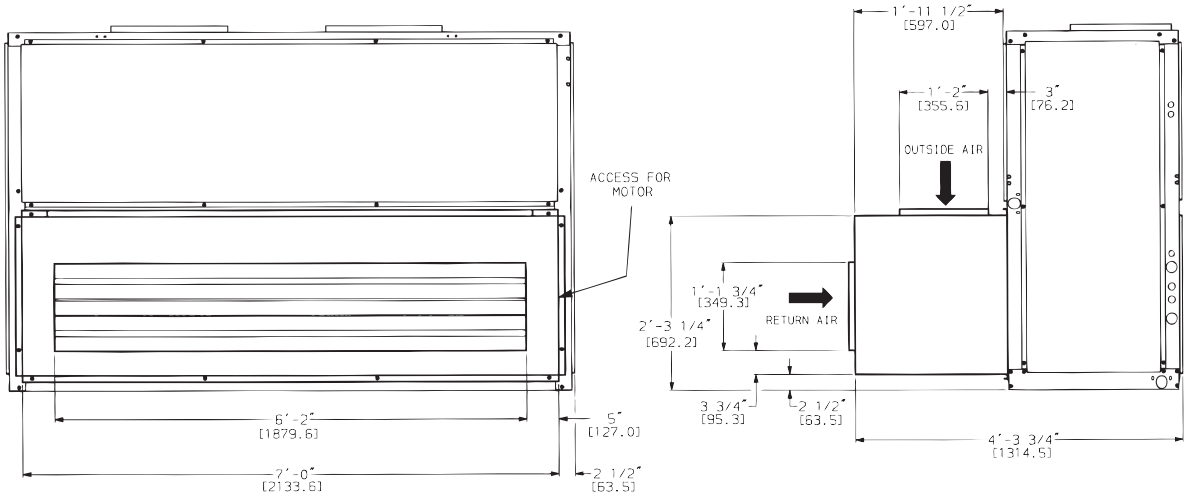

UNIT SIZES 28, 30

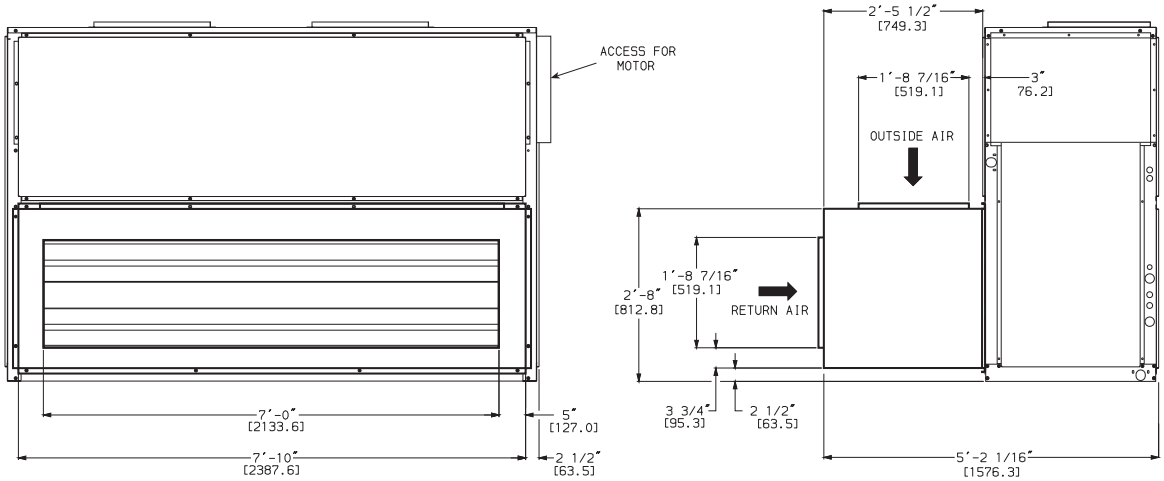

NOTE:

1. For horizontal unit applications, economizer can be attached to end of unit opposite duct connections.
2. Dimensions in [ ] are millimeters.

C09488

ELECTRIC HEAT ACCESSORY

UNIT SIZES 07 - 12

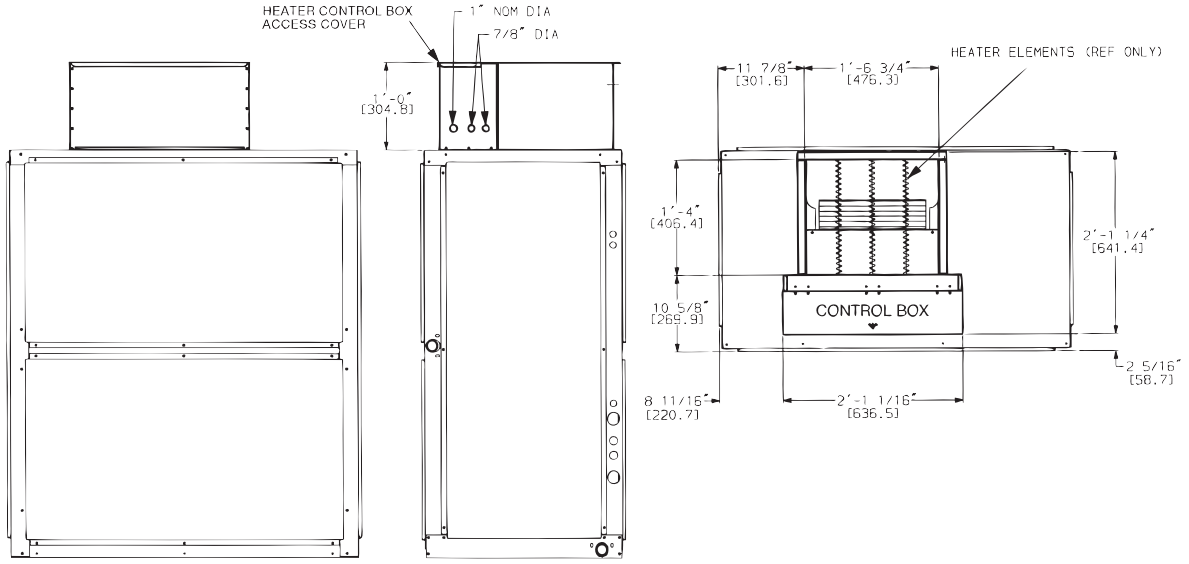

UNIT SIZE 14 - 30

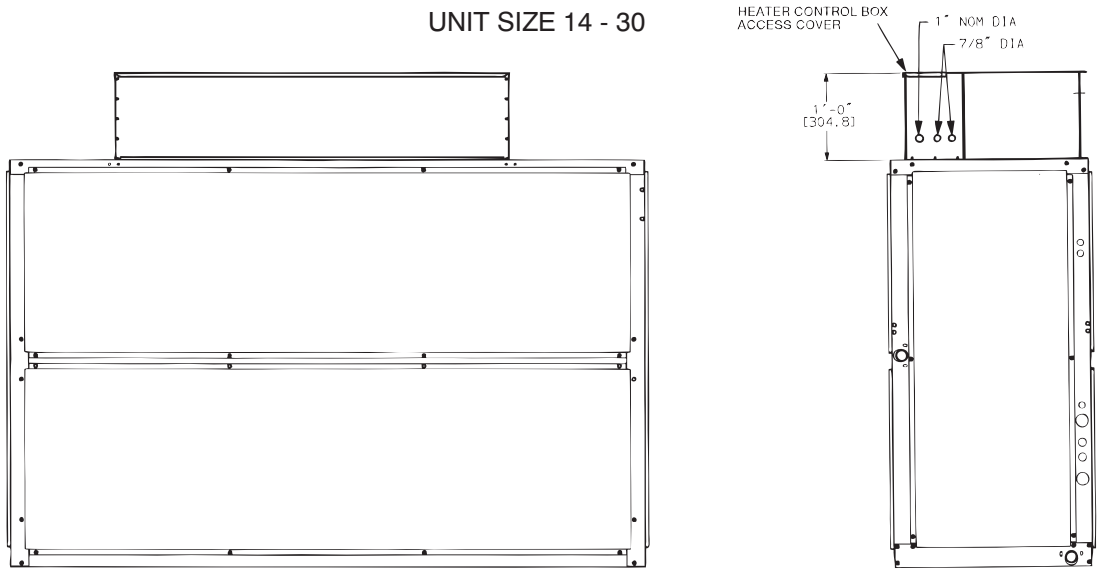

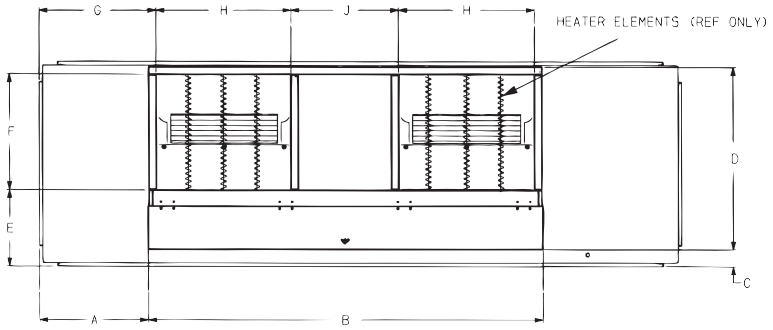

C09489

40RU UNIT SIZE	A	B	C	D	E	F	G	H	J
14 – 25	1'-3 1/4" [387.4]	4'-6 3/8" [1381.1]	2 5/16" [58.7]	2'-1 1/4" [641.4]	10 5/8" [269.9]	1'-4" [406.4]	1'-4 5/16" [414.3]	1'-6 3/4" [476.3]	1-7/8" [327.0]
28, 30	1'-3 3/8" [390.5]	5'-4 7/8" [1636.8]	2 1/16" [26.9]	2'-6 3/16" [766.8]	1'-1/4" [311.2]	1'-7" [482.6]	1'-4 5/16" [414.3]	1'-10" [558.8]	1-4 7/16" [417.1]

NOTE: Dimensions in [ ] are millimeters.

SELECTION PROCEDURE (WITH EXAMPLE)

Cooling (DX)

I. Determine the cooling load and temperature and quantity of air entering the evaporator.

Given:

Total Capacity . . . . . 200,000 Btuh

Sensible Heat Capacity . . . . . 130,000 Btuh

Air Temperature Entering Indoor Coil . . . . . 80°F (27°C)db, 67°F (19°C) wb

Air Quantity Entering Indoor Coil . . . . . 6000 cfm

Ductwork Static Pressure Loss . . . . . 0.8 in. wg

Power Supply 230-3-60

II. Determine unit selection and coil refrigerant temperature.

Enter the Cooling Capacities table at 6000 cfm. Select a 40RU16 unit which has a total capacity of 207,000 and 174,000 Btuh at 40 and 45°F (4 and 7°C) coil refrigerant temperature, respectively. By interpolation, coil refrigerant temperature of 41.1°F (5.1°C) is needed to give a total capacity of 200,000 Btuh. Sensible capacity is approximately 149,000 Btuh. Cooling load is satisfied.

Heating (Hot Water Coil)

I. Determine heating load and temperature of air entering the indoor coil.

Given:

Load . . . . . 425,000 Btuh

Entering-Air Temperature . . . . . 70°F (21°C)

Coils 2-Row Hot Water

Coil Entering-Water Temperature . . . . . 200°F (93°C)

Water Temperature Drop . . . . . 20°F (-7°C)

II. Find the heating capacity.

Enter Hydronic Heating Capacities table for the 40RU16 unit at 6000 cfm. A 2-row hot water coil delivers 471,000 Btuh (based on 60°F/16°C entering air temperature and 20°F/-7°C water temperature drop). Since existing entering air temperature is 70°F (21°C), enter the Heating Correction Factors table for hot water coils at 200°F (93°C) entering water temperature, 20°F (-7°C) water temperature drop and 70°F (21°C) entering air. Read a constant of 0.93.

471,000 x 0.93 = 438,000

The 438,000 Btuh rating satisfies the heating load.

Fan

I. Determine fan speed and brake horsepower:

From the Accessory Pressure Drop table, read a loss of 0.23 in. wg for a hot water coil at 6000 cfm.

External static pressure = 0.80 + 0.23

= 1.03 in. wg

Enter 40RU16 Fan Performance table at 6000 cfm and 1.03 in. wg. Interpolate and determine fan speed of 864 rpm and 3.1 bhp.

II. Determine motor and drive.

Enter the fan motor data tables and find that the 230 v standard motor for a 40RU16 unit is rated at 3.7 Hp. Since the bhp required is 3.1, a standard motor satisfies the requirement and should be used.

Next, find the type of drive that satisfies the 864 rpm requirement in the Drive Data tables. For a 40RU016 unit, the Medium-Static Drive table shows an rpm range of 742 to 943. Since the rpm required is 864, the medium-static drive satisfies the requirement and should be used. Select the standard motor and medium-static drive combination (option code HC or FD).

To select an outdoor unit for this 40RU16 indoor section, refer to the Combination Rating sheets for Carrier condensing units in the condensing unit Product Data Digest, or consult the Carrier Electronic Catalog.

Cooling (Chilled Water)

NOTE: Chilled water coils (40RUS) can be selected by using Carrier's Electronic Catalog software program.

PERFORMANCE DATA

40RU COOLING CAPACITIES – ENGLISH

UNIT 40RU	EVAPORATOR AIR		COIL REFRIGERANT TEMP (°F)									
	Airflow (Cfm) BF	Ewb (°F)	30		35		40		45		50	
			TC	SHC	TC	SHC	TC	SHC	TC	SHC	TC	SHC
07	1,800 .06	72	124	60	113	55	101	49	87	43	71	37
		67	104	64	93	59	81	53	67	47	52	40
		62	86	68	75	62	63	56	49	49	42	42
	2,400 .10	72	143	69	131	64	117	58	101	52	83	44
		67	121	76	108	70	94	64	78	57	60	50
		62	101	83	88	76	73	69	60	60	51	51
	3,000 .12	72	158	77	144	71	129	65	111	58	92	51
		67	134	86	121	80	105	73	87	66	67	58
		62	113	95	98	88	82	80	70	70	59	59
08	2,250 .06	72	155	75	141	68	126	61	108	54	89	46
		67	130	80	116	73	101	66	83	59	64	51
		62	108	85	94	78	78	70	62	62	52	52
	3,000 .10	72	179	86	164	80	146	72	126	64	103	56
		67	151	95	136	88	118	80	98	71	75	62
		62	126	103	110	95	92	86	76	76	64	64
	3,750 .12	72	197	96	180	89	161	82	139	73	115	63
		67	168	108	151	100	131	92	109	82	84	72
		62	141	119	122	110	103	100	87	87	74	74
12	3,000 .05	72	200	96	182	88	161	79	138	70	113	60
		67	168	104	150	96	130	86	107	76	83	66
		62	140	112	121	102	101	92	82	82	69	69
	4,000 .07	72	228	111	208	102	185	93	159	83	130	71
		67	194	124	174	114	150	104	124	93	96	81
		62	162	135	141	124	119	113	99	99	84	84
	5,000 .12	72	250	123	228	114	204	105	175	94	143	81
		67	214	140	192	130	166	119	138	107	106	94
		62	179	155	156	143	133	130	113	113	96	96
14	3,750 .06	72	251	121	228	110	202	99	173	87	140	74
		67	210	129	187	118	161	106	133	94	102	81
		62	174	138	150	126	125	113	100	100	84	84
	5,000 .08	72	289	139	263	128	233	116	200	103	162	88
		67	244	154	218	141	188	128	155	114	119	99
		62	203	167	176	153	146	138	121	121	102	102
	6,250 .10	72	319	155	290	143	258	131	221	116	180	101
		67	271	174	242	161	209	147	172	132	133	115
		62	226	192	196	177	164	160	139	139	118	118
16	4,500 .03	72	310	150	281	136	249	122	214	108	174	92
		67	260	160	231	145	199	131	165	116	127	100
		62	215	169	186	154	154	138	121	121	102	102
	6,000 .05	72	361	175	329	161	292	145	250	128	205	110
		67	304	191	271	175	235	159	194	141	149	122
		62	254	206	220	189	183	170	149	149	125	125
	7,500 .08	72	401	196	366	181	325	164	280	146	229	127
		67	340	218	304	201	263	183	218	164	167	143
		62	285	239	247	220	206	197	172	172	145	145

LEGEND

BF — Bypass Factor
db — Dry–Bulb Temp (°F)
Ewb — Entering Wet–Bulb Temp (°F)
lwb — Leaving Wet–Bulb Temp (°F)
SHC — Sensible Heat Capacity (1000 Btuh)
TC — Total Capacity (1000 Btuh)

NOTES:

1. Ratings based on approximately 15°F superheat leaving coil.
2. Direct interpolation is permissible. Do not extrapolate.
3. Dashes indicate coil loading limits are exceeded.
4. Evaporator fan heat not deducted from ratings.
5. Formulas:

$$\text{Leaving db} = \text{entering db} - \frac{\text{sensible heat capacity (Btuh)}}{1.1 \times \text{cfm}}$$

$$\text{Leaving db} = \text{wet–bulb temperature corresponding to enthalpy of air leaving coil } (h_{lwb})$$

$$h_{lwb} = h_{ewb} - \frac{\text{total capacity (Btuh)}}{4.5 \times \text{cfm}}$$

where h_{lwb} = enthalpy of air entering coil

6. SHC is based on 80°F db temperature of air entering evaporator coil.

40RU

40RU COOLING CAPACITIES – ENGLISH (cont.)

UNIT 40RU	EVAPORATOR AIR		COIL REFRIGERANT TEMP (°F)									
	Airflow (Cfm) BF	Ewb (°F)	30		35		40		45		50	
			TC	SHC	TC	SHC	TC	SHC	TC	SHC	TC	SHC
25	6,000 .03	72	408	197	372	180	331	162	272	141	232	123
		67	344	213	307	195	266	176	220	156	169	135
		62	286	227	248	208	207	188	164	164	139	139
	8,000 .06	72	470	228	429	210	382	191	329	170	269	147
		67	399	253	357	233	309	212	256	189	197	166
		62	333	275	290	254	242	230	202	202	170	170
	10,000 .07	72	516	253	471	235	421	215	363	192	297	168
		67	440	287	395	266	343	244	284	219	220	193
		62	369	317	322	294	271	266	232	232	196	196
28	7,500 .04	72	470	226	428	208	379	187	328	167	270	144
		67	395	246	354	227	307	205	255	183	197	159
		62	329	265	287	244	240	221	193	193	163	163
	10,000 .06	72	535	260	487	240	434	219	376	196	310	171
		67	454	291	407	269	354	246	295	221	228	194
		62	380	320	332	296	279	268	235	235	199	199
	12,500 .08	72	583	287	531	267	475	245	412	221	341	194
		67	499	329	448	306	390	282	325	255	252	225
		62	420	367	367	341	310	310	269	269	228	228
30	9,000 .04	72	564	271	513	249	456	225	394	200	324	173
		67	476	296	425	272	368	246	306	220	236	191
		62	395	319	344	293	288	265	231	231	195	195
	12,500 .06	72	642	312	584	288	521	263	451	235	372	205
		67	545	349	489	323	425	295	353	265	273	233
		62	456	383	398	355	334	322	281	281	238	238
	15,000 .08	72	699	345	637	320	570	294	495	265	410	233
		67	598	394	537	367	468	338	390	306	303	270
		62	503	440	440	409	371	371	322	322	273	273

LEGEND

BF — Bypass Factor
db — Dry–Bulb Temp (°F)
Ewb — Entering Wet–Bulb Temp (°F)
lwb — Leaving Wet–Bulb Temp (°F)
SHC — Sensible Heat Capacity (1000 Btuh)
TC — Total Capacity (1000 Btuh)

NOTES:

1. Ratings based on approximately 15°F superheat leaving coil.
2. Direct interpolation is permissible. Do not extrapolate.
3. Dashes indicate coil loading limits are exceeded.
4. Evaporator fan heat not deducted from ratings.
5. Formulas:

$$\text{Leaving db} = \text{entering db} - \frac{\text{sensible heat capacity (Btuh)}}{1.1 \times \text{cfm}}$$

$$\text{Leaving db} = \text{wet–bulb temperature corresponding to enthalpy of air leaving coil } (h_{lwb})$$

$$h_{lwb} = h_{ewb} - \frac{\text{total capacity (Btuh)}}{4.5 \times \text{cfm}}$$

where h_{lwb} = enthalpy of air entering coil

6. SHC is based on 80°F db temperature of air entering evaporator coil.

40RU COOLING CAPACITIES – SI

UNIT 40RU	EVAPORATOR AIR Airflow (L/s) BF	Ewb (°C)	COIL REFRIGERANT TEMP (°C) −1 TC	−1 SHC	2 TC	2 SHC	4 TC	4 SHC	7 TC	7 SHC	10 TC	10 SHC
07	850 .06	22	36	17	33	16	29	14	25	13	21	11
		19	31	19	27	17	24	16	20	14	15	12
		17	25	20	22	18	18	16	14	14	12	12
	1130 .10	22	42	20	38	19	34	17	30	15	24	13
		19	36	22	32	21	28	19	23	17	18	15
		17	30	24	26	22	22	20	18	18	15	15
	1420 .12	22	46	23	42	21	38	19	33	17	27	15
		19	39	25	35	24	31	21	25	19	20	17
		17	33	28	29	26	24	23	20	20	17	17
08	1060 .06	22	45	22	41	20	37	18	32	16	26	14
		19	38	23	34	21	30	19	24	17	19	15
		17	32	25	27	23	23	21	18	18	15	15
	1420 .10	22	52	25	48	23	43	21	37	19	30	16
		19	44	28	40	26	35	23	29	21	22	18
		17	37	30	32	28	27	25	22	22	19	19
	1770 .12	22	58	28	53	26	47	24	41	21	34	19
		19	49	32	44	29	38	27	32	24	25	21
		17	41	35	36	32	30	29	26	26	22	22
12	1420 .05	22	58	28	53	26	47	23	41	21	33	18
		19	49	31	44	28	38	25	31	22	24	19
		17	41	33	35	30	30	27	24	24	20	20
	1890 .07	22	67	33	61	30	54	27	47	24	38	21
		19	57	36	51	33	44	30	36	27	28	24
		17	47	40	41	36	35	33	29	29	25	25
	2360 .12	22	73	36	67	33	60	31	51	27	42	24
		19	63	41	56	38	49	35	40	31	31	28
		17	52	45	46	42	39	38	33	33	28	28
14	1770 .06	22	73	35	67	32	59	29	51	26	41	22
		19	62	38	55	35	47	31	39	28	30	24
		17	51	40	44	37	37	33	29	29	25	25
	2360 .08	22	85	41	77	38	68	34	59	30	47	26
		19	72	45	64	41	55	38	45	33	35	29
		17	60	49	52	45	43	40	35	35	30	30
	2980 .10	22	93	45	85	42	76	38	65	34	53	29
		19	79	51	71	47	61	43	50	39	39	34
		17	66	56	57	52	48	47	41	41	34	34
16	2120 .03	22	91	44	82	40	73	36	63	32	51	27
		19	76	47	68	43	58	38	48	34	37	29
		17	63	50	55	45	45	41	36	36	30	30
	2830 .05	22	106	51	96	47	86	43	73	37	60	32
		19	89	56	79	51	69	46	57	41	44	36
		17	74	60	65	55	54	50	44	44	37	37
	3540 .08	22	118	57	107	53	95	48	82	43	67	37
		19	100	64	89	59	77	54	64	48	49	42
		17	84	70	72	65	60	58	50	50	42	42

LEGEND

BF — Bypass Factor
db — Dry–Bulb Temp (°F)
Ewb — Entering Wet–Bulb Temp (°F)
lwb — Leaving Wet–Bulb Temp (°F)
SHC — Sensible Heat Capacity (1000 Btuh)
TC — Total Capacity (1000 Btuh)

NOTES:

1. Ratings based on approximately 15°F superheat leaving coil.
2. Direct interpolation is permissible. Do not extrapolate.
3. Dashes indicate coil loading limits are exceeded.
4. Evaporator fan heat not deducted from ratings.
5. Formulas:

$$\text{Leaving db} = \text{entering db} - \frac{\text{sensible heat capacity (Btuh)}}{1.1 \times \text{cfm}}$$

$$\text{Leaving db} = \text{wet–bulb temperature corresponding to enthalpy of air leaving coil } (h_{lwb})$$

$$h_{lwb} = h_{ewb} - \frac{\text{total capacity (Btuh)}}{4.5 \times \text{cfm}}$$

where h_{lwb} = enthalpy of air entering coil

6. SHC is based on 80°F db temperature of air entering evaporator coil.

PERFORMANCE DATA (cont.)

40RU COOLING CAPACITIES – SI (cont.)

UNIT 40RU	EVAPORATOR AIR		COIL REFRIGERANT TEMP (°C)									
	Airflow (L/s) BF	Ewb (°C)	–1		2		4		7		10	
			TC	SHC	TC	SHC	TC	SHC	TC	SHC	TC	SHC
25	2830 .03	22	120	58	109	53	97	48	80	41	68	36
		19	101	62	90	57	78	52	64	46	50	40
		17	84	67	73	61	61	55	48	48	41	41
	3780 .06	22	138	67	126	62	112	56	96	50	79	43
		19	117	74	105	68	91	62	75	56	58	49
		17	98	81	85	74	71	67	59	59	50	50
	4720 .07	22	151	74	138	69	123	63	106	56	87	49
		19	129	84	116	78	100	71	83	64	64	57
		17	108	93	94	86	79	78	68	68	58	58
28	3540 .04	22	138	66	125	61	111	55	96	49	79	42
		19	116	72	104	66	90	60	75	54	58	47
		17	96	78	84	72	70	65	57	57	48	48
	4720 .06	22	157	76	143	70	127	64	110	57	91	50
		19	133	85	119	79	104	72	86	65	67	57
		17	111	94	97	87	82	79	69	69	58	58
	5900 .08	22	171	84	156	78	139	72	121	65	100	57
		19	146	96	131	90	114	83	95	75	74	66
		17	123	107	107	100	91	91	79	79	67	67
30	4250 .04	22	165	79	150	73	134	66	115	59	95	51
		19	139	87	124	80	108	72	90	64	69	56
		17	116	93	101	86	84	78	68	68	57	57
	5660 .06	22	188	91	171	84	153	77	132	69	109	60
		19	160	102	143	95	124	87	104	78	80	68
		17	134	112	117	104	98	94	82	82	70	70
	7080 .08	22	205	101	187	94	167	86	145	78	120	68
		19	175	116	157	108	137	99	114	90	89	79
		17	148	129	129	120	109	109	94	94	80	80

LEGEND

BF — Bypass Factor
db — Dry–Bulb Temp (°F)
Ewb — Entering Wet–Bulb Temp (°F)
lwb — Leaving Wet–Bulb Temp (°F)
SHC — Sensible Heat Capacity (1000 Btuh)
TC — Total Capacity (1000 Btuh)

NOTES:

1. Ratings based on approximately 15°F superheat leaving coil.
2. Direct interpolation is permissible. Do not extrapolate.
3. Dashes indicate coil loading limits are exceeded.
4. Evaporator fan heat not deducted from ratings.
5. Formulas:

$$\text{Leaving db} = \text{entering db} - \frac{\text{sensible heat capacity (Btuh)}}{1.1 \times \text{cfm}}$$

$$\text{Leaving db} = \text{wet–bulb temperature corresponding to enthalpy of air leaving coil } (h_{lwb})$$

$$h_{lwb} = h_{ewb} - \frac{\text{total capacity (Btuh)}}{4.5 \times \text{cfm}}$$

where h_{lwb} = enthalpy of air entering coil

6. SHC is based on 80°F db temperature of air entering evaporator coil.

PERFORMANCE DATA (cont.)

HYDRONIC HEATING CAPACITIES — English

UNIT	AIRFLOW (Cfm)	1-ROW STEAM*		2-ROW HOT WATER COIL†			
		Cap.	Ldb	Cap.	Ldb	Water Flow (Gpm)	PD
40RUA 07	1,800	146	134	156.0	140	15.6	3.4
	2,400	173	126	183.0	131	18.3	4.3
	3,000	209	123	206.0	124	20.6	5.2
40RUA/S 08	2,250	168	129	174.0	133	17.4	4.0
	3,000	209	123	206.0	124	20.6	5.2
	3,750	240	117	238.0	118	23.8	6.5
40RUS 10	2,550	183	125	199.0	132	19.9	4.5
	3,400	229	121	233.0	123	23.3	5.7
	4,250	254	114	271.0	119	27.1	7.2
40RUA/S 12	3,000	209	123	299.0	152	29.9	5.0
	4,000	243	115	275.0	124	27.5	6.6
	5,000	279	111	316.0	119	31.6	8.2
40RUA/S 14	3,750	370	150	362.0	149	36.2	4.2
	5,000	425	137	409.0	136	40.9	5.1
	6,250	465	128	456.0	128	45.6	6.0
40RUA/S 16	4,500	402	141	412.0	145	41.2	4.5
	6,000	458	129	471.0	133	47.1	5.5
	7,500	479	118	529.0	125	52.9	6.6
40RUA/S 25	6,000	458	129	506.0	138	50.6	5.1
	8,000	487	115	584.0	128	58.4	6.3
	10,000	499	105	652.0	120	65.2	7.5
40RUA/S 28	7,500	511	122	649.0	140	64.9	5.7
	10,000	575	112	752.0	130	75.2	7.1
	12,500	626	106	842.0	122	84.2	8.5
40RUA/S 30	9,000	560	117	735.0	136	73.5	6.2
	12,000	621	107	850.0	126	85.0	7.8
	15,000	670	101	950.0	119	95.0	9.3

LEGEND:

Cap. – Capacity (Btuh in thousands)

Ldb – Leaving Air Dry Bulb Temp (°F)

PD . – Pressure Drop (ft water)

* Based on 5 psig steam, 60° F entering-air temperature. All steam coils are non-freeze type.

† Based on 200° F entering water, 20° F water temperature drop, 60° F entering-air temperature.

NOTES:

1. Maximum operating limits for heating coils: 20 psig at 260°F.
2. Leaving db = ent db (°F) + $\frac{\text{Capacity (Btuh)}}{1.1 \times \text{cfm}}$
3. See Heating Correction Factors table.

HYDRONIC HEATING CAPACITIES — SI

UNIT	AIRFLOW (L/s)	1-ROW STEAM*		2-ROW HOT WATER COIL†			
		Cap.	Ldb	Cap.	Ldb	Water Flow (L/s)	PD
40RUA 07	850	43	57	46	59	1.0	10.2
	1150	53	53	53	53	1.2	12.8
	1450	62	51	61	50	1.3	16.0
40RUA/S 08	1000	48	55	50	56	1.1	11.5
	1400	59	50	60	50	1.3	15.3
	1800	71	47	70	47	1.5	19.5
40RUS 10	1200	54	52	58	55	1.3	13.4
	1600	64	48	69	50	1.5	17.3
	2000	74	46	79	48	1.7	21.4
40RUA/S 12	1450	62	50	88	65	1.9	15.0
	1900	72	46	90	54	2.0	24.7
	2350	82	44	93	48	2.0	24.5
40RUA/S 14	1750	108	66	106	65	2.3	12.4
	2350	122	58	120	57	2.6	15.2
	2950	136	53	134	52	2.9	17.9
40RUA/S 16	2100	117	61	120	62	2.6	13.3
	2800	129	53	137	55	3.0	16.2
	3500	140	48	154	51	3.3	19.5
40RUA/S 25	2900	135	53	150	58	3.3	15.6
	3800	140	46	170	52	3.7	18.6
	4700	146	41	191	49	4.1	22.3
40RUA/S 28	3500	149	50	189	60	4.1	16.9
	4700	166	44	218	53	4.7	20.8
	5900	183	41	247	50	5.4	25.4
40RUA/S 30	4250	164	47	215	57	4.7	18.5
	5650	180	41	247	51	5.4	22.8
	7050	196	38	278	48	6.0	27.7

LEGEND:

Cap. – Capacity (Btuh in thousands)

Ldb – Leaving Air Dry Bulb Temp (°C)

PD . – Pressure Drop (ft water)

* Based on 34.5 kPag steam, 15.6° C entering-air temperature. All steam coils are non-freeze type.

† Based on 93.3° C entering water temperature, 11.1° C water temperature drop, 15.6° C entering-air temperature.

NOTES:

1. Maximum operating limits for heating coils: 138 kPag at 126.7°C.
2. Leaving db = ent db (°C) + $\frac{\text{Capacity (kW)}}{1.23 \times 10^{-3} \times \text{L/s}}$
3. See Heating Correction Factors table.

HEATING CORRECTION FACTORS — English

HOT WATER COIL						
Water Temp Drop (°F)	Ent Water Temp (°F)	Entering-Air Temp (°F)				
		40	50	60	70	80
10	140	0.72	0.64	0.57	0.49	0.41
	160	0.89	0.81	0.74	0.66	0.58
	180	1.06	0.98	0.90	0.83	0.75
	200	1.22	1.15	1.07	1.00	0.92
	220	1.39	1.32	1.24	1.17	1.09
20	140	0.64	0.57	0.49	0.41	0.33
	160	0.81	0.74	0.66	0.58	0.51
	180	0.98	0.91	0.83	0.75	0.68
	200	1.15	1.08	1.00	0.93	0.85
	220	1.32	1.25	1.17	1.10	1.02
30	140	0.56	0.49	0.41	0.33	0.24
	160	0.74	0.66	0.58	0.51	0.43
	180	0.91	0.83	0.76	0.68	0.60
	200	1.08	1.00	0.93	0.85	0.78
	220	1.25	1.18	1.10	1.03	0.95

STEAM COIL					
Steam Pressure (psig)	Entering-Air Temp (°F)				
	40	50	60	70	80
0	1.06	0.98	0.91	0.85	0.78
2	1.09	1.02	0.95	0.89	0.82
5	1.13	1.06	1.00	0.93	0.87

NOTE: Multiply capacity given in the Hydronic Heating Capacities table by the correction factor for conditions at which unit is actually operating. Correct leaving-air temperature using formula in Note 2 of Hydronic Heating Capacities table.

HEATING CORRECTION FACTORS — SI

HOT WATER COIL						
Water Temp Drop (°C)	Ent Water Temp (°C)	Entering-Air Temp (°C)				
		4	10	16	20	25
5	60	0.72	0.64	0.55	0.50	0.43
	70	0.87	0.79	0.71	0.65	0.58
	80	1.02	0.94	0.86	0.80	0.73
	90	1.17	1.09	1.01	0.95	0.89
	100	1.32	1.24	1.16	1.10	1.04
11	60	0.65	0.56	0.48	0.42	0.35
	70	0.80	0.72	0.63	0.58	0.51
	80	0.95	0.87	0.79	0.73	0.66
	90	1.10	1.02	0.94	0.89	0.82
	100	1.26	1.18	1.09	1.04	0.97
16	60	0.56	0.48	0.39	0.33	0.26
	70	0.72	0.63	0.55	0.49	0.42
	80	0.87	0.79	0.70	0.65	0.58
	90	1.02	0.94	0.86	0.81	0.74
	100	1.18	1.10	1.02	0.97	0.90

STEAM COIL					
Steam Pressure (kPag)	Entering-Air Temp (°C)				
	4	10	16	20	25
0	1.07	0.99	0.91	0.86	0.80
14	1.10	1.02	0.95	0.90	0.84
35	1.14	1.07	0.99	0.95	0.89

NOTE: Multiply capacity given in the Hydronic Heating Capacities table by the correction factor for conditions at which unit is actually operating. Correct leaving-air temperature using formula in Note 2 of Hydronic Heating Capacities table.

PERFORMANCE DATA (cont.)

FAN PERFORMANCE DATA — 40RUA
0.0-1.2 in. wg ESP — 60 Hz, English

UNIT 40RUA	AIRFLOW (Cfm)	EXTERNAL STATIC PRESSURE (in. wg)													
		0.0		0.2		0.4		0.6		0.8		1.0		1.2	
		Rpm	Bhp	Rpm	Bhp	Rpm	Bhp	Rpm	Bhp	Rpm	Bhp	Rpm	Bhp	Rpm	Bhp
07	**1,800**	**419**	**0.21**	471	0.26	564	0.37	649	0.49	727	0.63	797	0.77	862	0.92
	2,100	471	0.31	519	0.37	602	0.49	679	0.62	751	0.77	819	0.92	882	1.09
	2,400	524	0.44	568	0.51	645	0.64	715	0.79	781	0.94	844	1.11	905	1.28
	2,700	578	0.61	619	0.69	690	0.84	755	0.99	816	1.15	875	1.33	932	1.51
	3,000	633	0.81	671	0.90	738	1.07	799	1.24	856	1.41	910	1.60	963	1.79
08	**2,250**	**290**	**0.10**	**510**	**0.39**	594	0.51	669	0.65	739	0.79	806	0.95	870	1.12
	2,600	**349**	**0.19**	561	0.55	640	0.70	709	0.84	773	1.00	834	1.16	893	1.34
	3,000	579	0.70	621	0.79	695	0.96	759	1.12	818	1.30	874	1.47	928	1.66
	3,400	646	0.99	683	1.09	752	1.29	813	1.48	869	1.67	920	1.86	970	2.06
	3,750	705	1.31	739	1.42	804	1.63	862	1.85	915	2.05	964	2.26	1011	2.48
12	**3,000**	**421**	**0.35**	**592**	**0.73**	670	0.90	737	1.06	797	1.23	854	1.41	908	1.59
	3,500	**626**	**0.98**	**664**	**1.08**	735	1.28	798	1.48	855	1.67	908	1.87	958	2.07
	4,000	706	1.42	738	1.54	803	1.77	862	2.00	917	2.23	967	2.45	1014	2.67
	4,500	786	1.99	815	2.12	873	2.39	929	2.65	980	2.90	1028	3.16	1073	3.41
	5,000	867	2.70	893	2.84	946	3.14	997	3.43	1046	3.72	1092	4.00	1135	4.28
14	**3,750**	**410**	**0.43**	**467**	**0.55**	567	0.83	649	1.12	721	1.41	788	1.72	851	2.05
	4,300	**455**	**0.62**	**504**	**0.74**	599	1.05	679	1.38	748	1.70	811	2.04	871	2.39
	5,000	**514**	**0.92**	556	1.06	641	1.39	718	1.76	786	2.14	847	2.52	903	2.91
	5,700	575	1.32	612	1.47	686	1.82	759	2.23	825	2.66	884	3.09	939	3.52
	6,250	624	1.71	657	1.87	725	2.24	793	2.66	856	3.12	915	3.59	969	4.06
16	**4,500**	**437**	**0.61**	**483**	**0.72**	576	1.01	660	1.35	732	1.69	797	2.03	856	2.38
	5,300	**499**	**0.95**	538	1.07	617	1.37	696	1.74	767	2.13	830	2.53	888	2.94
	6,000	**555**	**1.34**	590	1.48	659	1.79	730	2.17	798	2.59	860	3.04	918	3.49
	6,800	620	1.91	651	2.06	712	2.39	774	2.78	836	3.22	896	3.71	952	4.21
	7,500	677	2.52	706	2.69	761	3.04	817	3.44	873	3.89	929	4.39	984	4.93
25	**6,000**	**542**	**1.29**	**577**	**1.42**	**646**	**1.72**	716	2.09	785	2.51	849	2.95	907	3.40
	7,000	**620**	**1.99**	**652**	**2.15**	711	2.48	771	2.85	831	3.28	890	3.76	947	4.27
	8,000	700	2.92	728	3.10	781	3.46	833	3.85	885	4.29	938	4.78	990	5.32
	9,000	781	4.10	806	4.30	854	4.71	900	5.13	946	5.58	993	6.08	1039	6.62
	10,000	862	5.56	885	5.79	929	6.24	971	6.70	1012	7.18	1054	7.69	1096	8.24
28	**7,500**	**476**	**1.39**	**510**	**1.58**	**579**	**1.99**	**644**	**2.40**	701	2.81	752	3.29	804	3.96
	8,750	**545**	**2.14**	**574**	**2.35**	**633**	**2.81**	691	3.29	747	3.77	797	4.25	842	4.76
	10,000	**615**	**3.12**	**641**	**3.36**	692	3.87	743	4.41	794	4.96	843	5.51	888	6.05
	11,250	685	4.37	709	4.64	754	5.20	800	5.79	845	6.40	891	7.02	935	7.64
	12,500	756	5.92	778	6.22	819	6.83	860	7.47	901	8.14	942	8.83	983	9.52
30	**9,000**	**539**	**2.18**	**569**	**2.39**	**626**	**2.85**	683	3.34	739	3.83	791	4.32	837	4.82
	10,500	**620**	**3.37**	**646**	**3.62**	695	4.13	744	4.68	793	5.25	842	5.83	888	6.41
	12,000	701	4.94	724	5.22	769	5.80	811	6.40	854	7.04	897	7.69	940	8.36
	13,500	783	6.95	804	7.27	844	7.91	883	8.57	920	9.26	958	9.97	996	10.71
	15,000	865	9.45	884	9.81	921	10.52	956	11.24	991	11.98	1025	12.75	1059	13.54

LEGEND

Bhp — Brake Horsepower Input to Fan

ESP — External Static Pressure

Bold indicates field–supplied drive or motor is required.

Plain type indicates standard motor and standard drive.

Underline indicates a different motor and drive combination other than the standard motor and standard drive combination is required. Refer to fan motor and drive tables to complete selection.

NOTES:

Maximum allowable fan speed is 1100 rpm for unit sizes 028 and 030; 1200 rpm for all other sizes. Fan performance is based on deductions for wet coil, clean 2–in. filters, and unit casing. See table below for factory–supplied filter pressure drop. For 60 Hz units, the medium–static drive and standard motor combination is not available for 028 size.

FAN PERFORMANCE DATA — 40RUA
1.4-2.4 in. wg ESP — 60 Hz, English

UNIT 40RUA	AIRFLOW (Cfm)	EXTERNAL STATIC PRESSURE (in. wg)											
		1.4		1.6		1.8		2.0		2.2		2.4	
		Rpm	Bhp	Rpm	Bhp	Rpm	Bhp	Rpm	Bhp	Rpm	Bhp	Rpm	Bhp
07	1,800	921	1.07	975	1.23	1026	1.39	1074	1.55	**1120**	**1.72**	**1164**	**1.90**
	2,100	942	1.26	997	1.43	1048	1.61	**1097**	**1.79**	**1143**	**1.97**	**1186**	**2.16**
	2,400	963	1.47	1017	1.66	1069	1.85	**1118**	**2.05**	**1164**	**2.25**	—	—
	2,700	987	1.71	1039	1.91	**1090**	**2.12**	**1138**	**2.33**	**1185**	**2.55**	—	—
	3,000	1015	1.99	1065	2.20	**1113**	**2.42**	**1161**	**2.65**	—	—	—	—
08	2,250	930	1.29	986	1.47	1039	1.65	1089	1.84	1136	2.03	1181	2.22
	2,600	950	1.53	1005	1.72	1057	1.92	1107	2.13	1154	2.33	—	—
	3,000	980	1.86	1031	2.06	1081	2.27	1129	2.49	1175	2.72	—	—
	3,400	1018	2.26	1065	2.48	1111	2.70	1156	2.93	—	—	—	—
	3,750	1057	2.69	1101	2.92	1144	3.15	1186	3.39	—	—	—	—
12	3,000	961	1.78	1012	1.98	1062	2.19	1111	2.41	1158	2.64	—	—
	3,500	1005	2.27	1052	2.49	1098	2.71	1142	2.94	1186	3.18	—	—
	4,000	1058	2.90	1101	3.13	1143	3.36	1184	3.60	—	—	—	—
	4,500	1116	3.66	1157	3.91	1196	4.16	—	—	—	—	—	—
	5,000	1176	4.56	—	—	—	—	—	—	—	—	—	—
14	3,750	912	2.39	971	2.76	1028	3.14	1083	3.54	**1135**	**3.95**	**1185**	**4.36**
	4,300	928	2.75	982	3.13	1036	3.53	1087	3.94	**1138**	**4.37**	**1187**	**4.81**
	5,000	956	3.30	1007	3.71	1056	4.13	**1104**	**4.56**	**1151**	**5.00**	**1196**	**5.46**
	5,700	990	3.96	1039	4.40	1086	4.85	**1130**	**5.31**	**1174**	**5.78**	—	—
	6,250	1019	4.54	1067	5.02	**1112**	**5.50**	**1156**	**5.99**	**1198**	**6.49**	—	—
16	4,500	912	2.75	967	3.12	1019	3.52	1070	3.92	1120	4.35	1168	4.79
	5,300	942	3.34	992	3.76	1041	4.18	1088	4.61	1134	5.06	**1179**	**5.52**
	6,000	971	3.95	1020	4.40	1067	4.86	1112	5.33	1156	5.81	**1198**	**6.29**
	6,800	1005	4.72	1054	5.23	1101	5.75	1145	6.27	**1187**	**6.79**	—	—
	7,500	1036	5.48	1084	6.04	1131	6.61	**1174**	**7.17**	—	—	—	—
25	6,000	961	3.86	1011	4.31	1058	4.77	1104	5.24	1147	5.71	—	—
	7,000	1000	4.79	1050	5.32	1097	5.85	1142	6.38	1184	6.91	—	—
	8,000	1041	5.88	1090	6.47	1137	7.07	1181	7.67	—	—	—	—
	9,000	1086	7.21	1133	7.82	1178	8.47	—	—	—	—	—	—
	10,000	1138	8.83	1180	9.46	—	—	—	—	—	—	—	—
28	7,500	874	5.33	897	5.91	940	6.80	990	7.50	—	—	—	—
	8,750	886	5.36	930	6.13	982	7.32	1020	8.10	—	—	—	—
	10,000	930	6.60	969	7.20	1007	7.89	1045	8.71	—	—	—	—
	11,250	976	8.25	1014	8.86	1051	9.49	**1086**	**10.17**	—	—	—	—
	12,500	1023	10.20	1061	10.88	**1097**	**11.56**	—	—	—	—	—	—
30	9,000	881	5.37	923	6.03	967	6.89	1020	8.25	—	—	—	—
	10,500	930	6.97	970	7.55	1008	8.17	1045	8.86	—	—	—	—
	12,000	981	9.02	1021	9.67	1058	10.32	**1094**	**10.97**	—	—	—	—
	13,500	1035	11.45	1072	12.20	—	—	—	—	—	—	—	—
	15,000	1093	14.35	—	—	—	—	—	—	—	—	—	—

LEGEND

Bhp — Brake Horsepower Input to Fan

ESP — External Static Pressure

Bold indicates field–supplied drive or motor is required.

Plain type indicates standard motor and standard drive.

Underline indicates a different motor and drive combination other than the standard motor and standard drive combination is required. Refer to fan motor and drive tables to complete selection.

NOTES:

Maximum allowable fan speed is 1100 rpm for unit sizes 028 and 030; 1200 rpm for all other sizes. Fan performance is based on deductions for wet coil, clean 2–in. filters, and unit casing. See table below for factory–supplied filter pressure drop. For 60 Hz units, the medium–static drive and standard motor combination is not available for 028 size.

FAN PERFORMANCE DATA — 40RUA
0-300 Pa ESP — 60 Hz, SI

UNIT 40RUA)	AIRFLOW (L/s)	EXTERNAL STATIC PRESSURE (Pa)													
		0		50		100		150		200		250		300	
		r/s	kW	r/s	kW	r/s	kW	r/s	kW	r/s	kW	r/s	kW	r/s	kW
07	**850**	**6.98**	**0.16**	7.86	0.19	9.40	0.27	10.81	0.37	12.11	0.47	13.29	0.57	14.36	0.69
	990	7.84	0.23	8.64	0.27	10.03	0.36	11.31	0.46	12.52	0.57	13.65	0.69	14.71	0.81
	1130	8.73	0.33	9.46	0.38	10.75	0.48	11.91	0.59	13.01	0.70	14.07	0.83	15.08	0.96
	1270	9.63	0.45	10.31	0.51	11.51	0.62	12.58	0.74	13.60	0.86	14.58	0.99	15.53	1.13
	1420	10.55	0.61	11.18	0.67	12.30	0.80	13.31	0.92	14.26	1.05	15.17	1.19	16.05	1.33
08	**1060**	**4.83**	**0.07**	**8.50**	**0.29**	9.91	0.38	11.15	0.48	12.32	0.59	13.44	0.71	14.50	0.83
	1230	**5.81**	**0.14**	9.35	0.41	10.67	0.52	11.81	0.63	12.88	0.74	13.90	0.87	14.89	1.00
	1420	9.65	0.52	10.35	0.59	11.59	0.71	12.66	0.84	13.64	0.97	14.57	1.10	15.47	1.24
	1600	10.76	0.74	11.39	0.81	12.54	0.96	13.55	1.10	14.48	1.24	15.34	1.39	16.17	1.53
	1770	11.74	0.97	12.32	1.06	13.40	1.22	14.37	1.38	15.25	1.53	16.07	1.69	16.86	1.85
12	**1420**	**7.02**	**0.26**	**9.86**	**0.54**	11.17	0.67	12.28	0.79	13.29	0.92	14.23	1.05	15.14	1.19
	1650	**10.44**	**0.73**	**11.06**	**0.80**	12.25	0.96	13.31	1.10	14.25	1.25	15.13	1.39	15.96	1.54
	1890	11.76	1.06	12.31	1.15	13.38	1.32	14.37	1.49	15.28	1.66	16.11	1.83	16.89	1.99
	2120	13.10	1.48	13.59	1.58	14.55	1.78	15.48	1.97	16.34	2.17	17.14	2.35	17.89	2.54
	2360	14.45	2.01	14.89	2.12	15.76	2.34	16.62	2.56	17.43	2.77	18.20	2.98	18.92	3.19
14	**1770**	**6.84**	**0.32**	**7.78**	**0.41**	9.46	0.62	10.82	0.83	12.02	1.05	13.13	1.28	14.19	1.53
	2030	**7.58**	**0.46**	**8.40**	**0.55**	9.98	0.78	11.31	1.03	12.47	1.27	13.52	1.52	14.51	1.78
	2360	**8.57**	**0.69**	9.27	0.79	10.68	1.04	11.96	1.31	13.09	1.60	14.11	1.88	15.05	2.17
	2690	9.59	0.99	10.20	1.10	11.44	1.36	12.64	1.66	13.74	1.98	14.74	2.30	15.65	2.63
	2950	10.40	1.28	10.96	1.39	12.09	1.67	13.21	1.98	14.27	2.33	15.25	2.68	16.15	3.03
16	**2120**	**7.28**	**0.45**	**8.05**	**0.54**	9.60	0.75	11.00	1.00	12.21	1.26	13.28	1.51	14.27	1.78
	2500	**8.32**	**0.71**	8.97	0.80	10.29	1.02	11.59	1.30	12.78	1.59	13.84	1.89	14.80	2.19
	2830	**9.25**	**1.00**	9.83	1.10	10.99	1.33	12.16	1.62	13.29	1.93	14.34	2.27	15.30	2.60
	3210	10.33	1.42	10.85	1.54	11.87	1.78	12.90	2.07	13.93	2.40	14.93	2.76	15.87	3.14
	3540	11.29	1.88	11.77	2.01	12.69	2.27	13.62	2.56	14.56	2.90	15.49	3.27	16.40	3.67
25	**2830**	**9.03**	**0.96**	**9.62**	**1.06**	**10.77**	**1.29**	11.94	1.56	13.08	1.87	14.15	2.20	15.12	2.54
	3300	**10.34**	**1.48**	**10.86**	**1.60**	11.85	1.85	12.84	2.12	13.85	2.45	14.84	2.80	15.78	3.18
	3780	11.67	2.17	12.14	2.31	13.02	2.58	13.88	2.87	14.75	3.20	15.63	3.56	16.50	3.96
	4250	13.01	3.05	13.44	3.21	14.23	3.51	15.00	3.82	15.77	4.16	16.54	4.53	17.32	4.94
	4720	14.36	4.15	14.75	4.32	15.48	4.66	16.18	4.99	16.87	5.35	17.56	5.73	18.26	6.14
28	**3540**	**7.94**	**1.04**	**8.51**	**1.18**	**9.65**	**1.48**	**10.73**	**1.79**	11.68	2.10	12.53	2.46	13.40	2.95
	4130	**9.08**	**1.59**	**9.57**	**1.75**	**10.55**	**2.10**	11.52	2.46	12.45	2.81	13.28	3.17	14.04	3.55
	4720	**10.24**	**2.33**	**10.68**	**2.51**	11.53	2.88	12.39	3.29	13.24	3.70	14.05	4.11	14.80	4.51
	5310	11.42	3.26	11.81	3.46	12.57	3.88	13.33	4.32	14.09	4.77	14.85	5.24	15.58	5.70
	5900	12.60	4.42	12.96	4.64	13.65	5.09	14.33	5.57	15.01	6.07	15.70	6.58	16.38	7.10
30	**4250**	**8.99**	**1.62**	**9.49**	**1.78**	**10.44**	**2.12**	11.39	2.49	12.32	2.86	13.18	3.22	13.95	3.59
	4960	**10.33**	**2.51**	**10.77**	**2.70**	11.59	3.08	12.40	3.49	13.22	3.92	14.03	4.35	14.79	4.78
	5660	11.68	3.68	12.07	3.90	12.81	4.33	13.52	4.77	14.23	5.25	14.95	5.74	15.66	6.23
	6370	13.04	5.18	13.40	5.42	14.07	5.90	14.71	6.39	15.34	6.90	15.97	7.44	16.61	7.98
	7080	14.42	7.05	14.74	7.31	15.36	7.84	15.94	8.38	16.51	8.93	17.08	9.51	17.65	10.10

LEGEND

ESP — External Static Pressure

Bold indicates field–supplied drive or motor is required.

Plain type indicates standard motor and standard drive.

Underline indicates a different motor and drive combination other than the standard motor and standard drive combination is required. Refer to fan motor and drive tables to complete selection.

NOTES:

Maximum allowable fan speed is 18.3 r/s for unit sizes 028 and 030; 20 r/s for all other sizes. Fan performance is based on deductions for wet coil, clean 51–mm filters, and unit casing. See table below for factory–supplied filter pressure drop. For 60 Hz units, the medium–static drive and standard motor combination is not available for 028 size.

FAN PERFORMANCE DATA — 40RUA
350-600 Pa ESP — 60 Hz, SI

UNIT 40RUA	AIRFLOW (L/s)	EXTERNAL STATIC PRESSURE (Pa)											
		350		400		450		500		550		600	
		r/s	kW	r/s	kW	r/s	kW	r/s	kW	r/s	kW	r/s	kW
07	850	15.34	0.80	16.25	0.92	17.10	1.03	17.90	1.16	**18.66**	**1.28**	**19.39**	**1.41**
	990	15.69	0.94	16.61	1.07	17.47	1.20	**18.28**	**1.33**	**19.04**	**1.47**	**19.77**	**1.61**
	1130	16.04	1.09	16.95	1.23	17.81	1.38	**18.63**	**1.53**	**19.40**	**1.67**	—	—
	1270	16.44	1.27	17.32	1.42	**18.17**	**1.58**	**18.97**	**1.74**	**19.75**	**1.90**	—	—
	1420	16.91	1.49	17.75	1.64	**18.56**	**1.81**	**19.34**	**1.97**	—	—	—	—
08	1060	15.50	0.96	16.43	1.10	17.31	1.23	18.14	1.37	18.93	1.51	19.68	1.66
	1230	15.84	1.14	16.75	1.28	17.62	1.43	18.45	1.58	19.24	1.74	—	—
	1420	16.34	1.38	17.19	1.54	18.01	1.70	18.81	1.86	19.59	2.03	—	—
	1600	16.97	1.69	17.76	1.85	18.52	2.02	19.27	2.19	—	—	—	—
	1770	17.61	2.01	18.35	2.18	19.07	2.35	19.77	2.53	—	—	—	—
12	1420	16.02	1.33	16.87	1.48	17.71	1.64	18.52	1.80	19.30	1.97	—	—
	1650	16.76	1.70	17.53	1.85	18.29	2.02	19.04	2.19	19.77	2.37	—	—
	1890	17.64	2.16	18.35	2.33	19.05	2.51	19.74	2.69	—	—	—	—
	2120	18.60	2.73	19.28	2.91	19.93	3.10	—	—	—	—	—	—
	2360	19.61	3.40	—	—	—	—	—	—	—	—	—	—
14	1770	15.21	1.78	16.19	2.06	17.13	2.34	18.04	2.64	**18.91**	**2.94**	**19.75**	**3.25**
	2030	15.46	2.05	16.37	2.33	17.26	2.63	18.12	2.94	**18.96**	**3.26**	**19.78**	**3.59**
	2360	15.94	2.46	16.78	2.77	17.60	3.08	**18.40**	**3.40**	**19.18**	**3.73**	**19.94**	**4.07**
	2690	16.51	2.95	17.32	3.28	18.09	3.62	**18.84**	**3.96**	**19.57**	**4.31**	—	—
	2950	16.99	3.39	17.78	3.74	**18.54**	**4.10**	**19.26**	**4.47**	**19.96**	**4.84**	—	—
16	2120	15.21	2.05	16.11	2.33	16.98	2.62	17.83	2.93	18.66	3.24	19.47	3.57
	2500	15.69	2.49	16.54	2.80	17.35	3.12	18.14	3.44	18.90	3.77	**19.64**	**4.11**
	2830	16.18	2.94	17.01	3.28	17.79	3.63	18.54	3.97	19.27	4.33	**19.97**	**4.69**
	3210	16.75	3.52	17.57	3.90	18.34	4.29	19.08	4.67	**19.78**	**5.06**	—	—
	3540	17.26	4.09	18.07	4.50	18.84	4.93	**19.57**	**5.35**	—	—	—	—
25	2830	16.01	2.88	16.85	3.22	17.64	3.56	18.39	3.91	19.12	4.26	—	—
	3300	16.67	3.57	17.50	3.96	18.28	4.36	19.03	4.75	19.73	5.15	—	—
	3780	17.35	4.39	18.17	4.82	18.95	5.27	19.68	5.72	—	—	—	—
	4250	18.11	5.37	18.88	5.83	19.63	6.31	—	—	—	—	—	—
	4720	18.96	6.58	19.67	7.05	—	—	—	—	—	—	—	—
28	3540	14.57	3.97	14.95	4.41	15.67	5.07	16.50	5.59	—	—	—	—
	4130	14.76	3.99	15.51	4.57	16.36	5.46	17.00	6.04	—	—	—	—
	4720	15.49	4.92	16.15	5.37	16.78	5.88	17.42	6.50	—	—	—	—
	5310	16.26	6.15	16.91	6.61	17.51	7.08	**18.10**	**7.58**	—	—	—	—
	5900	17.04	7.61	17.68	8.11	**18.28**	**8.62**	—	—	—	—	—	—
30	4250	14.68	4.00	15.38	4.49	16.12	5.14	17.00	6.15	—	—	—	—
	4960	15.51	5.20	16.17	5.63	16.80	6.09	17.41	6.61	—	—	—	—
	5660	16.35	6.72	17.01	7.21	17.64	7.69	**18.23**	**8.18**	—	—	—	—
	6370	17.24	8.54	17.87	9.10	—	—	—	—	—	—	—	—
	7080	18.22	10.70	—	—	—	—	—	—	—	—	—	—

LEGEND

ESP — External Static Pressure

Bold indicates field–supplied drive or motor is required.

Plain type indicates standard motor and standard drive.

Underline indicates a different motor and drive combination other than the standard motor and standard drive combination is required. Refer to fan motor and drive tables to complete selection.

NOTES:

Maximum allowable fan speed is 18.3 r/s for unit sizes 028 and 030; 20 r/s for all other sizes. Fan performance is based on deductions for wet coil, clean 51–mm filters, and unit casing. See table below for factory–supplied filter pressure drop. For 60 Hz units, the medium–static drive and standard motor combination is not available for 028 size.

PERFORMANCE DATA (cont.)

DUCT SOUND POWER LEVELS (Lw)

MODEL	SIZE	CFM	dB(A)	OCTAVE BAND CENTER FREQUENCY (Hz)						
				63	125	250	500	1000	2000	4000
40RUA	07	2,400	86.3	93.2	89.2	85.2	84.2	80.2	78.2	74.2
	08	3,000	88.3	95.3	91.3	87.3	86.3	82.3	80.3	76.3
	12	4,000	91.6	98.6	94.6	90.6	89.6	85.6	83.6	79.6
	14	5,000	91.1	97.3	93.3	89.3	90.3	84.3	82.3	78.3
	16	6,000	92.7	98.9	94.9	90.9	91.9	85.9	83.9	79.9
40RUS	08	3,000	88.3	95.3	91.3	87.3	86.3	82.3	80.3	76.3
	10	3,400	89.8	96.7	92.7	88.7	87.7	83.7	81.7	77.7
	12	4,000	91.6	98.6	94.6	90.6	89.6	85.6	83.6	79.6
	14	5,000	91.1	97.3	93.3	89.3	90.3	84.3	82.3	78.3
	16	6,000	92.7	98.9	94.9	90.9	91.9	85.9	83.9	79.9

LEGEND:

ASHRAE – American Society of Heating, Refrigerating and Air Conditioning, Inc.

HVAC – Heating, Ventilation and Air Conditioning

NOTES:

1. The above estimated sound power levels are based upon the ASHRAE calculation approach from the ASHRAE 1987 HVAC Systems and Applications handbook, Chapter 52.
2. Since this data is calculated, these sound power levels may be different than the actual sound power levels.
3. The acoustic center of the unit is located at the geometric center of the unit.

FACTORY-SUPPLIED FILTER PRESSURE DROP — English

SIZE	UNIT	AIRFLOW (Cfm)	PRESSURE DROP (in. wg)
07	40RUA	1,800 2,400 3,000	0.05 0.08 0.11
08	40RUA 40RUS	2,250 3,000 3,750	0.07 0.11 0.15
10*	40RUS	—	—
12	40RUA 40RUS	3,000 4,000 5,000	0.11 0.17 0.23
14	40RUA 40RUS	3,750 5,000 6,250	0.06 0.10 0.13
16	40RUA 40RUS	4,500 6,000 7,500	0.08 0.12 0.17
25	40RUA 40RUS	6,000 8,000 10,000	0.12 0.19 0.26
28	40RUA 40RUS	7,500 10,000 12,500	0.15 0.22 0.30
30	40RUA 40RUS	9,000 12,000 15,000	0.19 0.29 0.40

* Data not available.

FACTORY-SUPPLIED FILTER PRESSURE DROP — SI

SIZE	UNIT	AIRFLOW (L/s)	PRESSURE DROP (Pa)
07	40RUA	850 1150 1450	13 20 28
08	40RUA 40RUS	1000 1400 1800	17 27 38
10*	40RUS	—	—
12	40RUA 40RUS	1450 1900 2350	28 42 56
14	40RUA 40RUS	1750 2350 2950	15 24 33
16	40RUA 40RUS	2100 2800 3500	20 30 42
25	40RUA 40RUS	2900 3800 4700	32 47 64
28	40RUA 40RUS	3500 4700 5900	36 55 76
30	40RUA 40RUS	4250 5650 7050	47 71 98

* Data not available.

PERFORMANCE DATA (cont.)

ACCESSORY PLENUM AIR THROW DATA — English (Ft)

UNIT	AIRFLOW (Cfm)	VANE DEFLECTION		
		Straight	21∫°	45°
40RUA 07	2,400	39	33	24
40RUA 40RUS 08	3,000	45	38	28
40RUS 10	3,400	49	41	30
40RUA 40RUS 12	4,000	55	46	33
40RUA 40RUS 14	5,000	45	38	28
40RUA 40RUS 16	6,000	50	43	31
40RUA 40RUS 25	8,000	60	51	37
40RUA 40RUS 28	10,000	76	65	47
40RUA 40RUS 30	12,000	85	72	52

NOTE: Throw distances shown are for 75 fpm terminal velocity. Use the following multipliers to determine throw values for other terminal velocities.

TERMINAL VELOCITY (Fpm)	THROW FACTOR
50	X 1.50
100	X 0.75
150	X 0.50

ACCESSORY PLENUM AIR THROW DATA — SI(m)

UNIT	AIRFLOW (L/s)	VANE DEFLECTION		
		Straight	21∫°	45°
40RUA 07	1150	11.71	9.91	7.20
40RUA 40RUS 08	1400	13.87	11.71	8.63
40RUS 10	1600	14.98	12.53	9.17
40RUA 40RUS 12	1900	16.65	13.93	9.99
40RUA 40RUS 14	2350	13.77	11.63	8.57
40RUA 40RUS 16	2800	15.41	13.25	9.55
40RUA 40RUS 25	3800	18.17	15.44	11.20
40RUA 40RUS 28	4700	23.26	19.89	14.38
40RUA 40RUS 30	5650	25.97	22.00	15.89

NOTE: Throw distances shown are for 0.381 m/sec terminal velocity. Use the following multipliers to determine throw values for other terminal velocities.

TERMINAL VELOCITY (m/sec)	THROW FACTOR
0.254	X 1.50
0.508	X 0.75
0.762	X 0.50

PERFORMANCE DATA (cont.)

ACCESSORY PRESSURE DROP — English (in. wg)

UNIT	AIRFLOW (Cfm)	DISCHARGE PLENUM	RETURN AIR GRILLE	Hot Water	Steam	Electric	ECONOMIZER
40RUA 07	1,800	0.06	0.01	0.10	0.10	0.04	0.05
	2,400	0.10	0.01	0.16	0.16	0.06	0.07
	3,000	0.14	0.02	0.23	0.23	0.10	0.09
40RUA/S 08	2,250	0.09	0.01	0.15	0.15	0.06	0.06
	3,000	0.14	0.02	0.23	0.23	0.10	0.09
	3,750	0.21	0.03	0.35	0.35	0.15	0.15
40RUS 10	2,550	0.11	0.02	0.18	0.18	0.07	0.07
	3,400	0.17	0.03	0.28	0.28	0.12	0.13
	4,250	0.24	0.04	0.41	0.41	0.19	0.19
40RUA/S 12	3,000	0.14	0.02	0.23	0.23	0.10	0.09
	4,000	0.22	0.04	0.37	0.37	0.17	0.17
	5,000	0.32	0.06	0.53	0.53	0.26	0.28
40RUA/S 14	3,750	0.07	0.01	0.11	0.11	0.04	0.05
	5,000	0.12	0.02	0.17	0.17	0.07	0.07
	6,250	0.17	0.02	0.25	0.25	0.11	0.11
40RUA/S 16	4,500	0.10	0.01	0.15	0.15	0.06	0.06
	6,000	0.16	0.02	0.23	0.23	0.10	0.09
	7,500	0.23	0.03	0.33	0.33	0.15	0.15
40RUA/S 25	6,000	0.16	0.02	0.23	0.23	0.10	0.09
	8,000	0.26	0.04	0.37	0.37	0.17	0.17
	10,000	0.37	0.06	0.53	0.53	0.26	0.28
40RUA/S 28	7,500	0.15	0.02	0.28	0.28	0.09	0.06
	10,000	0.24	0.03	0.44	0.44	0.16	0.09
	12,500	0.34	0.05	0.63	0.63	0.24	0.14
40RUA/S 30	9,000	0.20	0.03	0.37	0.37	0.13	0.08
	12,000	0.32	0.05	0.59	0.59	0.22	0.14
	15,000	0.46	0.07	0.85	0.85	0.34	0.21

ACCESSORY PRESSURE DROP — SI (Pa)

UNIT	AIRFLOW (L/s)	DISCHARGE PLENUM	RETURN AIR GRILLE	HEATING COILS			ECONOMIZER
				Hot Water	Steam	Electric	
40RUA 07	850	15	2	25	25	9	12
	1150	25	3	41	41	16	18
	1450	36	5	60	60	26	23
40RUA/S 08	1000	20	2	33	33	12	13
	1400	34	5	57	57	24	22
	1800	51	8	85	85	39	39
40RUS 10	1200	26	5	44	44	18	17
	1600	42	7	70	70	31	32
	2000	61	10	101	101	48	47
40RUA/S 12	1450	36	5	60	60	26	23
	1900	56	10	93	93	43	43
	2350	79	15	132	132	65	69
40RUA/S 14	1750	18	2	26	26	10	12
	2350	29	5	43	43	17	17
	2950	43	5	62	62	26	27
40RUA/S 16	2100	24	2	36	36	14	15
	2800	39	5	57	57	24	22
	3500	56	7	82	82	37	37
40RUA/S 25	2900	41	5	60	60	26	23
	3800	64	10	93	93	43	43
	4700	91	15	132	132	65	69
40RUA/S 28	3500	37	5	67	67	22	15
	4700	59	7	109	109	39	22
	5900	86	12	157	157	60	35
40RUA/S 30	4250	50	7	92	92	32	20
	5650	80	12	147	147	56	35
	7050	114	17	210	210	85	52

ELECTRICAL DATA

STANDARD MOTORS

UNIT	V*-PH-Hz	VOLTAGE LIMITS	FAN MOTOR		POWER SUPPLY	
			Hp (kW)	FLA	Minimum Circuit Amps	MOCP
40RUA 07	208/230-1-60	187-253	1.3 (0.97)	7.6	9.5	15
	208/230-3-60	187-253	2.4 (1.79)	5.8	7.5	15
	460-3-60	414-506	2.4 (1.79)	2.6	3.3	15
	575-3-60	518-632	1.0 (0.75)	1.4	1.7	15
40RUA/S 08	208/230-1-60	187-253	2.4 (1.79)	11.0	13.8	20
	208/230-3-60	187-253	2.4 (1.79)	5.8	6.5	15
	460-3-60	414-506	2.4 (1.79)	2.6	3.3	15
	575-3-60	518-632	2.0 (1.49)	2.4	3.0	15
40RUS 10	208/230-1-60	187-253	2.4 (1.79)	11.0	13.8	20
	208/230-3-60	187-253	2.4 (1.79)	5.2	6.5	15
	460-3-60	414-506	2.4 (1.79)	2.6	3.3	15
	575-3-60	518-632	2.0 (1.49)	2.3	2.9	15
40RUA/S 12	208/230-3-60	187-253	2.4 (1.79)	5.8	7.3	15
	460-3-60	414-506	2.4 (1.79)	2.6	3.3	15
	575-3-60	518-632	2.0 (1.49)	2.4	3.0	15
40RUA/S 14	208/230-3-60	187-253	2.4 (1.79)	5.8	7.5	15
	460-3-60	414-506	2.4 (1.79)	2.6	3.3	15
	575-3-60	518-632	3.0 (2.24)	3.8	4.8	15
40RUA/S 16	208/230-3-60	187-253	3.7 (2.76)	10.6	13.3	20
	460-3-60	414-506	3.7 (2.76)	4.8	6.0	15
	575-3-60	518-632	3.0 (2.24)	3.8	4.8	15
40RUA/S 25	208/230-3-60	187-253	5.0 (3.73)	14.6/12.8	18.3/16.0	30/25
	460-3-60	414-506	5.0 (3.73)	6.4	8.0	15
	575-3-60	518-632	5.0 (3.73)	5.1	6.4	15
40RUA/S 28	208/230-3-60	187-253	7.5 (5.59)	21.5/19.4	26.9/24.3	45/40
	460-3-60	414-506	7.5 (5.59)	9.7	12.1	20
	575-3-60	518-632	7.5 (5.59)	7.8	9.8	15
40RUA/S 30	208/230-3-60	187-253	10.0 (7.46)	28.2/26.8	35.3/33.5	60/60
	460-3-60	414-506	10.0 (7.46)	13.4	16.8	30
	575-3-60	518-632	10.0 (7.46)	10.3	12.9	20

LEGEND

FLA — Full Load Amps

MOCP — Maximum Overcurrent Protection

* Motors are designed for satisfactory operation within 10% of nominal voltages shown. Voltages should not exceed the limits shown in the Voltage Limits column.

NOTES:

1. Minimum circuit amps (MCA) and MOCP values are calculated in accordance with NEC (National Electrical Code) (U.S.A. standard), Article 440.
2. Motor FLA values are established in accordance with UL (Underwriters' Laboratories) Standard 1995 (U.S.A. standard).
3. Indoor fan motors 5 hp and larger meet the minimum efficiency requirements as established by the Energy Policy Act of 1992 (EPACT) effective October 24, 1997.
4. Unbalanced 3–Phase Supply Voltage
   Never operate a motor where a phase imbalance in supply voltage is greater than 2%. Use the following formula to determine the percentage of voltage imbalance.

$$\text{\% Voltage Imbalance} = 100 \times \frac{\text{max voltage deviation from average voltage}}{\text{average voltage}}$$

Example: Supply voltage is 230-3-60

AB = 224 v
BC = 231 v
AC = 226 v

$$\text{Average Voltage} = \frac{(224 + 231 + 226)}{3} = \frac{681}{3}$$

$$= 227$$

Determine maximum deviation from average voltage.
(AB) 227 – 224 = 3 v
(BC) 231 – 227 = 4 v
(AC) 227 – 226 = 1 v
Maximum deviation is 4 v.
Determine percent of voltage imbalance.

$$\text{\% Voltage Imbalance} = 100 \times \frac{4}{227}$$

$$= 1.76\%$$

This amount of phase imbalance is satisfactory as it is below the maximum allowable 2%.

IMPORTANT: If the supply voltage phase imbalance is more than 2%, contact your local electric utility company immediately.

40RU

ALTERNATE MOTORS

UNIT	V*-PH-Hz	VOLTAGE LIMITS	FAN MOTOR		POWER SUPPLY	
			Hp (kW)	FLA	Minimum Circuit Amps	MOCP
40RUA 07	208/230-1-60	187-253	2.4 (1.79)	11.0	13.8	20
	208/230-3-60	187-253	2.9 (2.16)	7.5	9.4	15
	460-3-60	414-506	2.9 (2.16)	3.4	4.3	15
	575-3-60	518-632	2.0 (1.49)	2.3	2.9	15
40RUA/S 08	208/230-1-60	187-253	2.4 (1.79)	11.0	13.8	15
	208/230-3-60	187-253	2.9 (2.16)	7.5	9.4	15
	460-3-60	414-506	2.9 (2.16)	3.4	4.3	15
	575-3-60	518-632	3.0 (2.24)	3.8	4.8	15
40RUS 10	208/230-1-60	187-253	2.4 (1.79)	11.0	13.8	20
	208/230-3-60	187-253	2.9 (2.16)	7.5	9.4	15
	460-3-60	414-506	2.9 (2.16)	3.4	4.3	15
	575-3-60	518-632	3.0 (2.24)	3.8	4.8	15
40RUA/S 12	208/230-3-60	187-253	3.7 (2.76)	10.2	12.8	20
	460-3-60	414-506	3.7 (2.76)	4.8	6.0	15
	575-3-60	518-632	3.0 (2.24)	3.8	4.8	15
40RUA/S 14	208/230-3-60	187-253	3.7 (2.76)	10.2	12.7	20
	460-3-60	414-506	3.7 (2.76)	4.8	6.0	15
	575-3-60	518-632	5.0 (3.73)	5.1	6.4	15
40RUA/S 16	208/230-3-60	187-253	5.0 (3.73)	14.6/12.8	18.3/16.0	30/25
	460-3-60	414-506	5.0 (3.73)	6.4	8.0	15
	575-3-60	518-632	5.0 (3.73)	5.1	6.4	15
40RUA/S 25	208/230-3-60	187-253	7.5 (5.59)	21.5/19.4	26.9/24.3	45/40
	460-3-60	414-506	7.5 (5.59)	9.7	12.1	20
	575-3-60	518-632	7.5 (5.59)	7.8	9.8	15
40RUA/S 28	208/230-3-60	187-253	10.0 (7.46)	28.2/26.8	35.3/33.5	60/60
	460-3-60	414-506	10.0 (7.46)	13.4	16.8	30
	575-3-60	518-632	10.0 (7.46)	10.3	12.9	20

LEGEND

FLA — Full Load Amps

MOCP — Maximum Overcurrent Protection

* Motors are designed for satisfactory operation within 10% of nominal voltages shown. Voltages should not exceed the limits shown in the Voltage Limits column.

NOTES:

1. Minimum circuit amps (MCA) and MOCP values are calculated in accordance with NEC (National Electrical Code) (U.S.A. standard), Article 440.
2. Motor FLA values are established in accordance with UL (Underwriters' Laboratories) Standard 1995 (U.S.A. standard).
3. Indoor fan motors 5 hp and larger meet the minimum efficiency requirements as established by the Energy Policy Act of 1992 (EPACT) effective October 24, 1997.
4. Unbalanced 3–Phase Supply Voltage
   Never operate a motor where a phase imbalance in supply voltage is greater than 2%. Use the following formula to determine the percentage of voltage imbalance.

$$\text{\% Voltage Imbalance} = 100 \times \frac{\text{max voltage deviation from average voltage}}{\text{average voltage}}$$

Example: Supply voltage is 230-3-60

AB = 224 v
BC = 231 v
AC = 226 v

$$\text{Average Voltage} = \frac{(224 + 231 + 226)}{3} = \frac{681}{3}$$

$$= 227$$

Determine maximum deviation from average voltage.
(AB) 227 – 224 = 3 v
(BC) 231 – 227 = 4 v
(AC) 227 – 226 = 1 v
Maximum deviation is 4 v.
Determine percent of voltage imbalance.

$$\text{\% Voltage Imbalance} = 100 \times \frac{4}{227}$$

$$= 1.76\%$$

This amount of phase imbalance is satisfactory as it is below the maximum allowable 2%.

IMPORTANT: If the supply voltage phase imbalance is more than 2%, contact your local electric utility company immediately.

ELECTRIC HEATER DATA

HEATER PART NO. CAELHEAT	SIZE	V-PH-Hz	FAN MOTOR Hp	FAN MOTOR kW	FAN MOTOR FLA	ELECTRIC HEATER(S) Nominal Capacity (kW)	Actual Capacity (kW) Stage 1	Actual Capacity (kW) Stage 2	Actual Capacity (kW) Total	FLA	MCA*	MOCP*
001A00	40RUA 07–12 40RUS 08–12	208-3-60	1.3†	0.97	7.6	5	3.8	—	3.8	10.4	22.5	25
			2.4†	1.79	11.0	5	3.8	—	3.8	10.4	26.8	35
			2.4	1.79	5.2	5	3.8	—	3.8	10.4	19.5	20
			2.9	2.16	7.5	5	3.8	—	3.8	10.4	22.4	25
			3.7	2.76	10.2	5	3.8	—	3.8	10.4	25.8	30
		240-3-60	1.3†	0.97	7.6	5	5.0	—	5.0	12.0	24.5	25
			2.4†	1.79	11.0	5	5.0	—	5.0	12.0	28.8	35
			2.4	1.79	5.2	5	5.0	—	5.0	12.0	21.5	25
			2.9	2.16	7.5	5	5.0	—	5.0	12.0	24.4	25
			3.7	2.76	10.2	5	5.0	—	5.0	12.0	27.8	30
002A00		480-3-60	2.4	1.79	2.6	5	5.0	—	5.0	6.00	10.8	15
			2.9	2.16	3.4	5	5.0	—	5.0	6.00	11.8	15
			3.7	2.76	4.8	5	5.0	—	5.0	6.00	13.5	15
003A00		575-3-60	1.0	0.75	1.4	5	5.0	—	5.0	5.00	8.0	15
			2.0	1.49	2.3	5	5.0	—	5.0	5.00	9.2	15
			3.0	2.24	3.8	5	5.0	—	5.0	5.00	11.0	15
004A00		208-3-60	1.3†	0.97	7.6	10	7.5	—	7.5	20.8	35.6	40
			2.4†	1.79	11.0	10	7.5	—	7.5	20.8	39.8	40
			2.4	1.79	5.2	10	7.5	—	7.5	20.8	32.6	35
			2.9	2.16	7.5	10	7.5	—	7.5	20.8	35.4	40
			3.7	2.76	10.2	10	7.5	—	7.5	20.8	38.8	40
		240-3-60	1.3†	0.97	7.6	10	10.0	—	10.0	24.1	39.6	40
			2.4†	1.79	11.0	10	10.0	—	10.0	24.1	43.8	50
			2.4	1.79	5.2	10	10.0	—	10.0	24.1	36.6	40
			2.9	2.16	7.5	10	10.0	—	10.0	24.1	39.4	40
			3.7	2.76	10.2	10	10.0	—	10.0	24.1	42.8	50
005A00		480-3-60	2.4	1.79	2.6	10	10.0	—	10.0	12.0	18.3	20
			2.9	2.16	3.4	10	10.0	—	10.0	12.0	19.3	20
			3.7	2.76	4.8	10	10.0	—	10.0	12.0	21.0	25
006A00		575-3-60	1.0	0.75	1.4	10	10.0	—	10.0	10.0	14.3	15
			2.0	1.49	2.3	10	10.0	—	10.0	10.0	15.4	20
			3.0	2.24	3.8	10	10.0	—	10.0	10.0	17.3	20
007A00		208-3-60	1.3†	0.97	7.6	15	11.3	—	11.3	31.3	48.6	50
			2.4†	1.79	11.0	15	11.3	—	11.3	31.3	52.9	60
			2.4	1.79	5.2	15	11.3	—	11.3	31.3	45.6	50
			2.9	2.16	7.5	15	11.3	—	11.3	31.3	48.5	50
			3.7	2.76	10.2	15	11.3	—	11.3	31.3	51.9	60
		240-3-60	1.3†	0.97	7.6	15	15.0	—	15.0	36.1	54.6	60
			2.4†	1.79	11.0	15	15.0	—	15.0	36.1	58.9	60
			2.4	1.79	5.2	15	15.0	—	15.0	36.1	51.6	60
			2.9	2.16	7.5	15	15.0	—	15.0	36.1	54.5	60
			3.7	2.76	10.2	15	15.0	—	15.0	36.1	57.9	60

LEGEND

FLA — Full Load Amps
Hp — Horsepower
MCA — Minimum Circuit Amps
MOCP — Maximum Overcurrent Protection (Amps)

* Values shown are for single-point connection of electric heat accessory and air handler.

† Single-phase motors. All other motors are 3-phase.

NOTES:

1. Electrical resistance heaters are rated at 240 v, 480 v, or 575 v. To determine heater capacity (kW) at unit nameplate multiply the 240-v, 480-v, or 575-v capacity (kW) by the factor shown in the table below for the unit voltage.

HEATER RATING VOLTAGE	ACTUAL HEATER VOLTAGE 200	208	230	240	400	440	460	480	550	575	600
240	0.694	0.751	0.918	1	—	—	—	—	—	—	—
480	—	—	—	—	0.694	0.84	0.918	1	—	—	—
575	—	—	—	—	—	—	—	—	0.915	1	1.089

2. The following equation converts kW of heat energy to Btuh: kW x 3,412 = Btuh.
3. Heater contactor coils are 24 v and require 8 va holding current.
4. Electric heaters are tested and ETL approved at maximum total external static pressure of 1.9 in. wg.
5. MCA and MOCP values apply to both standard and alternate factory-supplied motors.
6. Approximate shipping weight for CAELHEAT001A00-015A00 is 55 lb (25 kg) each. Approximate shipping weight for CAELHEAT016A00-027A00 is 60 lb (27 kg) each, and CAELHEAT028A00-039A00 is 75 lb (34 kg) each.

ELECTRICAL DATA (cont.)

ELECTRIC HEATER DATA (cont.)

HEATER PART NO. CAELHEAT	SIZE	V-PH-Hz	FAN MOTOR			ELECTRIC HEATER(S)					MCA*	MOCP*
						Nominal Capacity (kW)	Actual Capacity (kW)			FLA		
			Hp	kW	FLA		Stage 1	Stage 2	Total			
008A00	40RUA 07–12 40RUS 08–12	480-3-60	2.4	1.79	2.6	15	15.0	—	15.0	18.0	25.8	30
			2.9	2.16	3.4	15	15.0	—	15.0	18.0	26.8	30
			3.7	2.76	4.8	15	15.0	—	15.0	18.0	28.6	30
009A00		575-3-60	1.0	0.75	1.4	15	15.0	—	15.0	15.1	20.6	25
			2.0	1.49	2.3	15	15.0	—	15.0	15.1	21.7	25
			3.0	2.24	3.8	15	15.0	—	15.0	15.1	23.6	25
010A00		208-3-60	1.3†	0.97	7.6	25	11.3	7.5	18.8	52.1	74.7	80
			2.4†	1.79	11.0	25	11.3	7.5	18.8	52.1	78.9	80
			2.4	1.79	5.2	25	11.3	7.5	18.8	52.1	71.7	80
			2.9	2.16	7.5	25	11.3	7.5	18.8	52.1	74.5	80
			3.7	2.76	10.2	25	11.3	7.5	18.8	52.1	77.9	80
		240-3-60	1.3†	0.97	7.6	25	15.0	10.0	25.0	60.1	84.7	90
			2.4†	1.79	11.0	25	15.0	10.0	25.0	60.1	88.9	90
			2.4	1.79	5.2	25	15.0	10.0	25.0	60.1	81.7	90
			2.9	2.16	7.5	25	15.0	10.0	25.0	60.1	84.6	90
			3.7	2.76	10.2	25	15.0	10.0	25.0	60.1	87.9	90
011A00		480-3-60	2.4	1.79	2.6	25	15.0	10.0	25.0	30.1	40.8	50
			2.9	2.16	3.4	25	15.0	10.0	25.0	30.1	41.8	50
			3.7	2.76	4.8	25	15.0	10.0	25.0	30.1	43.6	50
012A00		575-3-60	1.0	0.75	1.4	25	15.0	10.0	25.0	25.1	33.1	35
			2.0	1.49	2.3	25	15.0	10.0	25.0	25.1	34.3	35
			3.0	2.24	3.8	25	15.0	10.0	25.0	25.1	36.1	40
013A00	40RUA 08,12 40RUS 08–12	208-3-60	2.4†	1.79	11.0	35	15.0	11.3	26.3	73.0	105.0	110
			2.4	1.79	5.2	35	15.0	11.3	26.3	73.0	97.7	100
			2.9	2.16	7.5	35	15.0	11.3	26.3	73.0	100.6	110
			3.7	2.76	10.2	35	15.0	11.3	26.3	73.0	104.0	110
		240-3-60	2.4†	1.79	11.0	35	20.0	15.0	35.0	84.2	119.0	125
			2.4	1.79	5.2	35	20.0	15.0	35.0	84.2	111.7	125
			2.9	2.16	7.5	35	20.0	15.0	35.0	84.2	114.6	125
			3.7	2.76	10.2	35	20.0	15.0	35.0	84.2	118.0	125
014A00		480-3-60	2.4	1.79	2.6	35	20.0	15.0	35.0	42.1	55.9	60
			2.9	2.16	3.4	35	20.0	15.0	35.0	42.1	56.9	60
			3.7	2.76	4.8	35	20.0	15.0	35.0	42.1	58.6	60
015A00		575-3-60	2.0	1.49	2.3	35	20.0	15.0	35.0	35.1	46.8	50
			3.0	2.24	3.8	35	20.0	15.0	35.0	35.1	48.7	50

LEGEND

FLA — Full Load Amps
Hp — Horsepower
MCA — Minimum Circuit Amps
MOCP — Maximum Overcurrent Protection (Amps)

* Values shown are for single-point connection of electric heat accessory and air handler.

† Single-phase motors. All other motors are 3-phase.

NOTES:

1. Electrical resistance heaters are rated at 240 v, 480 v, or 575 v. To determine heater capacity (kW) at unit nameplate multiply the 240-v, 480-v, or 575-v capacity (kW) by the factor shown in the table below for the unit voltage.

HEATER RATING VOLTAGE	ACTUAL HEATER VOLTAGE										
	200	208	230	240	400	440	460	480	550	575	600
240	0.694	0.751	0.918	1	—	—	—	—	—	—	—
480	—	—	—	—	0.694	0.84	0.918	1	—	—	—
575	—	—	—	—	—	—	—	—	0.915	1	1.089

2. The following equation converts kW of heat energy to Btuh: kW x 3,412 = Btuh.
3. Heater contactor coils are 24 v and require 8 va holding current.
4. Electric heaters are tested and ETL approved at maximum total external static pressure of 1.9 in. wg.
5. MCA and MOCP values apply to both standard and alternate factory-supplied motors.
6. Approximate shipping weight for CAELHEAT001A00-015A00 is 55 lb (25 kg) each. Approximate shipping weight for CAELHEAT016A00-027A00 is 60 lb (27 kg) each, and CAELHEAT028A00-039A00 is 75 lb (34 kg) each.

ELECTRICAL DATA (cont.)

ELECTRIC HEATER DATA (cont.)

HEATER PART NO. CAELHEAT	SIZE	V-PH-Hz	FAN MOTOR Hp	FAN MOTOR kW	FAN MOTOR FLA	ELECTRIC HEATER(S) Nominal Capacity (kW)	Actual Capacity (kW) Stage 1	Actual Capacity (kW) Stage 2	Actual Capacity (kW) Total	FLA	MCA*	MOCP*
016A00	40RUA 14–25 40RUS 14–25	208-3-60	2.9	2.16	7.5	10	7.5	—	7.5	20.8	35.4	40
			3.7	2.76	10.2	10	7.5	—	7.5	20.8	38.8	40
			5.0	3.73	14.6	10	7.5	—	7.5	20.8	41.3	50
		240-3-60	2.9	2.16	7.5	10	10.0	—	10.0	24.1	39.4	40
			3.7	2.76	10.2	10	10.0	—	10.0	24.1	42.8	50
			5.0	3.73	12.8	10	10.0	—	10.0	24.1	46.1	50
017A00		480-3-60	2.9	2.16	3.4	10	10.0	—	10.0	12.0	19.3	20
			3.7	2.76	4.8	10	10.0	—	10.0	12.0	21.0	25
			5.0	3.73	6.4	10	10.0	—	10.0	12.0	23.0	25
018A00		575-3-60	3.0	2.24	3.8	10	10.0	—	10.0	10.0	17.3	20
			5.0	3.73	5.1	10	10.0	—	10.0	10.0	19.6	20
019A00		208-3-60	2.9	2.16	7.5	20	14.9	—	14.9	41.5	51.2	70
			3.7	2.76	10.2	20	14.9	—	14.9	41.5	64.6	70
			5.0	3.73	14.6	20	14.9	—	14.9	41.5	70.1	80
		240-3-60	2.9	2.16	7.5	20	19.9	—	19.9	47.9	69.2	70
			3.7	2.76	10.2	20	19.9	—	19.9	47.9	72.6	80
			5.0	3.73	12.8	20	19.9	—	19.9	47.9	75.8	80
020A00		480-3-60	2.9	2.16	3.4	20	20.0	—	20.0	24.1	34.3	35
			3.7	2.76	4.8	20	20.0	—	20.0	24.1	36.1	40
			5.0	3.73	6.4	20	20.0	—	20.0	24.1	39.1	40
021A00		575-3-60	3.0	2.24	3.8	20	20.0	—	20.0	20.1	29.9	30
			5.0	3.73	5.1	20	20.0	—	20.0	20.1	31.5	35
022A00		208-3-60	2.9	2.16	7.5	30	15.0	7.5	22.5	62.5	87.5	90
			3.7	2.76	10.2	30	15.0	7.5	22.5	62.5	90.9	100
			5.0	3.73	14.6	30	15.0	7.5	22.5	62.5	96.4	100
		240-3-60	2.9	2.16	7.5	30	20.0	10.0	30.0	72.2	99.6	100
			3.7	2.76	10.2	30	20.0	10.0	30.0	72.2	103.0	110
			5.0	3.73	12.8	30	20.0	10.0	30.0	72.2	106.2	110
023A00		480-3-60	2.9	2.16	3.4	30	20.0	10.0	30.0	36.1	49.4	50
			3.7	2.76	4.8	30	20.0	10.0	30.0	36.1	51.1	60
			5.0	3.73	6.4	30	20.0	10.0	30.0	36.1	53.1	60
024A00		575-3-60	3.0	2.24	3.8	30	20.0	10.0	30.0	30.1	42.4	50
			5.0	3.73	5.1	30	20.0	10.0	30.0	30.1	44.0	50

LEGEND

FLA — Full Load Amps
Hp — Horsepower
MCA — Minimum Circuit Amps
MOCP — Maximum Overcurrent Protection (Amps)

* Values shown are for single-point connection of electric heat accessory and air handler.
† Single-phase motors. All other motors are 3-phase.

NOTES:

1. Electrical resistance heaters are rated at 240 v, 480 v, or 575 v. To determine heater capacity (kW) at unit nameplate multiply the 240-v, 480-v, or 575-v capacity (kW) by the factor shown in the table below for the unit voltage.

HEATER RATING VOLTAGE	ACTUAL HEATER VOLTAGE 200	208	230	240	400	440	460	480	550	575	600
240	0.694	0.751	0.918	1	—	—	—	—	—	—	—
480	—	—	—	—	0.694	0.84	0.918	1	—	—	—
575	—	—	—	—	—	—	—	—	0.915	1	1.089

2. The following equation converts kW of heat energy to Btuh: kW x 3,412 = Btuh.
3. Heater contactor coils are 24 v and require 8 va holding current.
4. Electric heaters are tested and ETL approved at maximum total external static pressure of 1.9 in. wg.
5. MCA and MOCP values apply to both standard and alternate factory-supplied motors.
6. Approximate shipping weight for CAELHEAT001A00-015A00 is 55 lb (25 kg) each. Approximate shipping weight for CAELHEAT016A00-027A00 is 60 lb (27 kg) each, and CAELHEAT028A00-039A00 is 75 lb (34 kg) each.

ELECTRICAL DATA (cont.)

ELECTRIC HEATER DATA (cont.)

HEATER PART NO. CAELHEAT	SIZE	V-PH-Hz	FAN MOTOR Hp	FAN MOTOR kW	FAN MOTOR FLA	ELECTRIC HEATER(S) Nominal Capacity (kW)	Actual Capacity (kW) Stage 1	Actual Capacity (kW) Stage 2	Actual Capacity (kW) Total	FLA	MCA*	MOCP*
025A00	40RUA 16, 25 40RUS 16, 25	208-3-60	3.7	2.76	10.2	50	22.6	15.0	37.6	104.3	143.1	150
			5.0	3.73	14.6	50	22.6	15.0	37.6	104.3	148.6	150
			7.5	5.59	21.5	50	22.6	15.0	37.6	104.3	157.2	175
		240-3-60	3.7	2.76	10.2	50	30.0	20.0	50.0	120.3	163.1	175
			5.0	3.73	12.8	50	30.0	20.0	50.0	120.3	166.4	175
			7.5	5.59	19.4	50	30.0	20.0	50.0	120.3	174.6	200
026A00		480-3-60	3.7	2.76	4.8	50	30.0	20.0	50.0	60.1	81.2	90
			5.0	3.73	6.4	50	30.0	20.0	50.0	60.1	83.2	90
			7.5	5.59	9.7	50	30.0	20.0	50.0	60.1	87.3	90
027A00		575-3-60	3.0	2.24	3.8	50	30.0	20.0	50.0	50.2	67.5	70
			5.0	3.73	5.1	50	30.0	20.0	50.0	50.2	69.1	70
			7.5	5.59	7.8	50	30.0	20.0	50.0	50.2	72.5	80
028A00	40RUA 28, 30 40RUS 28, 30	208-3-60	7.5	5.59	19.8	20	14.9	—	14.9	41.5	78.7	80
			10.0	7.46	28.2	20	14.9	—	14.9	41.5	87.1	100
		240-3-60	7.5	5.59	19.4	20	19.9	—	19.9	47.9	81.4	90
			10.0	7.46	26.8	20	19.9	—	19.9	47.9	93.3	110
029A00		480-3-60	7.5	5.59	9.7	20	20.0	—	20.0	24.1	42.2	50
			10.0	7.46	13.4	20	20.0	—	20.0	24.1	46.8	50
030A00		575-3-60	7.5	5.59	7.8	20	20.0	—	20.0	20.1	34.9	35
			10.0	7.46	10.3	20	20.0	—	20.0	20.1	38.0	40
031A00		208-3-60	7.5	5.59	19.8	40	15.0	15.0	30.0	83.4	131.1	150
			10.0	7.46	28.0	40	15.0	15.0	30.0	83.4	139.5	150
		240-3-60	7.5	5.59	19.4	40	20.0	20.0	40.0	96.2	144.5	150
			10.0	7.46	26.8	40	20.0	20.0	40.0	96.2	153.8	175
032A00		480-3-60	7.5	5.59	9.7	40	20.0	20.0	40.0	47.9	71.9	80
			10.0	7.46	13.4	40	20.0	20.0	40.0	47.9	76.6	80
033A00		575-3-60	7.5	5.59	7.8	40	20.0	20.0	40.0	40.2	60.0	60
			10.0	7.46	10.3	40	20.0	20.0	40.0	40.2	63.1	70

LEGEND

FLA — Full Load Amps
Hp — Horsepower
MCA — Minimum Circuit Amps
MOCP — Maximum Overcurrent Protection (Amps)

* Values shown are for single-point connection of electric heat accessory and air handler.

† Single-phase motors. All other motors are 3-phase.

NOTES:

1. Electrical resistance heaters are rated at 240 v, 480 v, or 575 v. To determine heater capacity (kW) at unit nameplate multiply the 240-v, 480-v, or 575-v capacity (kW) by the factor shown in the table below for the unit voltage.

HEATER RATING VOLTAGE	ACTUAL HEATER VOLTAGE 200	208	230	240	400	440	460	480	550	575	600
240	0.694	0.751	0.918	1	—	—	—	—	—	—	—
480	—	—	—	—	0.694	0.84	0.918	1	—	—	—
575	—	—	—	—	—	—	—	—	0.915	1	1.089

2. The following equation converts kW of heat energy to Btuh: kW x 3,412 = Btuh.
3. Heater contactor coils are 24 v and require 8 va holding current.
4. Electric heaters are tested and ETL approved at maximum total external static pressure of 1.9 in. wg.
5. MCA and MOCP values apply to both standard and alternate factory-supplied motors.
6. Approximate shipping weight for CAELHEAT001A00-015A00 is 55 lb (25 kg) each. Approximate shipping weight for CAELHEAT016A00-027A00 is 60 lb (27 kg) each, and CAELHEAT028A00-039A00 is 75 lb (34 kg) each.

TYPICAL PIPING AND WIRING

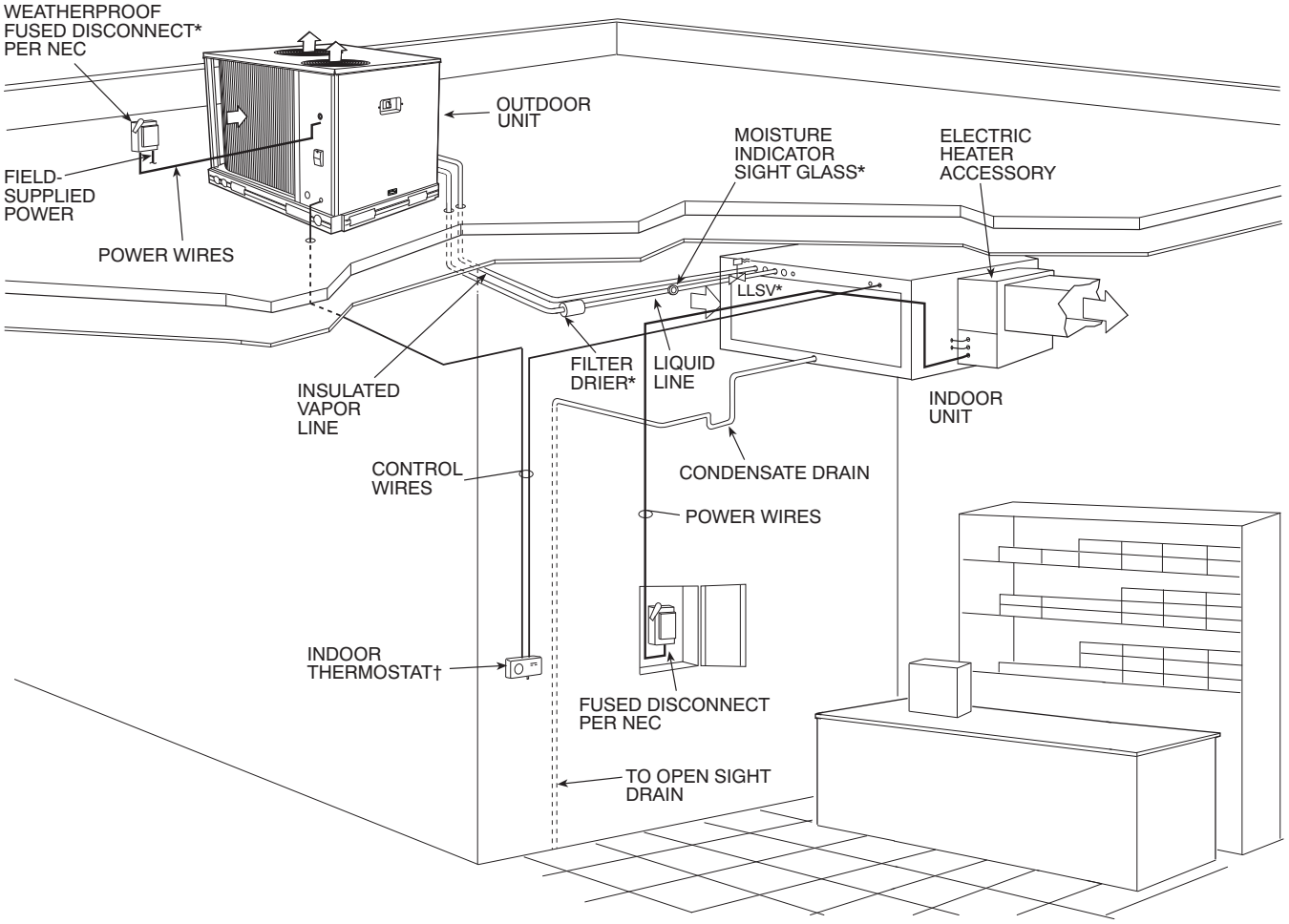

LEGEND:

NEC – National Electrical Code

TXV – Thermostatic Expansion Valve

* Field–supplied

† Double riser may be required. Consult condensing unit product data catalog for details.

NOTES:

1. All piping must follow standard refrigerant piping techniques. Refer to Carrier System Design Manual for details.
2. All wiring must comply with the applicable local and national codes.
3. Wiring and piping shown are general points-of-connection guides only and are not intended for, or to include all details for, a specific installation.
4. Liquid line solenoid valve (solenoid drop control) is recommended to prevent refrigerant migration to the compressor.
5. Internal factory-supplied TXVs not shown.

VERTICAL INSTALLATION - 40RU (TYPICAL)

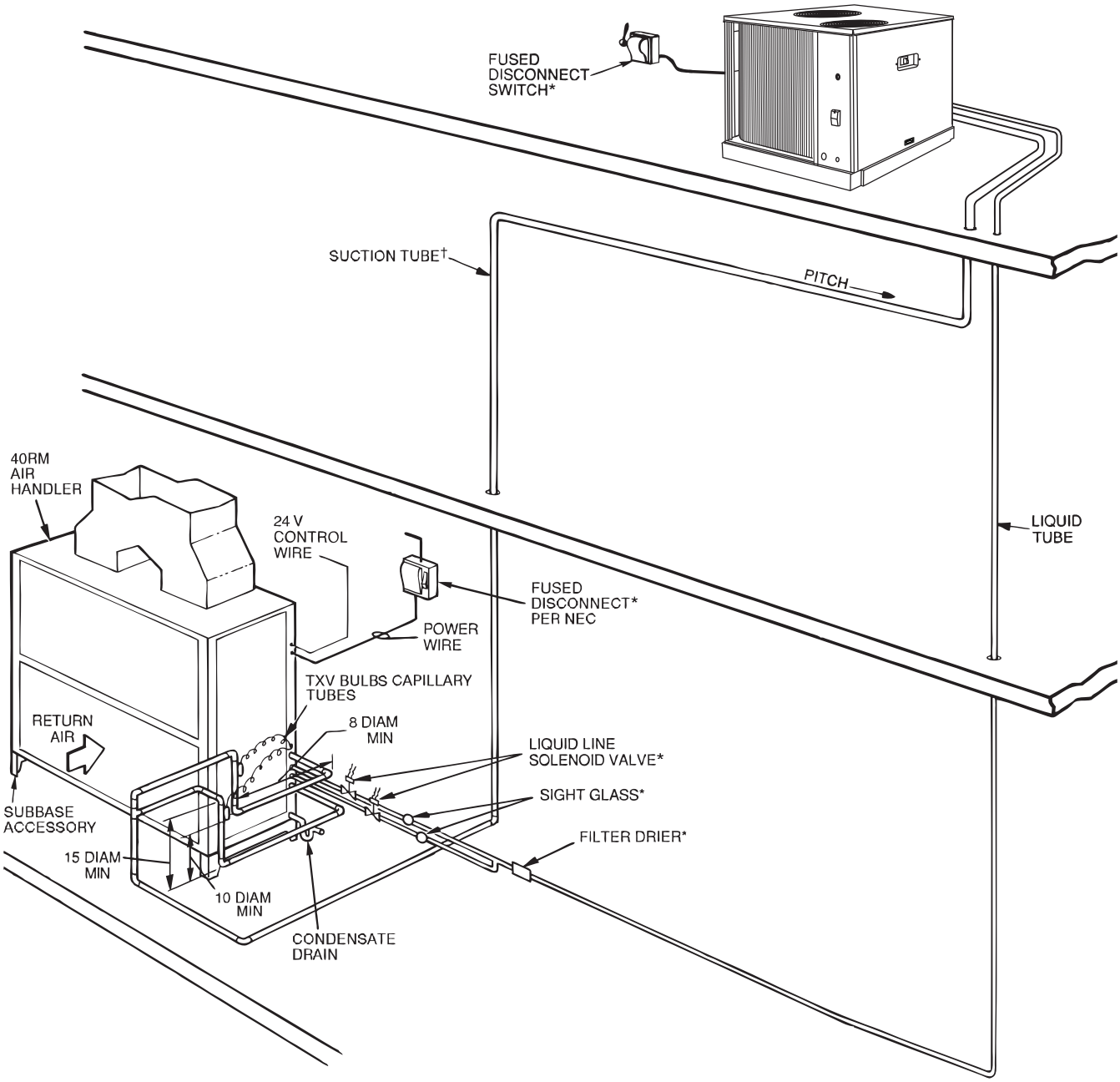

LEGEND:

LLSV – Liquid Line Solenoid Valve
NEC – National Electrical Code
TXV – Thermostatic Expansion Valve
* Field–supplied
† Double riser may be required Consult condensing unit product data catalog ro details.

NOTES:

1. All piping must follow standard refrigerant piping techniques. Refer to Carrier System Design Manual for details.
2. All wiring must comply with the applicable local and national codes.
3. Wiring and piping shown are general points-of-connection guides only and are not intended for, or to include all details for, a specific installation.
4. Liquid line solenoid valve (solenoid drop control) is recommended to prevent refrigerant migration to the compressor.
5. Internal factory-supplied TXVs not shown.

WIRE ROUTING, BASE UNIT 40RU

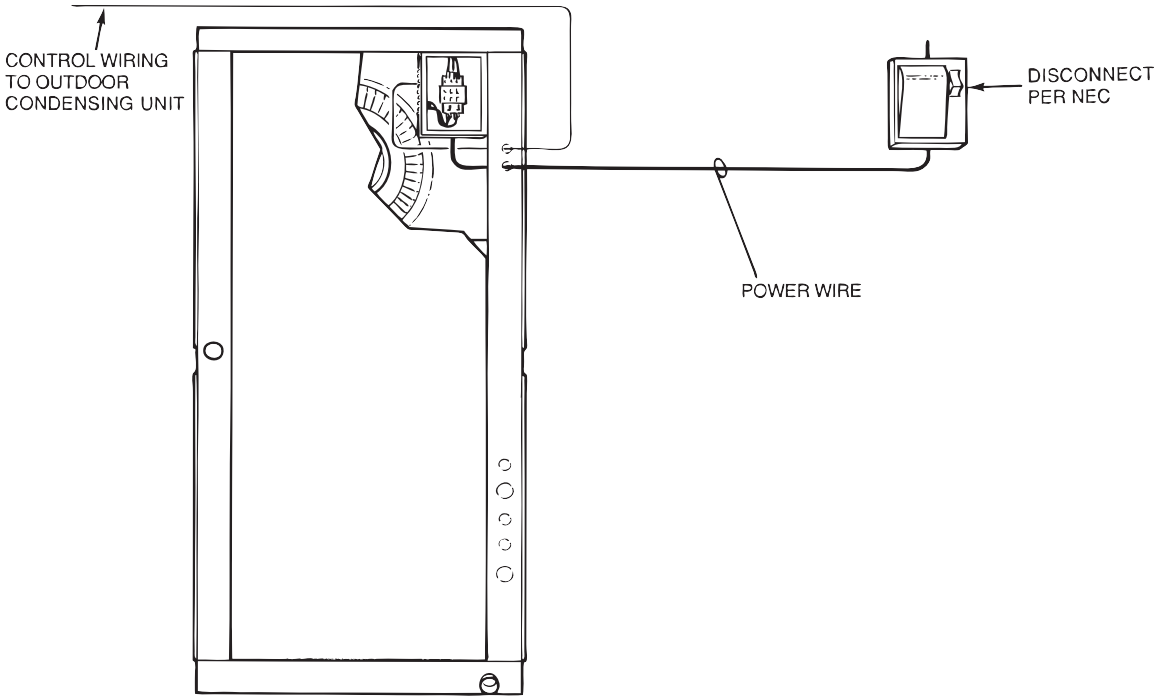

C09048

WIRE ROUTING, UNIT WITH ELECTRIC HEAT - 40RU

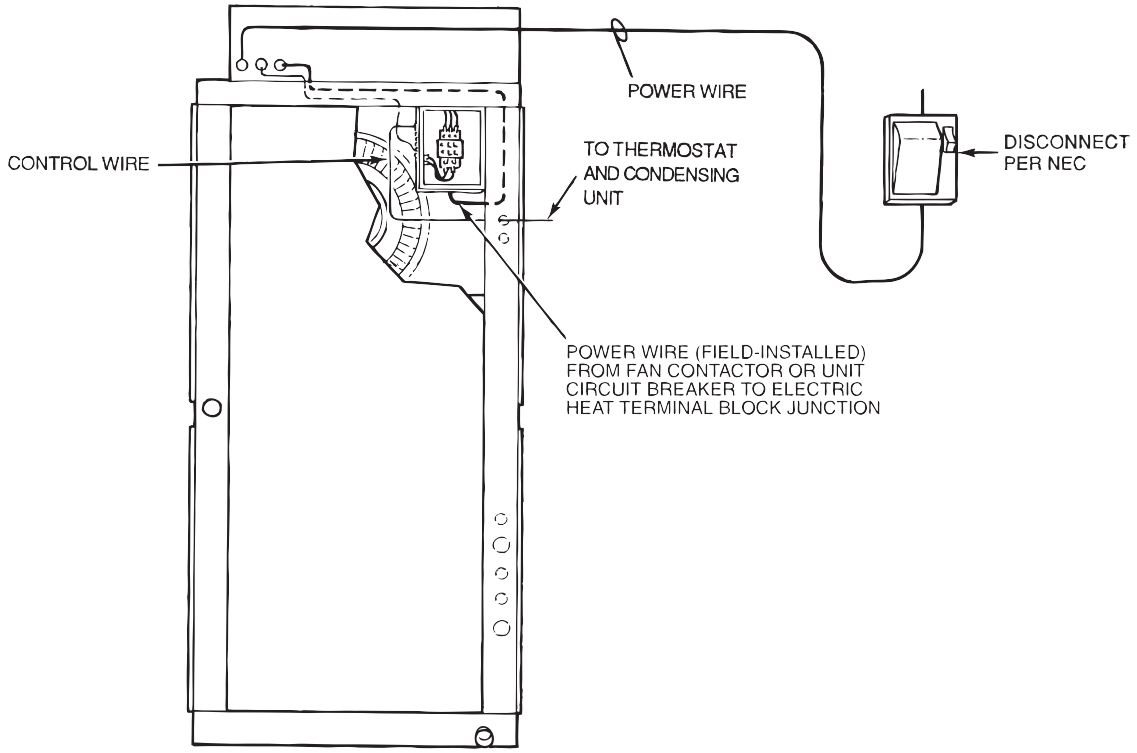

C09049

TYPICAL CONTROL WIRING SCHEMATIC

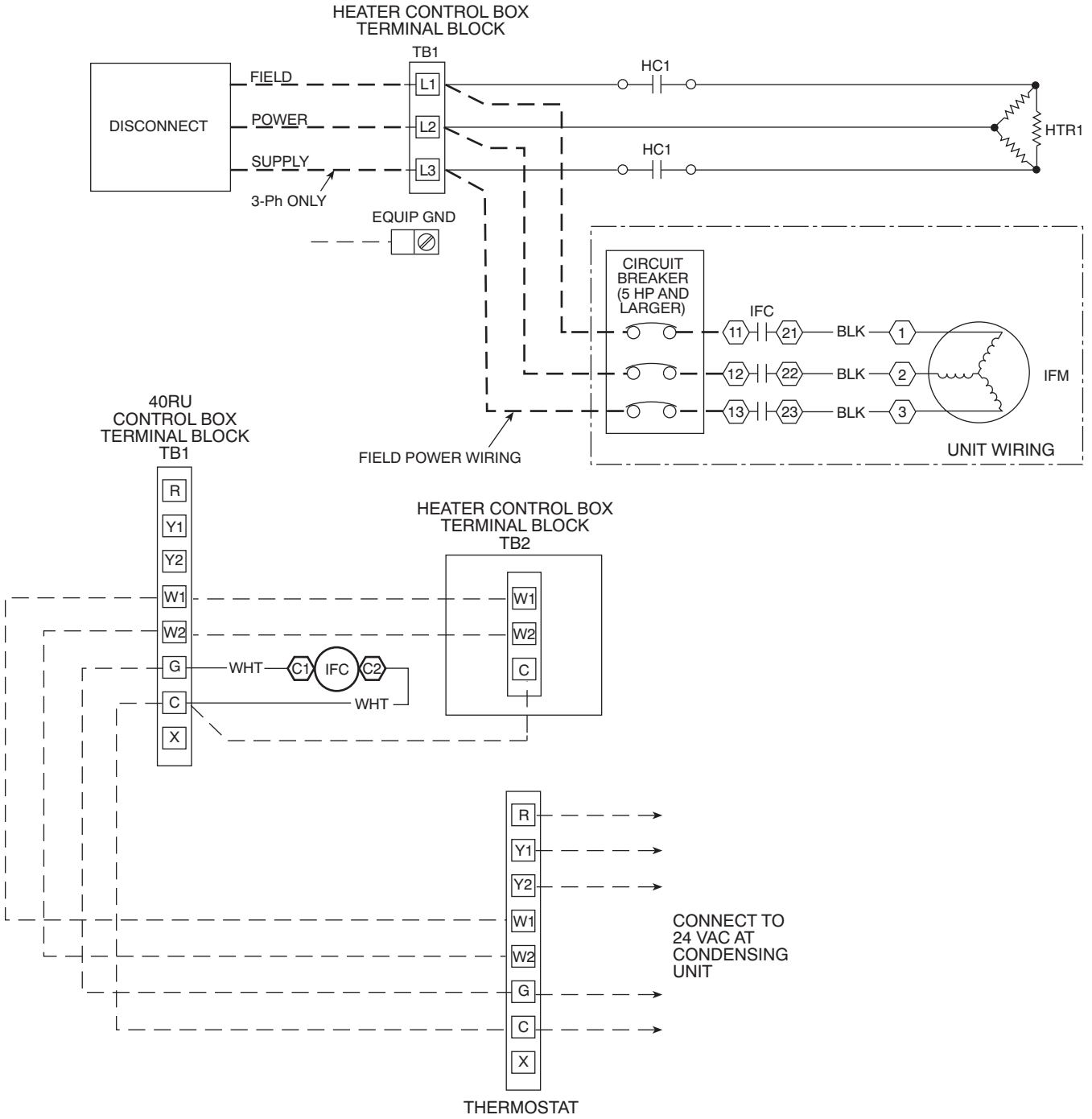

40RU

APPLICATION DATA

Operating limits

Maximum fan speed

40RU07-14 . . . . . 1200 RPM(20 R/S)

General

IMPORTANT: Do not bury refrigerant piping underground.

Select equipment to match or to be slightly less than peak load. This provides better humidity control, less unit cycling, and less part-load operation. Equipment should be selected to perform at no less than 300 cfm/ton (40 L/s per kW).

The air handler fan must always be operating when the condensing unit is operating.

Ductwork should be sized according to unit size, not building load. For larger units with two fans, a split duct transition is recommended at the fan outlets, but a plenum can be used with slight reduction in external static pressure capability.

For variable air volume (VAV) systems with supply-to-return air recycling, use the equipment room as a return air plenum.

Hot gas bypass

Hot gas bypass may be required for low load control in certain applications. Hot gas should only be used during first stage cooling operation and should be applied to all evaporator circuits that are active at that time. To apply hot gas bypass, the 40RU unit will require a field-installed auxiliary side connector(s). See the Auxiliary Side Connector Data table for part numbers.

AUXILIARY SIDE CONNECTOR DATA

UNIT 40RUA/S	CARRIER P/N	INLET/OUTLET DIAMETER — ODF (in.)	AUXILIARY (Hot Gas) DIAMETER — ODF (in.)
07	EA19BA705	$1^{1}/_{8}$	$^{5}/_{8}$
08	EA19BA905	$1^{3}/_{8}$	$^{7}/_{8}$
12	EA19BA705	$1^{1}/_{8}$	$^{5}/_{8}$
14	EA19BA705	$1^{1}/_{8}$	$^{5}/_{8}$
16	EA19BA705	$1^{1}/_{8}$	$^{5}/_{8}$
25	EA19BA705	$1^{1}/_{8}$	$^{5}/_{8}$
28	EA19BA905	$1^{3}/_{8}$	$^{7}/_{8}$
30	EA19BA905	$1^{3}/_{8}$	$^{7}/_{8}$

FACTORY-INSTALLED NOZZLE AND DISTRIBUTOR DATA

UNIT	COIL TYPE	TXV Qty...Part No.*	DISTRIBUTOR Qty...Part No.†	FEEDER TUBES PER DISTRIBUTOR Qty...Size (in.)	NOZZLE Qty...Part No.
40RUA07	4 Row	1...TDEBX8	1...1116	12...$^{1}/_{4}$	1...E5
40RUA08	4 Row	1...TDEBX8	1...1126	15...$^{1}/_{4}$	1...C6
40RUA012	4 Row	2...TDEX6	2...1115	9...$^{1}/_{4}$	2...E4
40RUA14	4 Row	2...TDEBX8	2...1115	12...$^{3}/_{16}$	2...E5
40RUA16	4 Row	2...TDEBX8	2...1126	16...$^{1}/_{4}$	2...C6
40RUA25	4 Row	2...TDEBX11	2...1126	18...$^{3}/_{16}$	2...C8
40RUA28	4 Row	2...TDEBX11	2...1126	20...$^{3}/_{16}$	2...C15
40RUA30	4 Row	2...TDEBX16	2...1126	24...$^{3}/_{16}$	2...C17

LEGEND
TXV – Thermostatic Expansion Valve
* Danfoss part numbers shown.
† Sporlan Valve Co. part numbers shown.
NOTE: Hot gas bypass applications require field-supplied auxiliary side connector.

APPLICATION DATA (cont.)

FAN MOTOR DATA
STANDARD MOTOR — English

UNIT	40RUA 07	40RUA/S 08	40RUS 10	40RUA/S 12	40RUA/S 14	40RUA/S 16	40RUA/S 25	40RUA/S 28	40RUA/S 30
208/230-1-60									
Speed (rpm)	1725	1725	1725	—	—	—	—	—	—
Hp	1.3	2.4	2.4	—	—	—	—	—	—
Frame (NEMA)	56Y	56Y	56Y	—	—	—	—	—	—
Shaft Dia (in.)	5/8	5/8	5/8	—	—	—	—	—	—
208/230-3-60 and 460-3-60									
Speed (rpm)	1725	1725	1725	1725	1725	1725	1745	1745	1745
Hp	2.4	2.4	2.4	2.4	2.9	3.7	5.0	7.5	10.0
Frame (NEMA)	56Y	56Y	56Y	56Y	56Y	56Y	S184T	S213T	S215T
Shaft Dia (in.)	5/8	5/8	5/8	5/8	7/8	7/8	1 1/8	1 3/8	1 3/8
575-3-60									
Speed (rpm)	1725	1725	1725	1725	1725	1725	1745	1755	1755
Hp	1.0	2.0	2.0	2.0	3.0	3.0	5.0	7.5	10.0
Frame (NEMA)	56	56HZ	56HZ	56HZ	56HZ	56HZ	184T	S213T	D215T
Shaft Dia (in.)	5/8	7/8	7/8	7/8	7/8	7/8	1 1/8	1 3/8	1 3/8

LEGEND:
NEMA — National Electrical Manufacturers Association (U.S.A.)

ALTERNATE MOTOR — English

UNIT	40RUA 07	40RUA/S 08	40RUS 10	40RUA/S 12	40RUA/S 14	40RUA/S 16	40RUA/S 25	40RUA/S 28
208/230-1-60								
Speed (rpm)	1725	1725	1725	—	—	—	—	—
Hp	2.4	2.4	2.4	—	—	—	—	—
Frame (NEMA)	56Y	56Y	56Y	—	—	—	—	—
Shaft Dia (in.)	5/8	5/8	5/8	—	—	—	—	—
230-3-60 and 460-3-60								
Speed (rpm)	1725	1725	1725	1725	1725	1725	1745	1745
Hp	2.9	2.9	2.9	3.7	3.7	5.0	7.5	10.0
Frame (NEMA)	56Y	56Y	56Y	Y56Y	Y56Y	S184T	S213T	S215T
Shaft Dia (in.)	7/8	7/8	7/8	7/8	7/8	1 1/8	1 3/8	1 3/8
575-3-60								
Speed (rpm)	1725	1725	1725	1725	1745	1745	1755	1750
Hp	2.0	3.0	3.0	3.0	5.0	5.0	7.5	10.0
Frame (NEMA)	56HZ	56HZ	56HZ	56HZ	184T	184T	S213T	D215T
Shaft Dia (in.)	7/8	7/8	7/8	7/8	1 1/8	1 1/8	1 3/8	1 3/8

LEGEND:
NEMA — National Electrical Manufacturers Association (U.S.A.)

MOTOR EFFICIENCY 40RUA/S

MOTOR HP	EPACT MINIMUM	MOTOR EFFICIENCY
1.3*	—	70%
2.4	—	82%
2.9	—	82%
3.7	—	84%
5.0	87.5%	87.5%
7.5	88.5%	88.5%
10.0	89.5%	89.5%

LEGEND:
EPACT – Energy Policy and Conservation Act of 1992
* Single-phase only.

FAN MOTOR DATA (cont.)
STANDARD MOTOR — SI

UNIT	40RUA 07	40RUA/S 08	40RUS 10	40RUA/S 12	40RUA/S 14	40RUA/S 16	40RUA/S 25	40RUA/S 28	40RUA/S 30
208/230-1-60									
Speed (r/s)	28.75	28.75	28.75	—	—	—	—	—	—
Shaft kW	0.97	1.79	1.79	—	—	—	—	—	—
Frame (NEMA)	56Y	56Y	56Y	—	—	—	—	—	—
Shaft Dia (mm)	15.9	15.9	15.9	—	—	—	—	—	—
208/230-3-60 and 460-3-60									
Speed (r/s)	28.75	28.75	28.75	28.75	28.75	28.75	29.08	29.08	29.08
Shaft kW	1.79	1.79	1.79	1.79	2.16	2.76	3.73	5.60	7.46
Frame (NEMA)	56Y	56Y	56Y	56Y	56Y	56Y	S184T	S213T	S215T
Shaft Dia (mm)	15.9	15.9	15.9	15.9	22.2	22.2	28.6	34.9	34.9
575-3-60									
Speed(r/s)	28.75	28.75	28.75	28.75	28.75	28.75	29.08	29.25	29.25
Shaft kW	0.75	1.49	1.49	1.49	2.24	2.24	3.73	5.60	7.46
Frame (NEMA)	56	56HZ	56HZ	56HZ	56HZ	56HZ	184T	S213T	S215T
Shaft Dia (mm)	15.9	22.2	22.2	22.2	22.2	22.2	28.6	34.9	34.9

LEGEND:
NEMA — National Electrical Manufacturers Association (U.S.A.)

ALTERNATE MOTOR — SI

UNIT	40RUA 07	40RUA/S 08	40RUS 10	40RUA/S 12	40RUA/S 14	40RUA/S 16	40RUA/S 25	40RUA/S 28
208/230-1-60								
Speed (r/s)	28.75	28.75	28.75	—	—	—	—	—
Shaft kW	1.79	1.79	1.79	—	—	—	—	—
Frame (NEMA)	56Y	56Y	56Y	—	—	—	—	—
Shaft Dia (mm)	15.9	15.9	15.9	—	—	—	—	—
208/230-3-60 and 460-3-60								
Speed(r/s)	28.75	28.75	28.75	28.75	28.75	29.08	29.08	29.17
Shaft kW	2.16	2.16	2.16	2.76	2.76	3.73	5.60	7.46
Frame (NEMA)	56Y	56Y	56Y	Y56Y	Y56Y	S184T	S213T	S215T
Shaft Dia (mm)	22.2	22.2	22.2	22.2	22.2	28.6	34.9	34.9
575-3-60								
Speed (r/s)	28.75	28.75	28.75	28.75	29.08	29.08	29.25	29.17
Shaft kW	1.50	2.24	2.24	2.24	3.73	3.73	5.60	7.46
Frame (NEMA)	56HZ	56HZ	56HZ	56HZ	184T	184T	S213T	D215T
Shaft Dia (mm)	22.2	22.2	22.2	22.2	28.6	28.6	34.9	34.9

LEGEND:
NEMA — National Electrical Manufacturers Association (U.S.A.)

APPLICATION DATA (cont.)

STANDARD DRIVE DATA, 60 Hz — English

UNIT	40RUA 07	40RUA/S 08	40RUS 10	40RUA/S 12	40RUA/S 14	40RUA/S 16	40RUA/S 25	40RUA/S 28	40RUA/S 30
MOTOR DRIVE									
Motor Pulley Pitch Diameter (in.)	2.4-3.4	2.8-3.8	2.8-3.8	3.4-4.4	2.8-3.8	2.8-3.8	3.7-4.7	4.3-5.3	4.3-5.3
Pulley Factory Setting Full Turns Open	2.5	2.5	2.5	2.5	2.5	2.5	3.0	3.0	3.0
FAN DRIVE									
Pulley Pitch Dia (in.)	8.8	8.8	8.8	8.8	9.0	9.0	9.4	11.0	11.0
Pulley Bore (in.)	1	1	1	1	$1^{7}/_{16}$	$1^{7}/_{16}$	$1^{7}/_{16}$	$1^{15}/_{16}$	$1^{15}/_{16}$
Belt No. — Section	1—A	1—A	1—A	1—A	1—A	1—A	1—B	2—B*	2—B*
Belt Pitch (in.)	40.3	41.3	41.3	42.3	42.3	42.3	41.8	(2) 42.8 (2) 43.8	(2) 42.8 (2) 43.8
FAN SPEEDS (rpm)									
Factory Settings	568	647	647	764	632	632	771	752	752
Range	470-666	549-745	549-745	666-863	537-728	537-728	679-863	682-841	674-831
Max Allowable Speed (rpm)	1200	1200	1200	1200	1200	1200	1200	1100	1100
Change per 1/2 turn of Moveable Motor Pulley Flange	19.6	19.6	19.6	19.7	19.1	19.1	15.3	13.1	13.1
MAX FULL TURNS FROM CLOSED POSITION	5	5	5	5	5	5	6	6	6
SHAFTS CENTER DISTANCE (in.)	10.44-12.32	10.44-12.32	10.44-12.32	10.44-12.32	10.44-12.32	10.44-12.32	9.12-10.99	6.67-9.43	6.67-9.43

* Four belts shipped with unit. Use correct set of 2 belts sized according to the pulley setting.

MEDIUM-STATIC DRIVE DATA, 60 Hz — English

UNIT	40RUA 07	40RUA/S 08	40RUS 10	40RUA/S 12	40RUA/S 14	40RUA/S 16	40RUA/S 25	40RUA/S 28	40RUA/S 30
MOTOR DRIVE									
Motor Pulley Pitch Diameter (in.)	3.4-4.4	3.4-4.4	3.4-4.4	3.4-4.4	3.4-4.4	3.7-4.7	4.3-5.3	4.3-5.3	4.3-5.3
Pulley Factory Setting Full Turns Open	2.5	2.5	2.5	2.5	2.5	3.0	3.0	3.0	3.0
FAN DRIVE									
Pulley Pitch Dia (in.)	8.8	8.0	8.0	8.0	8.2	8.6	9.4	9.4	9.4
Pulley Bore (in.)	1	1	1	1	$1^{7}/_{16}$	$1^{7}/_{16}$	$1^{7}/_{16}$	$1^{15}/_{16}$	$1^{15}/_{16}$
Belt No. — Section	1—A	1—A	1—A	1—A	1—A	1—B	1—B	2—B*	2—B*
Belt Pitch (in.)	42.3	40.3	40.3	40.3	41.3	41.8	41.8	(2) 38.8 (2) 39.8	(2) 38.8 (2) 39.8
FAN SPEEDS (rpm)									
Factory Setting	764	841	841	841	820	842	881	881	881
Range	666-863	733-949	733-949	733-949	715-926	742-943	798-984	798-984	798-984
Max Allowable Speed (rpm)	1200	1200	1200	1200	1200	1200	1200	1100	1100
Change per $^{1}/_{2}$ Turn of Moveable Motor Pulley Flang$_{e}$	19.7	21.6	21.6	21.6	21.1	16.7	15.3	15.3	15.3
MAX FULL TURNS FROM CLOSED POSITION	5	5	5	5	5	6	6	6	6
SHAFTS CENTER DISTANCE (in.)	10.44-12.32	10.44-12.32	10.44-12.32	10.44-12.32	10.44-12.32	10.44-12.32	9.16-10.99	6.67-9.43	6.67-9.43

* Four belts shipped with unit. Use correct set of 2 belts sized according to the pulley setting.

HIGH-STATIC DRIVE DATA, 60 Hz — English

UNIT	40RUA 07	40RUA/S 08	40RUS 10	40RUA/S 12	40RUA/S 14	40RUA/S 16	40RUA 40RUS 25	40RUA/S 28	40RUA/S 30
MOTOR DRIVE									
Motor Pulley Pitch Diameter (in.)	3.4-4.4	3.4-4.4	3.4-4.4	3.4-4.4	3.7-4.7	4.3-5.3	4.3-5.3	4.3-5.3	4.3-5.3
Pulley Factory Setting Full Turns Open	2.5	2.5	2.5	2.5	3.0	3.0	3.0	3.0	3.0
FAN DRIVE									
Pulley Pitch Dia (in.)	7.0	6.0*	6.0	6.0	7.4	7.9	7.4	8.6	8.6
Pulley Bore (in.)	1	1	1	1	$1^{7}/_{16}$	$1^{7}/_{16}$	$1^{7}/_{16}$	$1^{15}/_{16}$	$1^{15}/_{16}$
Belt No. — Section	1—A	1—A	1—A	1—A	1—B	1—B	2—B	2—B	2—B
Belt Pitch (in.)	41.3	37.3	37.3	37.3	39.8	39.8	36.8	37.8	37.8
FAN SPEEDS (rpm)									
Factory Setting	961	1121	1121	1121	979	1060	1118	1024	1024
Range	838-1084	978-1200*†	978-1200†	978-1200†	873-1096	950-1171	1014-1200†	873-1075	873-1075
Max Allowable Speed (rpm)	1200	1200	1200	1200	1200	1200	1200	1100	1100
Change per 1/2 Turn of Moveable Motor Pulley Flange	24.6	28.7	28.7	28.7	19.4	18.4	19.4	16.7	16.7
MAX FULL TURNS FROM CLOSED POSITION	5	5	5	5	6	6	6	6	6
SHAFTS CENTER DISTANCE (in.)	10.44-12.32	10.44-12.32	10.44-12.32	10.44-12.32	10.44-12.32**	9.16-10.99	8.16-10.02	6.67-9.43	6.67-9.43

* Values for 3-phase motor shown. For single-phase motor, pulley pitch diameter is 7 in. and resulting fan speed is 837-1096 rpm.
† It is possible to adjust drive so that fan speed exceeds maximum allowable. DO NOT exceed 1200 rpm.
** 575-v unit has a center distance of 9.16-10.99.

STANDARD DRIVE DATA, 60 Hz — SI

UNIT	40RUA 07	40RUA/S 08	40RUS 10	40RUA/S 12	40RUA/S 14	40RUA/S 16	40RUA/S 25	40RUA/S 28	40RUA/S 30
MOTOR DRIVE									
Motor Pulley Pitch Diameter (mm)	61.0-86.4	71.1-96.5	71.1-96.5	86.4-111.8	71.1-96.5	71.1-96.5	94.0-119.4	109.2-134.6	109.2-134.6
Pulley Factory Setting Full Turns Open	2.5	2.5	2.5	2.5	2.5	2.5	3.0	3.0	3.0
FAN DRIVE									
Pulley Pitch Dia (mm)	224	224	224	224	229	229	239	279	279
Pulley Bore (mm)	25.4	25.4	25.4	25.4	36.5	36.5	36.5	49.2	49.2
Belt No. — Section	1—A	1—A	1—A	1—A	1—A	1—A	1—B	2—B*	2—B*
Belt Pitch (mm)	1024	1049	1049	1074	1074	1074	1062	(2) 1087 (2) 1113	(2) 1087 (2) 1113
FAN SPEEDS (r/s)									
Factory Setting	9.5	10.8	10.8	12.7	10.5	10.5	12.9	12.5	12.5
Range	7.8-11.1	9.2-12.4	9.2-12.4	11.1-14.4	9.0-12.1	9.0-12.1	11.3-14.4	11.4-14.0	11.2-13.9
Max Allowable Speed (r/s)	20.0	20.0	20.0	20.0	20.0	20.0	20.0	18.3	18.3
Change per $^{1}/_{2}$ Turn of Moveable Motor Pulley Flange	0.327	0.327	0.327	0.328	0.318	0.318	0.255	0.218	0.218
MAX FULL TURNS FROM CLOSED POSITION	5	5	5	5	5	5	6	6	6
SHAFTS CENTER DISTANCE (mm)	265-313	265-313	265-313	265-313	265-313	265-313	232-279	169-240	169-240

* Four belts shipped with unit. Use correct set of 2 belts sized according to the pulley setting.

APPLICATION DATA (cont.)

MEDIUM-STATIC DRIVE DATA, 60 Hz — SI

UNIT	40RUA 07	40RUA/S 08	40RUS 10	40RUA/S 12	40RUA/S 14	40RUA/S 16	40RUA/S 25	40RUA/S 28	40RUA/S 30
MOTOR DRIVE									
Motor Pulley Pitch Diameter (mm)	86.4-111.8	86.4-111.8	86.4-111.8	86.4-111.8	86.4-111.8	94.0-119.4	109.2-134.6	109.2-134.6	109.2-134.6
Pulley Factory Setting Full Turns Open	2.5	2.5	2.5	2.5	2.5	3.0	3.0	3.0	3.0
FAN DRIVE									
Pulley Pitch Dia (mm)	224	203	203	203	208	218	239	239	239
Pulley Bore (mm)	25.4	25.4	25.4	25.4	36.5	36.5	36.5	49.2	49.2
Belt No. — Section	1—A	1—A	1—A	1—A	1—A	1—B	1—B	2—B*	2—B*
Belt Pitch (mm)	1074	1024	1024	1024	1049	1062	1062	(2) 986 (2) 1011	(2) 986 (2) 1011
FAN SPEEDS (r/s)									
Factory Setting	12.7	14.0	14.0	14.0	13.7	14.0	14.7	14.7	14.7
Range	11.1-14.4	12.2-15.8	12.2-15.8	12.2-15.8	11.9-15.4	12.4-15.7	13.3-16.4	13.3-16.4	13.3-16.4
Max Allowable Speed (r/s)	20.0	20.0	20.0	20.0	20.0	20.0	20.0	18.3	18.3
Change per $^1/_2$ Turn of Moveable Motor Pulley Flange	0.328	0.360	0.360	0.360	0.352	0.278	0.255	0.255	0.255
MAX FULL TURNS FROM CLOSED POSITION	5	5	5	5	6	6	6	6	6
SHAFTS CENTER DISTANCE (mm)	265-313	265-313	265-313	265-313	265-313	265-313	232-279	169-240	169-240

* Four belts shipped with unit. Use correct set of 2 belts sized according to the pulley setting.

HIGH-STATIC DRIVE DATA, 60 Hz — SI

UNIT	40RUA 07	40RUA/S 08	40RUS 10	40RUA/S 12	40RUA/S 14	40RUA/S 16	40RUA/S 25	40RUA/S 28	40RUA/S 30
MOTOR DRIVE									
Motor Pulley Pitch Diameter (mm)	86.4-111.8	86.4-111.8	86.4-111.8	86.4-111.8	94.0-119.4	109.2-134.6	109.2-134.6	109.2-134.6	109.2-134.6
Pulley Factory Setting Full Turns Open	2.5	2.5	2.5	2.5	3.0	3.0	3.0	3.0	3.0
FAN DRIVE									
Pulley Pitch Dia (mm)	178	152*	152	152	188	201	188	203	203
Pulley Bore (mm)	25.4	25.4	25.4	25.4	36.5	36.5	36.5	49.2	49.2
Belt No. — Section	1—A	1—A	1—A	1—A	1—B	1—B	2—B	2—B	2—B
Belt Pitch (mm)	1049	947	947	947	1011	1011	935	935	960
FAN SPEEDS (r/s)									
Factory Setting	16.0	18.7	18.7	18.7	16.3	17.7	18.6	17.1	17.1
Range	14.0-18.1	16.3-20.0*†	16.3-20.0†	16.3-20.0†	14.4-18.3	15.8-19.5	16.9-20.0†	14.6-17.9	14.6-17.9
Max Allowable Speed (r/s)	20.0	20.0	20.0	20.0	20.0	20.0	20.0	18.3	18.3
Change per $^1/_2$ Turn of Moveable Motor Pulley Flange	0.410	0.478	0.478	0.478	0.323	0.307	0.323	0.278	0.278
MAX FULL TURNS FROM CLOSED POSITION	5	5	5	5	6	6	6	6	6
SHAFTS CENTER DISTANCE (mm)	265-313	265-313	265-313	265-313	265-313**	232-279	207-255	169-240	169-240

* Values for 3-phase motor shown. For single-phase motor, pulley pitch diameter is 178 mm and resulting fan speed is 14.0-18.3 r/s.
† It is possible to adjust drive so that fan speed exceeds maximum allowable. DO NOT exceed 20 r/s.
** 575-v unit has a center distance of 233-279.

GUIDE SPECIFICATIONS

Commercial Packaged Air-Handling Unit

HVAC Guide Specifications

Size Range: **2,400 to 6,000 Cfm (1150 to 5650 L/s), Nominal Airflow, 6 to 30 Tons (21 to 105 kW), Nominal Cooling**

Carrier Model Numbers: **40RUA (Direct-Expansion Coil)**
40RUS (Chilled Water Coil)

Part 1 — GENERAL

1.01 SYSTEM DESCRIPTION

A. Indoor, packaged air-handling unit for use in commercial split systems. Unit shall have a multi-position design and shall be capable of horizontal or vertical installation on a floor or in a ceiling, with or without ductwork. (Only vertical units are to be applied without ductwork.)

B. Unit with direct-expansion coil shall be used in a refrigerant circuit with a matching air-cooled condensing unit. Unit with chilled water coil shall be used in a chilled water circuit.

1.02 QUALITY ASSURANCE

A. Coils shall be designed and tested in accordance with ASHRAE 15 Safety Code for Mechanical Refrigeration (U.S.A.), latest edition.

B. Unit shall be constructed in accordance with ETL (U.S.A.) and ETL, Canada, standards and shall carry the ETL and ETL, Canada, labels.

C. Unit insulation and adhesive shall comply with NFPA-90A (U.S.A.) requirements for flame spread and smoke generation. Insulation shall contain an EPA-registered immobilized antimicrobial agent to effectively resist the growth of bacteria and fungi as proven by tests in accordance with ASTM standards G21 and 22 (U.S.A.).

D. Unit shall be manufactured in a facility registered to the ISO 9001:2000 manufacturing quality standard.

E. Direct-expansion and chilled water coils shall be burst and leak tested at 435 psi (2999 kPa).

1.03 DELIVERY AND STORAGE

Units shall be stored and handled per manufacturer's recommendations.

Part 2 — PRODUCTS

2.01 EQUIPMENT

Indoor mounted, draw-thru, packaged air-handling unit that can be used in a suspended horizontal configuration or a vertical configuration. Unit shall consist of forward-curved belt-driven centrifugal fan(s), motor and drive assembly, pre-wired fan motor contactor, factory-installed refrigerant metering devices (direct-expansion coil units), cooling coil, 2-in. (51-mm) disposable air filters, and condensate drain pans for vertical or horizontal configurations.

A. Base Unit:

1. Cabinet shall be constructed of mill-galvanized steel.
2. Cabinet panels shall be fully insulated with $^1/_2$-in. (12.7-mm) fire-retardant material. Insulation shall contain an EPA-registered immobilized antimicrobial agent to effectively resist the growth of bacteria and fungi as proven by tests in accordance with ASTM standards G21 and 22 (U.S.A.).
3. Unit shall contain non-corroding condensate drain pans for both vertical and horizontal applications. Drain pans shall have connections on right and left sides of unit to facilitate field connection. Drain pans shall have the ability to be sloped toward the right or left side of the unit to prevent standing water from accumulating in pans.
4. Unit shall have factory-supplied 2-in. (51 mm) throwaway-type filters installed upstream from the cooling coil. Filter access shall be from either the right or left side of the unit.

B. Coils:

DX coil is 4-row and consists of copper tubes with sine-wave aluminum fins bonded to the tubes by mechanical expansion. Suction and liquid line connections or supply and discharge connections shall be made on the same side of the coil.

1. Direct-expansion coils shall feature factory installed thermostatic expansion valves (TXVs) for refrigerant control. The TXVs shall be Puron® R-410A compatible and capable of external adjustment. Direct-expansion heat pump coils shall have a factory-installed bypass line and check valve assembly around the TXVs to allow liquid flow from the coil to the outdoor unit during the heating mode. Coil tubing shall be internally rifled to maximize heat transfer.

2. Chilled water coils shall be rated for an operating pressure of not less than 300 psig (2069 kPag).

C. Operating Characteristics:

Unit shall be capable of providing _____ cfm (L/s) airflow at an external static pressure of _____ in. wg (kPag).

D. Motor:

1. Fan motor of the size and electrical characteristics specified on the equipment schedule shall be factory supplied and installed.

2. Motors rated at 1.3 through 3.7 hp (0.97 through 2.76 kW) shall have internal thermal overload protection. Motors rated at 5 hp (3.73 kW) shall be protected by a circuit breaker.

3. Evaporator-fan motor shall have permanently lubricated, sealed bearings and inherent automatic-reset thermal overload protection or manual reset calibrated circuit breakers. Evaporator motors are designed specifically for Carrier and do not have conventional horsepower (hp) ratings listed on the motor nameplate. Motors are designed and qualified in the "air-over" location downstream of the cooling coil and carry a maximum continuous bhp rating that is the maximum application bhp rating for the motor; no "safety factors" above that rating may be applied.

4. All evaporator-fan motors 5 hp and larger shall meet the minimum efficiency requirements as established by the Energy Policy Act of 1992 (EPACT), effective October 24, 1997.

E. Special Features:

1. Alternate Motor and Drive:

An alternate motor and/or medium-static or high-static drive shall be available to meet the airflow and external static pressure requirements specified on the equipment schedule.

2. External Paint:

Where conditions require, units shall be painted with an American Sterling Gray finish.

3. Hot Water Coil:

Coil shall be 2-row, U-bend coil with copper tubes and aluminum plate fins bonded to the tubes by mechanical expansion. Coil shall be mounted in a galvanized steel housing that shall be fastened to the unit's fan deck for blow-thru heating operation. Coil shall have maximum working pressure of 150 psig (1034 kPag).

4. Steam Distributing Coil:

Coil shall consist of one row of copper tubes with aluminum plate fins, and shall have inner steam distributing tubes. Coil shall be mounted in a galvanized steel housing and shall be fastened to the unit's fan deck for blow-thru heating operation. Coil shall have maximum working pressure of 20 psig at 260°F (138 kPag at 126°C).

5. Electric Heaters:

Heaters for nominal 240, 480, or 575-volt, 3-phase, 60 Hz shall be factory-supplied for field installation as shown on the equipment drawings. Electric heat assembly shall be ETL (U.S.A.) and ETL, Canada, agency approved, and shall have single-point power wiring. Heater assembly shall include contactors with 24-v coils, power wiring, 24-v control wiring terminal blocks, and a hinged access panel. Electric heaters shall not be used with air discharge plenum.

6. Air Discharge Plenum:

Plenum shall be factory-supplied to provide free-blow air distribution for vertical floor-mounted units. A grille with moveable vanes for horizontal or vertical airflow adjustment shall be included. Plenum shall be field-assembled and field-installed on the unit's fan deck for blow-thru air distribution. Plenum shall not be used with electric heaters.

7. Return-Air Grille:

Grille shall be factory-supplied for field installation on the unit's return air opening.

8. Unit Subbase:

   Subbase assembly shall be factory-supplied for field installation. Subbase shall elevate floor-mounted vertical units to provide access for correct condensate drain connection.

9. Economizer:

   Economizer for ventilation or "free" cooling shall be factory provided for field installation on either return air opening of air handler. For free cooling applications, economizer shall be compatible with separate thermostat; economizer dampers shall open when outdoor air enthalpy is suitable for free cooling. Economizer shall be compatible with separate CO_2 sensor accessory; economizer dampers shall open when indoor CO_2 level rises above predetermined set point. Economizer shall include enthalpy control and damper actuator.

10. Thermostat Controls:

    a. TEMP System programmable communicating multi-stage thermostat with fan switch, time clock, LCD display, °F/°C capability, and CCN (Carrier Comfort Network®) compatibility.

    b. Commercial Electronic Thermostat with 7-day time clock, auto-changeover, multi-stage capability, and large LCD temperature display.

11. Overhead Suspension Package:

    Package shall include necessary brackets to support units in a horizontal ceiling installation.

12. CO_2 Sensor:

    Sensor shall provide the ability to signal the economizer to open when the space CO_2 level exceeds the predetermined setpoint. Sensor shall have the capability of being connected to Comfort System relay pack or to economizer using field-supplied and field-installed Honeywell dc adapter no. Q769C1004.

13. Condensate Drain Trap:

    Trap shall have transparent, serviceable design for easy cleaning. Kit shall include overflow shutoff switch and wiring harness for connection to an alarm if desired.

14. UV-C Germicidal Lamps:

    a. UV-C emitters and fixtures shall be specifically designed for use inside an HVAC system. An ASME nozzled test apparatus using a 45°F (7.2°C) airstream moving at not less than 400 fpm (189 liters/sec.) shall measure individual lamp output. Lamp output at 253.7 nm shall not be less than $10\mu W/cm^2$ per inch of arc length measured at a distance of one meter.

    b. UV-C power supplies shall be high efficiency, electric type which are matched to the emitters and are capable of producing the specified output intensity with an input power no more than 80 watts.

    c. Emitters and fixtures shall be installed in sufficient quantity and arranged so as to provide an equal distribution of UV-C energy on the coil and drain pan.

    d. The minimum UV-C energy striking the leading edge of the coil fins shall be not less than $820\ \mu W/cm^2$ at the closest point and through placement, not less than 60% of that value at the farthest point. Equal amounts are to strike the drain pan, either directly or indirectly through reflection.

Copyright 2009 Carrier Corp. • 7310 W. Morris St. • Indianapolis, IN 46231 Printed in U.S.A. Edition Date: 10/09 **Catalog No: 40RU−02PD**

Manufacturer reserves the right to change, at any time, specifications and designs without notice and without obligations. Replaces: 40RU−01PD