40RU
Packaged Air−Handling Units
60 Hz
With Puron® (R−410A) Refrigerant
Sizes 07, 08, 12, 14, 16

Carrier
turn to the experts

Installation, Start−Up and Service Instructions

TABLE OF CONTENTS

SAFETY CONSIDERATIONS 1
PRE-INSTALLATION 2
Moving and Storage 2
Rigging 2
INSTALLATION 2–22
General 2
Uncrating 2
Accessories 2
Unit Positioning 12
Unit Isolation 13
Refrigerant and Chilled Water Piping Access 13
Refrigerant Piping 13
Chilled Water Piping 17
Condensate Drain 18
Fan Motors and Drives 18
Power Supply and Wiring 19
Connecting Ductwork 22
Return-Air Filters 22
START-UP 23
SERVICE 23–36
Panels 23
Fan Motor Lubrication 23
Fan Shaft Bearings 23
Centering Fan Wheel 24
Fan Shaft Position Adjustment 24
Individual Fan Wheel Adjustment 24
Fan Belts 24
Fan Rotation 24
Fan Pulley Alignment 25
Pulley and Drive Adjustment 25
Condensate Drains 25
Return-Air Filters 25
Chilled Water Coil Freeze Protection 25
Coil Removal 25
Cleaning Cooling Coil 25
Cleaning Insulation 25
Replacing Filters 26
START-UP CHECKLIST 39-40

SAFETY CONSIDERATIONS

Improper installation, adjustment, alteration, service, maintenance, or use can cause explosion, fire, electrical shock or other conditions which may cause personal injury or property damage. Consult a qualified installer, service agency, or your distributor or branch for information or assistance. The qualified installer or agency must use factory-authorized kits or accessories when modifying this product. Refer to the individual instructions package

Follow all safety codes. Wear safety glasses and work gloves. Use quenching cloths for brazing operations and have a fire extinguisher available. Read these instructions thoroughly and follow all warnings or cautions attached to the unit. Consult local building codes and appropriate national electrical codes (in USA, ANSI/NFPA70, National Electrical Code (NEC); in Canada, CSA C22.1) for special requirements.

It is important to recognize safety information. This is the safety-alert symbol ⚠. When you see this symbol on the unit and in instructions or manuals, be alert to the potential for personal injury.

Understand the signal words DANGER, WARNING, CAUTION, and NOTE. These words are used with the safety-alert symbol. DANGER identifies the most serious hazards which **will** result in severe personal injury or death. WARNING signifies hazards which **could** result in personal injury or death. CAUTION is used to identify unsafe practices, which **may** result in minor personal injury or product and property damage. NOTE is used to highlight suggestions which **will** result in enhanced installation, reliability, or operation.

⚠ WARNING

ELECTRICAL SHOCK HAZARD

Failure to follow this warning could cause in personal injury or death.

Before performing service or maintenance operations on unit, always turn off main power switch to unit and install lockout tag. Unit may have more than one power switch.

⚠ WARNING

UNIT OPERATION AND SAFETY HAZARD

Failure to follow this warning could cause in personal injury,death and/or equipment damage.

Puron® (R-410A) refrigerant systems operate at higher pressures than standard R-22 systems. Do not use R-22 service equipment or components on Puron refrigerant equipment.

⚠ WARNING

PERSONAL INJURY AND ENVIRONMENTAL HAZARD

Failure to follow this warning could cause in personal injury or death.

Relieve pressure and recover all refrigerant before system repair or final unit disposal.

Wear safety glasses and gloves when handling refrigerants. Keep torches and other ignition sources away from refrigerants and oils.

⚠ CAUTION

CUT HAZARD

Failure to follow this caution may result in personal injury.

Sheet metal parts may have sharp edges or burrs. Use care and wear appropriate protective clothing, safety glasses and gloves when handling parts and servicing 40RU units.

⚠ CAUTION

UNIT OPERATION HAZARD

Failure to follow this caution could cause equipment damage.

Ensure voltage listed on unit data plate agrees with electrical supply provided for the unit.

PRE-INSTALLATION

1. The power supply (v, ph, and Hz) must correspond to that specified on unit rating plate.
2. The electrical supply provided by the utility must be sufficient to handle load imposed by this unit.
3. Refer to Installation, General section (page 2) and Fig. 1 and Fig. 2 for locations of electrical inlets, condensate drain, duct connections, and required clearances before setting unit in place.
4. This installation must conform with local building codes and with the NEC (National Electrical Code) or ANSI (American National Standards Institute)/NFPA (National Fire Protection Association) latest revision. Refer to provincial and local plumbing or wastewater codes and other applicable local codes.

Moving and Storage - To transfer unit from truck to storage site, use a fork truck. Do not stack units more than 2 high during storage. If unit is to be stored for more than 2 weeks before installation, choose a level, dry storage site free from vibration. Do not remove plastic wrap or skid from unit until final installation.

Rigging - All 40RU Series units can be rigged by using the shipping skid. Units are shipped fully assembled. Do not remove shipping skids or protective covering until unit is ready for final placement; damage to bottom panels can result. Use slings and spreader bars as applicable to lift unit.

INSTALLATION

General - Allow the following clearances for service access and airflow:

- Rear: 3 ft (914 mm) [$2^1/_2$ ft (762 mm) with electric heat accessory]
- Front: $2^1/_2$ ft (762 mm)
- Right Side: $3^1/_2$ ft (1067 mm)
- Left Side: $2^1/_2$ ft (762 mm)

For units equipped with an economizer, refer to the accessory installation instructions for additional clearance requirements. Be sure floor, wall, or ceiling can support unit weight (Tables 1A – 1F). See Fig. 1 and Fig. 2 for dimensions.

Uncrating - Move unit as near as possible to final location before removing shipping skid.

Remove metal banding, top skid, and plastic wrap. Examine unit for shipping damage. If shipping damage is evident, file claim with transportation agency. Remove base skid just prior to actual installation.

Check nameplate information against available power supply and model number description in Fig. 3.

NOTE: Be sure to remove the styrofoam shipping pad from the thermostatic expansion valve (TXV). Verify that it has been removed. See Fig. 5.

Accessories - Refer to instructions shipped with each accessory for specific information.

Table 1A — 40RUA Physical Data, English — Cooling Units

UNIT 40RUA*	07	08	12	14	16
NOMINAL CAPACITY (Tons)	6	$7^1/_2$	10	$12^1/_2$	15
OPERATING WEIGHT (lb)					
Base Unit with TXV	381	385	405	670	685
Plenum	175	175	175	225	225
FANS					
Qty...Diam. (in.)	1...15	1...15	1...15	2...15	2...15
Nominal Airflow (cfm)	2400	3000	4000	5000	6000
Airflow Range (cfm)	1800–3000	2250–3750	3000–5000	3750–6250	4500–7500
Nominal Motor Hp (Standard Motor)					
208/230–1–60	1.3	2.4	—	—	—
208/230–3–60 and 460–3–60	2.4	2.4	2.4	2.9	3.7
575–3–60	1.0	2.0	2.0	3.0	3.0
Motor Speed (rpm)					
208/230–1–60	1725	1725	—	—	—
208/230–3–60 and 460–3–60	1725	1725	1725	1725	1725
575–3–60	1725	1725	1725	1725	1725
REFRIGERANT	R–410A				
Operating charge (lb) (approx per circuit)†	3.0	3.0	1.5/1.5	2.0/2.0	2.5/2.5
DIRECT–EXPANSION COIL	Enhanced Copper Tubes, Aluminum Sine–Wave Fins				
Max Working Pressure (psig)	650				
Face Area (sq ft)	6.67	8.33	10.0	13.25	17.67
No. of Splits	1	1	2	2	2
No. of Circuits per Split	12	15	9	12	16
Split Type...Percentage	—	—	Face...50/50		
Rows...Fins/in.	4...15	4...15	4...15	4...15	4...15
PIPING CONNECTIONS,					
Quantity...Size (in.)					
DX Coil — Suction (ODF)	$1...1^1/_8$	$1...1^1/_8$	$2...1^1/_8$	$2...1^1/_8$	$2...1^1/_8$
DX Coil — Liquid Refrigerant (ODF)	$1...^5/_8$		$2...^5/_8$		
Steam Coil, In (MPT)	$1...2^1/_2$		$1...2^1/_2$		
Steam Coil, Out (MPT)	$1...1^1/_2$		$1..1^1/_2$		
Hot Water Coil, In (MPT)	$1...1^1/_2$		1...2		
Hot Water Coil, Out (MPT)	$1...1^1/_2$		1...2		
Condensate (PVC)	$1...1^1/_4$ ODM/1 IDF				
FILTERS	Throwaway — Factory Supplied				
Quantity...Size (in.)	4...16 x 24 x 2			4...16 x 20 x 2 4...16 x 24 x 2	
Access Location	Either Side				
STEAM COIL‡					
Max Working Pressure (psig at 260° F)	20				
Total Face Area (sq ft)	6.67	6.67	6.67	13.33	13.33
Rows...Fins/in.	1...9	1...9	1...9	1...10	1...10
HOT WATER COIL‡					
Max Working Pressure (psig)	150				
Total Face Area (sq ft)	6.67	6.67	6.67	13.33	13.33
Rows...Fins/in.	2...8.5	2...8.5	2...8.5	2...8.5	2...8.5
Water Volume					
(gal)	8.3		13.9		
(ft^3)	1.1		1.85		

LEGEND

DX — Direct Expansion
TXV — Thermostatic Expansion Valve
† Units are shipped without refrigerant charge.
‡ Field installed accessory only.

40RU

Table 1B — 40RUA Physical Data, SI — Cooling Units

UNIT 40RUA*	07	08	12	14	16
NOMINAL CAPACITY (kW)	21	26	35	43	52
OPERATING WEIGHT (kg)					
Base Unit with TXV	173	175	184	304	311
Plenum	80	80	80	102	102
FANS					
Qty...Diam. (mm)	1...381	1...381	1...381	2...381	2...381
Nominal Airflow (L/s)	1133	1604	1888	2360	2831
Airflow Range (L/s)	850–1416	1203–2006	1416–2360	1770–2949	2124–3539
Nominal Motor kW (Standard Motor)					
208/230–1–60	0.97	1.79	—	—	—
208/230–3–60 and 460–3–60	1.79	1.79	1.79	2.16	2.16
575–3–60	0.75	1.49	1.49	2.24	2.24
Motor Speed (r/s)					
208/230–1–60	28.8	28.8	—	—	—
208/230–3–60 and 460–3–60	28.8	28.8	28.8	28.8	28.8
575–3–60	28.8	28.8	28.8	28.8	28.8
REFRIGERANT	R–410A				
Operating charge (kg) (approx per circuit)†	1.36	1.36	0.68/0.68	0.90/0.90	1.13/1.13
DIRECT–EXPANSION COIL	Enhanced Copper Tubes, Aluminum Sine–Wave Fins				
Max Working Pressure (kPag)	4481				
Face Area (sq m)	0.62	0.77	0.93	0.93	1.64
No. of Splits	1	1	2	2	2
No. of Circuits per Split	12	15	9	12	16
Split Type...Percentage	—	—	Face...50/50		
Rows...Fins/m	4...591	4...591	4...591	4...591	4...591
PIPING CONNECTIONS,					
Quantity...Size (in.)					
DX Coil — Suction (ODF)	1...1 1/8	1...1 1/8	2...1 1/8	2...1 1/8	2...1 1/8
DX Coil — Liquid Refrigerant (ODF)	1...5/8		2...5/8		
Steam Coil, In (MPT)	1...2 1/2		1...2 1/2		
Steam Coil, Out (MPT)	1...1 1/2		1..1 1/2		
Hot Water Coil, In (MPT)	1...1 1/2		1...2		
Hot Water Coil, Out (MPT)	1...1 1/2		1...2		
Condensate (PVC)	1...1 1/4 ODM/1 IDF				
FILTERS	Throwaway — Factory Supplied				
Quantity...Size (mm)	4...406 x 610 x 51			4...406 x 508 x 51 4...406 x 610 x 51	
Access Location	Either Side				
STEAM COIL‡					
Max Working Pressure (kPag at 126°C)	138				
Total Face Area (sq m)	0.62	0.62	0.62	1.24	1.24
Rows...Fins/m	1...355	1...355	1...355	1...394	1...394
HOT WATER COIL‡					
Max Working Pressure (kPag)	1034				
Total Face Area (sq m)	0.62	0.62	0.62	1.24	1.24
Rows...Fins/m	2...335	2...335	2...335	2...335	2...335
Water Volume					
(L)	31.4			52.6	
(m^3)	0.031			0.052	

LEGEND

DX — Direct Expansion

TXV — Thermostatic Expansion Valve

† Units are shipped without refrigerant charge.

‡ Field installed accessory only.

Table 1C — 40RUQ Physical Data, English — Heat Pump Units

UNIT 40RUQ*	07	08	12	16
NOMINAL CAPACITY (Tons)	6	$7^{1}/_{2}$	10	15
OPERATING WEIGHT (lb)				
Base Unit with TXV	385	385	427	713
Plenum	175	175	175	225
FANS				
Qty...Diam. (in.)	1...15	1...15	1...15	2...15
Nominal Airflow (cfm)	2400	3000	4000	6000
Airflow Range (cfm)	1800–3000	2250–3750	3000–5000	4500–7500
Nominal Motor Hp (Standard Motor)				
208/230–1–60	1.3	2.4	—	—
208/230–3–60 and 460–3–60	2.4	2.4	2.4	3.7
575–3–60	1.0	2.0	2.0	3.0
Motor Speed (rpm)				
208/230–1–60	1725	1725	—	—
208/230–3–60 and 460–3–60	1725	1725	1725	1725
575–3–60	1725	1725	1725	1725
REFRIGERANT	R–410A			
Operating charge (lb) (approx per circuit)†	3.0	3.0	2.0/2.0	3.0/3.0
DIRECT–EXPANSION COIL	Enhanced Copper Tubes, Aluminum Sine–Wave Fins			
Max Working Pressure (psig)	650			
Face Area (sq ft)	8.33	8.33	10.0	16.56
No. of Splits	1	1	2	2
No. of Circuits per Split	15	12	9	10
Split Type...Percentage	—	—	Face...50/50	Face...50/50
Rows...Fins/in.	3...15	4...15	4...15	4...15
PIPING CONNECTIONS,				
Quantity...Size (in.)				
DX Coil — Suction (ODF)	1...$1^{1}/_{8}$	1...$1^{1}/_{8}$	2...$1^{1}/_{8}$	2...$1^{1}/_{8}$
DX Coil — Liquid Refrigerant (ODF)	1...$^{5}/_{8}$	1...$^{5}/_{8}$	2...$^{5}/_{8}$	2...$^{5}/_{8}$
Steam Coil, In (MPT)	1...$2^{1}/_{2}$	1...$2^{1}/_{2}$	1...$2^{1}/_{2}$	1...$2^{1}/_{2}$
Steam Coil, Out (MPT)	1...$1^{1}/_{2}$	1...$1^{1}/_{2}$	1...$1^{1}/_{2}$	1...$1^{1}/_{2}$
Hot Water Coil, In (MPT)	1...$1^{1}/_{2}$	1...$1^{1}/_{2}$	1...$1^{1}/_{2}$	1...2
Hot Water Coil, Out (MPT)	1...$1^{1}/_{2}$	1...$1^{1}/_{2}$	1...$1^{1}/_{2}$	1...2
Condensate (PVC)	1...$1^{1}/_{4}$ ODM/1 IDF			
FILTERS	Throwaway — Factory Supplied			
Quantity...Size (in.)	4...16 x 24 x 2			4...16 x 20 x 2 4...16 x 24 x 2
Access Location	Either Side			
STEAM COIL‡				
Max Working Pressure (psig at 260° F)	20			
Total Face Area (sq ft)	6.67	6.67	6.67	13.33
Rows...Fins/in.	1...9	1...9	1...9	1...10
HOT WATER COIL‡				
Max Working Pressure (psig)	150			
Total Face Area (sq ft)	6.67	6.67	6.67	13.33
Rows...Fins/in.	2...8.5	2...8.5	2...8.5	2...8.5
Water Volume				
(gal)	8.3			13.9
(ft^3)	1.1			1.85

LEGEND
- **DX** — Direct Expansion
- **TXV** — Thermostatic Expansion Valve
- † Units are shipped without refrigerant charge.
- ‡ Field installed accessory only.

40RU

Table 1D — 40RUQ Physical Data, SI — Heat Pump Units

UNIT 40RUQ*	07	08	12	16
NOMINAL CAPACITY (kW)	21	26	35	52
OPERATING WEIGHT (kg)				
Base Unit with TXV	175	175	194	323
Plenum	80	80	80	102
FANS				
Qty...Diam. (mm)	1...381	1...381	1...381	2...381
Nominal Airflow (L/s)	1133	1604	1888	2831
Airflow Range (L/s)	850–1416	1203–2006	1416–2360	2124–3539
Nominal Motor kW (Standard Motor)				
208/230–1–60	0.97	1.79	—	—
208/230–3–60 and 460–3–60	1.79	1.79	1.79	2.76
575–3–60	0.75	1.49	1.49	2.24
Motor Speed (r/s)				
208/230–1–60	28.8	28.8	—	—
208/230–3–60 and 460–3–60	28.8	28.8	28.8	28.8
575–3–60	28.8	28.8	28.8	28.8
REFRIGERANT	R–410A			
Operating charge (kg) (approx per circuit)†	1.36	1.36	0.91/0.91	1.36/1.36
DIRECT–EXPANSION COIL	Enhanced Copper Tubes, Aluminum Sine–Wave Fins			
Max Working Pressure (kPag)	4482			
Face Area (sq m)	0.77	0.77	0.93	1.54
No. of Splits	1	1	2	2
No. of Circuits per Split	12	12	9	10
Split Type...Percentage	—	—	Face...50/50	Face...50/50
Rows...Fins/m	3...591	3...591	3...591	4...591
PIPING CONNECTIONS,				
Quantity...Size (in.)				
DX Coil — Suction (ODF)	1...1 1/8	1...1 1/8	2...1 1/8	2...1 1/8
DX Coil — Liquid Refrigerant (ODF)	1...5/8	1...5/8	2...5/8	2...5/8
Steam Coil, In (MPT)	1...2 1/2	1...2 1/2	1...2 1/2	1...2 1/2
Steam Coil, Out (MPT)	1...1 1/2	1...1 1/2	1...1 1/2	1...1 1/2
Hot Water Coil, In (MPT)	1...1 1/2	1...1 1/2	1...1 1/2	1...2
Hot Water Coil, Out (MPT)	1...1 1/2	1...1 1/2	1...1 1/2	1...2
Condensate (PVC)	1...1 1/4 ODM/1 IDF			
FILTERS	Throwaway — Factory Supplied			
Quantity...Size (mm)	4...406 x 610 x 51			4...406 x 508 x 51 4...406 x 610 x 51
Access Location	Either Side			
STEAM COIL‡				
Max Working Pressure (kPag at 126° C)	138			
Total Face Area (sq m)	0.62	0.62	0.62	1.24
Rows...Fins/m	1...355	1...355	1...355	1...394
HOT WATER COIL‡				
Max Working Pressure (kPag)	1034			
Total Face Area (sq m)	0.62	0.62	0.62	1.24
Rows...Fins/m	2...335	2...335	2...335	2...335
Water Volume				
(L)	31.4			52.6
(m^3)	0.031			0.052

LEGEND
- **DX** — Direct Expansion
- **TXV** — Thermostatic Expansion Valve
- † Units are shipped without refrigerant charge.
- ‡ Field installed accessory only.

Table 1E — 40RUS Physical Data, English — Chilled Water Units

UNIT 40RUS*	08	12	14	16
NOMINAL CAPACITY (Tons)	$7^{1}/_{2}$	10	$12^{1}/_{2}$	15
OPERATING WEIGHT (lb)				
Base Unit	390	391	661	677
Plenum	175	175	225	225
FANS				
Qty...Diam. (in.)	1...15	1...15	2...15	2...15
Nominal Airflow (cfm)	3000	4000	5000	6000
Airflow Range (cfm)	2250–3750	3000–5000	3750–6250	4500–7500
Nominal Motor Hp (Standard Motor)				
208/230–1–60	2.4	—	—	—
208/230–3–60 and 460–3–60	2.4	2.4	2.9	3.7
575–3–60	2.0	2.0	3.0	3.0
Motor Speed (rpm)				
208/230–1–60	1725	—	—	—
208/230–3–60 and 460–3–60	1725	1725	1725	1725
575–3–60	1725	1725	1725	1725
CHILLED WATER COIL	Enhanced Copper Tubes, Aluminum Sine–Wave Fins			
Max Working Pressure (psig)	435			
Face Area (sq ft) – Upper	8.3	9.9	8.3	8.3
Face Area (sq ft) – Lower	—	—	5.5	8.3
Rows...Fins/in.	3...15			
PIPING CONNECTIONS, Quantity...Size (in.)				
Chilled Water — In	1...$1^{3}/_{8}$ ODF	2...$1^{3}/_{8}$ ODF	2...$1^{3}/_{8}$ ODM	2...$1^{3}/_{8}$ ODM
Chilled Water — Out	1...$1^{3}/_{8}$ ODF	2...$1^{3}/_{8}$ ODF	2...$1^{3}/_{8}$ ODM	2...$1^{3}/_{8}$ ODM
Steam Coil, In (MPT)	1...$2^{1}/_{2}$			
Steam Coil, Out (MPT)	1...$^{1}/_{2}$			
Hot Water Coil, In (MPT)	1...$1^{1}/_{2}$		1...2	
Hot Water Coil, Out (MPT)	1...$1^{1}/_{2}$		1...2	
Condensate (PVC)	1...$1^{1}/_{4}$ ODM/1 IDF			
FILTERS	Throwaway — Factory Supplied			
Quantity...Size (in.)	4...16 x 24 x 2		4...16 x 20 x 2 4...16 x 24 x 2	
Access Location	Either Side			
STEAM COIL‡				
Max Working Pressure (psig at 260° F)	20			
Total Face Area (sq ft)	6.67	6.67	13.33	13.33
Rows...Fins/in.	1...9	1...9	1...9	1...10
HOT WATER COIL‡				
Max Working Pressure (psig)	150			
Total Face Area (sq ft)	6.67	6.67	13.33	13.33
Rows...Fins/in.	2...8.5	2...8.5	2...8.5	2...8.5
Water Volume				
(gal)	8.3		13.9	
(ft^3)	1.1		1.85	

LEGEND
‡ Field installed accessory only.

40RU

Table 1F — 40RUS Physical Data, SI — Chilled Water Units

UNIT 40RUS*	08	12	14	16
NOMINAL CAPACITY (kW)	26	35	43	52
OPERATING WEIGHT (kg)				
Base Unit	177	177	300	307
Plenum	80	80	102	102
FANS				
Qty...Diam. (mm)	1...381	1...381	2...381	2...381
Nominal Airflow (L/s)	1416	1888	2360	2831
Airflow Range (L/s)	1062–1770	1416–2360	1770–2949	2124–3539
Nominal Motor kW (Standard Motor)				
208/230–1–60	1.79	—	—	—
208/230–3–60 and 460–3–60	1.79	1.79	1.79	2.76
575–3–60	1.49	1.49	1.49	2.24
Motor Speed (r/s)				
208/230–1–60	28.8	—	—	—
208/230–3–60 and 460–3–60	28.8	28.8	28.8	28.8
575–3–60	28.8	28.8	28.8	28.8
CHILLED WATER COIL	Enhanced Copper Tubes, Aluminum Sine–Wave Fins			
Max Working Pressure (kPag)	2999			
Face Area (sq m) – Upper	0.77	0.91	0.77	0.77
Face Area (sq m) – Lower	—	—	0.51	0.77
Rows...Fins/m	3...591			
PIPING CONNECTIONS, Quantity...Size (in.)				
Chilled Water — In	1...$1^{3}/_{8}$ ODF	2...$1^{3}/_{8}$ ODF	2...$1^{3}/_{8}$ ODM	2...$1^{3}/_{8}$ ODM
Chilled Water — Out	1...$1^{3}/_{8}$ ODF	2...$1^{3}/_{8}$ ODF	2...$1^{3}/_{8}$ ODM	2...$1^{3}/_{8}$ ODM
Steam Coil, In (MPT)	1...$2^{1}/_{2}$			
Steam Coil, Out (MPT)	1...$^{1}/_{2}$			
Hot Water Coil, In (MPT)	1...$1^{1}/_{2}$		1...2	
Hot Water Coil, Out (MPT)	1...$1^{1}/_{2}$		1...2	
Condensate (PVC)	1...$1^{1}/_{4}$ ODM/1 IDF			
FILTERS	Throwaway — Factory Supplied			
Quantity...Size (mm)	4...406 x 610 x 51		4...406 x 508 x 51 4...406 x 610 x 51	
Access Location	Either Side			
STEAM COIL‡				
Max Working Pressure (kPag at 125° C)	138			
Total Face Area (sq m)	0.62	0.62	1.24	1.24
Rows...Fins/m	1...355	1...355	1...355	1...394
HOT WATER COIL‡				
Max Working Pressure (kPag)	1034			
Total Face Area (sq m)	0.62	0.62	1.24	1.24
Rows...Fins/m	2...335	2...335	2...335	2...335
Water Volume				
(L)	31.4		52.6	
(m^3)	0.031		0.052	

LEGEND
‡ Field installed accessory only.

LEGEND

TXV — Thermostatic Expansion Valve

NOTES:
1. Dimensions in [ ] are in millimeters.
2. ➡ Direction of airflow.
3. Recommended clearance:
   - Rear: 3 in. [914 mm] (2 ft, 6 in. [762 mm] with electric heat accessory)
   - Front: 2 ft, 6 in. [762 mm]
   - Right Side: 2 ft, 6 in. [762 mm]
   - Left Side: 2 ft, 6 in. [762 mm]
   - Local codes or jurisdiction may prevail.
4. Liquid piping not supplied by Carrier.
5. Duct flange is factory supplied and field installed.

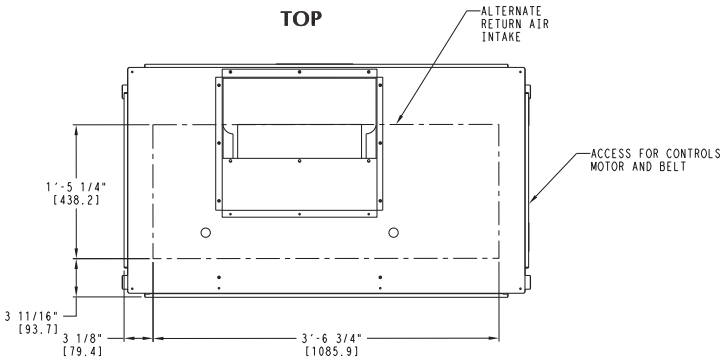

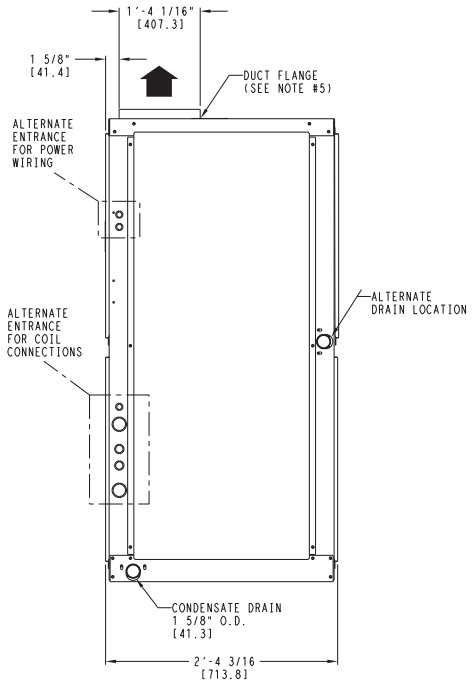

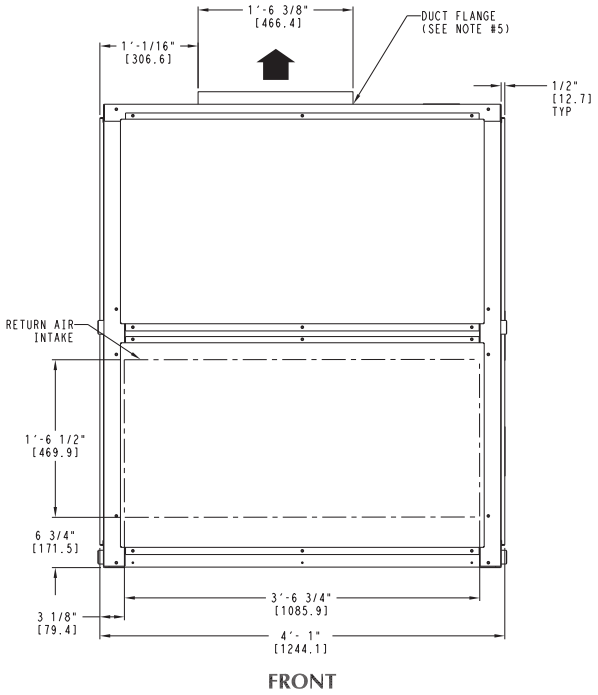

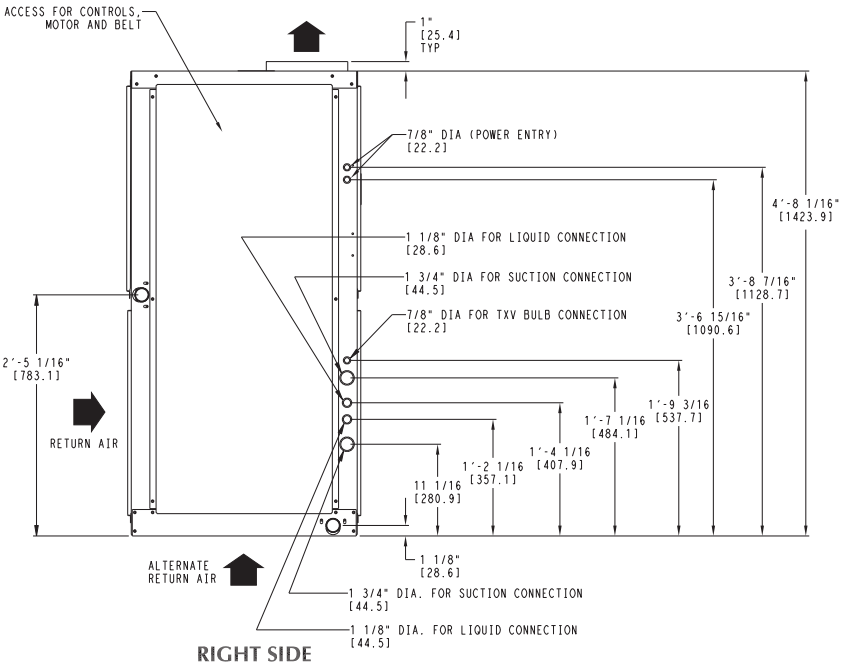

UNIT	UNIT WEIGHT lb (kg)
40RUA07	381 (173)
40RUA08	385 (175)
40RUA12	405 (184)
40RUQ07	385 (175)
40RUQ08	385 (175)
40RUQ12	427(194)
40RUS08	390 (177)
40RUS12	391 (177)

C10679

Fig. 1 - Dimensions – Sizes 07 - 12

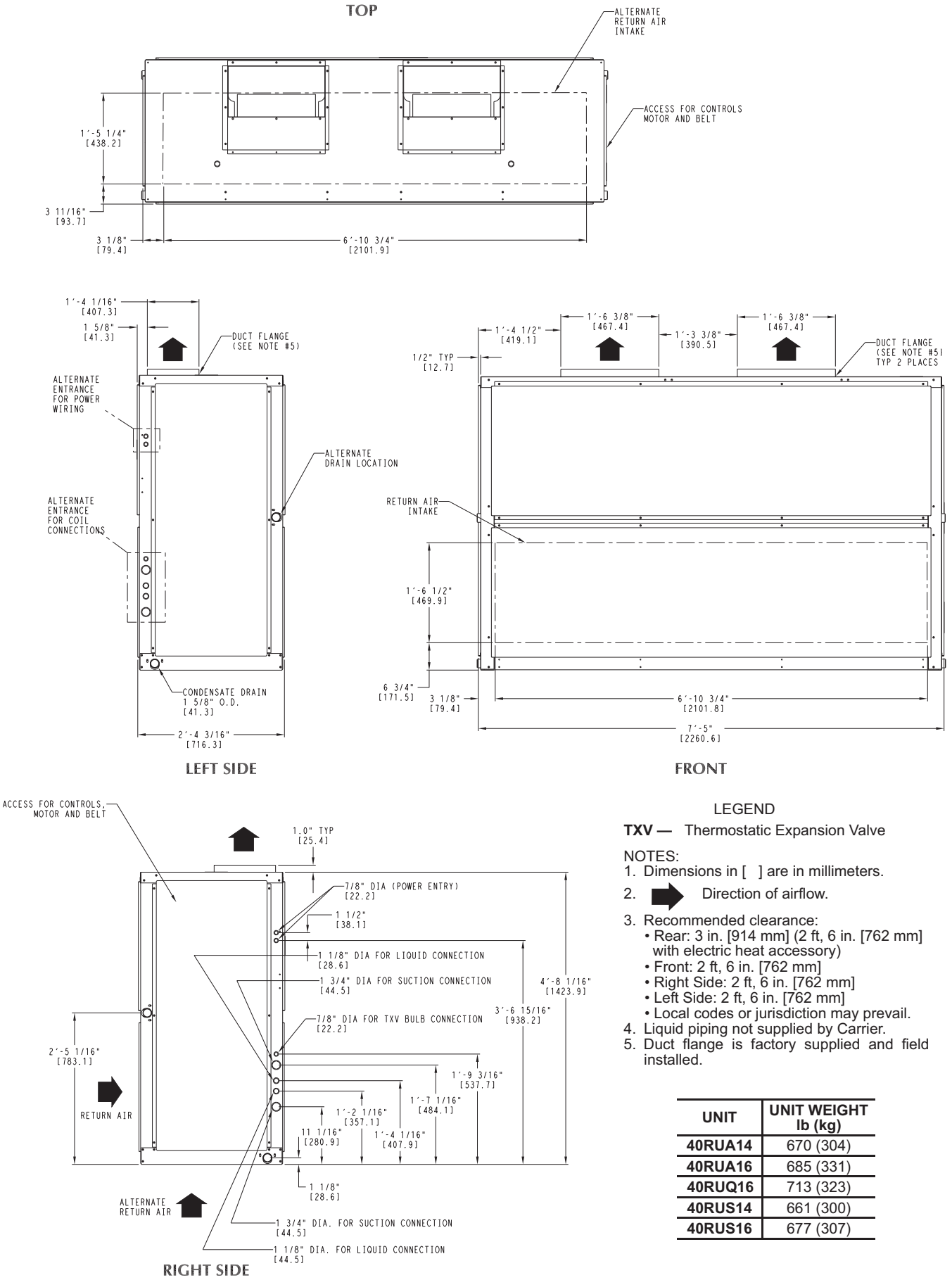

LEGEND

TXV — Thermostatic Expansion Valve

NOTES:
1. Dimensions in [ ] are in millimeters.
2. ➡ Direction of airflow.
3. Recommended clearance:
   - Rear: 3 in. [914 mm] (2 ft, 6 in. [762 mm] with electric heat accessory)
   - Front: 2 ft, 6 in. [762 mm]
   - Right Side: 2 ft, 6 in. [762 mm]
   - Left Side: 2 ft, 6 in. [762 mm]
   - Local codes or jurisdiction may prevail.
4. Liquid piping not supplied by Carrier.
5. Duct flange is factory supplied and field installed.

UNIT	UNIT WEIGHT lb (kg)
40RUA14	670 (304)
40RUA16	685 (331)
40RUQ16	713 (323)
40RUS14	661 (300)
40RUS16	677 (307)

Fig. 2 - Dimensions – Sizes 14 and 16

1	2	3	4	5	6	7	8	9	10	11	12	13	14	15	16	17	18
4	0	R	U	A	A	1	4	A	1	A	6	–	0	A	0	A	0

Model Type
40RU = Carrier Fan Coil
Puron® R–410A Refrigerant

Type of Coil
A = Standard DX Coil
Q = DX Coil for Heat Pump Duty
S = Chilled Water Coil

Refrigerant Options
A = None

Nominal Tonnage
07 = 6 Tons
08 = 7.5 Tons
12 = 10 Tons
14 = 12.5 Tons
16 = 15 Tons

Not Used
A = Place Holder

Indoor Fan Options
1 = Fan Drive and Motor - Low / Motor Efficiency - Standard
2 = Fan Drive and Motor - Med / Motor Efficiency - Standard
3 = Fan Drive and Motor - High / Motor Efficiency - Standard

Coil Options
A = Al/Cu

Voltage
1 = 575/3/60
3 = 208/230/1/60 (07 and 08 Only)
5 = 208/230/3/60 (Size 16 and Indoor Fan 3 Only)
6 = 460/3/60

Design Rev
– = Catalog Model Number
1 = Design Revision (original)

Not Used
0 = Place Holder

Not Used
A = Place Holder

Service Options
0 = Non-Painted Cabinet
1 = Painted Cabinet

Not Used
A = Place Holder

Brand / Packaging
0 = Standard

C10681

Fig. 3 - Model Number Nomenclature

POSITION NUMBER	1	2	3	4	5	6	7	8	9	10
TYPICAL	2	6	1	0	G	1	2	3	4	5

POSITION	DESIGNATES
1–2	Week of manufacture (fiscal calendar)
3–4	Year of manufacture (“10” = 2010)
5	Manufacturing location (G = ETP, Texas, USA)
6–10	Sequential number

C10682

Fig. 4 - Serial Number Nomenclature

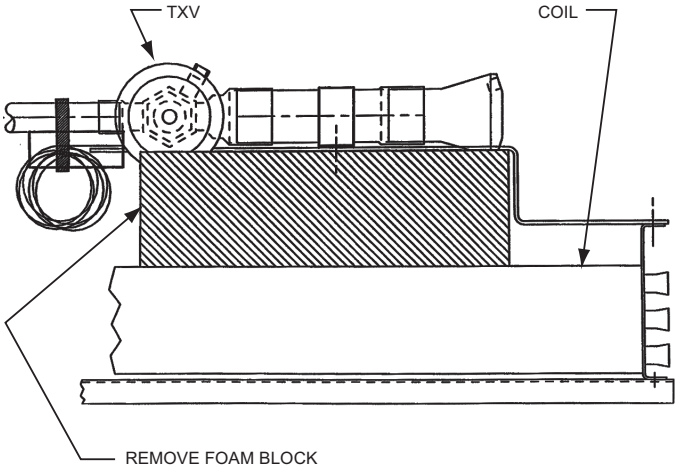

LEGEND
TXV — Thermostatic Expansion Valve

C10683

Fig. 5 - Foam Block Location

Unit Positioning - The unit can be mounted on the floor for vertical application with return air entering the face of the unit and supply air discharging vertically through the top of the unit. The unit can also be applied in a horizontal arrangement with return air entering horizontally and the supply air discharging horizontally. When applying the unit in a horizontal arrangement, ensure the condensate drain pan is located at the bottom center of the unit for adequate condensate disposal. See Fig. 6 for condensate connections for each unit position.

IMPORTANT: Do NOT attempt to install unit with return air entering top panel of unit. Condensate will not drain from unit.

Typical positioning and alternate return air locations are shown in Fig. 6. Alternate return air locations can be used by moving the unit panel from the alternate return air location to the standard return air location. Refer to overhead suspension accessory drawing (Fig. 7) for preferred suspension technique. The unit needs support underneath to prevent sagging.

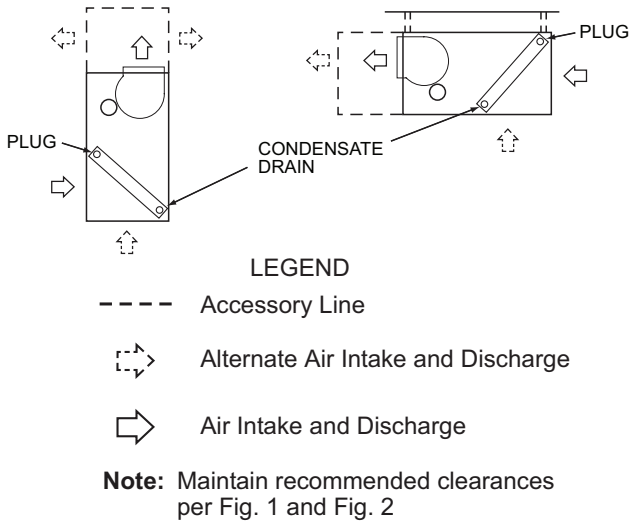

Fig. 6 - Typical Unit Positioning

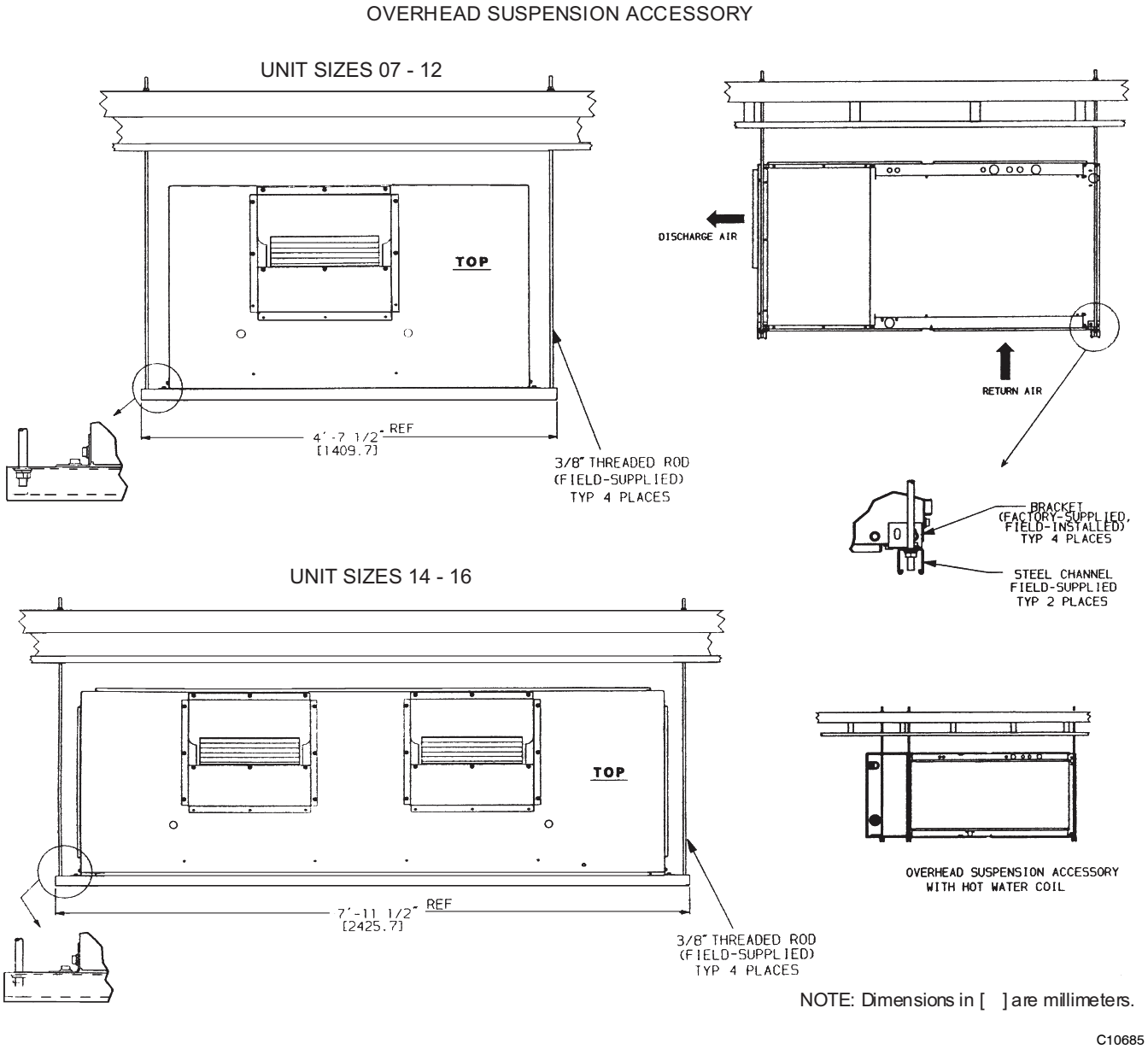

Fig. 7 - Preferred Suspension Technique

Unit Isolation - Where extremely quiet operation is essential, install isolators between floor and base of unit, or between ceiling and top section of unit.

Be sure that unit is level and adequately supported. Use channels at front and sides of unit for reference points when leveling.

Refrigerant and Chilled Water Piping Access - The 40RU Series units come with standard knockouts for refrigerant and chilled water piping. These knockouts are located on both sides of the unit for installation flexibility. The standard knockouts provide sufficient access to the unit's coils for all 40RUA*07, 08, 12, 14, 16 and 40RUQ*07, 08, 12 units. 40RUQ*16 units, as well as 40RUS*08, 12, 14, and 16 units require additional holes which must be field-fabricated to accommodate the piping. See Fig. 8 for positions and dimensions of the additional access holes required for the 40RUQ*16 and 40RUS units. Recommended access hole use is also listed for all units. Note that Fig. 8 shows the access holes on the control-box side of the unit; this is the side of the unit with the coil headers, so it is used most often for piping access.

IMPORTANT: Do not bury refrigerant piping underground.

Refrigerant Piping - See Tables 1A–1F for refrigerant pipe connection sizes. For ease in brazing, it is recommended that all internal solder joints be made before unit is placed in final position.

The 40RU direct-expansion units have internal factory-installed thermostatic expansion valves (TXVs), distributors, and nozzles for use with R-410A. See Table 2 for part numbers. Knockouts are provided in the unit corner posts for 40RU refrigerant piping. See Fig. 8, which also lists recommended knockouts and access holes to use for each 40RU unit size. Recommended fittings are listed in Table 3.

The sensor bulb capillary tubes must be routed from the TXVs inside the unit through one of the piping access holes. Clamp the TXV sensor bulb on a vertical portion of the suction line, outside the unit. See Fig. 9.

NOTE: Be sure to remove the styrofoam shipping pad from the TXV. Verify that it has been removed. See Fig. 5.

IMPORTANT: Never attach the sensor to the suction manifold. Do NOT mount the sensor on a trapped portion of the suction line.

The 40RU Series evaporator coils have a face-split design. Ensure that lower circuit of coil is first on/last off when connected to the condensing unit and/or system controls. See Fig. 10.

External TXV equalizer connections are provided and factory-brazed into the coil suction manifolds.

If suction line must be horizontal, clamp bulb to suction line at least 45 degrees above bottom, at approximately the 4 o'clock or 8 o'clock position. See Fig.11.

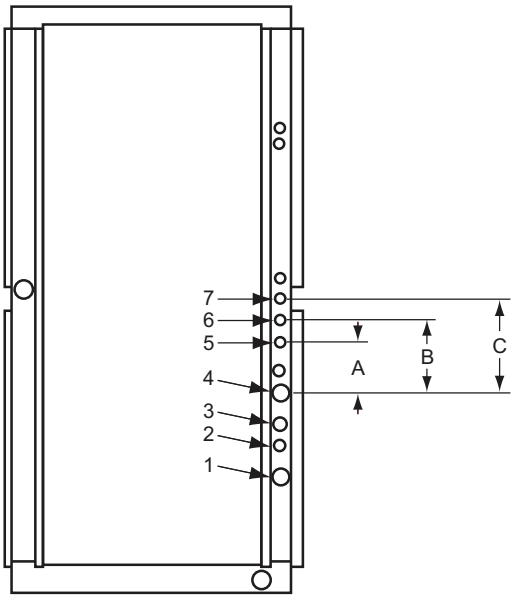

C10686

UNIT	USE HOLE NUMBERS	FIELD–FABRICATED HOLE DIAMATERS in. (mm)			FIELD–FABRICATED HOLE POSITION DIMENSIONS, in. (mm)		
		No. 5	No. 6	No. 7	A	B	C
40RUA*07, 08 40RUQ*07, 08	1, 3	—	—	—	—	—	—
40RUA*12, 14, 16 40RUQ12	1, 2, 3, 4	—	—	—	—	—	—
40RUS*08, 12	4, 5	$1^3/_4$ (44.5)	—	—	6.25 (158.8)	—	—
40RUS*14, 16	4, 5, 6, 7	$1^3/_4$ (44.5)	$1^3/_4$ (44.5)	$1^3/_4$ (44.5)	3.0 (76.2)	6.0 (152.5)	10.5 (266.7)
40RUQ*16	3†, 5, 6, 7	$1^1/8$ (28.6)	$1^1/8$ (28.6)	$1^3/_4$ (44.5)	3.25 (82.6)	6.125 (155.6)	10.38 (263.7)

† Must be enlarged from $1^1/_8$ in. (28.6mm) to $1^3/_4$ in. (44.5mm)
NOTE: Access hole knockouts 1–4 are factory–supplied.

Fig. 8 - Refrigerant and Chilled Water Piping Access Holes

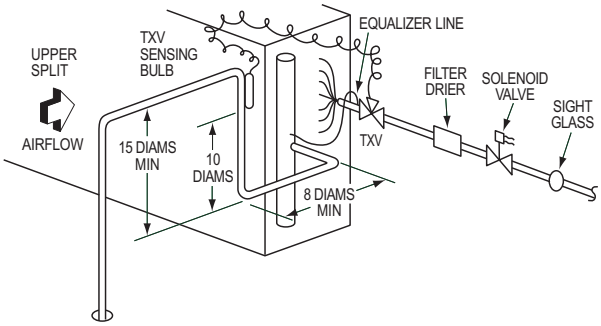

Single Circuit Coil Piping Configuration - RU*07, 08
For single compressor condensing units.

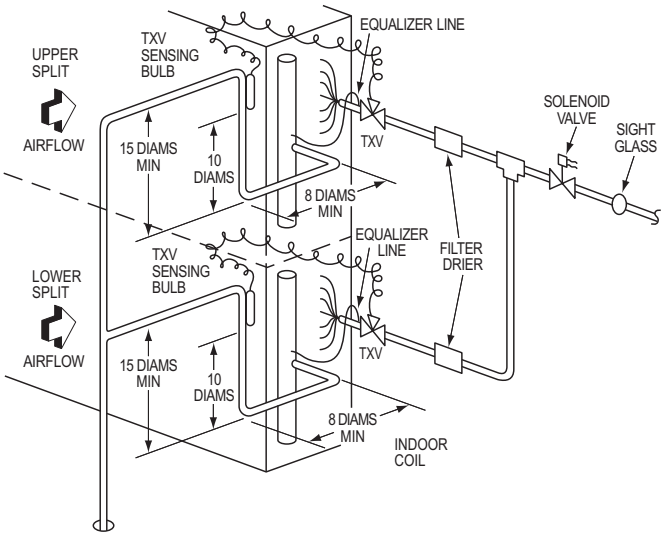

Dual Circuit Coil Piping Configuration - RU*12-16
For single compressor condensing units

LEGEND:
TXV – Thermostatic Expansion Valve
NOTE: Component location arrangemetshown for field installation of sight glasses, solenoid valves, filter driers, and TXV sensing bulbs. The TXVs and equilizer lines are factory installed.

C10687

Fig. 9 - Face-Split Coil Suction and Liquid Line Piping (Typical)

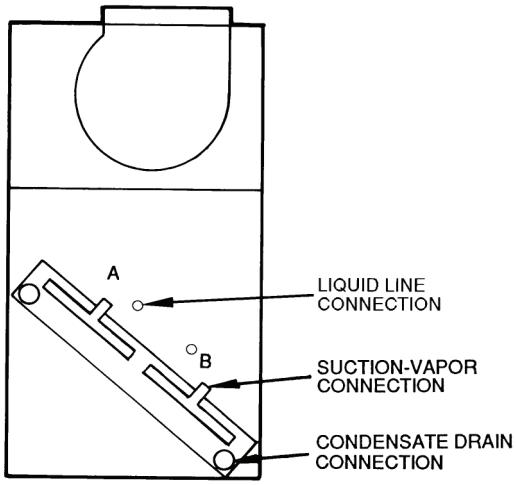

FIRST ON/LAST OFF = B
VERTICAL INSTALLATION

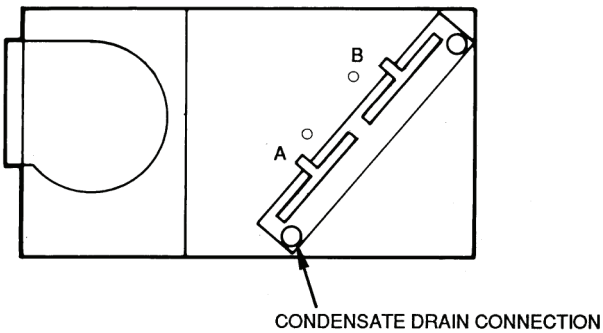

FIRST ON/LAST OFF = A
HORIZONTAL INSTALLATION

C10688

Fig. 10 - Typical Evaporator Coil Connections (40RU)

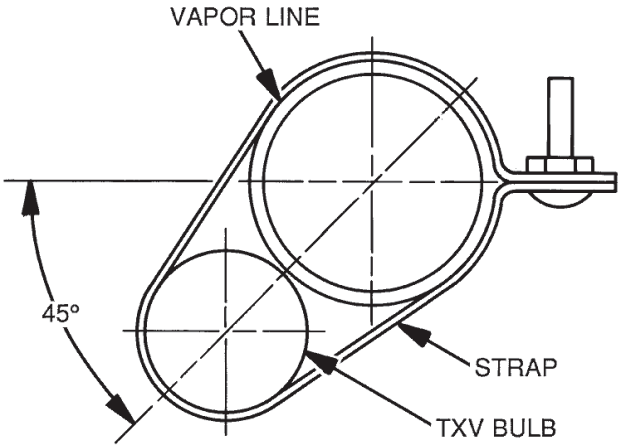

LEGEND
TXV — Thermostatic Expansion Valve
NOTE: The 8 o'clock position is shown above.

C10689

Fig. 11 - TXV Sensing Bulb Location

Table 2 – Factory-Installed Nozzle and Distributor Data

UNIT	COIL TYPE STD	TXV Qty...Part No.	DISTRIBUTOR Qty...Part No.	FEEDER TUBES PER DISTRIBUTOR† Qty...Size (in.)	NOZZLE Qty...Part No.
40RUA*07	4 Row	1...BBIZE–5–GA	1...1135	12...$^1/_4$	1...G4
40RUQ*07	3 Row	1...BBIZE–5–GA	1...1136	15...$^1/_4$	1...G5
40RUA*08	4 Row	1...BBIZE–6–GA	1...1136	15...$^1/_4$	1...G5
40RUQ*08	4 Row	1...BBIZE–8–GA	1...1113	12...$^3/_{16}$	1...G5
40RUA*12	4 Row	2...BBIZE–4–GA	2...1135	ă9...$^1/_4$	2...G3
40RUQ*12	4 Row	2...BBIZE–5–GA	2...1113	9...$^3/_{16}$	2...G3
40RUQ*16	4 Row	2...BBIZE–8–GA	2...1113	10...$^3/_{16}$	2...G5
40RUA*14	4 Row	2...BBIZE–5–GA	2...1113	12...$^3/_{16}$	2...G3
40RUA*16	4 Row	2...BBIZE–6–GA	2...1136	16...$^3/_{16}$	2...G4

† Feeder tube size is $^1/_4$ in. (6.35 mm).
NOTE: Hot gas bypass applications require field–supplied auxiliary side connector.

Table 3 – Fitting Requirements

UNIT	ACCESS HOLE NO.‡	CONNECTION TYPE	CIRCUIT	FITTINGS REQUIRED† (in.)
40RUA*07 40RUQ*07	1	Suction	—	$1^1/_8$ Street Elbow $1^1/_8$ Nipple, $10^5/_8$ L $1^1/_8$ Long Radius Elbow
	3	Liquid	—	$^5/_8$ Street Elbow $^5/_8$ Nipple, $8^5/_8$ L $^5/_8$ Long Radius Elbow
40RUA*08 40RUQ*08	1	Suction	—	$1^1/_8$ Street Elbow $1^1/_8$ Nipple, $8^5/_8$ L $1^1/_8$ Long Radius Elbow
	3	Liquid	—	$^5/_8$ Street Elbow $^5/_8$ Nipple, $8^5/_8$ L $^5/_8$ Long Radius Elbow
40RUS*08 40RUS*12	4	Return	—	$1^3/_8$ Nipple, $4^3/_8$ L $1^3/_8$ Long Radius Elbow $1^3/_8$ Nipple, $7^3/_8$ L $1^3/_8$ Long Radius Elbow
	5	Supply	—	$1^3/_8$ Nipple, $6^5/_8$ L $1^3/_8$ Long Radius Elbow
40RUA*12	1	Suction	Lower	(2) $1^1/_8$ Street Elbow
	2	Liquid	Lower	$^5/_8$ Street Elbow $^5/_8$ Nipple, $8^1/_2$ L $^5/_8$ Long Radius Elbow
	3	Liquid	Upper	$^5/_8$ Street Elbow $^5/_8$ Nipple, $13^1/_2$ L $^5/_8$ Long Radius Elbow
	4	Suction	Upper	$1^1/_8$ Nipple, $5^3/_4$ L $1^1/_8$ Long Radius Elbow $1^1/_8$ Nipple, 12 L $1^1/_8$ Long Radius Elbow

‡ See Fig. 8 for access hole location by number.
† Fittings are listed in order from header or tee stub connection out to access hole in corner support post.

Table 3 – Fitting Requirement (cont)

UNIT	ACCESS HOLE NO.‡	CONNECTION TYPE	CIRCUIT	FITTINGS REQUIRED† (in.)
40RUQ*12	1	Suction	Lower	(2) $1^1/_8$ Street Elbow
	2	Liquid	Lower	$^5/_8$ Street Elbow $^5/_8$ Nipple, $5^1/_2$ L $^5/_8$ Long Radius Elbow
	3	Liquid	Upper	$^5/_8$ Street Elbow $^5/_8$ Nipple, $10^1/_2$ L $^5/_8$ Long Radius Elbow
	4	Suction	Upper	$1^1/_8$ Nipple, $5^5/_8$ L $1^1/_8$ Long Radius Elbow $1^1/_8$ Nipple, 12 L $1^1/_8$ Long Radius Elbow
40RUA*14	1	Suction	Lower	$1^1/_8$ Street Elbow $1^1/_8$ Nipple, $7^5/_8$ L $1^1/_8$ Long Radius Elbow
	2	Liquid	Lower	$^5/_8$ Street Elbow $^5/_8$ Nipple, $1^7/_{16}$ L $^5/_8$ Long Radius Elbow
	3	Liquid	Upper	$^5/_8$ Street Elbow $^5/_8$ Nipple, $11^1/_2$ L $^5/_8$ Long Radius Elbow
	4	Suction	Upper	$1^1/_8$ Nipple, $5^5/_8$ L $1^1/_8$ Long Radius Elbow $1^1/_8$ Nipple, 13 L $1^1/_8$ Long Radius Elbow
40RUA*16	1	Suction	Lower	$1^1/_8$ Street Elbow $1^1/_8$ Nipple, $72^3/_4$ L $1^1/_8$ Long Radius Elbow
	2	Liquid	Lower	$^5/_8$ Street Elbow $^5/_8$ Nipple, $1^3/_8$ L $^5/_8$ Long Radius Elbow
	3	Liquid	Upper	$^5/_8$ Street Elbow $^5/_8$ Nipple, $11^1/_2$ L $^5/_8$ Long Radius Elbow
	4	Suction	Upper	$1^1/_8$ Nipple, $5^5/_8$ L $1^1/_8$ Long Radius Elbow $1^1/_8$ Nipple, 13 L $1^1/_8$ Long Radius Elbow
40RUQ*16	3	Suction	Lower	$1^1/_8$ Nipple, 3 L $11/_8$ Long Radius Elbow
	5	Suction	Lower	$^5/_8$ Nipple, $2^7/_8$ L $^5/_8$ 45° Elbow $^5/_8$ Nipple, $1^5/_8$ L $^5/_8$ Long Radius Elbow
	6	Liquid	Upper	$^5/_8$ Nipple, $2^7/_8$ L $^5/_8$ 45° Elbow $^5/_8$ Nipple, $4^1/_4$ L $^5/_8$ Long Radius Elbow
	7	Suction	Upper	$1^1/_8$ Nipple, 5 L $1^1/_8$ 45° Elbow $1^1/_8$ Nipple, $8^3/_4$ L $1^1/_8$ Long Radius Elbow

‡ See Fig. 8 for access hole location by number.
† Fittings are listed in order from header or tee stub connection out to access hole in corner support post.

Table 3 - Fitting Requirement (cont)

UNIT	ACCESS HOLE NO.‡	CONNECTION TYPE	CIRCUIT	FITTINGS REQUIRED† (in.)
40RUS*14 40RUS*16	4	Supply	Lower	$1^3/_8$ Long Radius Elbow $1^3/_8$ Nipple, $3^3/_4$ L $1^3/_8$ Long Radius Elbow
	5	Return	Lower	$1^3/_8$ Long Radius Elbow $1^3/_8$ Nipple, $3^3/_8$ L $1^3/_8$ Long Radius Elbow
	6	Return	Upper	$1^3/_8$ Long Radius Elbow $1^3/_8$ Nipple, 7 L $1^3/_8$ Long Radius Elbow
	7	Supply	Upper	$1^3/_8$ Long Radius Elbow $1^3/_8$ Nipple, $11^3/_4$ L $1^3/_8$ Long Radius Elbow

‡ See Fig. 8 for access hole location by number.
† Fittings are listed in order from header or tee stub connection out to access hole in corner support post.

Chilled Water Piping - See Tables 1E and 1F for chilled water connection sizes. For ease in brazing, it it recommended that all internal solder joints be made before unit is placed in final position.

Knockouts are provided in the unit corner posts for 40RUS refrigerant piping. Additional field-fabricated access holes are required for 40RUS chilled water piping. See Fig. 8, which lists recommended knockouts and access holes to use for each 40RUS unit size.

To size, design, and install chilled water piping, consult the Carrier System Design manual. See Fig. 12 for an example of a typical installation. Recommended fittings are listed in Table 3.

To access 40RUS coil vents and drains, remove the unit side panel over the coil header. Vent and drain plugs are on the top and bottom of header, respectively. See the Service section for information on preventing coil freeze-up during winter.

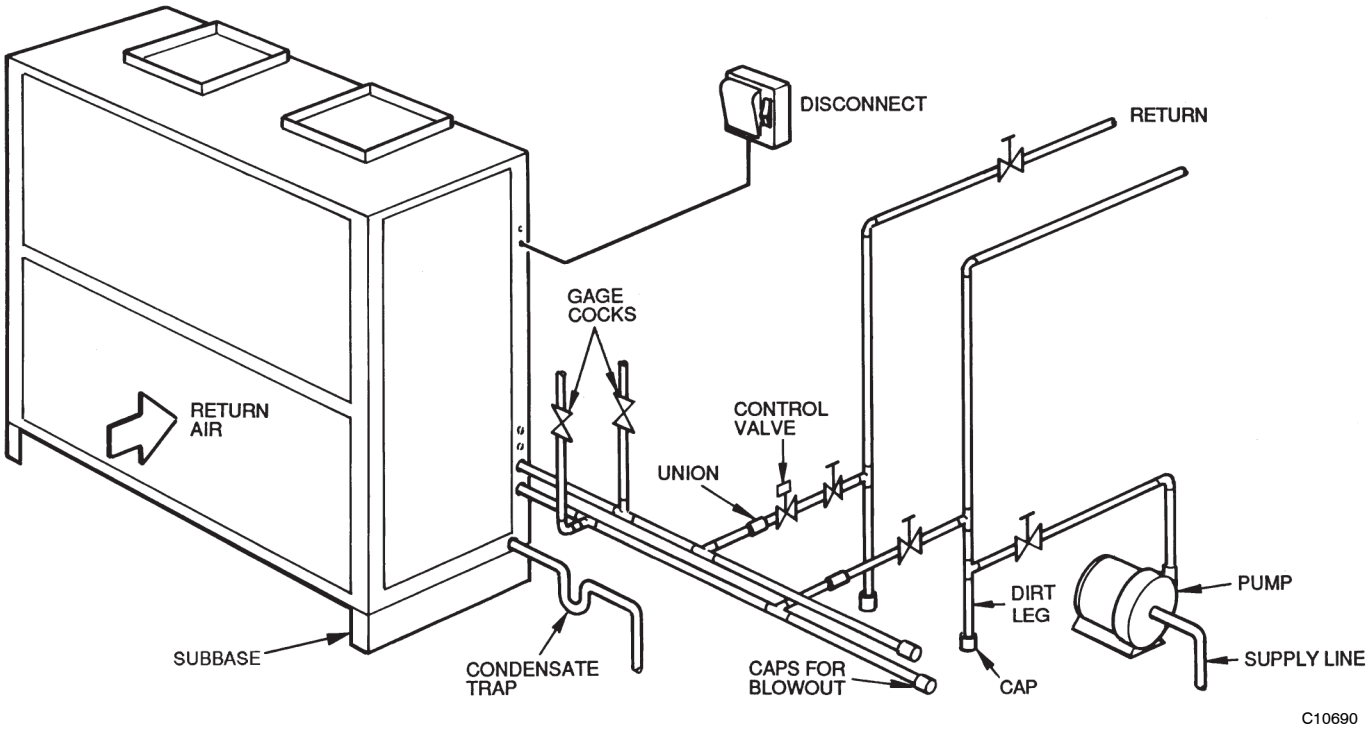

Fig. 12 - Typical 40RUS Chilled Water Piping

Condensate Drain — Install a trapped condensate drain line to unit connection as shown in Fig. 13. The unit drain connection is a PVC stub. See Fig. 14. Some areas may require an adapter to connect to either galvanized steel or copper pipe. For these applications, install a field-supplied threaded PVC adapter.

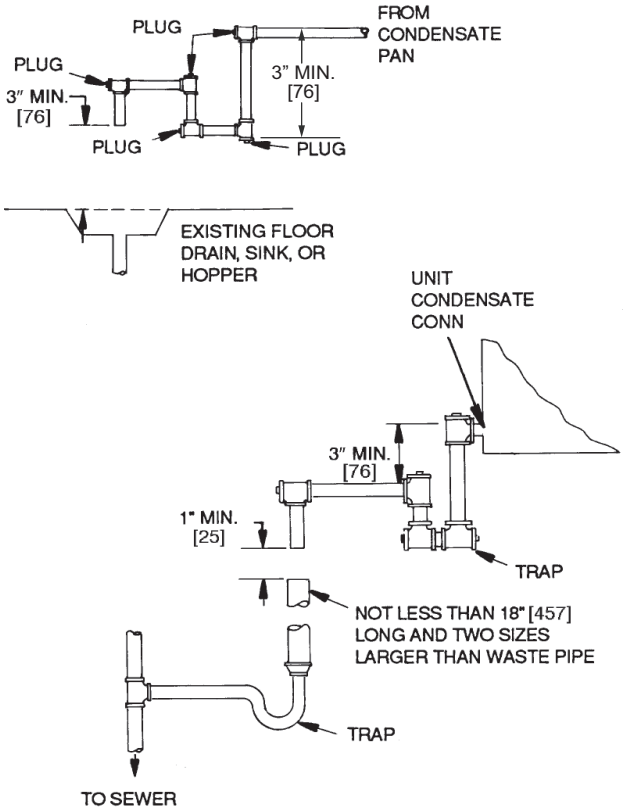

Fig. 13 - Condensate Drains

NOTE: A trap must be installed in the condensate drain line to ensure that the static pressure of fans is balanced with the water column in the drain line and that condensate can drain completely from pan. Without a trap, air can be drawn up drain line until water level in condensate pan becomes equal to static pressure created by fans, preventing complete drainage. Conditions will worsen as filters become dirty.

Install clean-out plugs in trap. Pitch drain line downward to an open floor drain or sump. Provide service clearance around drain line to permit removal of unit panels. Observe all local sanitary codes.

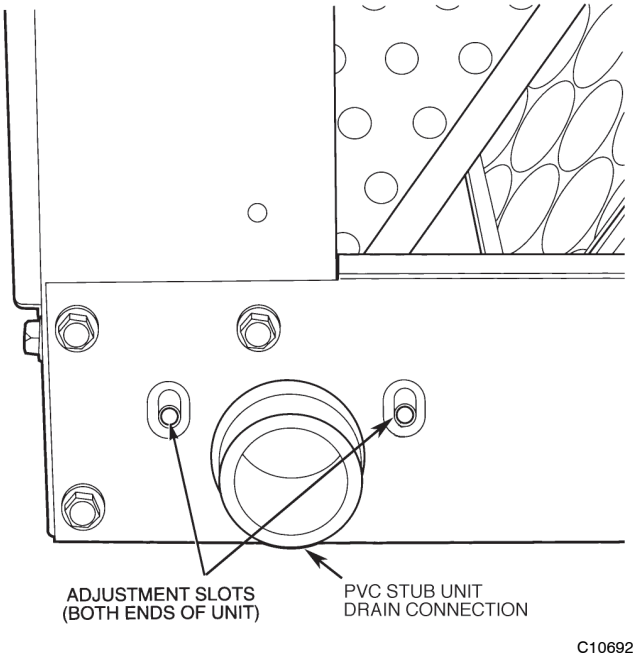

Fig. 14 - Drain Pan Slope Adjustment

As shipped, the unit's condensate drain pan is NOT sloped towards the drain connection. The pan slope must be changed to pitch towards the side of the unit with the drain connection. See Fig. 14. Loosen the 2 screws next to the drain outlet at both ends of the unit, push drain pan down in the slots near the drain connection, and up in the slots on the opposite end. Re-tighten screws. The pan should have a pitch of at least $^1/_4$-in. over its length toward the drain connection.

Fan Motor and Drives - Motor and drive packages are factory installed in all units. The motor and drive packages consist of the following items:

1 — fan motor

1 — adjustable motor pulley

1 — fan pulley

1 — fan belt
(40RUA*07-12, 40RUQ*07-12, 40RUS*08-12 units)

2 — matched fan belts
(40RUA*14-16, 40RUQ*16, 40RUS*14-16 units)

For instructions on changing fan rotation, changing drive speeds and adjusting drives, see Pulley and Drive Adjustment in the Service section.

Power Supply and Wiring - Check the unit data plate to ensure that available power supply matches electrical characteristics of the unit. Provide a disconnect switch with an integrated lock-out feature of size required to provide adequate fan motor starting current. See Tables 4-6 for unit electrical data.

⚠ WARNING

ELECTRICAL SHOCK HAZARD

Failure to follow this warning could result in personal injury or death.

Do not use gas piping as an electrical ground. Unit cabinet must have an uninterrupted, unbroken electrical ground to minimize the possibility of personal injury if an electrical fault should occur. This ground may consist of electrical wire connected to unit ground lug in control compartment, or conduit approved for electrical ground when installed in accordance with NEC (National Electrical Code); ANSI/NFPA 70, latest edition (in Canada, Canadian Electrical Code CSA [Canadian Standards Association] C22.1), and local electrical codes.

⚠ WARNING

FIRE HAZARD

Failure to follow this warning could result in intermittent operation or performance satisfaction.

Do not connect aluminum wire between disconnect switch and fan coil unit. Use only copper wire.
(See Fig. 15)

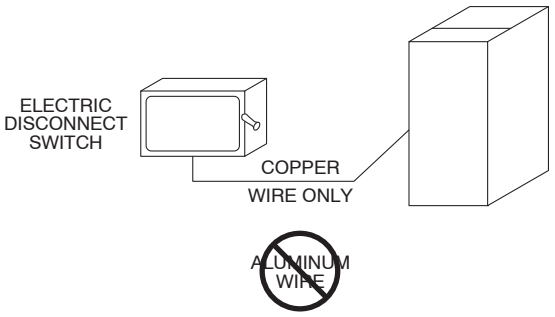

Fig. 15 - Disconnect Switch and Unit

Install disconnect switch and power wiring in accordance with all applicable local codes. See Fig. 15-17 and the unit label diagram. For units with motor sizes less than 5 Hp (3.7 kW), connect power wiring to unit with no. 10 ring terminal. For units with motor sizes of 5 Hp (3.7 kW) or more, connect power wiring with $^1/_4$-in. ring terminal.

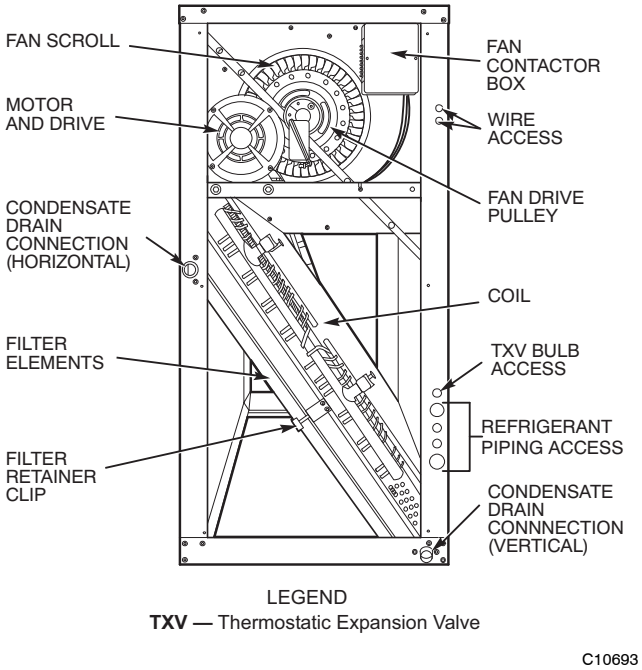

Fig. 16 - Wiring and Service Access (Side Panel Removed)

The 40RU size 07-16 units that have motors wired for 460-v, 3-ph, 60 Hz operation can be field-converted to 208/230-v, 3-ph, 60 Hz operation. Rewire the motor according to the diagram plate on the motor. After reconfiguring the motor, mark the motor specifying 208-v or 230-v operation replacing the 460-v sticker information on the units' corner post.

Fan motors are factory-installed on all units. Indoor-fan contactors are located in the fan contactor box behind the side access panel (see Fig. 16 and 17). Wire the thermostat to the 24-v control circuit terminal block located in the side of the fan contactor control box, according to Fig. 18 or the unit label diagram. If the air handler is part of a split system, complete the wiring from the condensing unit to the thermostat shown in Fig. 18.

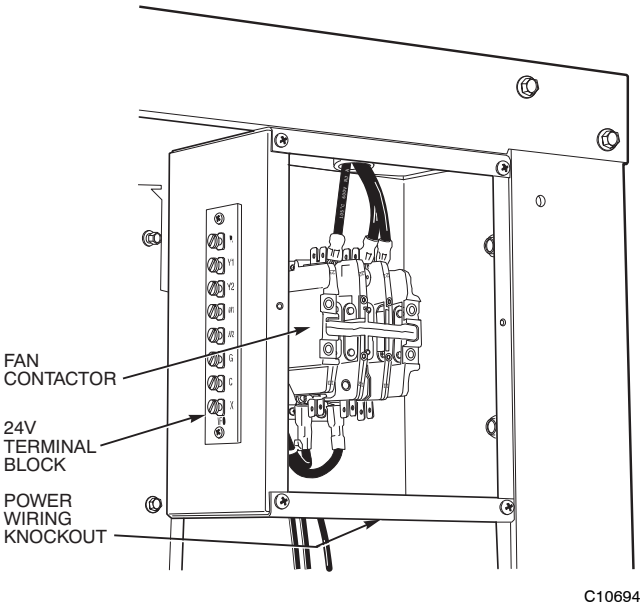

Fig. 17 - Fan Contactor Box and Terminal Block (Cover Removed) (Typical)

Table 4 – Electrical Data, Standard Motors

UNIT	V–PH–Hz†	VOLTAGE LIMITS	FAN MOTOR		POWER SUPPLY	
			Hp (kW)	FLA	Minimum Circuit Amps	MOCP
40RUA*07 40RUQ*07	208/230–1–60	187–253	1.3 (0.97)	7.6	9.5	15
	208/230–3–60	187–253	2.4 (1.79)	5.8	7.3	15
	460–3–60	414–506	2.4 (1.79)	2.6	3.3	15
	575–3–60	518–632	1.0 (0.75)	1.4	1.7	15
40RUA*08 40RUQ*08 40RUS*08	208/230–1–60	187–253	2.4 (1.79)	11.0	13.8	20
	208/230–3–60	187–253	2.4 (1.79)	5.8	7.3	15
	460–3–60	414–506	2.4 (1.79)	2.6	3.3	15
	575–3–60	518–632	2.0 (1.49)	2.4	8.0	15
40RUA*12 40RUQ*12 40RUS*12	208/230–3–60	187–253	2.4 (1.79)	5.8	7.5	15
	460–3–60	414–506	2.4 (1.79)	2.6	3.3	15
	575–3–60	518–632	2.0 (1.49)	2.4	3.0	15
40RUA*14 40RUS*14	208/230–3–60	187–253	2.4 (1.79)	5.8	7.5	15
	460–3–60	414–506	2.4 (1.79)	2.6	3.3	15
	575–3–60	518–632	3.0 (2.24)	3.8	4.8	15
40RUA*16 40RUQ*16 40RUS*16	208/230–3–60	187–253	3.7 (2.76)	10.6	13.3	20
	460–3–60	414–506	3.7 (2.76)	4.6	6.0	15
	575–3–60	518–632	3.0 (2.24)	3.8	4.8	15

See Legend and Notes on page 21.

Table 5 – Electrical Data, Alternate Motors

UNIT	V–PH–Hz†	VOLTAGE LIMITS	FAN MOTOR		POWER SUPPLY	
			Hp (kW)	FLA	Minimum Circuit Amps	MOCP
40RUA*07 40RUQ*07	208/230–1–60	187–253	2.4 (1.79)	11.0/11.0	13.8/13.8	20
	208/230–3–60	187–253	2.9 (2.16)	7.5	9.4	15
	460–3–60	414–506	2.9 (2.16)	3.4	4.3	15
	575–3–60	518–632	2.0 (1.49)	2.4	3.0	15
40RUA*08 40RUQ*08 40RUS*08	208/230–1–60	187–253	2.4 (1.79)	11.0	13.8	15
	208/230–3–60	187–253	2.9 (2.16)	7.5/7.5	9.4/9.4	15
	460–3–60	414–506	2.9 (2.16)	3.4	4.3	15
	575–3–60	518–632	3.0 (2.24)	3.8	4.8	15
40RUA*12 40RUQ*12 40RUS*12	208/230–3–60	187–253	3.7 (2.76)	10.5/10.5	13.3/13.3	20
	460–3–60	414–506	3.7 (2.76)	4.8	6.0	15
	575–3–60	518–632	3.0 (2.24)	3.8	4.8	15
40RUA*14 40RUS*14	208/230–3–60	187–253	3.7 (2.76)	10.2	12.7	20
	460–3–60	414–506	3.7 (2.76)	4.8	6.0	15
	575–3–60	518–632	5.0 (3.73)	5.1	6.4	15
40RUA*16 40RUQ*16 40RUS*16	208/230–3–60	187–253	5.0 (3.73)	14.7/13.6	18.4/17.0	30/25
	460–3–60	414–506	5.0 (3.73)	6.8	8.5	15
	575–3–60	518–632	5.0 (3.73)	5.1	6.4	15

See Legend and Notes on page 21.

Table 6 – Fan Contactor Coil Data

UNIT 40RU*	VOLTAGE (vac)	MAXIMUM HOLDING VA
07, 08, 12, 14, 16	24	10

Legend and Notes for Tables 4 and 5

LEGEND:

FLA – Full Load Amps

MOCP – Maximum Overcurrent Protection

† Motors are designed for satisfactory operation within 10% of normal voltage shown. Voltages should not exceed the limits shown in the Voltage Limits column.

NOTES:

1. Minimum circuit amps (MCA) and MOCP values are calculated in accordance with The NEC. Article 440.
2. Motor FLA values are established in accordance with Underwriters' Laboratories (UL). Standard 1995.
3. **Unbalanced 3-Phase Supply Voltage**
   Never operate a motor where a phase imbalance in supply voltage is greater than 2%. Use the formula in the example (see column to the right) to determine the percentage of voltage imbalance.
4. Installation with Accessory Electric Heaters
   Size the Field Power Wiring between the heater TB1 and the 40RU indoor fan motor per NEC Article 430–28 (1) or (2) (depends on length of conduit between heater enclosure and 40RU power entry location). Install wires in field–installed conduit.

Example: Supply voltage is 230-3-60

$$\text{\% Voltage Imbalance} = 100 \times \frac{\text{max voltage deviation from average voltage}}{\text{average voltage}}$$

AB = 393 v
BC = 403 v
AC = 396 v

$$\text{Average Voltage} = \frac{(393 + 403 + 396)}{3} = \frac{1192}{3}$$

$$= 397$$

Determine maximum deviation from average voltage.
(AB) 397 – 393 = 4 v
(BC) 403 – 397 = 6 v
(AC) 397 – 396 = 1 v
Maximum deviation is 4 v.
Determine percent of voltage imbalance.

$$\text{\% Voltage Imbalance} = 100 \times \frac{6}{397}$$

$$= 1.5\%$$

This amount of phase imbalance is satisfactory as it is below the maximum allowable 2%.

IMPORTANT: If the supply voltage phase imbalance is more than 2%, contact your local electric utility company immediately.

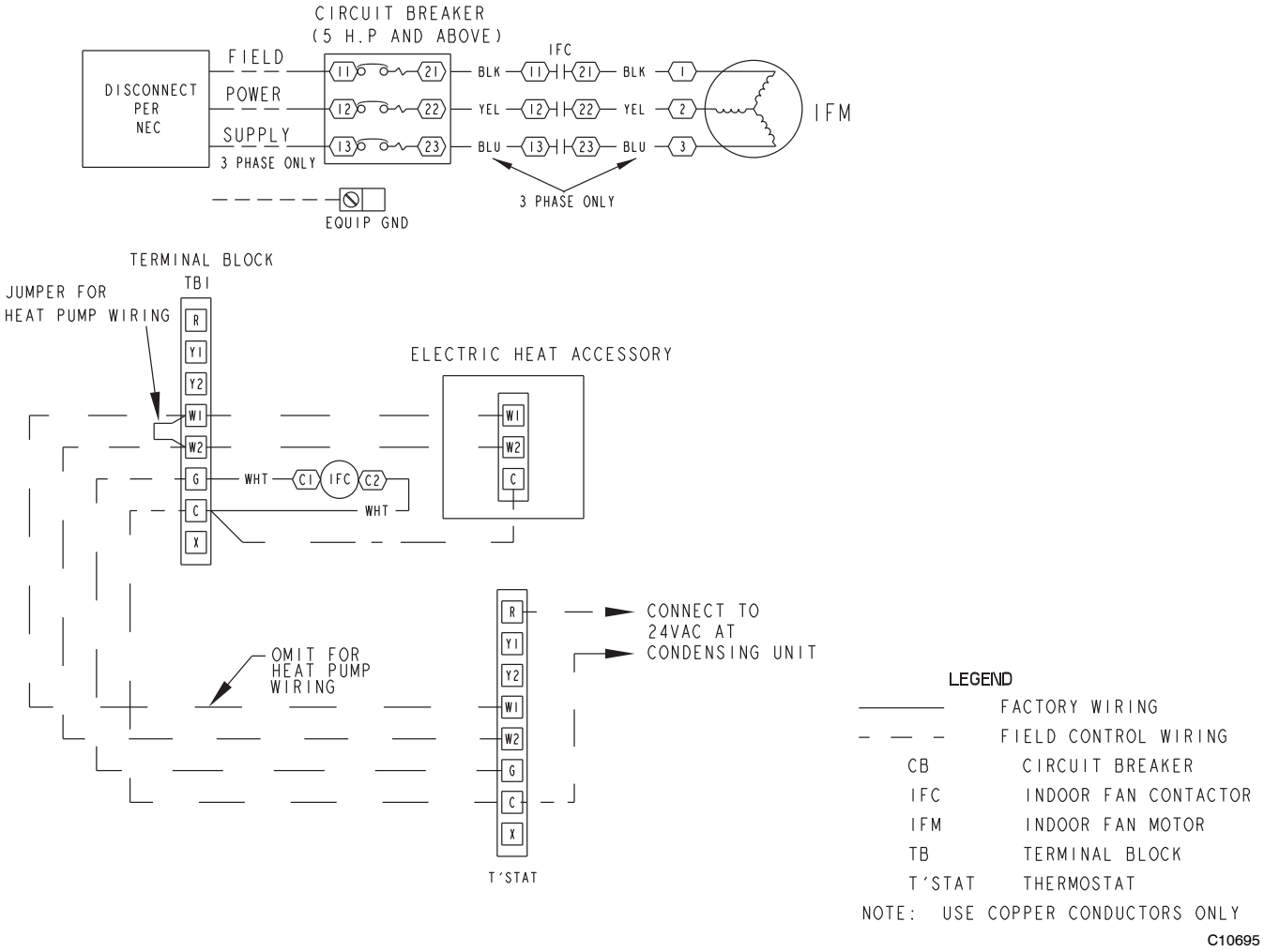

Fig. 18 - Unit Wiring

Connecting Ductwork - Refer to the Carrier System Design Manual for the recommended design and layout of ductwork. Fig. 19 shows recommended duct connection to units with 2 fans.

⚠ CAUTION

UNIT OPERATION HAZARD

Failure to follow this caution could cause equipment damage.

Do not operate unit without ductwork or discharge plenum unless fan speed has been adjusted for external static pressure of zero in. wg. Failure to do so may result in motor overload.

DISCHARGE CONNECTIONS — Duct flanges are factory-supplied; they are shipped inside the unit attached to the hairpin end of the coil tube sheet for field installation. Using the existing screws, install the duct flanges on the unit's fan deck. Each fan discharge requires 2 flanges; each flange must be bent in the middle to conform to the discharge opening. See Fig. 20. After flanges are installed, connect them to the supply duct using a canvas connection to prevent vibration. It is important that this connection be properly fabricated to prevent high air friction losses and air noise.

RETURN CONNECTIONS — When using return-air ductwork, route return-air duct to the unit's return air inlet near the filter rack, using a canvas connection to prevent transmission of unit vibration. If the duct blocks off the unit's access panel, provide a slip joint in the ductwork to permit removal for servicing.

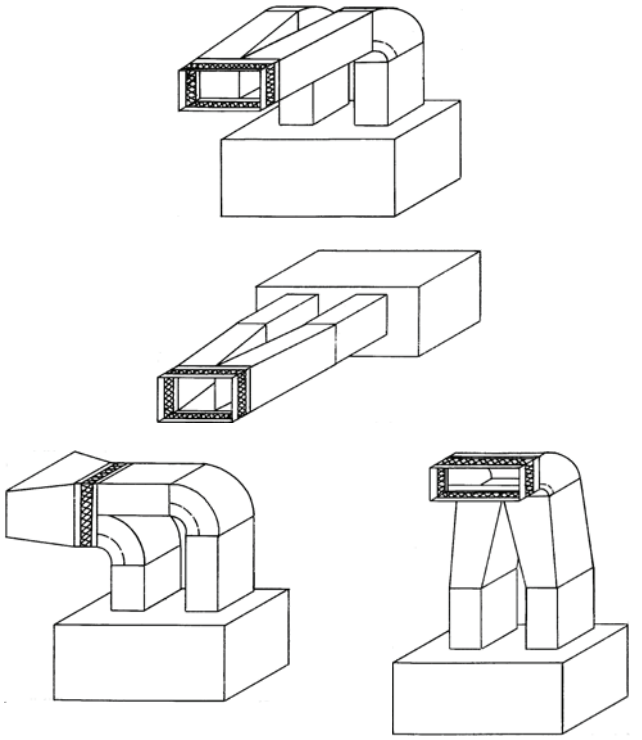

C10696

Fig. 19 - Typical Fan Discharge Connections for Multiple Fan Units

OUTDOOR-AIR INLET CONNECTIONS — Connect outdoor-air inlet to field-installed accessory economizer. Refer to Economizer Installation Instructions.

Return-Air Filters - Type and size of filters are shown in Tables 1A – 1F and are factory-supplied and factory-installed. In all units with 2 fans, a filter replacement tool (hook) is shipped inside the unit for field use when replacing filters. See the Service section for instructions on filter element replacement.

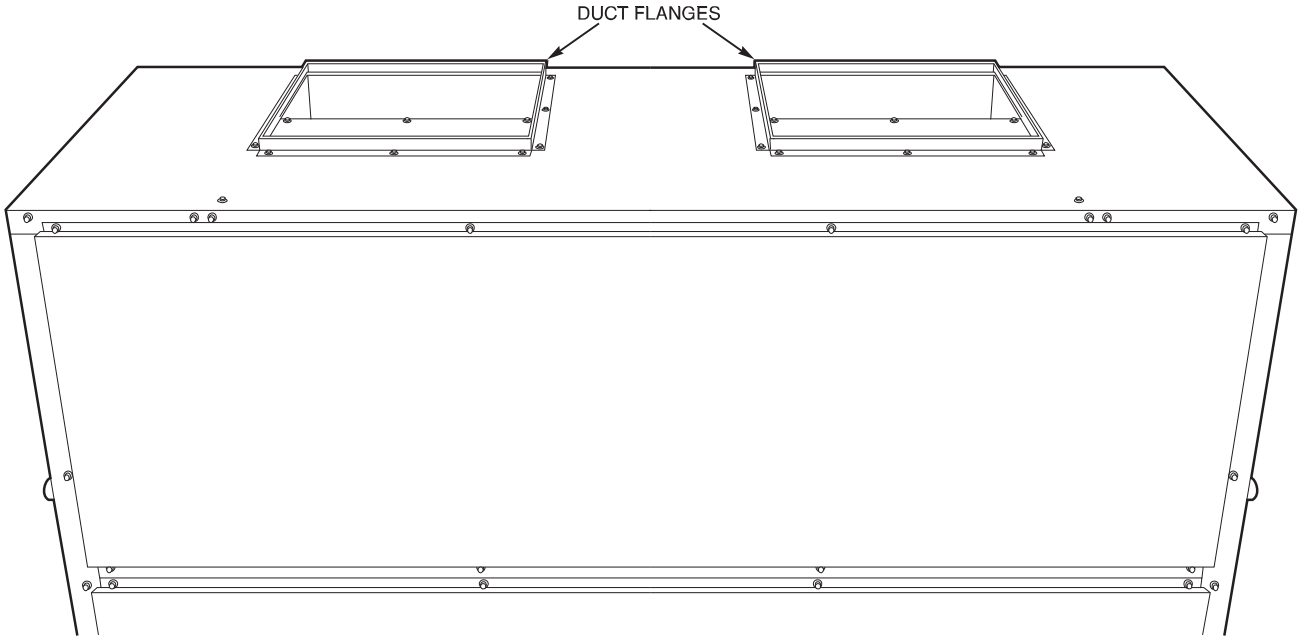

C10697

Fig. 20 - Duct Flange Installation

START-UP

Before starting unit, check the following and correct as necessary:

- Is unit solidly supported?
- Is fan adjusted for speed and pulley alignment?
- Are pulleys, motor, and bearings securely mounted?
- Are there any loose parts that will rattle or vibrate?
- Is condensate drain pan pitched for correct drainage?
- Are coil baffle plates tight against coil to prevent air bypass?
- Are all panels securely fastened?
- Are all electrical connections correct and tight?

40RUA and 40RUQ ONLY —

- Is TXV bulb located on suction tube per Fig. 21?
- Is the capillary tube to the bulb free of kinks and not subject to pinching?
- Is the bulb well secured to the suction tube with strap?

Also refer to condensing unit or outdoor heat pump section instructions before starting a split system. A split system start-up checklist is provided at the end of these instructions.

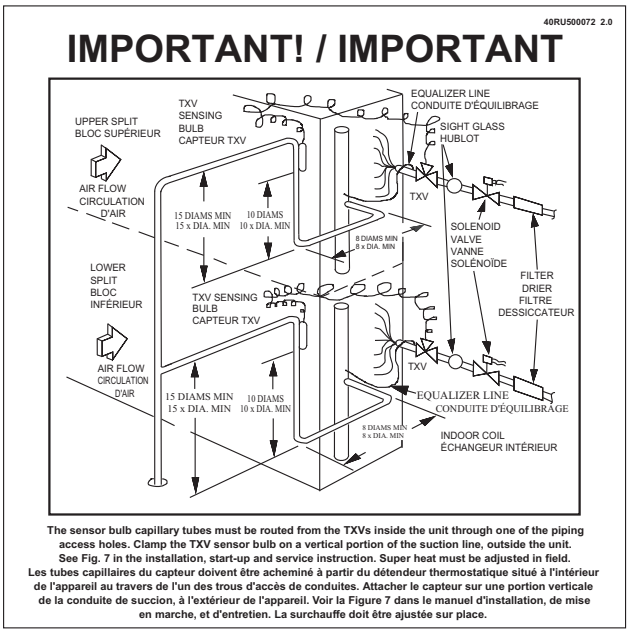

C10827

Fig. 21 - Label, TXV Bulb Location

Adjusting TXV for Superheat (40RUA and RUQ only) —

The unit-mounted thermostatic expansion valve(s) is/are factory set to provided superheat at the bulb location in 10°F to 15°F (5.5°C to 8.3°C) range. Actual system load conditions may require adjustment of the factory setting. To adjust the TXV superheat setting:

1. Remove the seal cap from the bottom of the TXV body.
2. To increase superheat, turn the stem clockwise. To decrease the superheat, turn the stem counterclockwise. Do not turn the stem more than one full turn.
3. Wait until suction pressure and superheat stabilize. This may take more than 30 minutes.
4. Continue adjustment until superheat reaches 10°F to 15°F (5.5°C to 8.3°C).
5. Replace the seal cap; tighten.

⚠ INSTALLER / INSTALLATEUR

TXV superheat must be checked at initial unit start-up and adjusted if necessary. Superheat must be 10 - 15 deg F.

La surchauffe TXV doit être vérifiée au moment de la mise en route initiale et ajustée si nécessaire. La surchauffe doit être comprise entre 10 et 15 degrés F.

40RU500073 2.0

C10828

Fig. 22 - Label, TXV Adjustment

SERVICE

Inspection and maintenance should be performed at regular intervals and should include the following:

- Complete cleaning of cabinet, fan wheel, cooling coil, condensate pan and drain, heating coils, and return-air grille (if present).
- Inspection of panels and sealing of unit against air leakage.
- Adjustment of fan motor, belt, bearings, and wheels.
- Cleaning or replacement of filters.
- Testing for cooling/heating system leaks.
- Checking of all electrical connections.

⚠ WARNING

ELECTRICAL SHOCK HAZARD

Failure to follow this warning could result in personal injury or death.

Before performing service or maintenance operations on unit, always turn off main power switch to unit and install lockout tag. Unit may have more than one power switch.

Most unit service can be performed by removing one or both of the unit's side panels. Coil cleaning or removal or insulation cleaning may require removal of a rear, top, or bottom panel, depending on the unit's orientation. When service is completed, replace unit panels.

Panels - Panels are fastened to unit frame with sheet metal screws. Fan and coil compartment must be sealed tightly after service to prevent air from bypassing the cooling coil.

Fan Motor Lubrication - Fan motor supplied with unit is permanently lubricated and requires no further lubrication.

Fan Shaft Bearings - Bearings on size 07-12 units are sealed, permanently lubricated bearings that require no further lubrication. Size 14-16 units have pillow-block bearings (Fig. 23) that must be lubricated with suitable bearing grease approximately every 3 months. See Table 7 for suitable lubricants.

Table 7 – Lubricant Data

MANUFACTURER	LUBRICANT
Mobil	Mobilplex EP No. 2
Sunoco	Prestige 42
Texaco	Multifak 2
Texaco	Regal AFB–2*

*Preferred lubricant, contains rust and oxidation inhibitors.

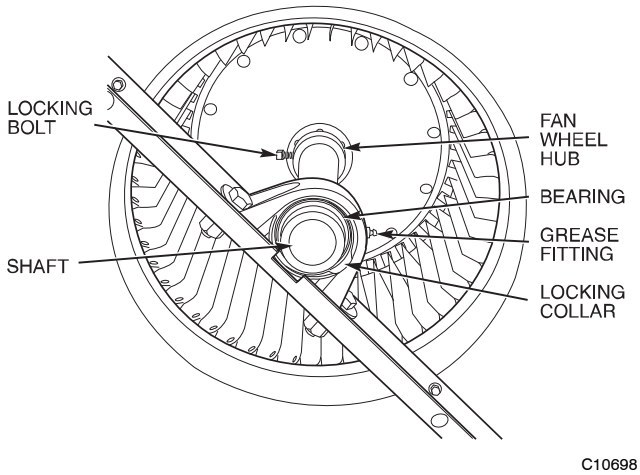

Fig. 23 - Fan Shaft, Bearings, and Fan Wheel (Typical)

Centering Fan Wheel - If fan and fan shaft assembly are not properly centered, blades may scrape against the blower side scroll plate or may create an objectionable whistling noise. It may be necessary to adjust individual fan wheels or move entire fan shaft. See the following two sections.

Fan Shaft Position Adjustment - Loosen setscrew or locking collar of each fan shaft bearing. Slide shaft into correct position and replace locking collar (Fig. 24). To replace locking collar, push collar up against inner face of bearing. Turn collar in direction of fan rotation until tight, and tighten setscrew. Tightening locking collar in direction of fan rotation results in further tightening of collar should setscrew work itself loose.

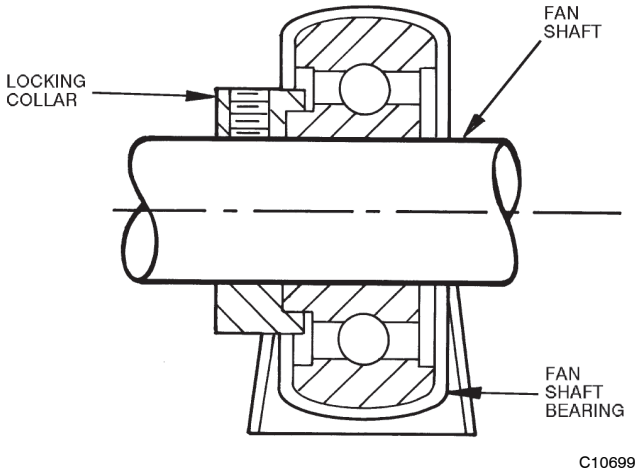

Fig. 24 - Fan Shaft Bearing

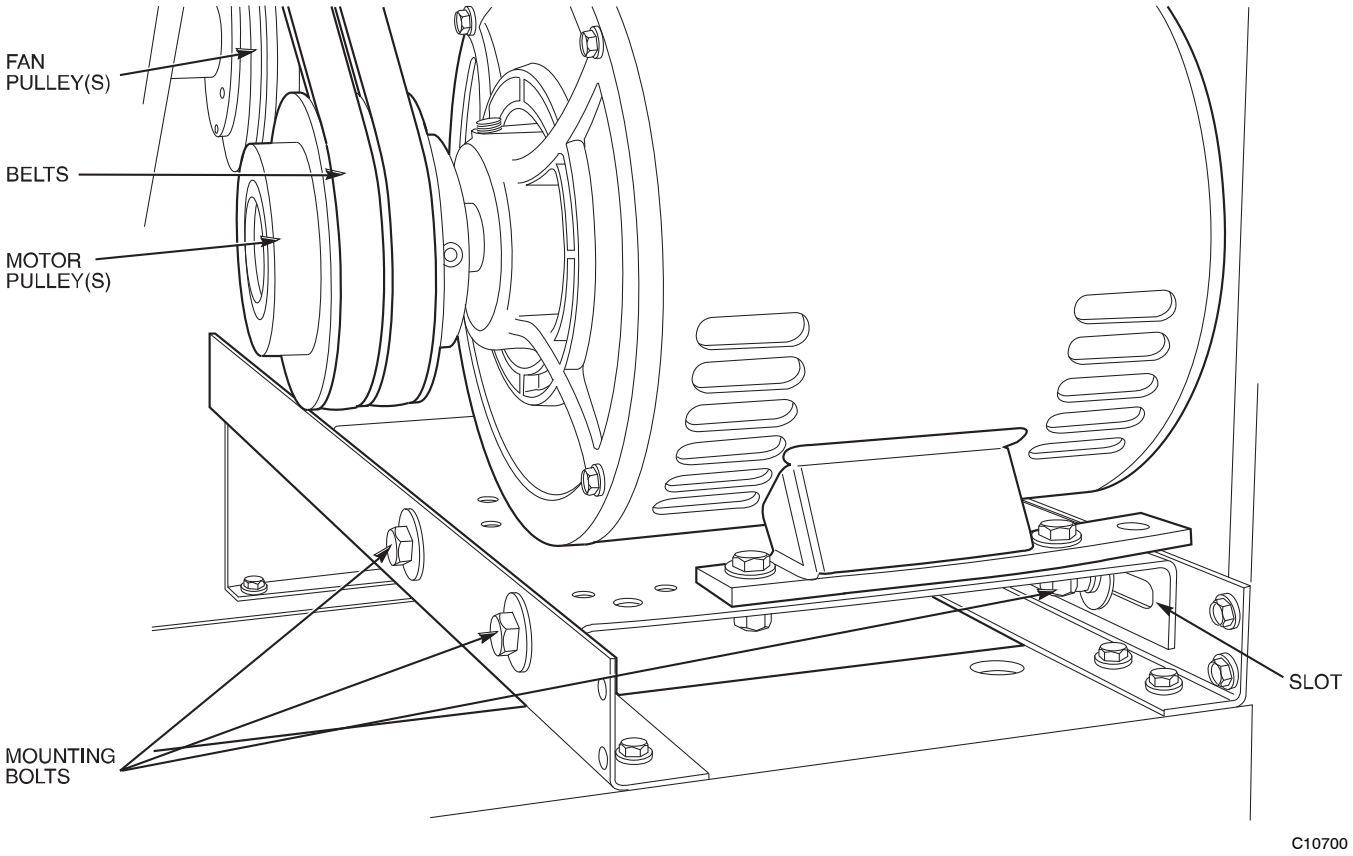

Fig. 25 - Fan Motor Mounting

Individual Fan Wheel Adjustment - Loosen the 2 locking bolts holding fan wheel hub to shaft. See Fig. 23. Position fan wheel in center of the fan housing and tighten locking bolts. Clearance between wheel and housing should be the same on both sides.

Fan Belts - Motor mounting plate and motor support angles are slotted to permit both vertical and horizontal adjustment. Adjust belt(s) for correct deflection by loosening motor plate mounting bolts, moving motor/plate assembly forward or back, and re tightening bolts. Press down on belt with one finger midway between fan and motor pulleys to check deflection. For units with motor sizes up to and including 3.7 Hp (2.76 kW), correct deflection is $^{3}/_{16}$-in. (4.8 mm). For larger motor sizes, correct deflection is $^{1}/_{8}$-in. (3.2 mm). See Fig. 25.

If complete belt replacement is required during servicing, loosen the motor plate mounting bolts (Fig. 25), move motor/plate assembly towards fan pulley, and pull belt(s) off pulleys. Reverse the procedure with new bolts and readjust deflection.

Fan Rotation - Correct fan rotation with respect to fan outlet is shown in Fig. 26.

To reverse the direction of rotation of a 3-phase fan motor, reverse any 2 of the power leads. Refer to the connection diagram on the inside of motor terminal box cover for proper reversing procedure of single-phase motor.

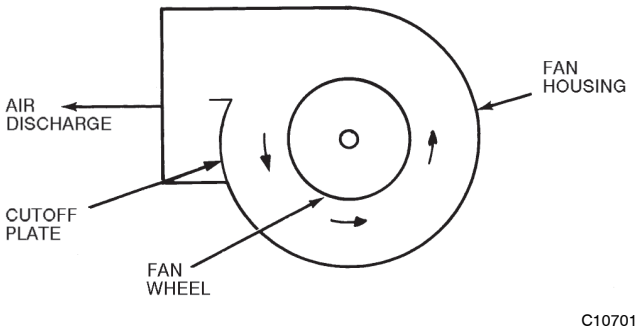

Fig. 26 - Fan Rotation

Fan Pulley Alignment - Align as follows:

1. Loosen setscrews on pulleys.
2. Align pulleys visually and tighten setscrews on fan pulley to lock it in place.
3. Use the methods shown in Fig. 27 to check proper pulley alignment.

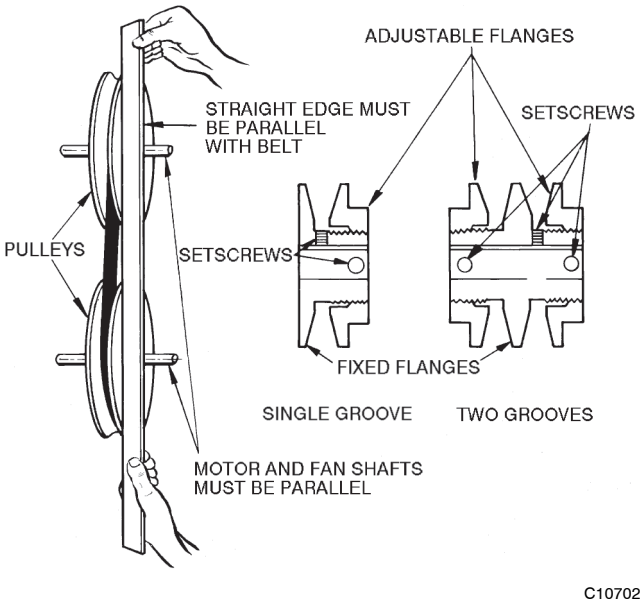

Fig. 27 - Fan Pulley Adjustments

4. If pulleys are not in correct alignment, loosen the motor holddown bolts and slide the motor axially until the pulleys are aligned.
5. Tighten motor holddown bolts.

Pulley and Drive Adjustment - To obtain desired fan speed, refer to the fan motor and drive data in Tables 8A-11D and adjust fan motor pulley as follows:

1. Remove belt from fan motor pulley after loosening motor from motor base.
2. Loosen setscrew in moveable flange of pulley. Screw moveable flange toward fixed flange to increase the fan speed and away from fixed flange to reduce speed. Before tightening setscrew, make certain that setscrew is over nearest flat surface of pulley hub (Fig. 27).

⚠ CAUTION

UNIT OPERATION HAZARD

Failure to follow this caution could cause equipment damage.

Increasing fan speed produces a greater load on motor. Do not exceed rated capacity of motor.

Condensate Drains - Keep condensate drains free of dirt and foreign matter.

Return-Air Filters - Refer to Replacing Filters section for filter accessibility and removal. Replace with clean filters of the sizes listed in Tables 1A-1F.

Chilled Water Coil Freeze Protection - Shut off water supply to unit. Remove side panel of unit and remove vent and drain plugs in top and bottom of coil header. Drain coil and blow out remaining water. Reinstall plugs and side panel.

Alternative freeze protection methods follow:

- Circulate hot water within the water coil's supply main or supplementary space heating.
- Close off supply lines to unit and open a union or field-supplied drain valve in the return line.

IMPORTANT: Draining from return line will not completely drain water from coils.

- After draining as much water as possible from coils, add sufficient antifreeze to prevent residual water in the coil from freezing.
- Add a sufficient quantity of non-corrosive antifreeze to the entire system to prevent all water within the system from freezing.

Coil Removal - Remove unit panels and corner posts as required. Disconnect coil connections and remove fastening screws. Remove coil through end or side sections of unit.

Cleaning Cooling Coil - Remove return-air filters. Remove any heavy dirt that may have accumulated on underside of coil. Coil can be cleaned more easily with a stiff brush, vacuum cleaner, or compressed air when coil is dry. If coil is wet or if water is to be used for cleaning, guard against splashing water on electrical components or damaging surrounding area. Clean coil baffles as applicable and check for tight fit to be sure air does not bypass coil.

Cleaning Insulation - The insulation contains an immobilized antimicrobial agent that helps prevent the growth of bacteria and fungi. Clean the inner surface of the insulation according to the separate maintenance instructions shipped with the unit.

Replacing Filters - Filters can be removed and installed from either side of the unit. Install new filters in units that have one fan as follows:

1. Remove the side access panel (retain screws).
2. Remove the filter retainer clip (see Fig. 28).
3. Remove old filters by lifting and tilting them out of the filter track. See Fig. 16 and 29.
4. Reverse the procedure to install new filters.

To install new filters in larger units that have 2 fans, follow the preceding steps, but use the factory-supplied filter hook to slide filters within reach for removal. The filter hook is shipped inside the unit in the filter track.

⚠ CAUTION

UNIT OPERATION HAZARD

Failure to follow this caution could cause equipment damage.

Do not operate unit without air filters.

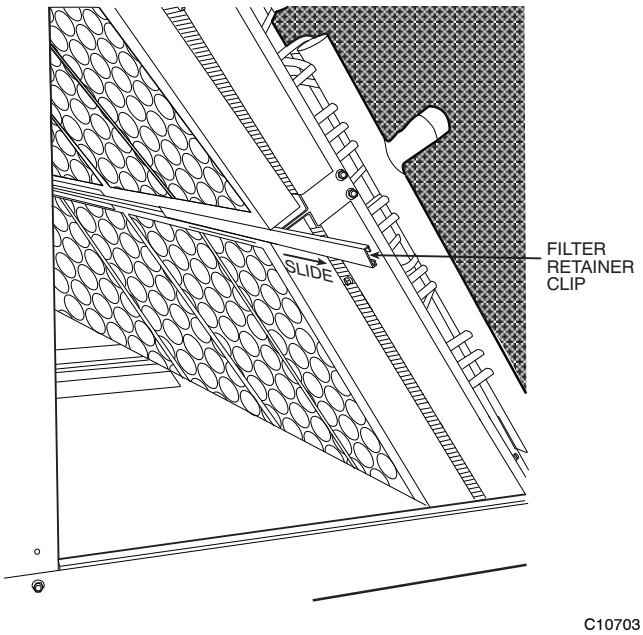

Fig. 28 - Remove Filter Retainer Clip

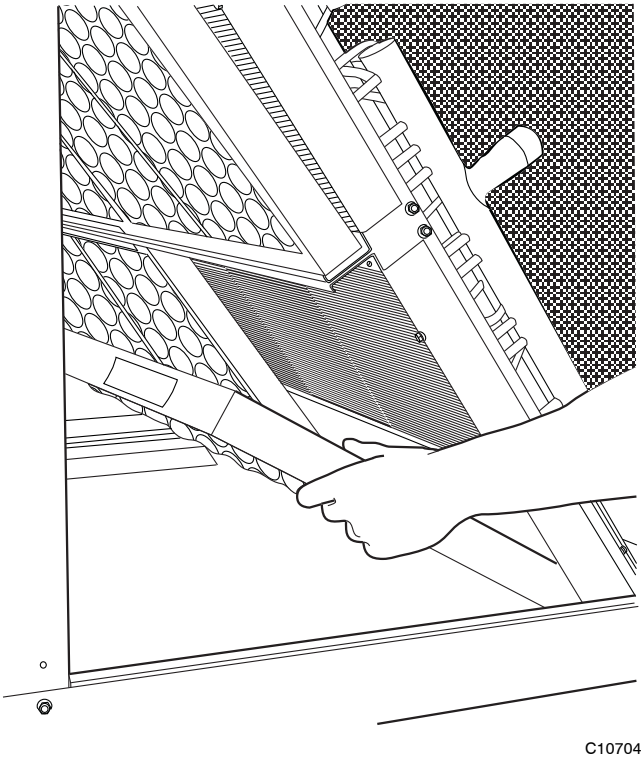

Fig. 29 - Filter Removal/Replacement

Table 8A - Fan Motor Data, Standard Motor — English

UNIT	40RUA*07 40RUQ*07	40RUA*08 40RUQ*08 40RUS*08	40RUA*12 40RUQ*12 40RUS*12	40RUA*14 40RUS*14	40RUA*16 40RUQ*16 40RUS*16
208/230–1–60					
Speed (rpm)	1725	1725	—	—	—
Hp	1.3	2.4	—	—	—
Frame (NEMA)	56Y	56Y	—	—	—
Shaft Dia (in.)	5/8	5/8	—	—	—
208/230–3–60 and 460–3–60					
Speed (rpm)	1725	1725	1725	1725	1725
Hp	2.4	2.4	2.4	2.9	3.7
Frame (NEMA)	56Y	56Y	56Y	56Y	56Y
Shaft Dia (in.)	5/8	5/8	5/8	7/8	7/8
575–3–60					
Speed (rpm)	1725	1725	1725	1725	1725
Hp	1.0	2.0	2.0	3.0	3.0
Frame (NEMA)	56	56HZ	56HZ	56HZ	56HZ
Shaft Dia (in.)	5/8	7/8	7/8	7/8	7/8

LEGEND
NEMA — National Electrical Manufacturers Association

Table 8B - Fan Motor Data, Alternate Motor — English

UNIT	40RUA*07 40RUQ*07	40RUA*08 40RUQ*08 40RUS*08	40RUA*12 40RUQ*12 40RUS*12	40RUA*14 40RUS*14	40RUA*16 40RUQ*16 40RUS*16
208/230–1–60					
Speed (rpm)	1725	1725	—	—	—
Hp	2.4	2.4	—	—	—
Frame (NEMA)	56Y	56Y	—	—	—
Shaft Dia (in.)	5/8	5/8	—	—	—
208/230–3–60 and 460–3–60					
Speed (rpm)	1725	1725	1725	1725	1725
Hp	2.9	2.9	3.7	3.7	5.0
Frame (NEMA)	56Y	56Y	Y56Y	Y56Y	S184T
Shaft Dia (in.)	7/8	7/8	7/8	7/8	1 1/8
575–3–60					
Speed (rpm)	1725	1725	1725	1745	1745
Hp	2.0	3.0	3.0	5.0	5.0
Frame (NEMA)	56HZ	56HZ	56HZ	184T	184T
Shaft Dia (in.)	7/8	7/8	7/8	1 1/8	1 1/8

LEGEND
NEMA — National Electrical Manufacturers Association

Table 8C - Fan Motor Data, Standard Motor — SI

UNIT	40RUA*07 40RUQ*07	40RUA*08 40RUQ*08 40RUS*08	40RUA*12 40RUQ*12 40RUS*12	40RUA*14 40RUS*14	40RUA*16 40RUQ*16 40RUS*16
208/230–1–60					
Speed (r/s)	28.75	28.75	—	—	—
Shaft kW	0.97	1.79	—	—	—
Frame (NEMA)	56Y	56Y	—	—	—
Shaft Dia (mm)	15.9	15.9	—	—	—
208/230–3–60 and 460–3–60					
Speed (r/s)	28.75	28.75	28.75	28.75	28.75
Shaft kW	1.79	1.79	1.79	2.16	2.76
Frame (NEMA)	56Y	56Y	56Y	56Y	56Y
Shaft Dia (mm)	15.9	15.9	15.9	22.2	22.2
575–3–60					
Speed (r/s)	28.75	28.75	28.75	28.75	28.75
Shaft kW	0.746	1.49	1.49	2.24	2.24
Frame (NEMA)	56	56HZ	56HZ	56HZ	56HZ
Shaft Dia (mm)	15.9	22.2	22.2	22.2	22.2

LEGEND
NEMA — National Electrical Manufacturers Association

Table 8D - Fan Motor Data, Alternate Motor — SI

UNIT	40RUA*07 40RUQ0*7	40RUA*08 40RUQ*08 40RUS*08	40RUA*12 40RUQ*12 40RUS*12	40RUA*14 40RUS*14	40RUA*16 40RUQ*16 40RUS*16
208/230–1–60					
Speed (r/s)	28.75	28.75	—	—	—
Shaft kW	1.79	1.79	—	—	—
Frame (NEMA)	56Y	56Y	—	—	—
Shaft Dia (mm)	15.9	15.9	—	—	—
208/230–3–60 and 460–3–60					
Speed (r/s)	28.75	28.75	28.75	28.75	29.08
Shaft kW	2.16	2.16	2.76	2.76	3.73
Frame (NEMA)	56Y	56Y	Y56Y	Y56Y	S184T
Shaft Dia (mm)	22.2	22.2	22.2	22.2	28.6
575–3–60					
Speed (r/s)	28.75	28.75	28.75	29.08	29.08
Shaft kW	1.49	2.24	2.24	3.73	3.73
Frame (NEMA)	56HZ	56HZ	56HZ	184T	184T
Shaft Dia (mm)	22.2	22.2	22.2	28.6	28.6

LEGEND
NEMA — National Electrical Manufacturers Association

Table 9A- Standard Drive Data, 60 Hz — English

UNIT	40RUA*07 40RUQ0*7	40RUA*08 40RUQ*08 40RUS*08	40RUA*12 40RUQ*12 40RUS*12	40RUA*14 40RUS*14	40RUA*16 40RUQ*16 40RUS*16
MOTOR DRIVE					
Motor Pulley Pitch Diameter (in.)	2.4–3.4	2.8–3.8	3.4–4.4	2.8–3.8	2.8–3.8
Pulley Factory Setting Full Turns Open	2.5	2.5	2.5	2.5	2.5
FAN DRIVE					
Pulley Pitch Dia (in.)	8.8	8.8	8.8	9.0	9.0
Pulley Bore (in.)	1	1	1	$1^{7}/_{16}$	$1^{7}/_{16}$
Belt No. — Section	1—A	1—A	1—A	1—A	1—A
Belt Pitch (in.)	40.3	41.3	42.3	42.3	42.3
FAN SPEEDS (rpm)					
Factory Setting	568	647	764	632	632
Range	470–666	549–745	666–863	537–728	537–728
Max Allowable Speed (rpm)	1200	1200	1200	1200	1200
Change per $^{1}/_{2}$ Turn of Moveable Motor Pulley Flange	19.6	19.6	19.7	19.1	19.1
MAX FULL TURNS FROM CLOSED POSITION	5	5	5	5	5
SHAFTS CENTER DISTANCE (in.)	10.44–12.32	10.44–12.32	10.44–12.32	10.44–12.32	10.44–12.32

Table 9B - Medium-Static Drive Data, 60 Hz — English

UNIT	40RUA*07 40RUQ*07	40RUA*08 40RUQ*08 40RUS*08	40RUA*12 40RUQ*12 40RUS*12	40RUA*14 40RUS*14	40RUA*16 40RUQ*16 40RUS*16
MOTOR DRIVE					
Motor Pulley Pitch Diameter (in.)	3.4–4.4	3.4–4.4	3.4–4.4	3.4–4.4	3.7–4.7
Pulley Factory Setting Full Turns Open	2.5	2.5	2.5	2.5	3.0
FAN DRIVE					
Pulley Pitch Dia (in.)	8.8	8.0	8.0	8.2	8.6
Pulley Bore (in.)	1	1	1	$1^{7}/_{16}$	$1^{7}/_{16}$
Belt No. — Section	1—A	1—A	1—A	1—A	1—B
Belt Pitch (in.)	42.3	40.3	40.3	41.3	41.8
FAN SPEEDS (rpm)					
Factory Setting	764	841	841	820	842
Range	666–863	733–949	733–949	715–926	742–943
Max Allowable Speed (rpm)	1200	1200	1200	1200	1200
Change per $^{1}/_{2}$ Turn of Moveable Motor Pulley Flange	19.7	21.6	21.6	21.1	16.7
MAX FULL TURNS FROM CLOSED POSITION	5	5	5	5	6
SHAFTS CENTER DISTANCE (in.)	10.44–12.32	10.44–12.32	10.44–12.32	10.44–12.32	10.44–12.32

Table 9C - High-Static Drive Data, 60 Hz — English

UNIT	40RUA*07 40RUQ*07	40RUA*08 40RUQ*08 40RUS*08	40RUA*12 40RUQ*12 40RUS*12	40RUA*14 40RUS*14	40RUA*16 40RUQ*16 40RUS*16
MOTOR DRIVE					
Motor Pulley Pitch Diameter (in.)	3.4–4.4	3.4–4.4	3.4–4.4	3.7–4.7	4.3–5.3
Pulley Factory Setting Full Turns Open	2.5	2.5	2.5	3.0	3.0
FAN DRIVE					
Pulley Pitch Dia (in.)	7.0	6.0*	6.0	7.4	7.9
Pulley Bore (in.)	1	1	1	$1^{7}/_{16}$	$1^{7}/_{16}$
Belt No. — Section	1—A	1—A	1—A	1—B	1—B
Belt Pitch (in.)	41.3	37.3	37.3	39.8	39.8
FAN SPEEDS (rpm)					
Factory Setting	961	1121	1121	979	1060
Range	838–1084	978–1200*†	978–1200†	873–1096	950–1171
Max Allowable Speed (rpm)	1200	1200	1200	1200	1200
Change per $^{1}/_{2}$ Turn of Moveable Motor Pulley Flange	24.6	28.7	28.7	19.4	18.4
MAX FULL TURNS FROM CLOSED POSITION	5	5	5	6	6
SHAFTS CENTER DISTANCE (in.)	10.44–12.32	10.44–12.32	10.44–12.32	10.44–12.32**	9.16–10.99

* Values for 3–phase motor shown. For single–phase motor, pulley pitch diameter is 7 in. And resulting fan speed is 837–1096 rpm.

† It is possible to adjust drive so that fan speed exceeds maximum allowable. DO NOT exceed 1200 rpm.

** 575–v unit has a center distance of 9.16–10.99.

Table 9D - Standard Drive Data, 60 Hz — SI

UNIT	40RUA*07 40RUQ*07	40RUA*08 40RUQ*08 40RUS*08	40RUA*12 40RUQ*12 40RUS*12	40RUA*14 40RUS*14	40RUA*16 40RUQ*16 40RUS*16
MOTOR DRIVE					
Motor Pulley Pitch Diameter (mm)	61.0–86.4	71.1–96.5	86.4–111.8	71.1–96.5	71.1–96.5
Pulley Factory Setting Full Turns Open	2.5	2.5	2.5	2.5	2.5
FAN DRIVE					
Pulley Pitch Dia (mm)	224	224	224	229	229
Pulley Bore (mm)	25.4	25.4	25.4	36.5	36.5
Belt No. — Section	1—A	1—A	1—A	1—A	1—A
Belt Pitch (mm)	1024	1049	1074	1074	1074
FAN SPEEDS (r/s)					
Factory Setting	9.5	10.8	12.7	10.5	10.5
Range	7.8–11.1	9.2–12.4	11.1–14.4	9.0–12.1	9.0–12.1
Max Allowable Speed (r/s)	20.0	20.0	20.0	20.0	20.0
Change per $^{1}/_{2}$ Turn of Moveable Motor Pulley Flange	0.327	0.327	0.328	0.318	0.318
MAX FULL TURNS FROM CLOSED POSITION	5	5	5	5	5
SHAFTS CENTER DISTANCE (mm)	265–313	265–313	265–313	265–313	265–313

Table 9E - Medium-Static Drive Data, 60 Hz — SI

UNIT	40RUA*07 40RUQ*07	40RUA*08 40RUQ*08 40RUS*08	40RUA*12 40RUQ*12 40RUS*12	40RUA*14 40RUS*14	40RUA*16 40RUQ*16 40RUS*16
MOTOR DRIVE					
Motor Pulley Pitch Diameter (mm)	86.4–111.8	86.4–111.8	86.4–111.8	86.4–111.8	94.0–119.4
Pulley Factory Setting Full Turns Open	2.5	2.5	2.5	2.5	3.0
FAN DRIVE					
Pulley Pitch Dia (mm)	224	203	203	208	218
Pulley Bore (mm)	25.4	25.4	25.4	36.5	36.5
Belt No. — Section	1—A	1—A	1—A	1—A	1—B
Belt Pitch (mm)	1074	1024	1024	1049	1062
FAN SPEEDS (r/s)					
Factory Setting	12.7	14.0	14.0	13.7	14.0
Range	11.1–14.4	12.2–15.8	12.2–15.8	11.9–15.4	12.4–15.7
Max Allowable Speed (r/s)	20.0	20.0	20.0	20.0	20.0
Change per $^1/_2$ Turn of Moveable Motor Pulley Flange	0.328	0.360	0.360	0.352	0.278
MAX FULL TURNS FROM CLOSED POSITION	5	5	5	5	6
SHAFTS CENTER DISTANCE (mm)	265–313	265–313	265–313	265–313	265–313

Table 9F - High-Static Drive Data, 60 Hz — SI

UNIT	40RUA*07 40RUQ*07	40RUA*08 40RUQ*08 40RUS*08	40RUA*12 40RUQ*12 40RUS*12	40RUA*14 40RUS*14	40RUA*16 40RUQ*16 40RUS*16
MOTOR DRIVE					
Motor Pulley Pitch Diameter (mm)	86.4–111.8	86.4–111.8	86.4–111.8	94.0–119.4	109.2–134.6
Pulley Factory Setting Full Turns Open	2.5	2.5	2.5	3.0	3.0
FAN DRIVE					
Pulley Pitch Dia (mm)	178	152*	152	188	201
Pulley Bore (mm)	25.4	25.4	25.4	36.5	36.5
Belt No. — Section	1—A	1—A	1—A	1—B	1—B
Belt Pitch (mm)	1049	947	947	1011	1011
FAN SPEEDS (r/s)					
Factory Setting	16.0	18.7	18.7	16.3	17.7
Range	14.0–18.1	16.3–20.0*†	16.3–20.0†	14.4–18.3	15.8–19.5
Max Allowable Speed (r/s)	20.0	20.0	20.0	20.0	20.0
Change per $^1/_2$ Turn of Moveable Motor Pulley Flange	0.410	0.478	0.478	0.323	0.307
MAX FULL TURNS FROM CLOSED POSITION	5	5	5	6	6
SHAFTS CENTER DISTANCE (mm)	265–313	265–313	265–313	265–313**	232–279

* Values for 3–phase motor shown. For single–phase motor, pulley pitch diameter is 178 mm and resulting fan speed is 14.0–18.3 r/s.

† It is possible to adjust drive so that fan speed exceeds maximum allowable. DO NOT exceed 20 r/s.

** 575–v unit has a center distance of 233–279.

Table 10A - 40RU Standard Fan Performance Data — 0.0-2.4 in. wg External Static Pressure — English

UNIT	AIRFLOW (Cfm)	EXTERNAL STATIC PRESSURE (in. wg)													
		0.0		0.2		0.4		0.6		0.8		1.0		1.2	
		Rpm	Bhp	Rpm	Bhp	Rpm	Bhp	Rpm	Bhp	Rpm	Bhp	Rpm	Bhp	Rpm	Bhp
40RUA*07 40RUQ*07	1,800	399	0.19	454	0.24	548	0.35	634	0.47	713	0.60	785	0.74	850	0.89
	2,100	446	0.28	497	0.34	583	0.46	660	0.59	733	0.73	802	0.88	867	1.05
	2,400	498	0.40	541	0.47	622	0.60	693	0.74	760	0.89	824	1.05	885	1.22
	2,700	544	0.55	588	0.63	663	0.78	730	0.93	792	1.09	851	1.26	909	1.44
	3,000	594	0.73	635	0.82	707	0.99	770	1.15	828	1.32	883	1.50	937	1.69
40RUA*08 40RUQ*08 40RUS*08	2,250	273	0.08	493	0.37	580	0.49	656	0.62	727	0.76	794	0.92	858	1.08
	2,600	322	0.15	540	0.52	622	0.66	693	0.81	757	0.96	819	1.12	878	1.29
	3,000	552	0.65	595	0.73	673	0.91	740	1.07	800	1.24	856	1.41	910	1.60
	3,400	615	0.91	653	1.01	726	1.21	789	1.40	846	1.59	899	1.78	950	1.97
	3,750	671	1.20	706	1.31	773	1.53	834	1.74	889	1.95	940	2.16	988	2.37
40RUA*12 40RUQ*12 40RUS*12	3,000	399	0.29	573	0.69	654	0.86	722	1.03	784	1.19	841	1.37	896	1.55
	3,500	604	0.92	641	1.02	714	1.22	780	1.42	838	1.61	892	1.81	942	2.01
	4,000	680	1.33	713	1.45	778	1.68	839	1.91	896	2.14	947	2.36	995	2.58
	4,500	756	1.86	787	1.99	845	2.26	901	2.52	955	2.78	1005	3.03	1051	3.28
	5,000	834	2.51	861	2.67	914	2.96	966	3.25	1016	3.54	1064	3.82	1109	4.11
40RUA*14 40RUS*14	3,750	394	0.40	453	0.52	558	0.80	643	1.10	717	1.39	785	1.71	848	2.04
	4,300	436	0.57	487	0.70	586	1.00	670	1.34	742	1.67	806	2.01	867	2.36
	5,000	492	0.86	535	0.99	623	1.31	704	1.69	775	2.08	838	2.47	896	2.86
	5,700	550	1.23	587	1.37	664	1.71	740	2.11	809	2.55	872	2.99	929	3.43
	6,250	596	1.59	630	1.74	700	2.09	770	2.51	837	2.97	899	3.45	955	3.94
40RUA*16 40RUQ*16 40RUS*16	4,500	428	0.59	475	0.70	570	0.99	656	1.33	730	1.68	796	2.02	856	2.38
	5,300	488	0.92	528	1.04	609	1.34	689	1.71	762	2.11	827	2.51	886	2.92
	6,000	542	1.29	578	1.43	649	1.74	721	2.11	791	2.55	855	3.00	914	3.46
	6,800	604	1.83	637	1.99	700	2.32	763	2.70	826	3.15	888	3.64	946	4.15
	7,500	660	2.42	690	2.59	747	2.95	804	3.34	861	3.79	919	4.29	975	4.83

See Legend and Notes on page 36.

Table 10A- 40RU Standard Fan Performance Data — 0.0-2.4 in. wg External Static Pressure — English (cont)

UNIT	AIRFLOW (Cfm)	EXTERNAL STATIC PRESSURE (in. wg)											
		1.4		1.6		1.8		2.0		2.2		2.4	
		Rpm	Bhp	Rpm	Bhp	Rpm	Bhp	Rpm	Bhp	Rpm	Bhp	Rpm	Bhp
40RUA*07 40RUQ*07	1,800	910	1.04	965	1.20	1016	1.36	1065	1.52	1111	1.69	1155	1.86
	2,100	927	1.21	983	1.38	1035	1.56	1084	1.74	1131	1.92	1175	2.11
	2,400	944	1.41	999	1.59	1052	1.78	1101	1.98	1149	2.18	1193	2.38
	2,700	964	1.63	1018	1.82	1069	2.03	1118	2.24	1165	2.45	—	—
	3,000	989	1.89	1039	2.10	1089	2.31	1136	2.53	1183	2.76	—	—
40RUA*08 40RUQ*08 40RUS*08	2,250	918	1.26	975	1.43	1029	1.62	1079	1.80	1126	1.99	1172	2.18
	2,600	936	1.48	991	1.67	1044	1.87	1094	2.07	1142	2.28	1188	2.49
	3,000	963	1.79	1014	1.99	1064	2.20	1113	2.42	1159	2.64	—	—
	3,400	998	2.18	1045	2.39	1092	2.61	1137	2.83	1182	3.07	—	—
	3,750	1034	2.58	1078	2.80	1122	3.03	1164	3.27	—	—	—	—
40RUA*12 40RUQ*12 40RUS*12	3,000	949	1.74	1000	1.93	1050	2.14	1099	2.36	1147	2.58	1192	2.81
	3,500	990	2.21	1037	2.42	1083	2.64	1128	2.86	1172	3.10	—	—
	4,000	1040	2.80	1084	3.03	1126	3.26	1167	3.50	—	—	—	—
	4,500	1094	3.53	1136	3.78	1176	4.03	—	—	—	—	—	—
	5,000	1151	4.39	1191	4.66	—	—	—	—	—	—	—	—
40RUA*14 40RUS*14	3,750	909	2.37	968	2.74	1026	3.12	1080	3.51	1131	3.92	1181	4.32
	4,300	925	2.73	980	3.11	1034	3.52	1084	3.92	1135	4.35	1184	4.78
	5,000	950	3.26	1002	3.67	1052	4.09	1101	4.53	1148	4.98	1190	5.44
	5,700	981	3.88	1031	4.33	1079	4.79	1125	5.25	1169	5.73	—	—
	6,250	1007	4.42	1057	4.91	1103	5.40	1148	5.90	1191	6.40	—	—
40RUA*16 40RUQ*16 40RUS*16	4,500	912	2.75	967	3.13	1019	3.52	1070	3.92	1120	4.35	1168	4.79
	5,300	940	3.33	992	3.75	1041	4.18	1088	4.61	1134	5.06	1179	5.52
	6,000	968	3.92	1018	4.38	1066	4.85	1112	5.32	1156	5.80	1198	6.29
	6,800	1000	4.67	1050	5.19	1097	5.71	1142	6.23	1185	6.76	—	—
	7,500	1028	5.39	1078	5.97	1125	6.54	1170	7.11	—	—	—	—

See Legend and Notes on page 36.

Table 10B - 40RU Standard Fan Performance Data — 0-600 kPa External Static Pressure — SI

UNIT	AIRFLOW (L/s)	EXTERNAL STATIC PRESSURE (kPa)													
		0		50		100		150		200		250		300	
		r/s	kW	r/s	kW	r/s	kW	r/s	kW	r/s	kW	r/s	kW	r/s	kW
40RUA*07 40RUQ*07	850	6.64	0.14	7.56	0.18	9.13	0.26	10.56	0.35	11.88	0.45	13.08	0.55	14.16	0.66
	990	7.73	0.21	8.28	0.25	9.71	0.34	11.00	0.44	12.22	0.54	13.37	0.66	14.44	0.78
	1130	8.30	0.30	9.02	0.35	10.36	0.45	11.55	0.55	12.67	0.66	13.73	0.78	14.76	0.91
	1270	9.06	0.41	9.79	0.47	11.06	0.58	12.17	0.69	13.20	0.81	14.19	0.94	15.14	1.07
	1420	9.91	0.55	10.58	0.61	11.78	0.74	12.83	0.86	13.80	0.99	14.72	1.12	15.61	1.26
40RUA*08 40RUQ*08 40RUS*08	1060	4.55	0.06	8.21	0.27	9.67	0.37	10.93	0.46	12.11	0.57	13.23	0.68	14.30	0.81
	1230	5.37	0.11	8.99	0.38	10.37	0.49	11.55	0.60	12.62	0.71	13.65	0.84	14.64	0.96
	1420	9.21	0.48	9.92	0.55	11.22	0.67	12.33	0.80	13.33	0.92	14.27	1.05	15.17	1.19
	1600	10.25	0.68	10.89	0.75	12.09	0.90	13.15	1.04	14.10	1.18	14.99	1.33	15.83	1.47
	1770	11.18	0.90	11.76	0.98	12.88	1.14	13.90	1.30	14.82	1.45	15.67	1.61	16.46	1.77
40RUA*12 40RUQ*12 40RUS*12	1420	6.65	0.22	9.55	0.51	10.89	0.64	12.04	0.77	13.06	0.89	14.02	1.02	14.93	1.15
	1650	10.06	0.68	10.69	0.76	11.90	0.91	13.00	1.06	13.97	1.20	14.86	1.35	15.70	1.50
	1890	11.33	0.99	11.88	1.08	12.96	1.25	13.99	1.43	14.93	1.59	15.78	1.76	16.58	1.92
	2120	12.61	1.38	13.11	1.49	14.08	1.68	15.02	1.88	15.92	2.07	16.74	2.26	17.51	2.44
	2360	13.90	1.87	14.36	1.99	15.23	2.21	16.10	2.42	16.94	2.64	17.73	2.85	18.48	3.06
40RUA*14 40RUS*14	1770	6.57	0.30	7.54	0.39	9.31	0.60	10.72	0.82	11.95	1.04	13.09	1.27	14.13	1.52
	2030	7.27	0.43	8.11	0.52	9.76	0.75	11.16	1.00	12.36	1.25	13.44	1.50	14.45	1.76
	2360	8.20	0.64	8.92	0.74	10.38	0.98	11.73	1.26	12.91	1.55	13.97	1.84	14.93	2.13
	2690	9.16	0.92	9.79	1.02	11.07	1.27	12.33	1.58	13.48	1.90	14.53	2.23	15.48	2.56
	2950	9.93	1.18	10.50	1.30	11.66	1.56	12.83	1.87	13.95	2.22	14.98	2.58	15.92	2.94
40RUA*16 40RUQ*16 40RUS*16	2120	7.13	0.44	7.91	0.52	9.50	0.74	10.94	0.99	12.17	1.25	13.26	1.51	14.26	1.77
	2500	8.13	0.68	8.80	0.78	10.15	1.00	11.48	1.27	12.70	1.57	13.78	1.87	14.76	2.18
	2830	9.03	0.96	9.63	1.07	10.81	1.30	12.01	1.58	13.18	1.90	14.25	2.24	15.23	2.58
	3210	10.07	1.37	10.62	1.48	11.66	1.73	12.71	2.01	13.77	2.35	14.80	2.71	15.76	3.09
	3540	10.99	1.81	11.50	1.93	12.45	2.20	13.40	2.49	14.35	2.83	15.31	3.20	16.24	3.60

See Legend and Notes on page 36.

Table 10B - 40RU Standard Fan Performance Data — 0-600 kPa External Static Pressure — SI (cont)

UNIT	AIRFLOW (L/s)	EXTERNAL STATIC PRESSURE (kPa)											
		350		400		450		500		550		600	
		r/s	kW	r/s	kW	r/s	kW	r/s	kW	r/s	kW	r/s	kW
40RUA*07 40RUQ*07	850	15.16	0.78	16.08	0.89	16.94	1.01	17.74	1.13	18.51	1.26	19.25	1.39
	990	15.44	0.90	16.38	1.03	17.25	1.16	18.07	1.30	18.84	1.43	19.58	1.57
	1130	15.73	1.05	16.65	1.19	17.53	1.33	18.36	1.48	19.14	1.62	19.89	1.77
	1270	16.07	1.21	16.96	1.36	17.82	1.51	18.64	1.67	19.42	1.83	—	—
	1420	16.48	1.41	17.32	1.56	18.14	1.72	18.94	1.89	19.71	2.06	—	—
40RUA*08 40RUQ*08 40RUS*08	1060	15.31	0.94	16.25	1.07	17.14	1.20	17.98	1.34	18.77	1.48	19.53	1.63
	1230	15.60	1.10	16.51	1.24	17.39	1.39	18.23	1.54	19.03	1.70	19.80	1.86
	1420	16.05	1.33	16.90	1.48	17.74	1.64	18.54	1.80	19.32	1.97	—	—
	1600	16.64	1.62	17.42	1.78	18.20	1.94	18.95	2.11	19.69	2.29	—	—
	1770	17.23	1.93	17.97	2.09	18.70	2.26	19.41	2.44	—	—	—	—
40RUA*12 40RUQ*12 40RUS*12	1420	15.81	1.29	16.67	1.44	17.51	1.60	18.32	1.76	19.11	1.92	19.87	2.09
	1650	16.51	1.65	17.29	1.80	18.05	1.97	18.80	2.13	19.53	2.31	—	—
	1890	17.34	2.09	18.06	2.26	18.77	2.43	19.45	2.61	—	—	—	—
	2120	18.24	2.63	18.93	2.82	19.59	3.00	—	—	—	—	—	—
	2360	19.18	3.27	19.85	3.48	—	—	—	—	—	—	—	—
40RUA*14 40RUS*14	1770	15.15	1.77	16.13	2.04	17.10	2.33	18.00	2.62	18.85	2.92	19.68	3.22
	2030	15.41	2.04	16.34	2.32	17.24	2.62	18.07	2.92	18.92	3.24	19.73	3.56
	2360	15.84	2.43	16.70	2.74	17.54	3.05	18.35	3.38	19.14	3.71	19.83	4.06
	2690	16.36	2.89	17.19	3.23	17.98	3.57	18.75	3.92	19.49	4.27	—	—
	2950	16.79	3.30	17.61	3.66	18.39	4.03	19.13	4.40	19.84	4.77	—	—
40RUA*16 40RUQ*16 40RUS*16	2120	15.20	2.05	16.12	2.33	16.98	2.62	17.83	2.92	18.67	3.24	19.47	3.57
	2500	15.67	2.49	16.53	2.80	17.35	3.12	18.13	3.44	18.90	3.77	19.65	4.12
	2830	16.13	2.92	16.97	3.27	17.77	3.62	18.53	3.97	19.26	4.33	19.97	4.69
	3210	16.66	3.48	17.50	3.87	18.29	4.26	19.03	4.65	19.75	5.04	—	—
	3540	17.13	4.02	17.97	4.45	18.75	4.88	19.50	5.30	—	—	—	—

See Legend and Notes on page 36.

Table 10C - 40RU High-Capacity Fan Performance Data — 0.0-2.4 in. wg External Static Pressure — English

UNIT	AIRFLOW (Cfm)	EXTERNAL STATIC PRESSURE (in. wg)													
		0.0		0.2		0.4		0.6		0.8		1.0		1.2	
		Rpm	Bhp	Rpm	Bhp	Rpm	Bhp	Rpm	Bhp	Rpm	Bhp	Rpm	Bhp	Rpm	Bhp
40RUA*07 40RUQ*07	1,800	419	0.21	471	0.26	564	0.37	649	0.49	727	0.63	797	0.77	862	0.92
	2,100	471	0.31	519	0.37	602	0.49	679	0.62	751	0.77	819	0.92	882	1.09
	2,400	524	0.44	568	0.51	645	0.64	715	0.79	781	0.94	844	1.11	905	1.28
	2,700	578	0.61	619	0.69	690	0.84	755	0.99	816	1.15	875	1.33	932	1.51
	3,000	633	0.81	671	0.90	738	1.07	799	1.24	856	1.41	910	1.60	963	1.79
40RUA*08 40RUQ*08 40RUS*08	2,250	290	0.10	510	0.39	594	0.51	669	0.65	739	0.79	806	0.95	870	1.12
	2,600	349	0.19	561	0.55	640	0.70	709	0.84	773	1.00	834	1.16	893	1.34
	3,000	579	0.70	621	0.79	695	0.96	759	1.12	818	1.30	874	1.47	928	1.66
	3,400	646	0.99	683	1.09	752	1.29	813	1.48	869	1.67	920	1.86	970	2.06
	3,750	705	1.31	739	1.42	804	1.63	862	1.85	915	2.05	964	2.26	1011	2.48
40RUA*12 40RUQ*12 40RUS*12	3,000	421	0.35	592	0.73	670	0.90	737	1.06	797	1.23	854	1.41	908	1.59
	3,500	626	0.98	664	1.08	735	1.28	798	1.48	855	1.67	908	1.87	958	2.07
	4,000	706	1.42	738	1.54	803	1.77	862	2.00	917	2.23	967	2.45	1014	2.67
	4,500	786	1.99	815	2.12	873	2.39	929	2.65	980	2.90	1028	3.16	1073	3.41
	5,000	867	2.70	893	2.84	946	3.14	997	3.43	1046	3.72	1092	4.00	1135	4.28
40RUA*14 40RUS*14	3,750	410	0.43	467	0.55	567	0.83	649	1.12	721	1.41	788	1.72	851	2.05
	4,300	455	0.62	504	0.74	599	1.05	679	1.38	748	1.70	811	2.04	871	2.39
	5,000	514	0.92	556	1.06	641	1.39	718	1.76	786	2.14	847	2.52	903	2.91
	5,700	575	1.32	612	1.47	686	1.82	759	2.23	825	2.66	884	3.09	939	3.52
	6,250	624	1.71	657	1.87	725	2.24	793	2.66	856	3.12	915	3.59	969	4.06
40RUA*16 40RUQ*16 40RUS*16	4,500	437	0.61	483	0.72	576	1.01	660	1.35	732	1.69	797	2.03	856	2.38
	5,300	499	0.95	538	1.07	617	1.37	696	1.74	767	2.13	830	2.53	888	2.94
	6,000	555	1.34	590	1.48	659	1.79	730	2.17	798	2.59	860	3.04	918	3.49
	6,800	620	1.91	651	2.06	712	2.39	774	2.78	836	3.22	896	3.71	952	4.21
	7,500	677	2.52	706	2.69	761	3.04	817	3.44	873	3.89	929	4.39	984	4.93

See Legend and Notes on page 36.

Table 10C - 40RU High-Capacity Fan Performance Data — 0.0-2.4 in. wg External Static Pressure — English (cont)

UNIT	AIRFLOW (Cfm)	EXTERNAL STATIC PRESSURE (in. wg)											
		1.4		1.6		1.8		2.0		2.2		2.4	
		Rpm	Bhp	Rpm	Bhp	Rpm	Bhp	Rpm	Bhp	Rpm	Bhp	Rpm	Bhp
40RUA*07 40RUQ*07	1,800	921	1.07	975	1.23	1026	1.39	1074	1.55	1120	1.72	1164	1.90
	2,100	942	1.26	997	1.43	1048	1.61	1097	1.79	1143	1.97	1186	2.16
	2,400	963	1.47	1017	1.66	1069	1.85	1118	2.05	1164	2.25	—	—
	2,700	987	1.71	1039	1.91	1090	2.12	1138	2.33	1185	2.55	—	—
	3,000	1015	1.99	1065	2.20	1113	2.42	1161	2.65	—	—	—	—
40RUA*08 40RUQ*08 40RUS*08	2,250	930	1.29	986	1.47	1039	1.65	1089	1.84	1136	2.03	1181	2.22
	2,600	950	1.53	1005	1.72	1057	1.92	1107	2.13	1154	2.33	—	—
	3,000	980	1.86	1031	2.06	1081	2.27	1129	2.49	1175	2.72	—	—
	3,400	1018	2.26	1065	2.48	1111	2.70	1156	2.93	—	—	—	—
	3,750	1057	2.69	1101	2.92	1144	3.15	1186	3.39	—	—	—	—
40RUA*12 40RUQ*12 40RUS*12	3,000	961	1.78	1012	1.98	1062	2.19	1111	2.41	1158	2.64	—	—
	3,500	1005	2.27	1052	2.49	1098	2.71	1142	2.94	1186	3.18	—	—
	4,000	1058	2.90	1101	3.13	1143	3.36	1184	3.60	—	—	—	—
	4,500	1116	3.66	1157	3.91	1196	4.16	—	—	—	—	—	—
	5,000	1176	4.56	—	—	—	—	—	—	—	—	—	—
40RUA*14 40RUS*14	3,750	912	2.39	971	2.76	1028	3.14	1083	3.54	1135	3.95	1185	4.36
	4,300	928	2.75	982	3.13	1036	3.53	1087	3.94	1138	4.37	1187	4.81
	5,000	956	3.30	1007	3.71	1056	4.13	1104	4.56	1151	5.00	1196	5.46
	5,700	990	3.96	1039	4.40	1086	4.85	1130	5.31	1174	5.78	—	—
	6,250	1019	4.54	1067	5.02	1112	5.50	1156	5.99	1198	6.49	—	—
40RUA*16 40RUQ*16 40RUS*16	4,500	912	2.75	967	3.12	1019	3.52	1070	3.92	1120	4.35	1168	4.79
	5,300	942	3.34	992	3.76	1041	4.18	1088	4.61	1134	5.06	1179	5.52
	6,000	971	3.95	1020	4.40	1067	4.86	1112	5.33	1156	5.81	1198	6.29
	6,800	1005	4.72	1054	5.23	1101	5.75	1145	6.27	1187	6.79	—	—
	7,500	1036	5.48	1084	6.04	1131	6.61	1174	7.17	—	—	—	—

See Legend and Notes on page 36.

Table 10D - 40RU High-Capacity Fan Performance Data — 0-600 kPa External Static Pressure — SI

UNIT	AIRFLOW (L/s)	EXTERNAL STATIC PRESSURE (kPa)													
		0		50		100		150		200		250		300	
		r/s	kW	r/s	kW	r/s	kW	r/s	kW	r/s	kW	r/s	kW	r/s	kW
40RUA*07 40RUQ*07	850	6.98	0.16	7.86	0.19	9.40	0.27	10.81	0.37	12.11	0.47	13.29	0.57	14.36	0.69
	990	7.84	0.23	8.64	0.27	10.03	0.36	11.31	0.46	12.52	0.57	13.65	0.69	14.71	0.81
	1130	8.73	0.33	9.46	0.38	10.75	0.48	11.91	0.59	13.01	0.70	14.07	0.83	15.08	0.96
	1270	9.63	0.45	10.31	0.51	11.51	0.62	12.58	0.74	13.60	0.86	14.58	0.99	15.53	1.13
	1420	10.55	0.61	11.18	0.67	12.30	0.80	13.31	0.92	14.26	1.05	15.17	1.19	16.05	1.33
40RUA*08 40RUQ*08 40RUS*08	1060	4.83	0.07	8.50	0.29	9.91	0.38	11.15	0.48	12.32	0.59	13.44	0.71	14.50	0.83
	1230	5.81	0.14	9.35	0.41	10.67	0.52	11.81	0.63	12.88	0.74	13.90	0.87	14.89	1.00
	1420	9.65	0.52	10.35	0.59	11.59	0.71	12.66	0.84	13.64	0.97	14.57	1.10	15.47	1.24
	1600	10.76	0.74	11.39	0.81	12.54	0.96	13.55	1.10	14.48	1.24	15.34	1.39	16.17	1.53
	1770	11.74	0.97	12.32	1.06	13.40	1.22	14.37	1.38	15.25	1.53	16.07	1.69	16.86	1.85
40RUA*12 40RUQ*12 40RUS*12	1420	7.02	0.26	9.86	0.54	11.17	0.67	12.28	0.79	13.29	0.92	14.23	1.05	15.14	1.19
	1650	10.44	0.73	11.06	0.80	12.25	0.96	13.31	1.10	14.25	1.25	15.13	1.39	15.96	1.54
	1890	11.76	1.06	12.31	1.15	13.38	1.32	14.37	1.49	15.28	1.66	16.11	1.83	16.89	1.99
	2120	13.10	1.48	13.59	1.58	14.55	1.78	15.48	1.97	16.34	2.17	17.14	2.35	17.89	2.54
	2360	14.45	2.01	14.89	2.12	15.76	2.34	16.62	2.56	17.43	2.77	18.20	2.98	18.92	3.19
40RUA*14 40RUS*14	1770	6.84	0.32	7.78	0.41	9.46	0.62	10.82	0.83	12.02	1.05	13.13	1.28	14.19	1.53
	2030	7.58	0.46	8.40	0.55	9.98	0.78	11.31	1.03	12.47	1.27	13.52	1.52	14.51	1.78
	2360	8.57	0.69	9.27	0.79	10.68	1.04	11.96	1.31	13.09	1.60	14.11	1.88	15.05	2.17
	2690	9.59	0.99	10.20	1.10	11.44	1.36	12.64	1.66	13.74	1.98	14.74	2.30	15.65	2.63
	2950	10.40	1.28	10.96	1.39	12.09	1.67	13.21	1.98	14.27	2.33	15.25	2.68	16.15	3.03
40RUA*16 40RUQ*16 40RUS*16	2120	7.28	0.45	8.05	0.54	9.60	0.75	11.00	1.00	12.21	1.26	13.28	1.51	14.27	1.78
	2500	8.32	0.71	8.97	0.80	10.29	1.02	11.59	1.30	12.78	1.59	13.84	1.89	14.80	2.19
	2830	9.25	1.00	9.83	1.10	10.99	1.33	12.16	1.62	13.29	1.93	14.34	2.27	15.30	2.60
	3210	10.33	1.42	10.85	1.54	11.87	1.78	12.90	2.07	13.93	2.40	14.93	2.76	15.87	3.14
	3540	11.29	1.88	11.77	2.01	12.69	2.27	13.62	2.56	14.56	2.90	15.49	3.27	16.40	3.67

See Legend and Notes on page 36.

Table 10D - 40RU High-Capacity Fan Performance Data — 0-600 kPa External Static Pressure — SI (cont)

UNIT	AIRFLOW (L/s)	EXTERNAL STATIC PRESSURE (kPa)											
		350		400		450		500		550		600	
		r/s	kW	r/s	kW	r/s	kW	r/s	kW	r/s	kW	r/s	kW
40RUA*07 40RUQ*07	850	15.34	0.80	16.25	0.92	17.10	1.03	17.90	1.16	18.66	1.28	19.39	1.41
	850	15.69	0.94	16.61	1.07	17.47	1.20	18.28	1.33	19.04	1.47	19.77	1.61
	1130	16.04	1.09	16.95	1.23	17.81	1.38	18.63	1.53	19.40	1.67	—	—
	1270	16.44	1.27	17.32	1.42	18.17	1.58	18.97	1.74	19.75	1.90	—	—
	1420	16.91	1.49	17.75	1.64	18.56	1.81	19.34	1.97	—	—	—	—
40RUA*08 40RUQ*08 40RUS*08	1060	15.50	0.96	16.43	1.10	17.31	1.23	18.14	1.37	18.93	1.51	19.68	1.66
	1230	15.84	1.14	16.75	1.28	17.62	1.43	18.45	1.58	19.24	1.74	—	—
	1420	16.34	1.38	17.19	1.54	18.01	1.70	18.81	1.86	19.59	2.03	—	—
	1600	16.97	1.69	17.76	1.85	18.52	2.02	19.27	2.19	—	—	—	—
	1770	17.61	2.01	18.35	2.18	19.07	2.35	19.77	2.53	—	—	—	—
40RUA*12 40RUQ*12 40RUS*12	1420	16.02	1.33	16.87	1.48	17.71	1.64	18.52	1.80	19.30	1.97	—	—
	1650	16.76	1.70	17.53	1.85	18.29	2.02	19.04	2.19	19.77	2.37	—	—
	1890	17.64	2.16	18.35	2.33	19.05	2.51	19.74	2.69	—	—	—	—
	2120	18.60	2.73	19.28	2.91	19.93	3.10	—	—	—	—	—	—
	2360	19.61	3.40	—	—	—	—	—	—	—	—	—	—
40RUA*14 40RUS*14	1770	15.21	1.78	16.19	2.06	17.13	2.34	18.04	2.64	18.91	2.94	19.75	3.25
	2030	15.46	2.05	16.37	2.33	17.26	2.63	18.12	2.94	18.96	3.26	19.78	3.59
	2360	15.94	2.46	16.78	2.77	17.60	3.08	18.40	3.40	19.18	3.73	19.94	4.07
	2690	16.51	2.95	17.32	3.28	18.09	3.62	18.84	3.96	19.57	4.31	—	—
	2950	16.99	3.39	17.78	3.74	18.54	4.10	19.26	4.47	19.96	4.84	—	—
40RUA*16 40RUQ*16 40RUS*16	2120	15.21	2.05	16.11	2.33	16.98	2.62	17.83	2.93	18.66	3.24	19.47	3.57
	2500	15.69	2.49	16.54	2.80	17.35	3.12	18.14	3.44	18.90	3.77	19.64	4.11
	2830	16.18	2.94	17.01	3.28	17.79	3.63	18.54	3.97	19.27	4.33	19.97	4.69
	3210	16.75	3.52	17.57	3.90	18.34	4.29	19.08	4.67	19.78	5.06	—	—
	3540	17.26	4.09	18.07	4.50	18.84	4.93	19.57	5.35	—	—	—	—

See Legend and Notes on page 36.

Legend and Notes for Tables 10A and 10C

LEGEND

Bhp — Brake Horsepower Input to Fan
ESP — External Static Pressure

NOTES:
1. Maximum allowable fan speed is 1200 rpm for all sizes.
2. Fan performance is based on deductions for wet coil, clean 2–in. filters, and unit casing. See table at right for factory–supplied filter pressure drop.
3. Refer to fan motor and drive tables for additional data.

FACTORY-SUPPLIED PRESSURE DROP — ENGLISH

UNIT	AIRFLOW (Cfm)	PRESSURE DROP (in. wg)
40RUA*07 40RUQ*07	850	0.05
	1150	0.08
	1450	0.11
40RUA*08 40RUQ*08 40RUS*08	2,250	0.07
	3,000	0.11
	3,750	0.15
40RUA*12 40RUQ*12 40RUS*12	3,000	0.11
	4,000	0.17
	5,000	0.23
40RUA*14 40RUS*14	3,750	0.06
	5,000	0.10
	6,250	0.13
40RUA*16 40RUQ*16 40RUS*16	4,500	0.08
	6,000	0.12
	7,500	0.17

40RU

Legend and Notes for Tables 10B and 10D

LEGEND

ESP — External Static Pressure

NOTES:
1. Maximum allowable fan speed is 20 r/s for all sizes.
2. Fan performance is based on deductions for wet coil, clean 51–mm filters, and unit casing. See table at right for factory–supplied filter pressure drop.
3. Refer to fan motor and drive tables for additional data.

FACTORY-SUPPLIED PRESSURE DROP — SI

UNIT	AIRFLOW (L/s)	PRESSURE DROP (Pa)
40RUA*07 40RUQ*07	850	13
	1150	20
	1450	28
40RUA*08 40RUQ*08 40RUS*08	1000	17
	1400	27
	1800	38
40RUA*12 40RUQ*12 40RUS*12	1450	28
	1900	42
	2350	56
40RUA*14 40RUS*14	1750	15
	2350	24
	2950	33
40RUA*16 40RUQ*16 40RUS*16	2100	20
	2800	30
	3500	42

Copyright 2011 Carrier Corp. • 7310 W. Morris St. • Indianapolis, IN 46231 Printed in U.S.A. Edition Date: 01/11

Catalog No: 40RU–08SI

Manufacturer reserves the right to change, at any time, specifications and designs without notice and without obligations.

Replaces: 40RU–06SI

START-UP CHECKLIST

(SPLIT SYSTEMS WITH 40RU UNITS)

I. PRELIMINARY INFORMATION

OUTDOOR: MODEL NO. _____ INDOOR: MODEL NO. _____

SERIAL NO. _____ SERIAL NO. _____

ADDITIONAL ACCESSORIES _____

II. PRE-START-UP

OUTDOOR UNIT

IS THERE ANY SHIPPING DAMAGE? (Y/N) _____

IF SO, WHERE: _____

_____

WILL THIS DAMAGE PREVENT UNIT START-UP? (Y/N) _____

CHECK POWER SUPPLY. DOES IT AGREE WITH UNIT? (Y/N) _____

HAS THE GROUND WIRE BEEN CONNECTED? (Y/N) _____

HAS THE CIRCUIT PROTECTION BEEN SIZED AND INSTALLED PROPERLY? (Y/N) _____

ARE THE POWER WIRES TO THE UNIT SIZED AND INSTALLED PROPERLY? (Y/N) _____

HAVE COMPRESSOR HOLDDOWN BOLTS BEEN LOOSENED? (Y/N) _____

CONTROLS

ARE THERMOSTAT(S) & INDOOR FAN CONTROL WIRING CONNECTIONS MADE & CHECKED? (Y/N) _____

ARE ALL WIRING TERMINALS (including main power supply) TIGHT? (Y/N) _____

HAVE OUTDOOR UNIT CRANKCASE HEATERS BEEN ENERGIZED FOR 24 HOURS? (Y/N) _____

INDOOR UNIT

HAS WATER BEEN PLACED IN DRAIN PAN TO CONFIRM PROPER DRAINAGE? (Y/N) _____

ARE PROPER AIR FILTERS IN PLACE? (Y/N) _____

HAVE FAN AND MOTOR PULLEYS BEEN CHECKED FOR PROPER ALIGNMENT? (Y/N) _____

DO THE FAN BELTS HAVE PROPER TENSION? (Y/N) _____

PIPING

40RUA, 40RUQ

HAS FOAM SHIPPING BLOCK BEEN REMOVED FROM THE TXV (Thermostatic Expansion Valve)? (Y/N) _____

ARE LIQUID LINE SOLENOID VALVES LOCATED AT THE INDOOR UNIT (40RUA) OR OUTDOOR UINT (40RUQ) COILS AS REQUIRED? (Y/N) _____

HAVE LEAK CHECKS BEEN MADE AT COMPRESSORS, CONDENSERS, INDOOR COILS, TXVs (Thermostatic Expansion Valves) SOLENOID VALVES, FILTER DRIERS, AND FUSIBLE PLUGS WITH A LEAK DETECTOR? (Y/N) _____

LOCATE, REPAIR, AND REPORT ANY LEAKS _____

HAVE ALL COMPRESSOR SERVICE VALVES BEEN FULLY OPENED (BACKSEATED) (Y/N) _____

ARE THE COMPRESSOR OIL SIGHT GLASSES SHOWING CORRECT LEVELS? (Y/N) _____

40RUS

HAS AIR BEEN BLED FROM SYSTEM? (Y/N) _____

HAVE LEAK CHECKS BEEN MADE AT COMPRESSORS, CHILLERS, VALVES, & INDOOR COILS? (Y/N) _____

LOCATE, REPAIR, AND REPORT ANY LEAKS. _____

CHECK VOLTAGE IMBALANCE

LINE-TO-LINE VOLTS: AB _____ V AC _____ V BC _____ V

(AB + AC + BC)/3 = AVERAGE VOLTAGE = _____ V

MAXIMUM DEVIATION FROM AVERAGE VOLTAGE = _____ V

VOLTAGE IMBALANCE = 100 X (MAX DEVIATION)/(AVERAGE VOLTAGE) = _____

IF OVER 2% VOLTAGE IMBALANCE, DO NOT ATTEMPT TO START SYSTEM!
CALL LOCAL POWER COMPANY FOR ASSISTANCE.

III. START-UP

CHECK INDOOR FAN MOTOR SPEED AND RECORD.

AFTER AT LEAST 10 MINUTES RUNNING TIME, RECORD THE FOLLOWING MEASUREMENTS:

	COMP A1	COMP B1
OIL PRESSURE	_____	_____
SUCTION PRESSURE	_____	_____
SUCTION LINE TEMP	_____	_____
DISCHARGE PRESSURE	_____	_____
DISCHARGE LINE TEMP	_____	_____
ENTERING OUTDOOR UNIT AIR TEMP	_____	_____
LEAVING OUTDOOR UNIT AIR TEMP	_____	_____
INDOOR UNIT ENTERING AIR DB TEMP	_____	_____
INDOOR UNIT ENTERING AIR WB TEMP	_____	_____
INDOOR UNIT LEAVING AIR DB TEMP	_____	_____
INDOOR UNIT LEAVING AIR WB TEMP	_____	_____
OUTDOOR UNIT ENTERING WATER TEMP (40RUS ONLY)	_____	_____
OUTDOOR UNIT LEAVING WATER TEMP (40RUS ONLY)	_____	_____
INDOOR UNIT ENTERING WATER TEMP (40RUS ONLY)	_____	_____
INTDOOR UNIT LEAVING WATER TEMP (40RUS ONLY)	_____	_____
COMPRESSOR AMPS (L1/L2/L3)	___/___/___	___/___/___

CHECK THE COMPRESSOR OIL LEVEL SIGHT GLASSES, ARE THE SIGHT GLASSES SHOWING OIL LEVEL AT $^1/_8$ to $^1/_3$ FULL? (Y/N) _____

NOTES:

_____

_____

_____

_____

_____

_____

_____

_____

_____

_____

_____

Copyright 2011 Carrier Corp. • 7310 W. Morris St. • Indianapolis, IN 46231 Printed in U.S.A. Edition Date: 01/11

Catalog No: 40RU–08SI

Manufacturer reserves the right to change, at any time, specifications and designs without notice and without obligations.

Replaces: 40RU–06SI