45VMI
VRF 1 Way Cassette
45VMI007---3

Submittal Data

Job Name_____ Location_____
Tag _____

A261086

Fig. 1 – 1 Way Cassette

VRF 1 Way Cassette Features

- A wired remote control, available as an accessory (optional to the customer), displays either °F or °C.
- Indoor units are powered from a dedicated power supply (not powered by outdoor unit).
- Internally Installed A2L Refrigerant Leak Sensor.
- The system will utilize R-454B as a refrigerant.

UNIT MODEL	45VMI007---3	
PERFORMANCE		
Cooling Capacity	Btu/h	7,000
Heating Capacity	Btu/h	8,000
Airflow Level (Highest to Lowest)	CFM	237/225/213/202/190/178/166
Sound Pressure Level (Highest to Lowest)	dBA	36/35/34/33/32/32/31
ELECTRICAL		
Power Supply	V/Ph/Hz	208-230/1/60
Motor Output	W	13
Motor Type		DC
Minimum Circuit Amps (MCA)	A	0.53
Maximum Overcurrent Protection (MOP)	A	15

PHYSICAL DATA		
Pipe Connection Size - Liquid (High Pressure)	in.	1/4
Pipe Connection Size - Gas (Low Pressure)	in.	1/2
Pipe Connection Size - Drain	in.	1
Refrigerant		R-454B
Unit Width	in.	27-9/16
Unit Height	in.	5-1/8
Unit Depth	in.	16-3/4
Unit Net Weight	lbs.	23.04
Panel Width	in.	38-9/16
Panel Height	in.	2-1/2
Panel Depth	in.	18-11/16
Panel Net Weight	lbs.	5.29

Accessories

- Wireless Remote Controller — 45VM900001
- Programmable Wired Remote Controller — 45VM900002
- Touchscreen Programmable Wired Remote Controller — 45VM900003
- Touchscreen Central Controller — 45VM900006A
- Multi-Protocol Gateway — 45VM900052A
- Grille — 45VMI001----

INDOOR UNIT 1 WAY CASSETTE 45VMI007---3
DIMENSIONAL DRAWING

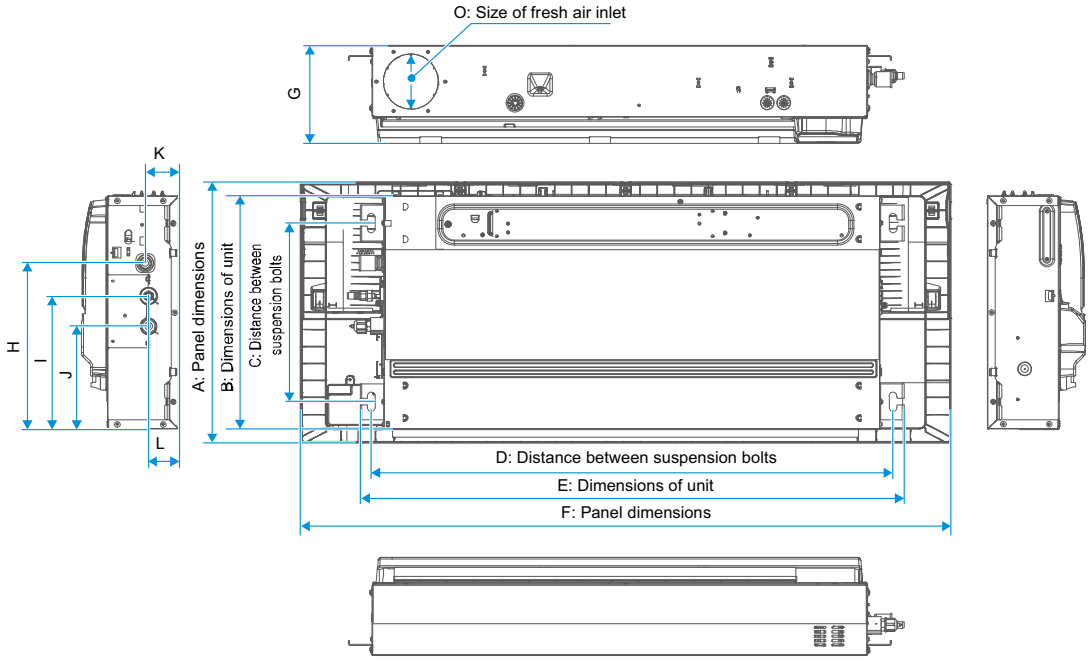

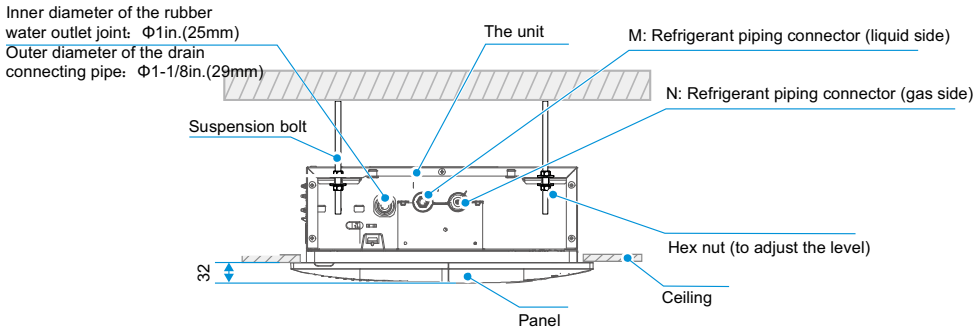

Capacity	A	B	C	D	E	F	G	H
kBtu/h ≤ 7	18-11/16(475)	16-3/4(425)	12-13/16(325)	29-3/8(746)	30-15/16(786)	38-9/16(980)	7(178)	11-15/16(303)
7＜kBtu/h ≤ 12	18-11/16(475)	16-3/4(425)	12-13/16(325)	37-1/4(946)	38-13/16(986)	46-7/16(1180)	7(178)	11-15/16(303)
12＜kBtu/h ≤ 24	18-11/16(475)	16-3/4(425)	12-13/16(325)	49-1/16(1246)	50-5/8(1286)	58-1/4(1480)	7(178)	11-15/16(303)

Capacity	I	J	K	L	M	N	O
kBtu/h ≤ 7	9-9/16(243)	7-3/8(188)	2-3/8(60)	2-3/16(55)	Φ1/4(6.35)	Φ1/2(12.7)	2-3/8(60)
7＜kBtu/h ≤ 12	9-9/16(243)	7-3/8(188)	2-3/8(60)	2-3/16(55)	Φ1/4(6.35)	Φ1/2(12.7)	3-15/16(100)
12＜kBtu/h ≤ 24	9-9/16(243)	7-3/8(188)	2-3/8(60)	2-3/16(55)	Φ1/4(6.35)	Φ1/2(12.7)	3-15/16(100)

A261282

Fig. 2 – Dimensional Drawing — Units: in. (mm.)

©2026 Carrier. All rights reserved.
A Carrier Company

Edition Date: 09/26

Catalog No: 45VMI007---3-B-1SD
Replaces: New

Manufacturer reserves the right to change, at any time, specifications and designs without notice and without obligations.