48/50LC 07−26
Factory Installed Option
RTU Open
Multi−Protocol Controller

Carrier
turn to the experts

Controls, Start−Up, Operation and Troubleshooting

TABLE OF CONTENTS

SAFETY CONSIDERATIONS 2
GENERAL 2
SENSOR/ACCESSORY INSTALLATION 2
Sensors and Accessories 4
User Interfaces 4
Install Analog Sensors 4
Supply Air Sensor (SAT) 4
Outdoor Air Sensor (OAT) 4
Space Temperature Sensor (SPT) 4
CO_2 Sensor(s) (IAQ and OAQ) 6
Relative Humidity Sensors 8
Installing Discrete Inputs 8
Compressor Safety 8
Humidistat 8
Single Enthalpy (Outdoor Enthalpy) 8
Differential Enthalpy 8
Fire Shutdown 9
Filter Status 9
Fan Status 9
Remote Occupancy 9
IGC Override 9
Communication Wiring-Protocols 10
General 10
i-Vu® Open 10
BACnet® MS/TP 10
Modbus 11
Johnson N2 11
LonWorks 11
Local Access 12
START-UP 13
Additional Installation/Inspection 13
Humidi-MiZer® Control Wiring 13
Power Exhaust Relay Power 13
Service Test 13
Fan Test 13
High Speed Fan Test 13
Compressor 1 and Compressor 2 Test 13
Heat 1 and Heat 2 Test 13
Dehumidification Test 13
Power Exhaust Test 13
Economizer Test 14
VFD Speed Test 14
Configuration 14
Setpoint 14
Unit 14
Inputs 15
Service 16
Clockset 16
USERPW 16
OPERATION 17
Occupancy 17
Indoor (Supply) Fan 17
Cooling 17
Supply Fan 18
Economizer 18
Power Exhaust 18
Pre-Occupancy Purge 19
Heating 19
Indoor Air Quality 19
Dehumidification 19
Demand Limit 20
Unoccupied Free Cooling 20
Optimal Start 20
Fire Shutdown 20
Compressor Safety 20
Fan Status 20
Filter Status 20
Door Switch 20
Linkage 20
TROUBLESHOOTING 21
General 21
Replacing the RTU Open's Battery 21
Thermistor Troubleshooting 21
Software Version 22
Communication LED's 22
Alarms 24
Performance 25
Third Party Networking 26
APPENDIX A - USER INTERFACE MENUS 28
APPENDIX B - THIRD PARTY POINTS LIST 37
RTU OPEN START-UP SHEET 41

SAFETY CONSIDERATIONS

Installation and servicing of air-conditioning equipment can be hazardous due to system pressure and electrical components. Only trained and qualified service personnel should install, repair, or service air-conditioning equipment. Untrained personnel can perform the basic maintenance functions of replacing filters. Trained service personnel should perform all other operations.

When working on air-conditioning equipment, observe precautions in the literature, tags and labels attached to the unit, and other safety precautions that may apply. Follow all safety codes. Wear safety glasses and work gloves.

Follow all safety codes. Wear safety glasses and work gloves. Have fire extinguisher available. Read these instructions thoroughly and follow all warnings or cautions attached to the unit. Consult local building codes and National Electrical Code (NEC) for special requirements.

Recognize safety information. This is the safety-alert symbol ⚠. When you see this symbol on the unit and in instructions or manuals, be alert to the potential for personal injury.

Understand the signal words DANGER, WARNING, and CAUTION. These words are used with the safety-alert symbol. DANGER identifies the most serious hazards which **will** result in severe personal injury or death. WARNING signifies a hazard which **could** result in personal injury or death. CAUTION is used to identify unsafe practices which **may** result in minor personal injury or product and property damage. NOTE is used to highlight suggestions which **will** result in enhanced installation, reliability, or operation.

⚠ WARNING

ELECTRICAL SHOCK HAZARD

Failure to follow this warning could result in personal injury or death.

Disconnect all power to the unit before performing maintenance or service. Unit may automatically start if power is disconnected.

GENERAL

The RTU Open controller is an integrated component of the Carrier rooftop unit. Its internal application programming provides optimum performance and energy efficiency. RTU Open enables the unit to run in 100% stand-alone control mode, Carrier's i-Vu® Open network, or a Third Party Building Automation System (BAS). On-board DIP switches allow you to select your protocol (and baud rate) of choice among the four most popular protocols in use today: BACnet®, Modbus, Johnson N2 and LonWorks. (See Fig. 1.)

NOTE: Lon Works requires addition of LonWorks Option card.

Carrier's diagnostic display tools such as BACview[6] Handheld, Virtual BACview or Field Assistant can be used with the RTU Open controller. Access is available via a 5-pin J12 access port.

SENSOR/ACCESSORY INSTALLATION

There are a variety of sensors and accessories available for the RTU Open. Some of these can be factory or field installed, while others are only field installable. The RTU Open controller may also require connection to a building network system or building zoning system. All field control wiring that connects to the RTU Open must be routed through the raceway built into the corner post of the unit or secured to the unit control box with electrical conduit. The unit raceway provides the UL required clearance between high and low-voltage wiring. Pass the control wires through the hole provided in the corner post, then feed the wires thorough the raceway to the RTU Open. Connect the wires to the removable Phoenix connectors and then reconnect the connectors to the board. See Fig. 1 and Table 1 for board connections and Fig. 2 for Typical Factory RTU Open wiring.

IMPORTANT: Refer to the specific sensor or accessory instructions for its proper installation and for rooftop unit installation refer to base unit installation instructions and the unit's wiring diagrams.

⚠ WARNING

ELECTRICAL SHOCK HAZARD

Failure to follow this warning could result in personal injury, death and/or equipment damage.

Disconnect electrical power and use lock-out tags before wiring the RTU Open controller.

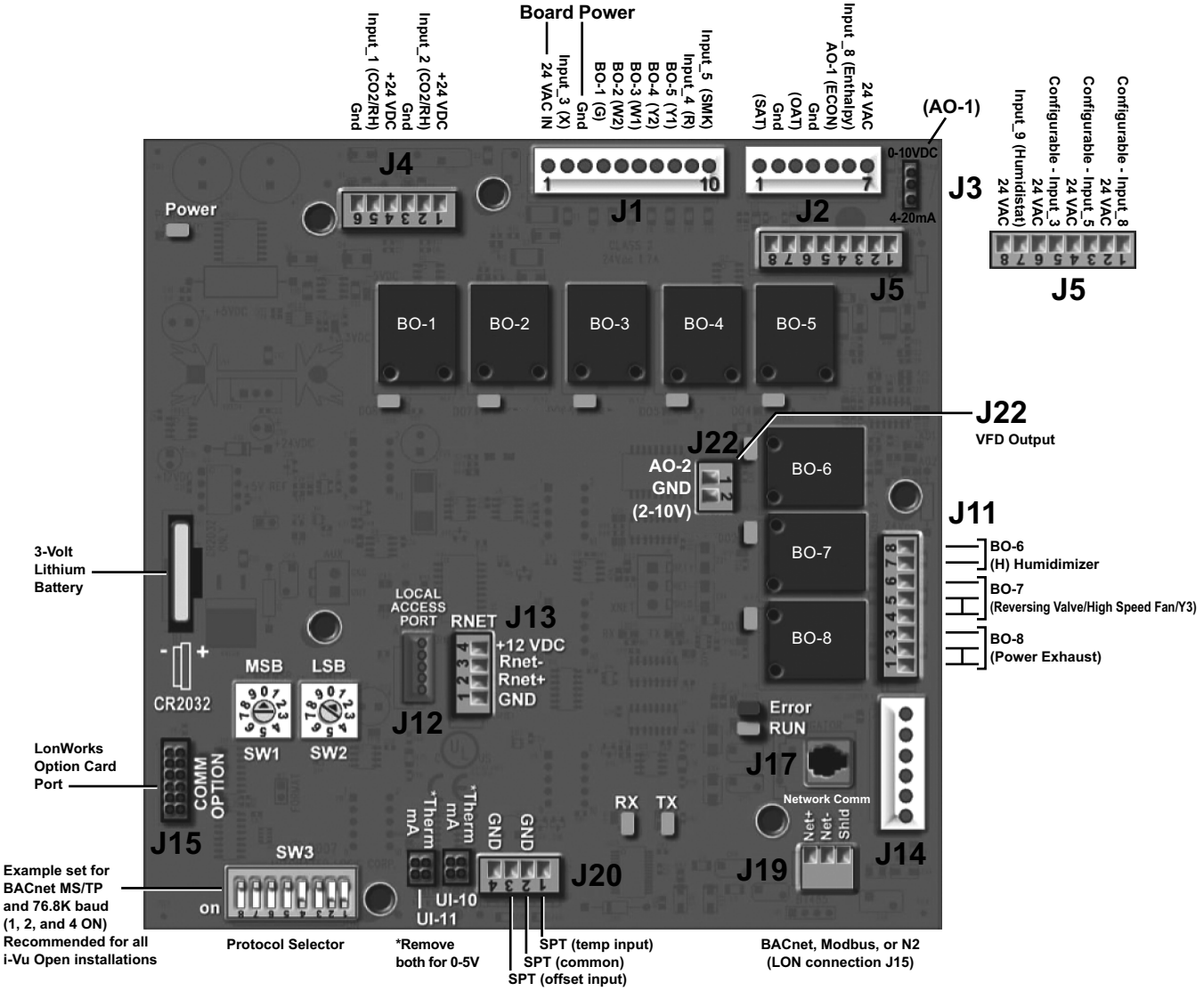

Fig. 1 - RTU Open Control Module

Table 1 – RTU Open Inputs and Outputs

POINT NAME	BACnet OBJECT NAME	TYPE OF I/O	CONNECTION PIN NUMBER(S)	CHANNEL DESIGNATION
DEDICATED INPUTS				
Space Temp / Zone Temp	zone_temp	AI (10K Thermistor)	J20–1 & 2	Analog Input 10
Supply Air Temperature	sa_temp	AI (10K Thermistor)	J2–1 & 2	Analog Input 6
Outside Air Temperature	oa_temp	AI (10K Thermistor)	J2–3 & 4	Analog Input 7
Space Temperature Offset Pot	stpt_adj_offset	AI (100K Potentiometer)	J20–3 & 4	Analog Input 11
Safety Chain Feedback	safety_status	BI (24 VAC)	J1–9	Binary Input 4
Compressor Safety Status (1)	comp_status	BI (24 VAC)	J1–2	Binary Input 3
Fire Shutdown Status	firedown_status	BI (24 VAC)	J1–10	Binary Input 5
Enthalpy Status	enthalpy_status	BI (24 VAC)	J2–6 & 7	Binary Input 8
Humidistat Input Status	humstat_status	BI (24 VAC)	J5–7 & 8	Binary Input 9
Zone Temperature	n/a	n/a	J13–1–4	Rnet
CONFIGURABLE INPUTS (4)				
Indoor Air CO2	iaq	AI (4–20 mA)	J4–2 & 3 or J4–5 & 6	Analog Input 2
Outdoor Air CO2	oaq	AI (4–20 mA)		Analog Input 1
Space Relative Humidity	space_rh	AI (4–20 mA)		Analog Input 10
Supply Fan Status (2)	sfan_status	BI (24 VAC)	J5–1 & 2 or J5–3 & 4, J5–5 & 6 or J5–7 & 8 (3)	Binary Input 3, 5, 8, or 9, except where intrinsic input is used
Filter Status (2)	filter_status	BI (24 VAC)		Binary Input 3, 5, 8, or 9, except where intrinsic input is used
Door Contact (2)	door_contact_status	BI (24 VAC)		Binary Input 3, 5, 8, or 9, except where intrinsic input is used
Remote Occupancy input (2)	occ_contact_status	BI (24 VAC)		Binary Input 3, 5, 8, or 9, except where intrinsic input is used
IGC input (2)	igcovr_status	BI (24 VAC)		Binary Input 9. Mandatory input on gas heat units.
OUTPUTS				
Economizer Output	econ_output	AO (4–20mA)	J2–5	Analog Output 1
Supply Fan VFD	vfd_output	AO (2–10Vdc)	J22–1 & 2	Analog Output 2
Supply Fan Relay	sfan	BO Relay (24VAC, 1A)	J1–4	Binary Output 1 (G)
Cool 1 Relay State	comp_1	BO Relay (24VAC, 1A)	J1–8	Binary Output 5 (Y1)
Cool 2 Relay State	comp_2	BO Relay (24VAC, 1A)	J1–7	Binary Output 4 (Y2)
Cool 3 Relay State	comp_3	BO Relay (24VAC, 1A)	J11–5 & 6	Binary Output 7 (Y3)
Heat 1 Relay State	heat_1	BO Relay (24VAC, 1A)	J1–6	Binary Output 3 (W1)
Heat 2 Relay State	heat_2	BO Relay (24VAC, 1A)	J1–5	Binary Output 2 (W2)
Power Exhaust Relay State	pexh	BO Relay (24VAC, 1A)	J11–2 & 3 (N.O.)	Binary Output 8 (PE)
Dehumidification Relay	dehum	BO Relay (24VAC, 1A)	J11–7 & 8 (N.O.)	Binary Output 6

(1) Safety Chain Feedback: 24Vac required at this terminal to provide "Run Enable" status. See Input/Output section for additional instructions.
(2) These inputs are configurable. If installed, thy take the place of the default input on the specific channel. See appropriate Input Configuration Section for wiring and setup instructions.
(3) Parallel pins J5–1 = J2–6, J5–3 = J1–10, J5–5 = J1–2 are used for filed installation.
(4) Refer to the input configuration and accessory sections for more detail.

Sensors and Accessories

The RTU Open controller is configurable with the following field-supplied sensors:

NOTE: Supply air temperature sensor (33ZCSENSAT) is factory-installed.

- Space temperature sensor (SPS, SPPL, SPP, SPPF, 33ZCT55SPT, 33ZCT56SPT, or 33ZCT59SPT)
- Indoor air quality sensor (33ZCSPTCO2-01, 33ZCSPTCO2LCD-01, 33ZCT55CO2, 33ZCT56CO2-02) required for demand control ventilation.
- Outdoor air quality sensor (33ZCSPTCO2-01, 33ZCSPTCO2LCD-01)
- CO_2 aspirator box (C33ZCCASPCO2) required for CO_2 return duct/outside air applications
- Outdoor air enthalpy switch (33CSENTHSW)
- Return air enthalpy sensor (33CSENTSEN) required for differential enthalpy control
- Space relative humidity sensor (33ZCSENSRH-02)
- Duct relative humidity (33ZCSENDRH-02)
- Humidistat (--HL--38MG-029) (not permitted for use on units with gas heat due to same input as IGC input)
- Smoke Detectors (CRSMKSEN002A00, CRSMKKIT002A00)
- Fan and/or Filter Status (CRSTATUS001A00, CRSTATUS005A00)

User Interfaces

- BACview6 Handheld (BV6H)
- Virtual BACview (USB-L or USB-TKIT required)
- Field Assistant (USB-TKIT required)

Install Analog Sensors

Supply Air Sensor (SAT)

The factory supplies the discharge (supply) air sensor with the unit and is pre-wired. On 07-12 size units, the SAT is secured to the unit's supply duct opening. This sensor must be relocated into the supply duct during unit installation. On 14-26 size units, the SAT is mounted through the side of the heat chamber below the fan deck, and does NOT require relocation.

Outdoor Air Sensor (OAT)

The OAT is supplied with the economizer option or accessory. It is wired through the 12-pin plug (PL6) in the return air section of the unit and is mounted on the economizer assembly.

Space Temperature Sensor (SPT)

There are 2 types of SPT sensors available from Carrier, resistive input non-communicating (T55, T56, and T59) and Rnet communicating (SPS, SPPL, SPP, and SPPF) sensors. Each type has a variety of options consisting of: timed override button, set point adjustment, a LCD screen, and communication tie in. Space temperature can be also be written to from a building network or zoning system. However, it is still recommended that return air duct sensor be installed to allow stand-alone operation for back-up. Refer to the configuration section for details on controller configurations associated with space sensors.

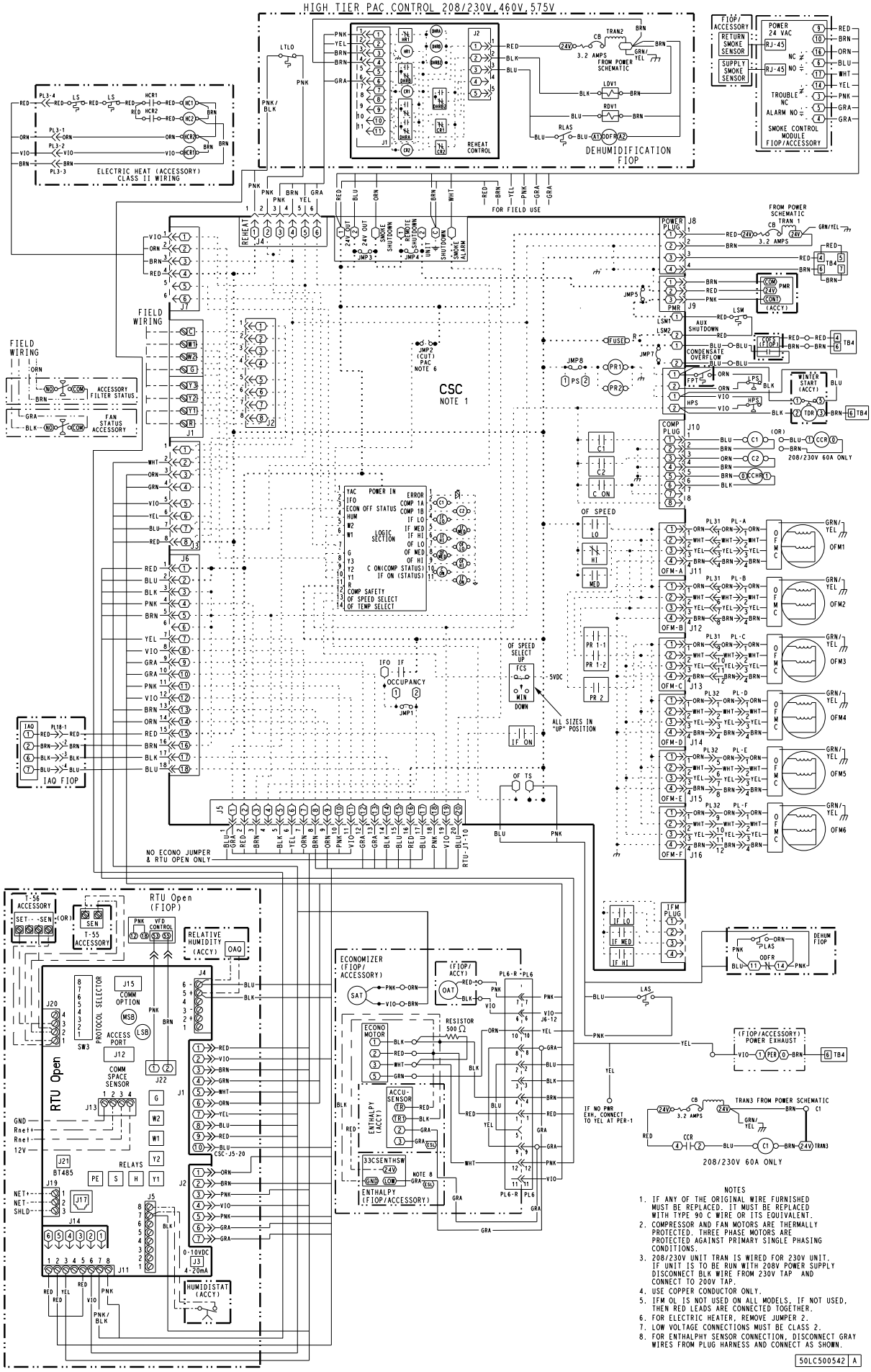

Fig. 2 - Typical Factory Option Wiring

Resistive Non-Communicating Sensor Wiring

For sensor with setpoint adjustment up to 500 ft (152m), use three-conductor shielded cable 20 gauge wire to connect the sensor to the controller. For non set point adjustment (slidebar) or return air duct sensor, an unshielded, 18 or 20 gauge, two-conductor, twisted pair cable may be used. Below is the list of the connections of the SPT to the RTU Open, refer to Fig. 3 and 4 for typical connections at the sensor.

- J20-1 = temperature sensor input (SEN)
- J20-2 = sensor common
- J20-3 = Setpoint adjustment input (SET)

NOTE: See Fig. 5 for space temperature sensor averaging. T55/56 Override button will no longer function when sensors are averaged. Only Sensor 1 T56 STO input can be used.

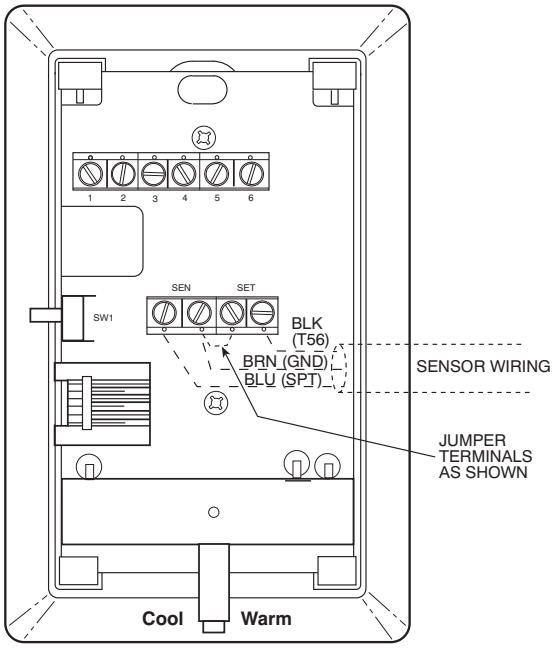

C07131

Fig. 3 - Space Temperature Sensor Typical Wiring (33ZCT56SPT)

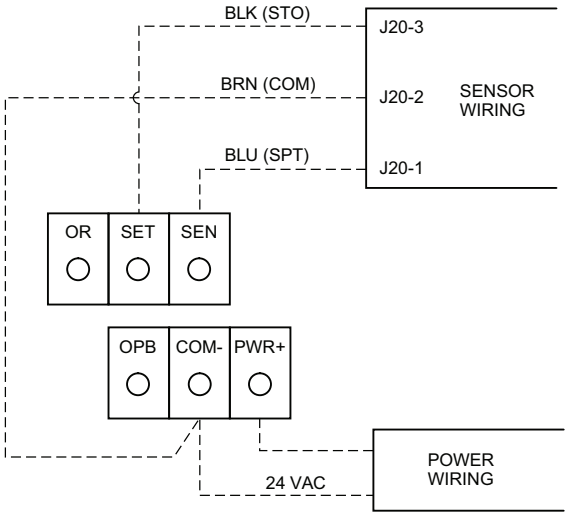

NOTE: Must use a separate isolated transformer.

C10291

Fig. 4 - Space Temperature Sensor Typical Wiring (33ZCT59SPT)

Rnet Communicating Sensor Wiring

The Rnet bus allows local communication with the RTU Open, including communicating sensors. The Rnet bus can hold up to 6 devices in the following combinations wired in daisy-chain or hybrid configuration:

- 1-4 SPS sensor(s)
- 1 SPPL, SPP, or SPPF sensor
- 1-4 SPS sensor(s), and 1 SPPL, SPP, or SPPF sensor
- Any of the above combinations, plus up to 2 BACview[6]s

NOTE: Additional SPS sensors and BACview[6] must be addressed. Use the jumpers on the SPS sensor's circuit board and refer to the BACview[6]'s installation instructions for addressing.

For Rnet wiring up to 500ft (152m), use 18 AWG 4 conductor unshielded plenum rated cable. The RTU Open's J13-RNET connection has a 4 pin Phoenix connector wired as described below, Fig. 6 shows sensor Rnet wiring.

- RNET - 1 = Signal ground (GND)
- RNET - 2 = Signal (Rnet+)
- RNET - 3 = Signal (Rnet-)
- RNET - 4 = Power (+12v)

CO_2 Sensor(s) (IAQ and OAQ)

The indoor air quality (IAQ) and outdoor air quality (OAQ) sensors monitor carbon dioxide (CO_2) levels. This information is used to monitor the quality of air in terms of parts per million (PPM). The same sensor is used for inside, outside, and duct monitoring, except an aspirator box is required for outside and duct mounting. The CO_2 sensor is preset for a range of 0 to 2000 ppm and a linear mA output of 4 to 20. The rooftop unit may have a factory installed CO_2 sensor on the side of the economizer assembly in the return air section of the unit and is pre-wired and pre-configured at the factory. For field installed sensors, a field supplied transformer must be used to power the sensor. Refer to the instructions supplied with the CO_2 sensor for electrical requirements and terminal locations. RTU Open configurations must be changed after adding a CO_2 sensor. See below and Fig. 7 for typical CO_2 sensor wiring.

- J4-2 or J4-5 = 4-20mA signal input
- J4-3 or J4-6 = signal common

NOTE: The factory used J4-2&3 for CO_2 (IAQ) sensor inputs.

Combination Temperature and CO_2 Sensor

If using a combination temperature and CO_2 sensor (33ZCT55CO2 or 33ZCT56CO2-02), refer to the installation instructions provided with the sensor.

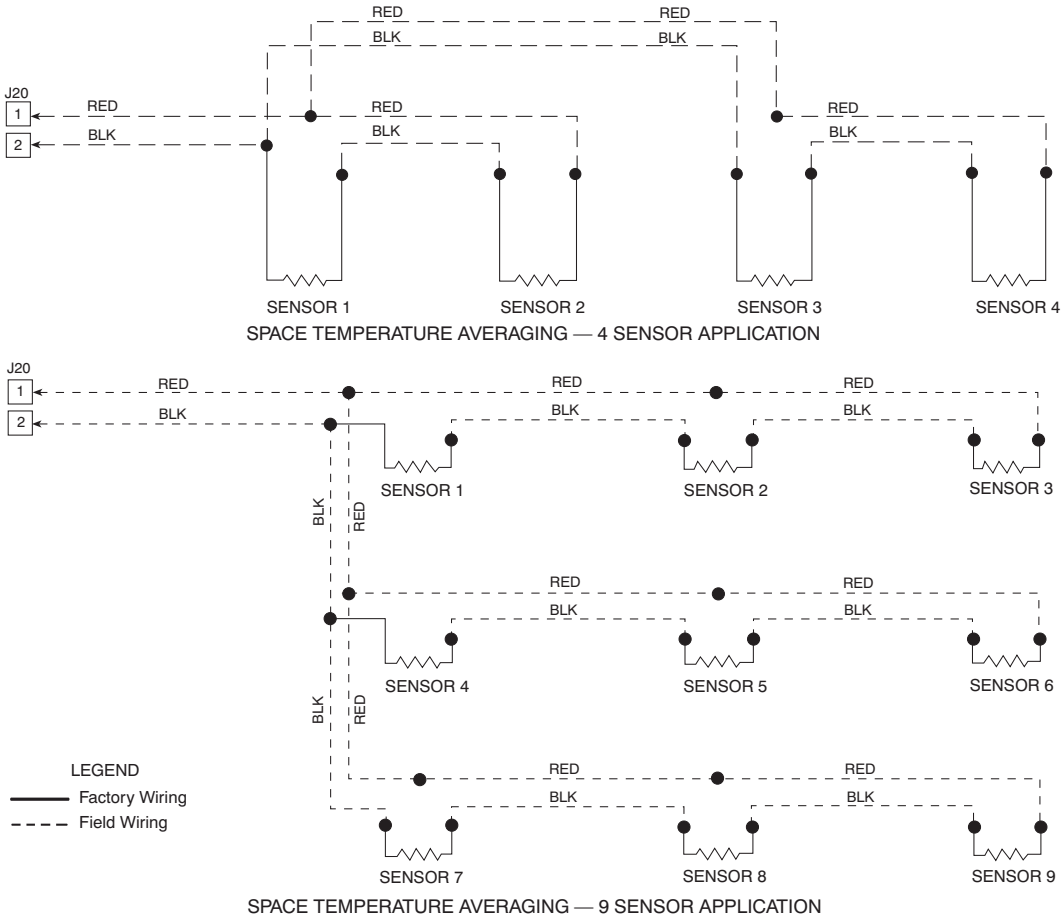

Fig. 5 - Space Temperature Averaging

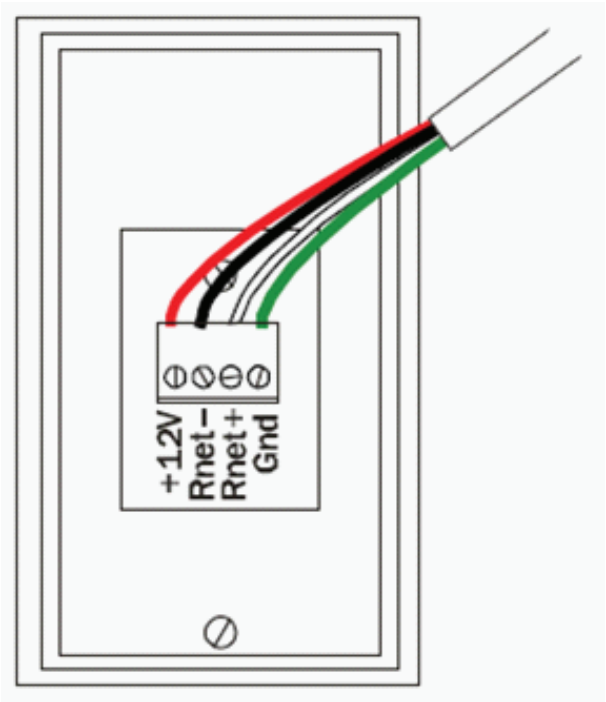

Fig. 6 - Typical Rnet Communication Sensor Wiring

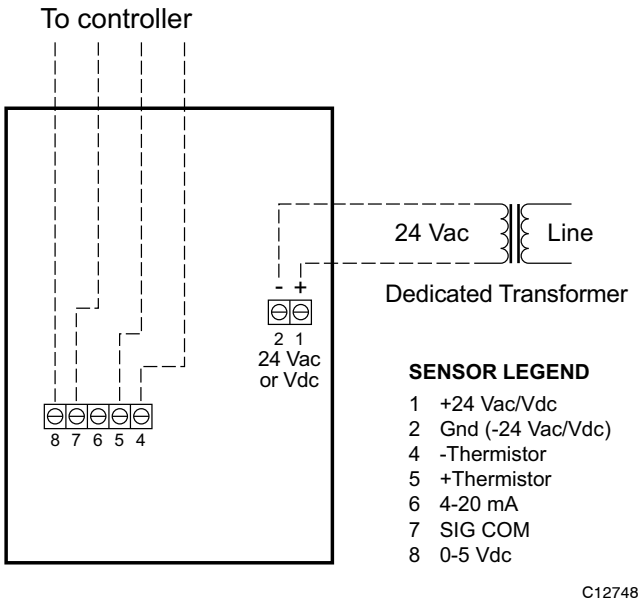

Fig. 7 - Indoor/Outdoor Air Quality (CO_2) Sensor (33ZCSPTCO2-01 or 33ZCSPTCO2LCD-01) Typical Wiring Diagram

Relative Humidity Sensors (Space or Duct Mounted)

The accessory space humidity sensor or duct humidity sensor is used to measure the relative humidity of the air within the space or return air duct. The RH reading is used to control the Humidi-MiZer® option of the rooftop unit. For wiring distances up to 500 ft (152m), use a 3-conductor, 18 or 20 AWG shielded cable. The shield must be removed from the sensor end of the cable and grounded at the unit end. The current loop power for the sensor is provided by the RTU Open controller as 24vdc. Refer to the instructions supplied with the RH sensor for electrical requirements and terminal locations. RTU Open configurations must be changed after adding a RH sensor. See below and Fig. 8 and 9 for typical RH sensor wiring.

- J4-1 or J4-4 = 24vdc loop power
- J4-2 or J4-5 = 4-20mA signal input

NOTE: The factory default for dehumidification control is a normally open humidistat.

Installing Discrete Inputs

Compressor Safety

The compressor safety input provides the RTU Open with feedback to when the compressor is not running and should be. This feedback is usually provided by a Compressor Lock-Out (CLO) device. Compressor safety is a dedicated input on the configurable input 3 and tells the RTU Open when the compressor is locked out. The normal condition for compressor safety is good operation. A normally open compressor safety is the factory default for all units. Follow specific accessory instructions if installing a CLO device. The CLO should wire into the unit's Integrated Staging Control (ISG) board.

NOTE: Input 3 can also be wired into J-5.

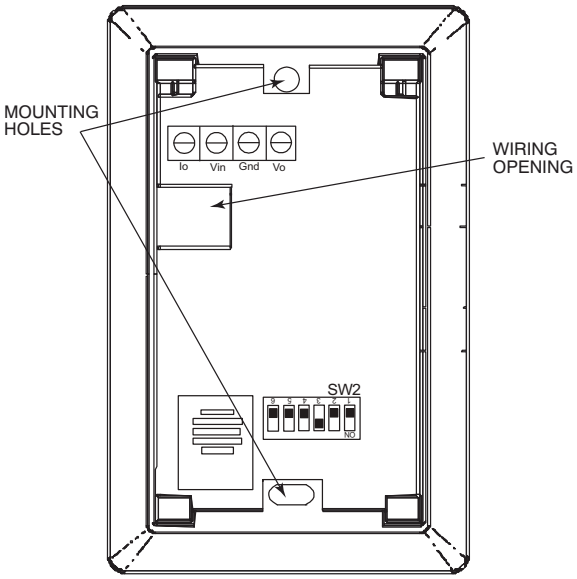

Fig. 8 - Space Relative Humidity Sensor Typical Wiring

Humidistat

The accessory humidistat provides the RTU Open insight to the relative humidity in the space. The humidistat reads the RH level in the space and compares it to its setpoint to operate a dry contact. The humidistat is a dedicated input on the configurable input 9 and tells the RTU Open when the RH level is HIGH or LOW. The normal condition for humidity is LOW. A normally open humidistat is the factory default control for the Humidi-MiZer option. To wire in the field:

- J5-8 = 24 VAC source for dry contact
- J5-7 = Signal input

Single Enthalpy (Outdoor Enthalpy)

The outdoor enthalpy switch/receiver (33CSENTHSW) senses temperature and humidity of the air surrounding the device and calculates the enthalpy when used without an enthalpy sensor. The relay is energized when enthalpy is high (above 28 BTU/lb OR dry bulb temperature is above 75°F) and de-energized when enthalpy is low (below 27 BTU/lb AND dry bulb temperature is below 74.5°F). The enthalpy input is dedicated to input 8 and tells the RTU Open when the outside air enthalpy is HIGH or LOW. The normal condition for the enthalpy input is HIGH. Enthalpy is configured on input 8 in the factory when it is added as an option.

NOTE: The enthalpy calculation is done using an average altitude of 1000 ft above sea level.

For field installation, refer to the enthalpy accessory instructions. For wiring see below and Fig. 10. The RTU Open board provides 24vac on one of the two loose grey wires in the return air section of the rooftop near the 12-pin economizer plug. To determine the correct grey, measure the voltage on the wires with power applied to the unit. If 24-vac is sensed, then that is the grey wire that is connected to the RTU Open board at J2-7. The other is the signal for input 8, connect it to the LOW Enthalpy terminal on the enthalpy switch/receiver. Tie into the 12-pin economizer plug on pin 4 or the black wire connected to the actuator for the enthalpy's GND connection. Power can also be provided direct from the unit transformer and J5 terminal on the RTU Open.

- J2-7 or J5-2 = 24 VAC for enthalpy switch power
- J2-6 or J5-1 = input signal

Differential Enthalpy

Differential enthalpy control requires both an enthalpy switch/receiver (33CSENTHSW) and an enthalpy sensor (33CSENTSEN). The enthalpy sensor must be installed in the field as the factory can only provide single enthalpy. The enthalpy sensor must be mounted in the return airstream and calculates the enthalpy of the indoor air. The relay is energized when the enthalpy detected by the return air enthalpy sensor is less than the enthalpy at the enthalpy switch/receiver. The relay is de-energized when the enthalpy detected by the return air enthalpy sensor is greater than the enthalpy at the enthalpy switch/receiver (differential enthalpy control).

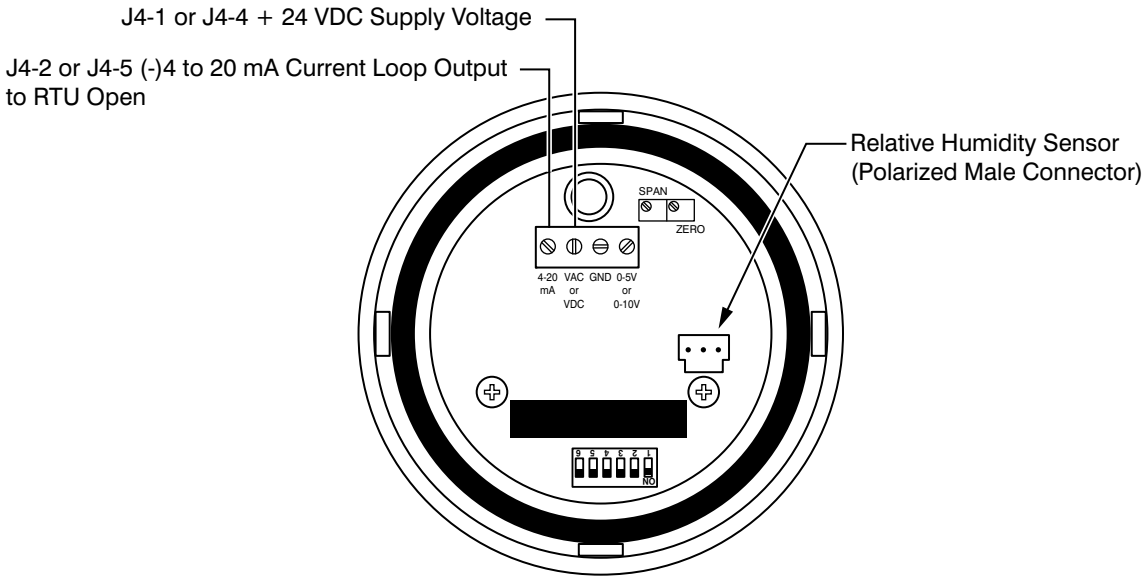

Fig. 9 - Duct Relative Humidity Sensor Typical Wiring

To wire return air enthalpy sensor:
Connect the 4-20 mA In terminal on the enthalpy switch/receiver to the 4-20 mA Out terminal on the return air enthalpy sensor. Connect the 24-36 VDC Out terminal on the enthalpy switch/receiver to the 24-36 VDC In terminal on the return air enthalpy sensor. (See Fig 10.)

Fire Shutdown

The fire shutdown input is provided for unit shutdown in response to a fire alarm or smoke detector. The fire shutdown input is dedicated to input 5 and tells the RTU Open when to shutdown due to smoke detection or fire alarm system. The normal condition for fire shutdown is there is no fire alarm. The unit may have factory installed smoke detector(s); refer to the base unit installation instructions for details on any adjustments required during unit installation. Fire shutdown is always factory configured for a normally open smoke detector.

For field installation of a smoke detector see instructions for that specific accessory. See below and the troubleshooting section for wiring at the unit's Integrated Staging Control (ISC) board.

- ISC - UNIT SHUTDOWN - 24v OUT = 24 VAC source
- ISC - UNIT SHUTDOWN - Smoke Alarm = Signal input to RTU Open

NOTE: Input 5 can also be wired into J5-3.

Filter Status

The filter status accessory is a field-installed accessory. This accessory detects plugged filters. When installing this accessory, the unit must have a free input (input 3, 5, 8, or 9). One of the dedicated functions (Humidistat, Fire shutdown, Enthalpy, or Compressor safety) must not be in use to configure Filter Status. Refer to the configuration section for details on configuring inputs for specific functions and state. Refer to Fig. 1 for wire terminations at J5.

Fan Status

The fan status accessory is a field-installed accessory. This accessory detects when the indoor fan is moving air. When installing this accessory, the unit must have a free input (input 3, 5, 8, or 9). One of the dedicated functions (Humidistat, Fire shutdown, Enthalpy, or Compressor safety) must not be in use to configure Fan Status. Refer to the configuration section for details on configuring inputs for specific functions and state. Refer to Fig. 1 for wire terminations at J5.

Remote Occupancy

The remote occupancy accessory is a field-installed accessory. This accessory provides an input to change the units occupancy status. When installing this accessory, the unit must have a free input (input 3, 5, 8, or 9). One of the dedicated functions (Humidistat, Fire shutdown, Enthalpy, or Compressor safety) must not be in use to configure remote occupancy. Refer to the configuration section for details on configuring inputs for specific functions and state. Refer to Fig. 1 for wire terminations at J5.

IGC Override

The IGC Override input is factory-installed for some units with gas heat. This input provides an indication that the gas valve is stuck open and the heat is still operating after any call for heating has been dropped. This function requires the use of input 9. Any of the other dedicated functions (Humidistat, Fan Status, Filter Status, Remote Occupancy, or Door Contact) will not be in use if IGC Override is configured. Refer to the configuration section for details on configuring inputs for specific functions and state. Refer to Fig. 2 for wire terminations.

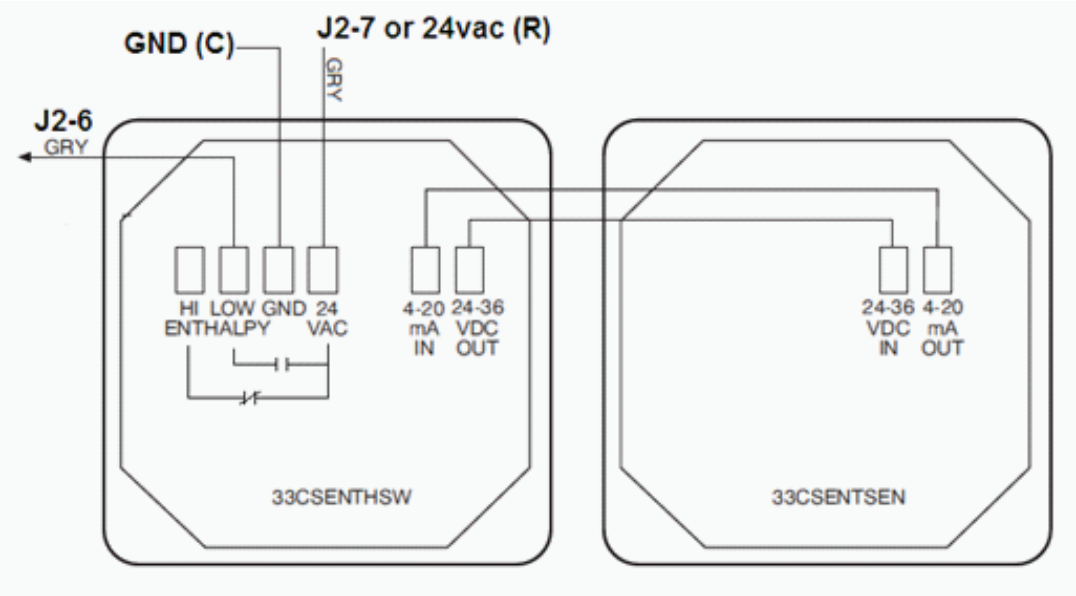

C10821

Fig. 10 - Enthalpy Switch and Sensor Wiring

Communication Wiring-Protocols

General

Protocols are the communication languages spoken by control devices. The main purpose of a protocol is to communicate information in the most efficient method possible. Different protocols exist to provide different kinds of information for different applications. In the BAS application, many different protocols are used, depending on manufacturer. Protocols do not change the function of a controller; just make the front end user different.

The RTU Open can be set to communicate on four different protocols: BACnet, Modbus, N2, and LonWorks. Switch 3 (SW3) on the board is used to set protocol and baud rate. Switches 1 and 2 (SW1 and SW2) are used to set the board's network address. See Fig. 11 and 12 for protocol switch settings and address switches. The 3rd party connection to the RTU Open is through plug J19. See Fig. 13 for wiring. Refer to the *RTU Open v2 Integration Guide* for more detailed information on protocols, 3rd party wiring, and networking.

NOTE: Power must be cycled after changing the SW1-3 switch settings.

i-Vu® Open

i-Vu Open is a Carrier front-end and Building Automation System (BAS). It is a web based network system that uses a native BACnet over MS/TP communication protocol. The speed of the network can range from 9600 to 76,800 baud. Open devices communicate with a proprietary language called Linkage on i-Vu Open. Linkage is established automatically and allows the flow of specific data across Open devices. Refer to i-Vu Open literature for more information on i-Vu.

BACnet® MS/TP

BACnet Master Slave/Token Passing (MS/TP) is used for communicating BACnet over a sub-network of BACnet-only controllers. This is the default Carrier communications protocol. Each RTU Open module acts as an MS/TP Master. The speed of an MS/TP network can range from 9600 to 76.8K baud. Physical Addresses can be set from 01 to 99.

SW3 Protocol Selection

PROTOCOL	DS8	DS7	DS6	DS5	DS4	DS3	DS2	DS1
BACnet MS/TP (Master)	Unused	OFF	OFF	OFF	ON	OFF	Select Baud	Select Baud
Modbus (Slave)	Unused	OFF	OFF	ON	ON	OFF	Select Baud	Select Baud
N2 (Slave)	Unused	OFF	OFF	OFF	ON	ON	OFF	OFF
LonWorks	Unused	ON	ON	OFF	ON	OFF	OFF	ON

NOTE:
DS = Dip Switch
BACnet MS/TP SW3 example shown

Baud Rate Selections

BAUD RATE	DS2	DS1
9600	OFF	OFF
19,200	ON	OFF
38,400	OFF	ON
76,800	ON	ON

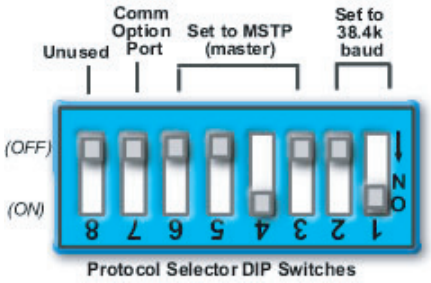

C07166

Fig. 11 - RTU Open SW3 Dip Switch Settings

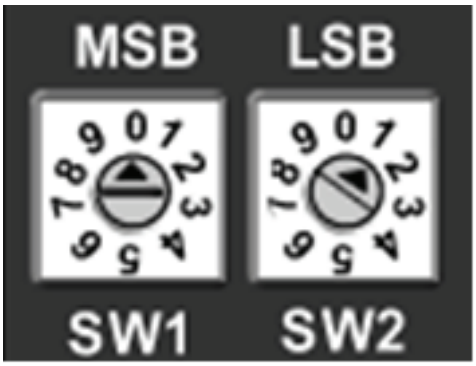

C10815

Fig. 12 - RTU Open Address Switches

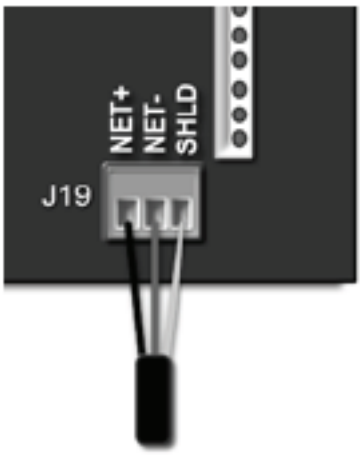

C10816

Fig. 13 - Network Wiring

Modbus

The RTU Open module can speak the Modicon Modbus RTU Protocol as described in the Modicon Modbus Protocol Reference Guide, PI--MBUS--300 Rev. J. The speed of a Modbus network can range from 9600 to 76.8K baud. Physical Addresses can be set from 01 to 99.

Johnson N2

N2 is not a standard protocol, but one that was created by Johnson Controls, Inc. that has been made open and available to the public. The speed of N2 network is limited to only 9600 baud. Physical Addresses can be set from 01 to 99.

LonWorks

LonWorks is an open protocol that requires the use of Echelon's Neuron microprocessor to encode and decode the LonWorks packets. In order to reduce the cost of adding that hardware on every module, a separate LonWorks Option Card (LON-OC) was designed to connect to the RTU Open.

This accessory card is needed for LonWorks and has to be ordered and connected using the ribbon cable to plug J15. The RTU Open's baud rate must be set to 38.4k to communicate with the LON-OC. The address switches (SW1 & SW2) are not used with LonWorks.

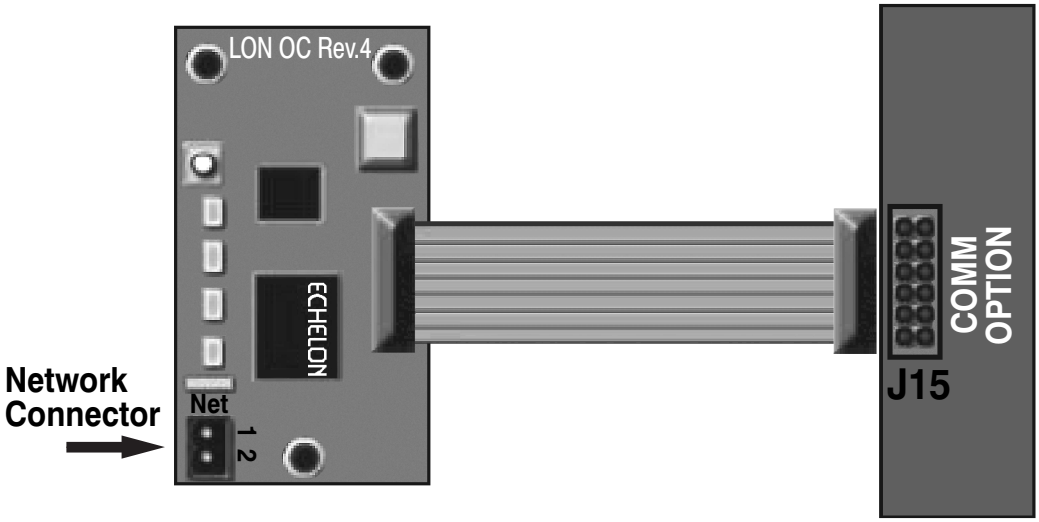

C12750

Fig. 14 - LON-OC and LON Network Wiring

Local Access

BACview[6] Handheld

The BACview[6] is a keypad/display interface used to connect to the RTU Open to access the control information, read sensor values, and test the RTU. (See Fig. 15.) This is an accessory interface that does not come with the RTU Open controller. You connect the BACview[6] to the RTU Open's J12 local access port or one of the communicating space sensor's access port. There are 2 password protected levels in the display (User and Admin). The user password is defaulted to 0000, but can be changed. The Admin password is 1111 and cannot be changed. There is a 10 minute auto logout if a screen is left idle. See Appendix A for navigation and screen content.

Virtual BACview

Virtual BACview is a freeware computer program that functions as the BACview[6] Handheld. The USB Link interface (USB-L) is required to connect a computer to the RTU Open board. The link cable connects a USB port to the J12 local access port. This program functions and operates identical to the handheld.

Field Assistant

Field Assistant is a computer program included with the purchase of the USB Link Tech Kit (USB-TKIT). This is a field Tech Tool to set-up, service, or download the RTU Open controller. The link cable connects a USB port to the J12 local access port. The menu structure is similar to the BACview, but accessed and functions the same as i-Vu.

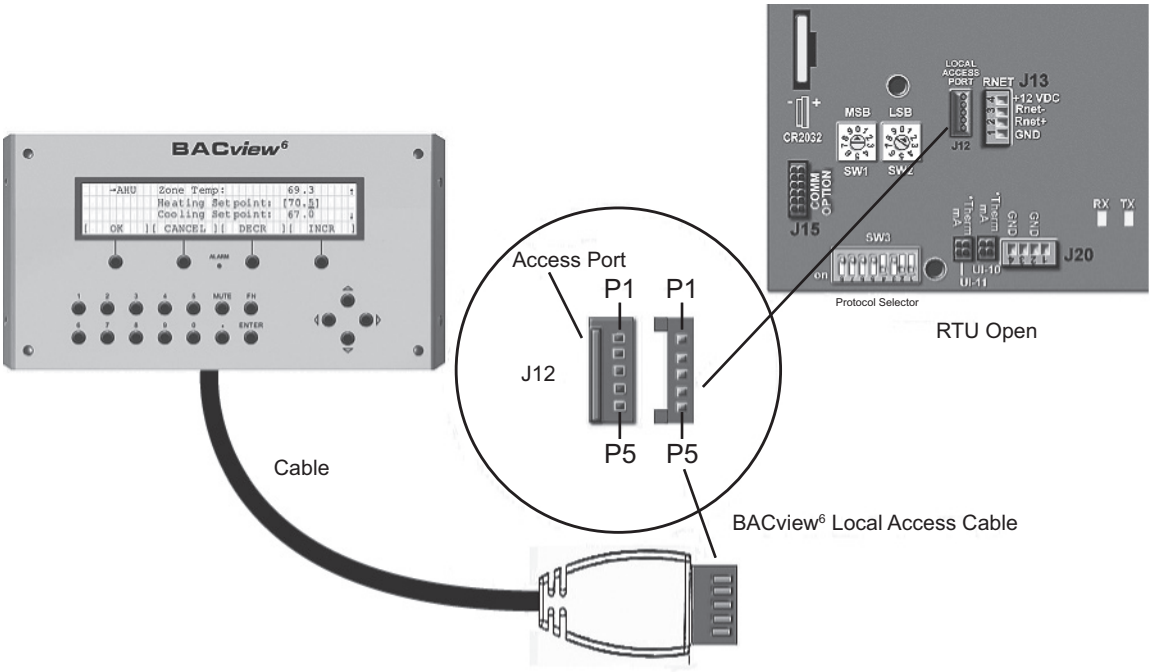

C12749

Fig. 15 - BACview[6] Handheld Connections

START-UP

IMPORTANT: Follow the base unit's start-up sequence documented in its specific instructions. Use the base unit's start-up check list when performing the start-up. At the end of this manual there is an additional RTU Open Start-up Sheet to be completed and included with the base unit check list.

Besides the base unit start-up, there are a few steps to take to properly start-up the controls. RTU Open's Service Test function should be used to assist in the base unit start-up and also allows verification of output operation. Controller configuration is also part of start-up. This is especially important when field accessories have been added to the unit. The factory pre-configures options installed at the factory. There may also be additional installation steps or inspection required during the start-up process.

Additional Installation/Inspection

Inspect the field installed accessories for proper installation, making note of which ones do or do not require configuration changes. Inspect the RTU Open's Alarms for initial insight to any potential issues. See troubleshooting section for alarms. Inspect the SAT sensor for relocation as intended during installation. Inspect special wiring as directed below.

Humidi-MiZer™ Control Wiring

In units equipped with the optional Humidi-MiZer option there are 2 loose wires (one pink and one pink/black) in the control box used to control the dehumidification function of the unit. These wires are meant to be ties to a space humidistat or thermidistat on an electromechanical unit. On RTU Open equipped units these wires must be connected to J11-7 & 8 to allow the Open board to operate the dehumidification function or the unit. Disconnect the J11 Phoenix style connector form the board and use the plug screws to secure the pink/black wire in pin 7 and and the pink wire in pin 8, reconnect the plug to the board at J11.

Power Exhaust Relay Power

The relay used by the RTU Open board to control power exhaust is a dry contact which means it does not have 24vac. This 24vac must be connected to the relay to allow it operate the power exhaust relay in the PE accessory. A 24vac source should be provided to the J11-2 pin on the RTU Open. This can be provided by the unit's transformer from various sources. The "R" terminal on the unit's Integrated Staging Control (ISC) board is a logical source.

Service Test

The Service Test function can be used to verify proper operation of compressors, heating stages, indoor fan, power exhaust fans, economizer, and dehumidification. Use of Service Test is recommended at initial system start up and during troubleshooting. See Appendix A for Service Test Mode table.

Service Test mode has the following changes from normal operation:

- Outdoor air temperature limits for cooling circuits, economizer, and heating are ignored.
- Normal compressor time guards and other staging delays are ignored.
- The status of Alarms (except Fire and Safety chain) is ignored, but all alerts and alarms are still broadcasted on the network.

Service Test can be turned ON/OFF at the unit display or from the network. Once turned ON, other entries may be made with the display or through the network. To turn Service Test on, change the value of Test Mode to ON, to turn Service Test off, change the value of Test Mode to OFF.

NOTE: Service Test mode is password protected when accessing from the display. Depending on the unit model, factory-installed options, and field-installed accessories, some of the Service Test functions may not apply.

Fan Test

This point allows the board's fan output to be manually turned On (Enable) and Off (Disable). Other test points that require the fan for operation will automatically turn the fan on and this point will still show "Disable." Fan test can operate simultaneously with other Service Test Points. For units equipped with variable speed fans, the fan test will operate the unit's fan at minimum VFD output speed.

High Speed Fan Test

Use the High Speed Fan Test to activate and deactivate the Supply Fan (BO-1) output.

Compressor 1 and Compressor 2 Test

The compressor test points are used to change output status for the individual compressors. Compressor starts are not staggered. The fan and heating service test outputs are reset to "Disable" for the compressor service tests. The Indoor fan and outdoor fans are controlled normally to maintain proper unit operation. All normal cooling alarms and alerts are functional.

NOTE: For the LC WeatherExpert size 07-26 units, each compressor stage can be operated independently.

Heat 1 and Heat 2 Test

The heat test points are used to change output status for the individual heat stages, gas or electric. The fans and cooling service test outputs are reset to "Disable" for the heat service tests. Indoor and outdoor fans are controlled normally to maintain proper unit operation. All normal heating alarms and alerts are functional.

Dehumidification Test

For units with the factory Reheat option, the dehumidification relay is used to change the output status to operate the circuits in different Reheat modes. Dehumidification relay on by itself puts all circuits running in Hot Gas Reheat dehumidification mode; dehumidification relay on and the cooling test (compressor test relays) on puts unit and or individual circuits in subcooling dehumidification mode. The fans and heating service test outputs are reset to "Disable" for the dehumidification service test. Indoor and outdoor fans are controlled normally to maintain proper unit operation. All normal cooling/dehum alarms and alerts are functional.

Power Exhaust Test

This point allows the board's power exhaust (PE) output to be manually turned On (Enable) and Off (Disable). Power Exhaust test can operate simultaneously with other Service Test Points.

Economizer Test

This point allows the board's economizer output to be manually controlled from 0 to 100 % Open. Economizer test can operate simultaneously with other Service Test Points.

VFD Speed Test

This point activates the board's 0-10vdc analog output that controls the unit's supply fan VFD speed.

NOTE: This output is only applicable if Fan Control is set to Variable Speed.

NOTE: Service Test Mode does not timeout. Be sure to turn off test mode or cycle power to the RTU to return to normal operation.

Configuration

The RTU Open controller's configuration points effect the unit's inputs and operation. Review and understand the meaning and purpose of each configuration point before changing it from the factory default value. Use the RTU Open Start-up Sheet during configuration; fill in changed values if changed from factory default. There are three main configurations menus: SETPOINT, UNIT, and SERVICE. Each configuration point is described below under its according menu. See Appendix A for BACview menu structure.

Setpoint

Occupied Heating Setpoint - The heating setpoint the controller maintains during the occupied period.

Range = 40-90°F Default = 70°F

Occupied Cooling Setpoint – The cooling setpoint the controller maintains during the occupied period.

Range = 55-99°F Default = 76°F

Unoccupied Heating Setpoint – The heating setpoint the controller maintains during the unoccupied period.

Range = 40-90°F Default = 55°F

Unoccupied Cooling Setpoint – The cooling setpoint the controller maintains during the unoccupied period.

Range = 45-99°F Default = 90°F

Effective Heating Setpoint – The current setpoint value heating operation will control to.

Range = 0-120°F

Effective Cooling Setpoint – The current setpoint value cooling operation will control to.

Range = 0-120°F

Optimal Start - The earliest time prior to occupancy, at which the Optimal Start function may begin to adjust the effective setpoints. Setting this to 0 will disable optimal start.

Range = 0-4 hours Default = 1 hour

Occ Relative Humidity Setpoint – The space RH setpoint the controller maintains during the occupied period.

Range = 0 to the Unocc RH setpoint
Default 60%

Unocc Relative Humidity Setpoint – The space RH setpoint the controller will maintain during the unoccupied period.

Range = 30-100% Default = 95%

DCV Max Ctrl Setpoint – The difference between indoor and outdoor CO_2 level which results in maximum ventilation damper position.

Range = 0-9999ppm Default = 650ppm

Power Exhaust Setpoint – Used to determine when the power exhaust operation will begin. This setpoint is based on the maximum fan speed. When the economizer position opens above this point, power exhaust operation will begin and when the damper position falls 5% below this point, the power exhaust will shutdown.

Range = 20-90% Default = 50%

NOTE: This setpoint is automatically adjusted if the Fan Type is set to Variable Speed or 2-Speed in order to maintain proper building pressure. The actual calculated value, Calculated PE Setpoint, is shown in MAINTENANCE.

NOTE: This point is only used when Continuous Occupied Exhaust = NO

Unit

Fan Mode – Sets the operation of the indoor fan when not in cooling or heating mode. Refer to fan operation for details on each operation.

Range = Auto, Continuous, or Always On
Default = Continuous

Power Fail Restart Delay - Sets how long the controller delays normal operation after the power is restored. Typically used to prevent excessive demand when recovering from a power failure

Range = 0-30 sec Default = 5 sec

Fan Off Delay – Time delay in which the fan will continue run after being commanded off.

Range = 10-300sec Default = 30sec

Minimum Cooling SAT – The supply air temperature must remain above this value to allow cooling with the economizer and/or compressors. There is 5°F plus and minus deadband to this point. If the SAT falls below this value during cooling a compressor stage will be removed and/or the economizer will return to minimum position.

Range = 45-75°F Default = 50°F

Maximum Heating SAT – The supply air temperature must remain below this value to allow heating. There is 5°F plus and minus deadband to this point. If the SAT falls below this value during heating the heat stages will begin to decrease until the SAT has dropped below this value.

Range = 85-150°F Default = 120°F

Vent Dmpr Pos / DCV Min Pos – Minimum damper position for ventilation during the occupied period when the fan is operating at full speed.

Range = 0-100% open Default = 20% open

Economizer Purge Min Pos – The damper position used during the Pre-Occupancy Purge cycle prior to occupancy when Pre-Occupancy purge is active

Range = 0-100% open Default = 40% open

Low Fan Econ Min Pos – The minimum damper position used for ventilation during the occupied period when the fan is operating at it's lowest speed.

Range = 0-100% open Default = 33% open

NOTE: This setpoint is only applicable if the Fan Type is set to Variable Speed or 2-Speed.

DCV Max Vent Damper Pos – This is the greatest position the economizer can open to while trying to control the indoor air quality levels

Range = 0-75% open Default = 50% open

S Fan Service Alarm Timer – The timer set for the Supply Fan Runtime Alarm. After the number of hours set on this point is exceeded the corresponding alarm will be generated, and must be manually cleared in the maintenance menu after the maintenance has been completed. The timer will then begin counting its runtime again for the next due maintenance.

Range = 0 to 9999 hr Default = 600 hr

NOTE: If set to 0 hr this setpoint is disabled and its alarm will never be generated.

Comp 1 Service Alarm Timer – The timer set for the Compressor 1 Runtime Alarm. After the number of hours set on this point is exceeded the corresponding alarm will be generated, and must be manually cleared in the maintenance menu after the maintenance has been completed. The timer will then begin counting its runtime again for the next due maintenance.

Range = 0 to 9999 hr Default = 0 hr

NOTE: Default = 0 hours, if set = 0 hr this point is disabled and its alarm will never be generated.

Comp 2 Service Alarm Timer – The timer set for the Compressor 2 Runtime Alarm. After the number of hours set on this point is exceeded the corresponding alarm will be generated, and must be manually cleared in the maintenance menu after the maintenance has been completed. The timer will then begin counting its runtime again for the next due maintenance.

Range = 0 to 9999 hr Default = 0 hr

NOTE: Default = 0 hours, if set = 0 hr this point is disabled and its alarm will never be generated.

Filter Service Alarm Timer – The timer set for the Dirty Filter Alarm. After the number of hours set on this point is exceeded the corresponding alarm will be generated, and must be manually cleared in the maintenance menu after the maintenance has been completed. The timer will then begin counting its runtime again for the next due maintenance.

Range = 0 to 9999 hr Default = 600 hr

NOTE: Default = 600 hours, if set = 0 hr this point is disabled and its alarm will never be generated.

Pushbutton Override – Set to enable or disable the push-button override function of the locally installed space sensor.

Range = Disable/Enable Default = Enable

Setpoint Adjustment – Set to enable or disable the setpoint adjustment function of the locally installed space sensor.

Range = Disable/Enable Default = Enable

Setpoint Adjustment Range - Sets the slider range of a space sensor (with built in function). The slider is used to offset the control setpoint

Range = 0 to 5°F Default = 5°F

Cooling Lockout Temperature - This defines the minimum outdoor air temperature that cooling mode can be enabled and run. If the OAT falls below this number during cooling the compressors will be de-energized

Range = 0-80°F Default = 45°F

Economizer High OAT Lockout Temp – If the outdoor air temperature rises above this value, economizer cooling will be disabled and dampers will return and stay at minimum position.

Range = 55-80°F Default = 75°F

Heating Lockout Temperature – This defines the maximum outdoor air temperature that heating mode can be enabled and run. If the OAT rises above this number during heating the heat stages will be de-energized.

Range = n/a Default = 65°F

Pre-Occupancy Purge - Enables or disables the use of a purge cycle immediately prior to the start of a scheduled occupied period.

Range = Enable/Disable Default = Disable

Purge Time - The maximum amount of time used for a pre-occupancy purge.

Range = 0 to 240 minutes Default = 60 minutes

Unocc Free Cool Enable – Set to enable or disable the economizer for night time free cooling (NTFC) operation.

Range = Disable/Enable Default = Disable

Setpoint Separation – Sets the minimum separation gap in which setpoints can be set.

Range = 2-10°F Default = 5°F

Occupancy Source – Tells the controller which method of occupancy control to use in determining occupancy of the rooftop. Refer to Occupancy in the operation section for detail on each specific operation function.

Range = Always Occupied, BACnet Schedule, BAS On/Off, or Remote Occ Input

Default =Always occupied

Inputs

Input 1 Function – This input is an analog input and can be configured to be one of four different inputs: No Sensor, IAQ Sensor, OAQ Sensor, or Space RH Sensor. Input 1 is wired to pin J4-4,5,6.

Default = No Sensor

Input 2 Function – This input is an analog input and can be configured to be one of four different inputs: No Sensor, IAQ Sensor, OAQ Sensor, or Space RH Sensor. Input 2 is wired to pin J4-1,2,3.

Software Default = No Sensor

Factory Default = IAQ Sensor with factory installed CO_2 sensor

NOTE: For Inputs 1 & 2, if using Carrier air quality sensors do not use 24Vdc from RTU Open board. External 24Vdc power supply required.

Input 3 - This input is a discrete input and can be configured to be one of six different functions: No Function, Compressor Safety, Fan Status, Filter Status, Remote Occupancy, or Door Contact. This input can also be configured to be either a Normally Open (N/O) or a Normally Closed (N/C) switch. Input 3 is factory wired to pin J1-2. Field accessories can be wired to its parallel pin J5-5.

Factory Default = Compressor Safety and N/O

Input 5 - This input is a discrete input and can be configured to be one of six different functions: No Function, Fire Shutdown, Fan Status, Filter Status, Remote Occupancy, or Door Contact. This input can also be configured to be either a Normally Open (N/O) or a Normally Closed (N/C) switch. Input 5 is factory wired to pin J1-10. Field accessories can be wired to its parallel pin J5-3.

Software Default = Fire Shutdown and N/C

Factory Default = Fire Shutdown and N/O

Input 8 - This input is a discrete input and can be configured to be one of six different functions: No Function, Enthalpy Switch, Fan Status, Filter Status, Remote Occupancy, or Door Contact. This input can also be configured to be either a Normally Open (N/O) or a Normally Closed (N/C) switch. Input 8 is factory wired to pin J2-6. Field accessories can be wired to its parallel pin J5-1.

Software Default= Enthalpy Switch and N/O
Factory Default = No Function and N/O without factory installed enthalpy sensor

Input 9 - This input is a discrete input and can be configured to be one of seven different functions: No Function, Humidistat, Fan Status, Filter Status, Remote Occupancy, Door Contact, or IGC Override. This input can also be configured to be either a Normally Open (N/O) or a Normally Closed (N/C) switch. Input 9 is factory and field wired to pin J5-7.
Factory Default = Humidistat and N/O

NOTE: For 48LC 07-26 Units (gas heat units) this decision is automatically set to IGC Override and is factory wired.

Space Sensor Type – This tells the controller what type of space sensor is installed to run the unit. The three types that can be used are: a standard 10k Type II thermistor (T55), sensor with a setpoint offset slider bar (T56), or a communicating sensor (SPT Sensor).

Range = T55, T56 (Use for T59), or SPT Sensor
Default = T55

T5x Override Duration – Sets the override time duration the unit will change from unoccupied to occupied when the override button is pushed on the space sensor.

Range = 0-24 hours Default = 1 hour

Service

Unit Type – This tells the control what type of unit it is controlling. Heat/Cool refers to gas and electric heat units. LC WeatherExpert refers to a special 3 stage/2 compressor unit. HP O/B Ctrl refers to a heat pump unit which requires reversing valve control. HP Y1/W1 Ctrl refers to a heat pump unit whose reversing valve is built in to the cooling or heating call. This decision is factory configured for the specific unit type as supplied.

Compressor Stages – This refers to the number of mechanical cooling stages available on a specific unit. For LC size 07-26 units this setting is “Three Stage”, or set to “None” if economizer cooling ONLY is desired.

Factory Default = “Three Stage” for LC size 07-26 units

Economizer Exists – This indicates if there is an economizer installed on the unit.

Factory Default = NO if no economizer, or YES if there is an economizer installed

Fan Control - The type of fan control used on the unit.

Range = Single Speed, Two Speed, or Variable Speed
Default = Single Speed, or Two Speed for units with the two speed fan option

Heat Type – Indicates the type of heat which is installed in the unit. Electric is any unit without gas and a Gas unit is one which requires gas input for heating.

Factory Default = Gas for gas units and Electric for all other units (cooling only units and heat pumps) and heat pumps, or Gas for gas units.

Number of Heat Stages – Indicates how many heat stages are available for use. See configuration in Appendix A for details on specific unit configuration.

Factory Default = 1 for single heat stage units
2 for dual stage units
0 for cooling only units

Continuous Occupied Exhaust – This point tells the controller when to run the power exhaust if equipped on the unit.
If set to YES, the power exhaust will be on all the time when in occupied mode and will be off when in unoccupied mode. If set to NO the power exhaust will be controlled by the Power Exhaust Setpoint.

Default = NO

RH Control - Enables dehumidification control if an RH sensor is available and the unit has the Humidi-MiZer dehumidification option installed.

Range = Disable/Enable
Default = Disable
(Enabled with Humidi-MiZer option)

DCV Control - Enables demand controlled ventilation (DCV) if valid CO2 sensor value is available and the unit has an economizer installed.

Range = Disable/Enable Default = Disable

Indoor CO_2 Sensor Value @ Min mA – Sets the indoor CO_2 value when the board reads 4 mA at input 1 or 2.

Range = 0 to 9999 ppm Default = 0 ppm

Indoor CO_2 Sensor Value @ Max mA – Sets the indoor CO_2 value when the board reads 20 mA at input 1 or 2.

Range = 0 to 9999 ppm Default = 2000 ppm

Outdoor CO_2 Sensor Value @ Min mA – Sets the outdoor CO_2 value when the board reads 4 mA at input 1 or 2.

Range = 0 to 9999 ppm Default = 0 ppm

Outdoor CO_2 Sensor Value @ Max mA – Sets the outdoor CO_2 value when the board reads 20 mA at input 1 or 2.

Range = 0 to 9999 ppm Default = 2000 ppm

NOTE: The indoor and outdoor min and max mA setting are used to set the linear curve of mA vs. PPM.

Clockset

This submenu screen allows you to set the date and time manually. The Daylight Savings Time (DST) can also be changed here. The date and time is automatically set whenever software is downloaded. The clock is a 24 hour clock and not am/pm. The time should be verified (and maybe changed) according to unit location and time zone.

Factory Default = Eastern Standard Time

USERPW

This submenu screen allows you to change the user password to a four number password of choice. The User password change screen is only accessible with the Administrator Password (1111). The ADMIN password will always override the user password.

Factory Default = 0000
Range = 0000-9999

OPERATION

The RTU Open will control the compressors, economizer and heating outputs based on its space temperature input and setpoints. It can also be controlled by a building control system or zoning system. An optional CO_2 IAQ sensor mounted in the space can influence the economizer minimum position. The RTU Open has a hardware clock that can allow scheduling for stand-alone operation. The RTU Open's default is to control to occupied setpoints all the time, until a type of occupancy control is set. The following sections describe the operation for the functions of the RTU Open.

Occupancy

Occupancy is the fundamental overall control of equipment. The unit can be in one of two states: Occupied or Unoccupied. These are usually referred to as periods because they represent periods of any given day. Before RTU Open can operate specific functions of the equipment it is installed on, occupancy must be determined. There are four different ways RTU Open can determine occupancy. These are described below and selected by the configuration point Occupancy Source.

Always Occupied (Default)

The unit will not determine occupancy and continuously run in the occupied state or period. RTU Open ships from the factory with this setting to allow immediate operation.

BACnet Schedule

When Occupancy Source is set to BACnet Schedule, RTU Open will use a schedule to change occupancy based upon a day of week and a time period. Local time and date should be set in the RTU Open for this function to operate properly. This function applies if setting a local schedule in the RTU Open or if applying the unit to an i-Vu Open network or an Open zoning system. An Open network schedule can override a local schedule within the unit. A space sensor push button override is only available when running a local or Open schedule. The push button will override an unoccupied period to occupied for the specified time duration.

BAS On/Off

When Occupancy Source is set to BAS On/Off, RTU Open follows occupancy based on an On/Off command to the BAS ON/OFF software point. An on command sets the occupancy to occupied, and an off command sets it to unoccupied. The Building Automation System can be speaking BACnet, Modbus, N2, or LON and is writing to the BAS On/Off point in the open protocol point map.

Remote Occ Input

When Occupancy Source is set to Remote Occ Input, RTU Open follows occupancy based on the remote occupancy switch input. Inputs 3, 5, 8, and 9 on plug J5 can be hard-wired to command the unit's occupancy. The Occupancy Contact point show the status as on or off, on is occupied and off is unoccupied.

Indoor (Supply) Fan

The indoor fan can be configured to operate in three different manors. The configuration point Fan Mode determines how the fan will run. The fan will always be disabled if a fire shutdown or safety chain alarm is active. A valid space temperature and supply air temperature must be available for the fan to operate. There is a unit start delay in effect when the unit is transitioning from unoccupied to occupied. The following describes specific fan operation based on the Fan Mode configuration value.

Auto

When Fan Mode is set to Auto, RTU Open will cycle the fan on and off based on the demand for heating, cooling, and dehumidification. There is a configurable fan off delay that is upheld before shutting the fan off after conditioning has ended.

Continuous

When Fan Mode is set to Continuous, RTU Open will cycle the fan based on occupancy. The fan will run continuously whenever the unit is occupied and operate in the auto mode during the unoccupied period.

Always On

When Fan Mode is set to Always On, RTU Open will run the fan all the time regardless of occupancy or demand.

Indoor (Supply) Fan Status

The RTU Open has an optional Supply Fan Status input to provide proof of airflow. If this is enabled, the point will look for a contact change whenever the Supply Fan Relay is on. If it is not enabled then it will always be the same state as the Supply Fan Relay. The cooling, economizer, heating, dehumidification, CO_2 and power exhaust routines will use this input point for fan status.

Cooling

The compressor outputs are controlled by the Cooling Control PID Loop and Cooling Stages Capacity algorithm. They will be used to calculate the desired number of stages needed to satisfy the space by comparing the Space Temperature (SPT) to the Occupied Cool Setpoint plus the T56 slider offset when occupied and the Unoccupied Cool Setpoint (UCSP) plus the T56 slider offset, if unoccupied. The economizer, if available, will be used for cooling in addition to the compressors. The following conditions must be true in order for this algorithm to run:

- Indoor Fan has been ON for at least 30 seconds.
- Heat mode has not been active for 5 minutes.
- If occupied and the SPT > (occupied cool setpoint plus the T56 slider offset).
- Space Temperature and supply air temperature values are valid.
- If it is unoccupied and the SPT > (unoccupied cool setpoint plus the T56 slider offset).
- If economizer is available and active and economizer open > 90% and SAT > (SAT low limit + 5°F) and SPT > effective set point + 0.5°F.

  OR

  Economizer is installed, but not available due to outdoor air conditions

  OR

  Economizer is not installed
- OAT > DX Lockout temperature

If all of the above conditions are met, the controller uses a PID logic loop to energize or de-energize compressors to satisfy the cooling demand.

There is a fixed 3-minute minimum on time and a 5-minute off time for each compressor output.

Any time the compressors are running the RTU Open will stage down the compressors if the SAT becomes less than the cooling low supply air setpoint. After a compressor is staged off, it may be started again after a normal time-guard period and the supply air temperature has increased above the low supply air setpoint.

Supply Fan

The RTU Open supply fan may be configured for 1 of 3 Fan Control modes:

- **Single -** The fan operates at one speed only and provides on/off operation
- **Two Speed -** The fan operates at 1 of 2 speeds depending on the mode of operation and load conditions. During fan only or single stage cooling, the fan operates at low speed. During heating, dehumidification, second stage cooling, or if maximum economizer operation is required, the fan operates at high speed.
- **Variable Speed -** The fan operates at a variable speed to meet the load conditions and SAT safety requirements to provide maximum energy savings by minimizing fan horsepower consumption. Fan speed is NOT controlled by static pressure.

The RTU Open supply fan may be configured for 1 of 3 Fan Modes:

- **Auto -** The fan cycles on/off in conjunction with heating or cooling.
- **Continuous -** The fan runs continuously during occupancy and intermittently during unoccupied periods with heating and cooling.
- **Always On -** The fan runs continuously regardless of occupancy or calls for heating and cooling.

Occupancy can be determined by Linkage, BACnet schedules, BAS schedules, or in response to a remote occupancy switch.

A Fan Off Delay allows the supply fan to continue operating after heating or cooling stops.

If the following alarms are active, the fan turns off immediately, regardless of the occupancy state or demand:

- Fire Shutdown
- Safety chain
- SAT sensor alarm
- SPT sensor alarms

The RTU Open does not include smoke-control functions such as a smoke-purge, zone-pressurization, or smoke-ventilation. Each of these modes require a field-designed circuit to operate the following by local fine codes:

- RTU supply fan
- RTU economizer
- RTU power exhaust

The RTU Open many be configured to accept a Supply Fan Status input to provide proof the supply fan is operating. When enabled, a loss or lack of fan status will stop heating and cooling operation.

A supply Fan Alarm Service Timer function is available to track the number of supply fan run hours and generate an alarm when the accumulated runtime exceeds the set threshold.

Economizer

The Economizer dampers are used to provide free cooling when the outside conditions are suitable and Indoor Air Quality, if optional CO_2 sensor is installed.

The following conditions must be true for economizer operation:

- Indoor Fan is on.
- Enthalpy is Low if the Enthalpy input is enabled.
- SAT reading is available.
- OAT reading is available.
- SPT reading is available.
- OAT <= High OAT economizer lockout configuration (default = 75).
- OAT <= SPT

If any of the mentioned conditions are not true, the economizer will be set to its configured minimum position.

If the RTU Open is configured for VFD or 2-speed fan, and the fan is on or at the highest speed, or if the unit is configured for single-speed fan, then the economizer will use the Vent Dmpr Pos/DCV Min Pos setpoint as the minimum economizer position when occupied. If the unit is configured for VFD or 2-speed fan, and the fan is on or at the lowest speed, the economizer will use the Low Fan Econ Min Pos.

NOTE: For LC WeatherExpert units or any unit with Variable Speed fan control, the RTU Open will determine the required minimum economizer position (Calculated Min Econ Pos) based on the fan's actual operation speed.

The minimum damper position can be overridden by the IAQ routine described later in this section.

If the above conditions are true, the Economizer control will calculate a damper position starting with a minimum vent position and based on current space temperature and a setpoint that is one degree less than the effective cool setpoint. If the SAT drops below the cooling low supply air setpoint (+ 5°F), the economizer will close as required but not to less than the to minimum position. The Calculated Min Econ Pos used for control is displayed in the Maintenance section.

Power Exhaust

RTU Open may enable and disable an exhaust fan based on either the controller's occupancy or its economizer damper position. If configured for continuous occupied operation, it will be energized whenever the controller is in the occupied mode and disabled when in the unoccupied mode. If configured for damper position control, it will be energized whenever the economizer exceeds the power exhaust setpoint and disabled when the economizer drops below the setpoint by a fixed hysteresis of 10%. If the Fan Control is set to Two Speed or Variable

Speed, the Power Exhaust Setpoint is automatically adjusted based on the fan's air delivery. The Calculated PE Setpoint used for control is displayed in the Maintenance section.

Pre-Occupancy Purge

Pre-Occupancy Purge allow the rooftop equipment with an economizer damper to utilize outdoor air to purge the space of contaminates just prior to the beginning of the occupied period.

The following conditions must be true for pre-occupancy purge to operate:

- Pre-Occupancy Purge set to Enable
- Economizer Exists set to Yes
- A local time schedule is configured
- The local time schedule is currently unoccupied and the remaining them is less than the configured Purge Time

When the RTU Open schedule is unoccupied and the remaining unoccupied time is less than the purge time, the supply fan starts. The economizer damper opens to the configured Economizer Purge Min Pos. The RTU Open continues to operate in this mode until the occupied start time is reached. The Pre-Occ Purge state is displayed in the Maintenance section.

Heating

The heat outputs are controlled by the Heating Control PID Loop and Heating Stages Capacity algorithm. They will be used to calculate the desired number of stages needed to satisfy the space by comparing the SPT to the Occupied Heat Setpoint the T56 slider offset when occupied and the Unoccupied Heat Setpoint plus the T56 slider offset if unoccupied. The following conditions must be true in order for this algorithm to run:

- Indoor Fan is ON for any unit with electric heat.
- Cool mode has not been active for 5 minutes.
- If occupied and SPT <(occupied heat setpoint plus T56 slider offset)
- SPT and supply air temperature values are available
- If it is unoccupied and the SPT < (unoccupied heat setpoint plus T56 slider offset).
- OAT < High OAT lockout temperature.

If all of the above conditions are met, the controller uses a PID logic loop to energize or de-energize heat outputs to satisfy the heat demand. If the SAT begins to exceed the high supply air setpoint, a ramping function will cause the Heat Stages Capacity algorithm to decrease the number of stages until the SAT has dropped below the setpoint. There is a fixed one minute minimum on time and a one minute off time for each heat output. There is a 10 minute minimum stage up delay if the heat demand is ≤ 3°F, and a 2 minute minimum stage up delay if heat demand is > 3°F.

Indoor Air Quality

If the optional indoor air quality sensor is installed, the RTU Open will maintain indoor air quality within the space at the user configured differential set point. The set point is the difference between the indoor air quality and an optional outdoor air quality sensor. If the outdoor air quality is not present then a fixed value of 400ppm is used. The following conditions must be true in order for this algorithm to run:

- The mode is occupied.
- Indoor Fan is ON.
- Indoor Air Quality is a valid reading.

As air quality within the space decreases, the minimum position of the economizer damper will be increased thus allowing more outdoor air into the space depending on the relationship of the indoor air quality to the differential setpoint. If all the above conditions are true, the IAQ algorithm will run and calculates an IAQ minimum position value using a PID loop. The IAQ minimum damper position is then compared against the user configured economizer minimum position and the greatest value becomes the final minimum damper position of the economizer output.

If the IAQ minimum position calculated by the control is greater than the DCV Max Vent Damper Pos configured, then it will be clamped to the configured value.

Dehumidification

The RTU Open will provide occupied and unoccupied dehumidification only on units that are equipped with the Humidi-MiZer option from the factory. This function requires a space relative humidity sensor or a humidistat for control. The space relative humidity senor can be installed and configured as one of the two analog input channels (inputs 1 or 2 on J4), or a humidistat can be installed and configured as switch input 9 on J5 (except on units configured as LC WeatherExpert with gas heat). When using a relative humidity sensor to control dehumidification, occupied or unoccupied dehumidification setpoints are use accordingly. When using a humidistat, setpoints are not used and the dehumidification call comes when the humidistat indicates high humidity.

When the indoor relative humidity becomes greater than the dehumidification setpoint (or switches from low to high), a demand for dehumidification demand is identified. Compressor state is monitored and time guards are honored. If a compressor was just turned off prior to the dehum call the dehumidification output will be delayed the 5 minute minimum off time of the compressor. When ok to dehumidify, the dehumidification output (J11-7, 8) will be energized. This will bring on the supply fan (at high fan speed if Fan Control is set to "Two Speed" or "Variable Speed"), all compressors, and the dehumidification relay placing the unit in Hot Gas Reheat dehumidification mode. If dehumidification is called for during cooling or cooling is called for during dehumidification, the unit will run in Subcooling dehumidification mode. Individual unit circuits can be in different dehumidification modes based on the demand. Refer to the base units operation for additional information.

NOTE: There is a fixed 5% hysteresis that the indoor relative humidity must drop below the active setpoint to end the dehumidification mode and de-energize the dehumidification output. The output will also de-energize if the fan relay is de-energized.

Demand Limit

If the RTU Open receives a level 1 (one degree offset), 2 (two degree offset), or a 3 (4 degree offset) to the BACnet demand limit variable, the controller will outwardly expand the heating and cooling setpoints by the configured demand limit setpoint value and remain in effect until the BACnet demand limit variable receives a 0 value.

Unoccupied Free Cooling

When the unit is equipped with an economizer, the control can run a night time free cooling (NTFC) mode called Unocc Free Cooling. In this mode the damper is utilized to bring in outdoor air for free cooling during unoccupied periods. The following conditions must be true for unoccupied free cooling to operate:

- Unocc Free Cool Enable set to Enable
- The system is unoccupied
- The outside air temperature is below the Economizer High OAT Lockout Temp
- The outside air temperature is less than the space temperature
- Enthalpy (if enabled) is Low

When the RTU Open schedule is unoccupied and the space temperature rises at least 1 degree above the Occupied Cooling Setpoint, the supply fan starts. The economizer damper opens as necessary to cool the space. The RTU Open continues to operate in this mode until the space is satisfied or the outside air conditions are no longer suitable for free cooling.

Optimal Start

The RTU Open may utilize either of two different optimal start types. Temperature Compensated start is designed specifically for LC units in order to minimize fan operation. Temperature Compensated Start changes the setpoint from the unoccupied setpoint directly to the Occupied setpoints at a calculated time prior to occupancy in order to achieve the occupied setpoint at the scheduled occupied time. Learning Adaptive Start adjusts the effective setpoints to achieve the occupied setpoints by the time scheduled occupancy begins. The Learning Adaptive algorithm works by moving the unoccupied setpoints toward the occupied setpoints. The rate at which the setpoints move is based on the outside air temperature, design temperatures, and capacities. The Optimal Start recovery period may begin as early as 4 hours prior to occupancy. To disable Optimal Start, set the optimal start type to None. The following conditions must be true for optimal start to operate:

- Under SETPOINT, Optimal Start Value must be set greater than zero
- The Optimal Start type must not be None
- The system is unoccupied
- The RTU Open has a valid outside air temperature
- The RTU Open is running occupancy based on a local occupancy schedule, where next time occupied is known.

Fire Shutdown

Fire Shutdown may be configured on Binary Input 5. A typical application involves a smoke detector or fire shutdown contact, which, when active, immediately shuts down equipment operation.

Compressor Safety

Compressor Safety may be configured on Binary Input 3. A compressor safety tripped indicator circuit is available on most Carrier rooftop equipment. A Compressor Safety Alarm indicates that the equipment requires attention. Cooling, heating, and supply fan outputs are not interrupted. Normal operation resumes when the compressor safety circuit is de-energized.

Fan Status

Fan Status may be configured on any unused binary input channel. A typical application would be an airflow switch, current sensing relay, or other device that provides a supply fan running verification. Enabling this function displays the supply fan's status on the equipment graphic. If the controller loses fan status during operation, heating and cooling are disabled, the economizer damper (if available) is closed, and an alarm for loss of status is indicated. If the fan status is on when the controller is commanding the fan off, the unit remains in the off state. An alarm is generated indicating that the fan is running when it should be off.

Filter Status

Filter status may be configured on any unused binary input channel. A typical application is a differential pressure switch that senses the pressure drop across a filter bank. When the pressure across the filter bank exceeds the setpoint of the differential pressure switch, the Filter status is displayed as Dirty on the controller graphic. An alarm indicates a dirty filter.

Door Switch

A Door Contact may be configured on any unused binary input. A typical application is an occupancy sensor mounted within the space served by a single zone rooftop. Door Contact disables mechanical cooling and electric or gas heating, when active. Economizer cooling, if available, continues to operate. A configurable Door Alarm Delay is provided to prevent immediate action. The default is set to 60 seconds.

Linkage

The RTU Open may serve as an air source to an Open Variable Volume and Temperature (VVT®) system. When the RTU Open is part of a VVT system and the controllers are wired together to form a network, the controllers may use a method of communication known as Linkage. Linkage is a method by which an air source and its subordinate zone terminals exchange data to form a coordinated HVAC system. The system's air source controller, zone controllers, and bypass controller are linked so that their data exchange can be managed by one zone controller configured as the VVT Master. The VVT Master gathers the following information from the slave zone controllers:

- occupancy status
- setpoints
- zone temperature
- relative humidity
- CO_2 level
- damper position
- optimal start data

The VVT Master performs mathematical calculations and algorithms on the data and then sends the composite information to the air source. The VVT Master receives information from the air source such as mode, supply air temperature, and outside air temperature, and passes that information to all linked controllers.

Linkage Air Source Modes

In a linked system, the air source determines its operating mode and qualifies that mode based on its own Supply Air Temperature (SAT). The following modes can be sent by the air source depending on its configuration:

- Off – Air source fan is off
- Fan Only – Air source fan is on and providing ventilation (neutral SAT) without heating or cooling
- Economizer Cooling – Air source fan is on and providing cooling, using economizer only
- Cooling – Air source fan is on and cooling is provided by economizer and mechanical cooling
- Heating – Air source fan is on and heating is provided (gas or electric)
- Dehumidification – Air source fan is on and Humidi-MiZer is active
- Test – The RTU Open Service Test mode is active
- Shutdown – Air source fan is off due to Safety Chain, Fire Shutdown, or invalid SAT sensor
- Unocc Free Cooling – Air source fan is on, with the economizer providing cooling while unoccupied

TROUBLESHOOTING

General

The RTU Open controller acts as an intelligent imbedded thermostat to the rooftop unit, but can be monitored and controlled from i-Vu Open (Linkage) or a 3rd party network. This causes the system as a whole to be troubleshot from three points of view. The three parts to the system are the rooftop unit, the Open controller, and the network connected. Determining which part needs to be troubleshot is the first step.

The Open controller can be used to troubleshoot the rooftop unit and/or itself with service test, communicating LED's, and built in alarms. Disconnecting the RTU Open from the network may also help troubleshooting the controller and rooftop unit. Third Party Network troubleshooting may also be required. For base unit troubleshooting, refer to specific base unit Service Maintenance manual.

There is an on-board battery that is used for RAM and clock back-up (see Fig. 1). It is a 3-volt lithium battery (CR2032). The average life is 7 years with a minimum of 10,000 hours of back-up. When the RTU Open board is powered up, the battery is not being used. If power is lost, the battery backs up the time clock.

Replacing the RTU Open's Battery

To determine when to replace the battery, remove and measure the voltage. If the voltage is below 2.9 volts, replace the battery.

⚠ CAUTION

UNIT OPERATION HAZARD

Failure to follow this caution will result in loss of data stored to the RTU Open's RAM.

Power must be **ON** to the RTU Open when replacing the battery or date, time, and trend data will be lost.

1. Remove the battery from the controller, making note of the battery's polarity.
2. Insert the new battery, matching the battery's polarity with the polarity indicated on the RTU Open .

Thermistor Troubleshooting

RTU Open uses thermistors to sense temperatures for control operation of the unit. Resistances at various temperatures are listed in Table 2. Thermistor pin connections are shown in Table 1. Thermistors are used for supply air temperature (SAT), outdoor air temperature (OAT), and space temperature (SPT) and all must be a 10 kilo-ohm type II sensor.

Table 2 – Thermistor Resistance vs Temperature Values for Space Temperature Sensor, Supply Air Temperature Sensor, and Outdoor Air Temperature Sensor

TEMP (C)	TEMP (F)	RESISTANCE (Ohms)
–40	–40	335,651
–35	–31	242,195
–30	–22	176,683
–25	–13	130,243
–20	–4	96,974
–15	5	72,895
–10	14	55,298
–5	23	42,315
0	32	32,651
5	41	25,395
10	50	19,903
15	59	15,714
20	68	12,494
25	77	10,000
30	86	8,056
35	95	6,530
40	104	5,325
45	113	4,367
50	122	3,601
55	131	2,985
60	140	2,487
65	149	2,082
70	158	1,752

To check accuracy, use a high quality digital volt-ohmmeter. Connect the meter to the thermistor leads to obtain a resistance value. Use Table 2 to convert that resistance to a temperature. Next step is to measure temperature at probe location with an accurate thermocouple-type temperature-measuring instrument. Temperature measured by thermocouple and temperature determined from thermistor voltage reading should be close, within 5°F if care was taken in applying thermocouple and taking readings. If a sensor must be

corrected, use the RTU Open's calibration function to offset the temperature reading.

Software Version

During Start-up and throughout the life of the equipment, it may be necessary to obtain the RTU Open's software version. To do this a Modstat must be run on the controller. This can be done from the BACview user interface by holding the function (FN) key and pressing the period (.) key. An example of the beginning lines of a Modstat is shown in Fig. 16. The application software version shows the current running software of the board. In the case of the example in Fig. 16 the rtu_open_3-20130618 refers to RTU Open software version 3-20130618. The last 8 digits of the number refer to a date (YYYYMMDD). The first 4 digits are the year (2013) and the month and day (0618), so this version is June 16th 2013.

Communication LED'

The LED's indicate if the controller is speaking to the devices on the network. The LED's should reflect communication traffic based on the baud rate set. The higher the baud rate the more solid the LED's will appear. See Table 3.

```
07/18/2013  10:36:31         CM: 30

Device Instance: 1610130

Application Software Version: PRG:rtu_open_3-20130618

Flash Archive Status: Valid on 07/17/13 14:36:52

1 PRGs loaded.  1 PRGs running.

Module status:
Firmware sections validated in flash memory
=============================================
  Boot16-H_IAR     - v2.09:016   Aug 13 2009
  RTU-OPEH DRIVER  - v3.04:122   Mar 18 2013
```

C13647

Fig. 16 - Example Modstat

Table 3 – LED's

The LED's on the RTU Open show the status of certain functions

If this LED is on...	Status is...
Power	The RTU Open has power
Rx	The RTU Open is receiving data from the network segment
Tx	The RTU Open is transmitting data over the network segment
BO#	The binary output is active

The **Run** and **Error** LED's indicate control module and network status

If Run LED shows...	And Error LED shows...	Status is...
2 flashes per second	Off	Normal
2 flashes per second	2 flashes, alternating with **Run** LED	Five minute auto–restart delay after system error
2 flashes per second	3 flashes, then off	Control module has just been formatted
2 flashes per second	4 flashes, then pause	Two or more devices on this network have the same MSTP network address
2 flashes per second	On	Exec halted after frequent system errors or control programs halted
5 flashes per second	On	Exec start–up aborted, Boot is running
5 flashes per second	Off	Firmware transfer in progress, Boot is running
7 flashes per second	7 flashes per second, alternating with **Run** LED	Ten second recovery period after brownout
14 flashes per second	14 flashes per second, alternating with **Run** LED	Brownout
On	On	Failure. Try the following solutions: – Turn the RTU Open off, then on. – Format the RTU Open. – Download memory to the RTU Open. – Replace the RTU Open.

Table 4 – RTU Open Alarms

POINT NAME	BACnet Object NAME	ACTION TAKEN BY CONTROL	RESET METHOD	PROBABLE CAUSE
Safety Chain	safety_alarm	Immediate Shutdown	Automatic	Over load Indoor Fan or Electric Heater overheat
Fire Shutdown	fire_alarm	Immediate Shutdown	Automatic	Smoke detected by smoke detector or configuration incorrect
Gas Valve	igc_alarm	Immediately operate fan at high-est speed	Automatic	Gas valve stuck open after heating cycle, causing heat to continue to operate.
Supply Fan	sfan_fail_alarm	Immediately disable Operation	Automatic	Tripped Circuit Breaker, Broken belt, Bad indoor fan motor, Configuration incorrect, Bad fan status switch.
Supply Fan in Hand	sfan_hand_alarm	Ramp down Operations	Automatic	Bad Fan Status Switch, Configuration incorrect.
Compressor Status	comp_alarm	Alert Generated	Automatic	Compressor would not start
Space Temp Sensor	spt_fail	Ramp down Operations	Automatic	Bad sensor, bad wiring, failure to receive Network or Linkage Space Temp value, or sensor configured incorrectly.
SPT Sensor	spt_sensor_fail	Ramp down Operations	Automatic	SPT sensor loss or communications
Supply Air Temp Sensor	loc_sat_sensor_fail	Ramp down Operations	Automatic	Faulty, shorted, or open thermistor caused by wiring error or loose connection.
Local OAT Sensor	ioc_oat_sensor_fail	May cause Economizer and Low ambient DX cooling lockout to be disabled	Automatic	Faulty, shorted, or open thermistor caused by wiring error or loose connection.
Outdoor Air Temp Sensor	oat_fail	Economizer and Low ambient DX cooling lockout disabled.	Automatic	Failure to receive valid local or network value for Outdoor Air Temperature
Space Relative Humidity Sensor	sprh_sensor_fail	Dehumidification disabled	Automatic	Sensor reading is out of range. Bad sensor, bad wiring, failure to receive Network or Linkage RH value, or sensor configured incorrectly.
Indoor Air Quality Sensor	iaq_sensor_fail	No IAQ Operation	Automatic	Sensor reading is out of range. Bad sensor, bad wiring, failure to receive Network or Linkage RH value, or sensor configured incorrectly.
Outdoor Air Quality Sensor	oaq_fail	Control uses default OAQ value of 400 ppm.	Automatic	Sensor reading is out of range. Bad sensor, bad wiring, failure to receive Network value, or sensor configured incorrectly.
Space Temperature	spt_alrm_status	Alert Generated	Automatic	Space Temperature value is less than the low limit value or greater than the high limit value
Supply Air Temperature	sat_alarm	Alert Generated	Automatic	SAT is greater than the high limit value or less than the low limit value for more than 5 minutes
Setpoint Slider	slidepot_alarm	Set Offset to zero	Automatic	STO sensor is open for more than 5 seconds
Switch Configuration	di_cfg_alarm	Disable only wrong switch functions	Configure correctly	More than one discrete input is configured to provide the same function.
Analog Input Configuration	ai_cfg_alarm	Disable 4 selectable analog inputs	Configure correctly	More than one analog input is configured to provide the same function.
Space Relative Humidity	sprh_hi_alarm	Alert Generated	Automatic	Indoor RH is greater than the high limit value or less than the low limit value for more then 15 minutes
Indoor Air Quality	iaq_alarm	Alert Generated	Automatic	CO_2 ppm reading is above the configuration for 1 minute
Supply Fan Runtime	sfan_rntm_alarm	Alert Generated	zero the timer	Supply fan run time exceeded user defined limit
Compressor 1 Runtime	comp1_rntm_alarm	Alert Generated	zero the timer	Compressor #1 run time limit is exceeded
Compressor 2 Runtime	comp2_rntm_alarm	Alert Generated	zero the timer	Compressor #2 run time limit is exceeded
Filter	filter_alarm	Alert Generated	Automatic / reset timer	Dirty Filter, supply fan run time exceeded, filter switch configuration wrong.
Airside Linkage Alarm	air_linkage_fail	Alert Generated	Automatic	Airside Linkage communication from VVT master terminal has stopped or failed

Alarms

Alarms are provided to indicate a possible problem with the controller or unit. Alarms can be checked through a network and/or the local access device. All alarms are listed in Table 4 with name, object name, action taken by control, reset method, and possible cause. Some alarms can occur based on specific configurations.

Safety Chain Alarm

This alarm occurs immediately if a field installed, normally closed, safety contact opens and interrupts 24VAC signal input #4 (J1-9). The Unit Status will be Shutdown and the System Mode will be Disable. All unit operations stop immediately and will not restart until the alarm automatically clears. There are no configurations for this alarm; it is all based on field installed wiring. This alarm will not occur if Fire Shutdown Alarm is active. Normal operation resumes when the safety chain circuit is complete.

Fire/Smoke Shutdown Alarm

This alarm occurs immediately when the smoke detector senses smoke. The Unit Status will be Shutdown and the System Mode will be Disable. All unit operations stop immediately and will not restart until the alarm automatically clears. If there is not a smoke detector installed or the smoke detector did not trip, check input configurations.

NOTE: The default function for input 5 is a normally open Fire Shutdown input.

Gas Valve Alarm

This alarm occurs 60 second after gas heat has been de-energized but the Integrated Gas Control (IGC) board is still indicating a need for fan operation. Upon alarm detection, the fan will start immediately and run at its highest speed.

NOTE: The default function for input 9 is a normally open IGC input for LC WeatherExpert units.

Supply Fan Failure

This alarm occurs when the indoor fan is being command on and the fan status switch feedback is showing the fan off. This will end current operating mode and disable unit operation. This alarm requires a fan status switch to be configured on one of the inputs.

Supply Fan in Hand

This alarm occurs when the indoor fan is being commanded off and the fan status switch feedback is showing the fan is on. This will prevent any operating mode and disable unit operation. This alarm requires a fan status switch to be configured on one of the inputs.

Compressor Safety

This alarm indicates the base unit's compressor safety circuit is energized. Cooling, heating, and supply fan outputs are not interrupted. Normal operation resumes when the compressor safety circuit is de-energized.

Space Temp Sensor

This alarm occurs if the space sensor wired to the RTU Open is disconnected or shorted for more than 10 seconds or if the SPT value from the Network or Airside Linkage is no longer being received. When this occurs the Unit Status will be Shutdown and the System Mode will be Run. Sensor, sensor connections, wiring, board connection, and configurations should be checked for faults or errors. Alarm will reset automatically when cause is fixed.

SPT Sensor

This alarm occurs if the SPT sensor wired to the RTU Open stops communicating with the controller.

Supply Air Temp Sensor

This alarm occurs immediately when the supply air temperature sensor wired to the RTU Open is disconnected or shorted. When this occurs the Unit Status will be Shutdown and the System Mode will be Run. Sensor, sensor connections, wiring, board connection, and configurations should be checked for faults or errors. Alarm will reset automatically when cause is fixed.

Local OAT Sensor

This alarm occurs when the outdoor air sensor indicates a short or open circuit or the Network OAT value is no longer being received. Economizer cooling and optimal start functions are disabled. Normal operation resumes when the controller detects a valid sensor.

Outdoor Air Temp Sensor

This alarm indicates that a valid OAT sensor value is no longer available to the controller after having been available previously.

Space Relative Humidity Sensor

This alarm indicates the mA input at the associated channel falls below 3.5 mA or rises above 21 mA, or the Network value for space RH is no longer being received. Cooling, heating, and supply fan operation continues, however, the controller's Humidi-MiZer binary output is disabled until the fault condition is corrected.

IAQ Sensor

This alarm indicates the mA input at the associated channel falls below 3.5 mA or rises above 21 mA, or the Network value for space RH is no longer being received. Cooling, heating, and supply fan operation continues. However, the controller's IAQ control function is disabled until the fault condition is corrected.

OAQ Sensor

This alarm indicates the mA input at the associated channel falls below 3.5 mA or rises above 21 mA, or the Network value for space RH is no longer being received. Cooling, heating, and supply fan operation continues. However, the controller's IAQ control function uses 400ppm as the fixed outdoor air CO_2 level until the fault condition is corrected.

Space Temperature

When Occupied, a Space Temperature alarm is generated if the space temperature falls below the lower limit or rises above the upper limit.

When Unoccupied, an unoccupied space temperature alarm is generated when the space temperature falls below the alarm configuration Unoccupied Low SPT Alarm Limit or when the space temperature rises above the alarm configuration Unoccupied High SPT Alarm Limit.

The following values are related to the Space Temperature alarm:

Alarming Temperature – This variable displays the value of the space temperature that caused the alarm and is only visible when the space temperature is in an alarm state.

Alarm Limit Exceeded – This variable displays the value of the alarm setpoint that was exceeded by the alarming space temperature and is only visible when the space temperature is in an alarm state.

Supply Air Temperature

This alarm indicates the supply air temperature fell below the alarm configuration Low SAT Alarm Limit or exceeded the alarm configuration High SAT Alarm Limit for 5 minutes. This alarm is inhibited until the RTU has been running for 30 minutes to allow for system stabilization after startup.

Setpoint Slider

This alarm indicates an open circuit is detected at the setpoint adjustment input. This can only occur if the Space Sensor Type is set to T56. Note that only an open circuit results in an alarm. A short across this input offsets the setpoints negatively by the amount configured by configuration Setpoint Adjustment Range.

Switch Configuration

This occurs if more than one binary input (inputs 3, 5, 8, and 9) is configured for the same function. When this happens the two inputs (or more) configured wrong will be disabled as an inputs. This alarm will automatically be cleared when configuration is corrected.

An example of this would be: Input 3 = Compressor Safety, input 5 = Fan Status, input 8 = Fan Status, and input 9 = Humidistat; the alarm would be active, unit would run, compressor safety and humidistat would function normally, and Fan Status (inputs 5 & 8) will be interpreted as “No Function.”

Analog Input Configuration

This occurs if more than one analog input (inputs 1 & 2) is configured for the same sensor. When this happens the two inputs will be disabled as inputs. This alarm will automatically be cleared when configuration is corrected.

An example of this would be: Input 1 = IAQ Sensor, input 2 = IAQ Sensor; the alarm would be active, unit would run, but the IAQ Sensor (inputs 1 & 2) will be interpreted as “No Function.”

Space Relative Humidity

This alarm indicates the space humidity fell below the alarm configuration Low Space Humidity Alarm Limit or exceeded the alarm configuration High Space Humidity Alarm Limit for 10 minutes. This alarm is inhibited until the RTU runs for 15 minutes to allow for system stabilization after startup.

Indoor Air Quality

This alarm indicates the space CO_2 level exceeds the alarm configuration Occupied High CO_2 Alarm Limit for 1-minute. This alarm will be inhibited until the RTU has been running for 2-minutes to allow for system stabilization after startup.

Supply Fan Runtime

This alarm indicates the accumulated runtime exceeds the unit configuration Supply Fan Service Alarm Timer value (when not set to 0). This alarm is most commonly used to indicate an equipment maintenance interval is due. The supply fan runtime accumulator may be reset by setting the maintenance point Reset Supply Fan Runtime Alarm to Clear, and then back to Run – acknowledging each selection by clicking the OK button when it appears. Setting unit configuration Supply Fan Service Timer value to 0 disables the supply fan runtime alarm function.

Compressor 1 Runtime

This alarm indicates the accumulated runtime exceeds the unit configuration Compressor 1 Service Alarm Timer value (when not set to 0). This alarm is most commonly used to indicate an equipment maintenance interval is due. The Compressor 1 Runtime accumulator may be reset by setting the maintenance point Reset Comp 1 Runtime Alarm to Clear, and then back to Run – acknowledging each selection by clicking the OK button when it appears. Setting unit configuration Compressor 1 Service Timer value to 0 disables the Compressor 1 Runtime alarm function.

Compressor 2 Runtime

This alarm indicates the accumulated runtime exceeds the unit configuration Compressor 2 Service Alarm Timer value (when not set to 0). This alarm is most commonly used to indicate an equipment maintenance interval is due. The Compressor 2 runtime accumulator may be reset by setting the maintenance point Reset Comp 2 Runtime Alarm to Clear, and then back to Run – acknowledging each selection by clicking the OK button when it appears. Setting unit configuration Compressor 2 Service Timer value to 0 disables the Compressor 2 runtime alarm function. Note that this function is unavailable if the service configuration Compressor Stages value is not set to Two Stages.

Filter

This alarm indicates the accumulated runtime exceeds the unit configuration Filter Service Alarm Timer value (when not set to 0). This alarm is most commonly used to indicate a filter replacement is due. Reset the filter service runtime accumulator by setting the maintenance point Reset Filter Runtime Alarm to On, back to Off, and clicking the OK button after each setting. Setting unit configuration Filter Service Alarm Timer value to 0 disables the filter service alarm function.

Airside Linkage Alarm

This alarm indicates that RTU Open was connected to a zoned system using Airside Linkage and it lost communications with its linkage master or it is receiving data from multiple masters.

Performance

Current Performance Data

The RTU Open collects performance data during operation. The data can be used to monitor the operation of the unit over time.

Equipment Runtime

The RTU monitors the supply fan and records the amount of time the unit has been operating. This value will continue to accumulate runtime until Performance Data has been changed to Reset or will also automatically reset every 24 hours at midnight if Save Performance Data Daily is set to Enable.

Economizer Utilization

The amount of time the equipment has operated in the economizer mode as a percentage of the equipment runtime above. This value will continue to accumulate runtime until Performance Data has been changed to Reset or will automatically reset every 24 hours at midnight if Save Performance Data Daily is set to Enable.

DCV Utilization

The amount of time the equipment has provided Demand Controlled Ventilation as a percentage of the equipment runtime above. This value will continue to accumulate runtime until Performance Data has been changed to Reset or will automatically reset every 24 hours at midnight if Save Performance Data Daily is set to Enable.

Unocc Free Cool Utilization

The amount of time the equipment has provided Free Cooling while unoccupied as a percentage of the equipment runtime above. This value will continue to accumulate runtime until Performance Data has been changed to Reset or will automatically reset every 24 hours at midnight if Save Performance Data Daily is set to Enable.

Part Load Cooling Utilization

The amount of time the equipment has operated in the cooling mode but at less than 100% full cooling capacity as a percentage of the equipment runtime above. This value will continue to accumulate runtime until Performance Data has been changed to Reset or will automatically reset every 24 hours at midnight if Save Performance Data Daily is set to Enable.

Full Load Cooling Utilization

The amount of time the equipment has operated in the cooling mode at 100% full cooling capacity as a percentage of the equipment runtime above. This value will continue to accumulate runtime until Performance Data has been changed to Reset or will automatically reset every 24 hours at midnight if Save Performance Data Daily is set to Enable.

Heating Utilization

The amount of time the equipment has operated in the heating mode as a percentage of the equipment runtime above. This value will continue to accumulate runtime until Performance Data has been changed to Reset or will automatically reset every 24 hours at midnight if Save Performance Data Daily is set to Enable.

Recorded High OAT

The highest value of OAT noted since the last reset occurred. This value will continue to update until Performance Data has been changed to Reset or will automatically reset every 24 hours at midnight if Save Performance Data Daily is set to Enable.

Recorded Low OAT

The lowest value of OAT noted since the last reset occurred. This value will continue to update until Performance Data has been changed to Reset or will automatically reset every 24 hours at midnight if Save Performance Data Daily is set to Enable

Performance Data

Indicates the mode that is currently in effect. This point is used to reset all of the above performance data manually at any time.

Range = Collect/Reset Default = Collect

Historical Performance Data

The RTU Open collects historical performance every time the performance data above has been reset.

Save Performance Data Daily

If set to Enable, the control will automatically transfer the Current Performance Data directly to the Historical Performance Data values for each entry once every 24 hours at midnight. All Historical data will only be available for viewing for the next 24 hours. Also, all current performance data will be reset after the data has been transferred.

Range = Disable/Enable Default = Enable

Equipment Runtime

The value of the equipment runtime when the current performance data was last reset.

Economizer Utilization

The value of the Economizer Utilization when the current performance data was last reset.

DCV Utilization

The value of the DCV Utilization when the current performance data was last reset.

Unocc Free Cool Utilization

The value of the Unocc Free Cool Utilization when the current performance data was last reset.

Part Load Cooling Utilization

The value of the Part Load Cooling Utilization when the current performance data was last reset.

Full Load Cooling Utilization

The value of the Full Load Cooling Utilization when the current performance data was last reset.

Heating Utilization

The value of the Heating Utilization when the current performance data was last reset.

Previous High OAT

The value of the Recorded High OAT when the current performance data was last reset.

Previous Low OAT

The value of the Recorded Low OAT when the current performance data was last reset.

Third Party Networking

Third party communication and networking troubleshooting should be done by or with assistance from the front end 3rd party technician. A Module Status Report (Modstat) can be run from the BACview[6] or Virtual BACview (see Table 5 to perform). This lists information about the board status and networking state. For basic troubleshooting, see Table 6. Refer to the *RTU Open v3 Integration Guide* for additional information.

Table 5 – Manufacture Date

When troubleshooting, you may need to know a control module's manufacture date.

Obtain the manufacture date from a...	Notes
Module status report (modstat)	To obtain a modstat with BACview[6]: 1. Press Function (FN) key and hold. 2. Then press period (.) 3. Release both buttons. The report shows the date under **Main board hardware**.
Sticker on the control board "Serial No: ORTYMxxxxN" (Bar Coded & Typed Number)	The serial numbers are unique and contain embedded information: **"ORT"** – These first three digits are unique to RTU Open and are used as an identifier. **"YM"** – These two digits identify the last digit of the year and month (in hex, A=10/Oct) of manufacture. "74" would represent a date of manufacture of "April 2007". "**xxxx**" – These four digits represent the sequential number of units produced for a given product for the mentioned manufacturing time period. **"N"** – This final digit represents the decade and toggles between "N" and "M" every ten years.

Table 6 – Basic Protocol Troubleshooting

Problem	Possible cause	Corrective action
No communication with 3rd party vendor	Incorrect settings on SW1, SW2 and SW3	Verify and correct switch settings. Cycle power to RTU Open after changing switch settings.
	RS485 Port has no voltage output (check with RTU Open disconnected from RS485 communication bus): • Bacnet @ 9600/19.2K – .01 to .045vdc • Bacnet @ 38.4K – .06 to .09vdc • Bacnet @ 76.8K – .1vdc • Modbus @ 9600 – 76.8K – .124vdc • N2 @ 9600 – .124vdc	Verify RTU Open has correct power supply. Possible bad driver on board. Check RS485 bus for external voltage before reconnecting to the bus.
	Verify devices are daisy chained and repeaters and bias terminators are correctly installed.	Check 3rd party vendor RS485 communication wiring guidelines and troubleshooting procedures.

APPENDIX A - USER INTERFACE MENUS

Field Assistant Navigation

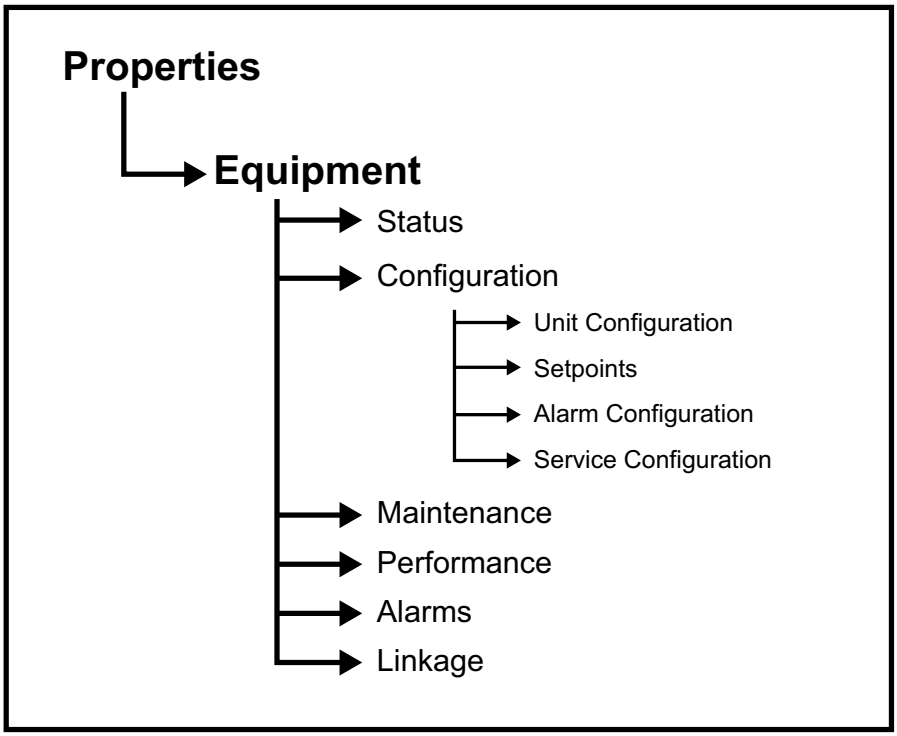

C13648

BACview Navigation

NOTE: The Tables in Appendix A describe parameters of each of the menu levels shown below.

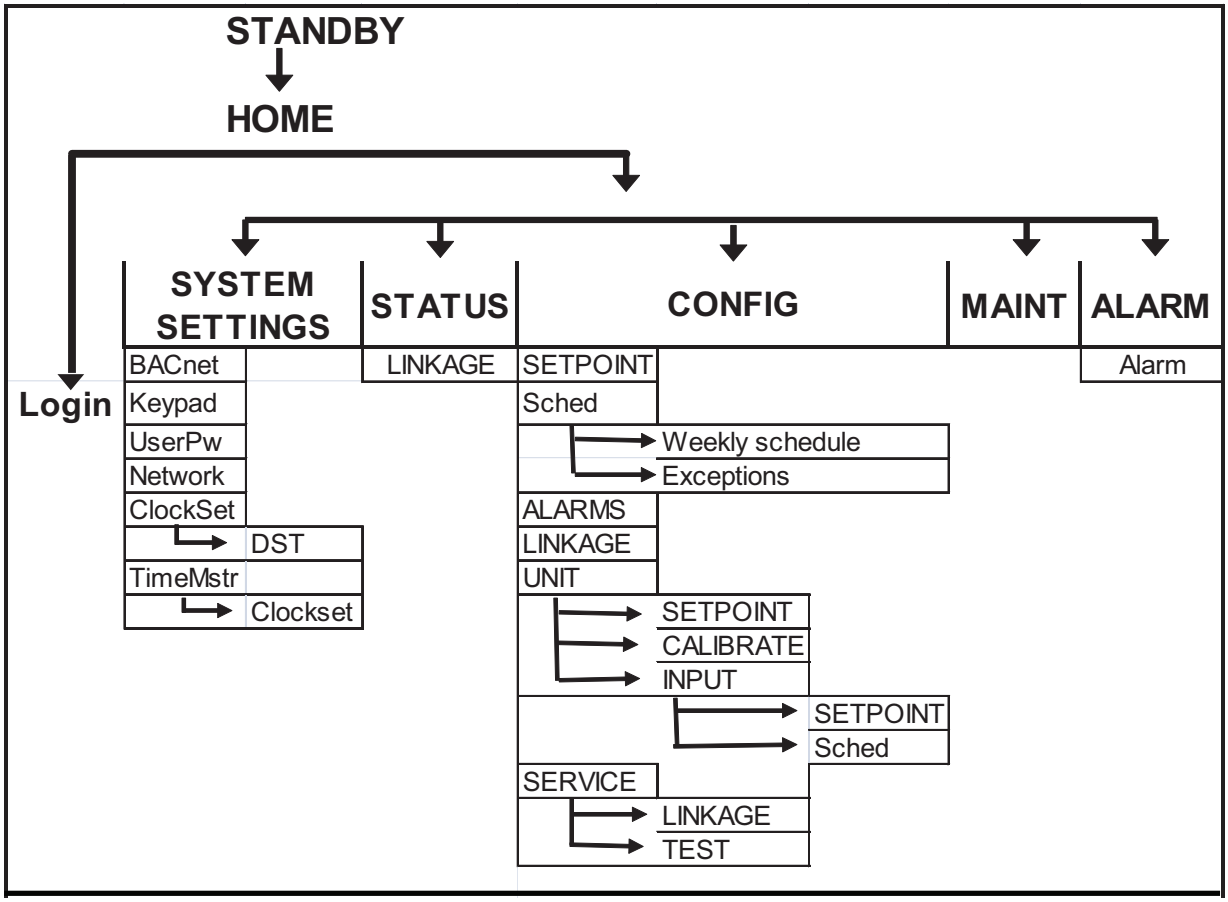

Modstat screen only reached by (FN + .)

C12771

APPENDIX A - USER INTERFACE MENUS (CON'T)

System Settings Menu

BACview Menu	POINT NAME	BACnet Object	RANGE	DEFAULT	Field Assistant Menu
STANDBY	**RTU Open**				BACview Only
	System Mode	run_status	1=Off 2=Fan Only 3=Economizer 4=Cooling 5=Heating 6=Dehumidification 7=Test 8=Shutdown 9=Unocc Free Cooling (NTFC) 10=Fire Shutdown 11=IAQ Override 12=Pre–OCC Purge 13=IGC Override		
	Space Temperature	space_temp	xxx °F		
	Press any key to activate				
LOGIN/LOGOUT	Admin or User Password		****	User: 0000 Admin: 1111	
HOME	Select function below				
HOME> **SYSTEM SETTINGS>**	SYSTEM SETTINGS				
BACnet	BACnet Device Instance:		xxxxxxx	1610100	
	Base BACnet Device ID:		xxxxxxx	1610100	
	Autogenerate Device ID?		Y/N	Y	
Keypad	Keypad Configuration				
	Inactivity Timeout:		1–255 minutes	10	
	BACnet Write Priority:		0–16	0	
UserPw	View/Set User				
	Password:		****	0000	
NETWORK	NETWORK				
	Max Masters	this_device/64	1–127	127	
	Max Info Frames	this_device/63	1–999	10	
	APDU Timeout (ms)	this_device/11	1–10000	3000	
	APDU Retries	this_device/73	1–10	3	
	MS/TP Baud Rate	this_device/4161(1)	9600–76800	76800	
ClockSet	Set Current Time/Date (24 hr clock)				
	Time (hh:mm:ss):				
	Date (dd–mm–yy):				
DST	DST				
	Start Time:				
	Amount:				
	Entry #				
	Beg (mm–dd–yy)				
	End (mm–dd–yy)				
TimeMstr	BACnet Time Master				
	Time Sync Mode		No Broadcast Local Broadcast Global Broadcast	No Broadcast	
	Time Sync Interval		1–9999 minutes	5	

APPENDIX A - USER INTERFACE MENUS (CON'T)

Status Menus

BACview Menu	POINT NAME	BACnet Object	RANGE	DEFAULT	Field Assistant Menu
			STATUS		
HOME>STATUS	Equipment Status	mode_status	1=Disabled 2=Test 3=Run		**Properties>Equipment> Status**
	System Mode	run_status	1=Off 2=Fan Only 3=Economizer 4=Cooling 5=Heating 6=Dehumidification 7=Test 8=Shutdown 9=Unocc Free Cooling (NTFC) 10=Fire Shutdown 11=IAQ Override 12=Pre–occ Purge 13=IGC Override		
	Supply Fan Status	sfan_status	Off/Running		
	Fan Speed	fan_run	1=Off 2=Low 3=Med 4=High 5=On		
	Supply Fan VFD	vfd_output	0–100%		
	Space Temperature – Prime Variable	space_temp	xxx °F		
	Supply Air Temperature	sa_temp	xxx °F		
	Outdoor Air Temperature	oa_temp	xxx °F		
	Space Relative Humidity	space_rh	0–100 %		
	Indoor Air CO2	iaq	0–5000 ppm		
	Outdoor Air CO2	oaq	0–5000 ppm		
	Economizer Output	econ_output	0–100 %open		
	Shutdown	shutdown	Inactive/Active		
			LINKAGE		
HOME>STATUS> LINKAGE	AIRSIDE LINKAGE				**Properties>Equipment> Linkage**
	Linkage Collector	link_collector			
	Airside Linkage Status	a_link_status	Not Active/Active		
	Air Source Mode	link_ahu_mode	1=Off 2=Warmup 3=Heating 4=Cooling 5=Freecool 6=Pressure 7=EVAC 8=Vent		
	Air Source Supply Air Temp	link_sat	xxx °F		
	Air Source Outdoor Air Temp	link_ahu_oat	xxx °F		
	If "Airside Linkage Status" is "Active," the following are shown as applicable:				
	Number of Providers	link_collector/4602	xx		(BACview only)
	Occupancy Status	link_occ	Unoccupied/Occupied		
	Space Temperature	link_spt	xxx °F		
	Occupied Cooling Setpoint	link_occ_cl_stpt	55–80 °F		
	Occupied Heating Setpoint	link_occ_ht_stpt	55–80 °F		
	Unoccupied Cooling Setpoint	link_unocc_cl_stpt	75–130 °F		
	Unoccupied Heating Setpoint	link_unocc_ht_stpt	55–85 °F		
	Indoor Air CO2 (ppm)	link_iaq	xxxx ppm		
	Space Relative Humidity	link_sprh	xxx %		
	Linkage Max Damper Position	link_max_dmpr	0–100%		
	Linkage Optimal Start	a_link_opt_start	Inactive/Active		

APPENDIX A - USER INTERFACE MENUS (CON'T)

Configuration Menus

BACview Menu	POINT NAME	BACnet Object	RANGE	DEFAULT	Field Assistant Menu
			UNIT CONFIGURATION		
HOME>CONFIG>UNIT	UNIT CONFIGURATION				Properties>Equipment>Configuration>Unit Configuration
	Fan Mode	fan_mode	1=Auto 2=Continuous 3=Always On	Continuous	
	Power Fail Restart Delay	start_delay	0–30 sec	5	
	Fan Off Delay	fan_delay_off	5–60 sec	30	
	Minimum Cooling SAT	sat_cl_min	45–75 °F	50	
	Maximum Heating SAT	sat_ht_max	85–150° F	120	
	Vent Dmpr Pos / DCV Min Pos	econ_min	0–100 %Open	20	
	Economizer Purge Min Pos	econ_purge_min	0–100 %Open	40	
	Low Fan Econ Min Pos	econ_min_2	0–100 %Open	33	
	DCV Max Vent Damper Pos	iaq_dpr_max	0–75 %Open	50	
	Supply Fan Service Alarm Timer	sfan_service_hrs	0–9999 hr	600	
	Comp 1 Service Alarm Timer	comp1_service_hrs	0–9999 hr	0	
	Comp 2 Service Alarm Timer	comp2_service_hrs	0–9999 hr	0	
	Filter Service Alarm Timer	filter_service_hrs	0–9999 hr	600	
	Door Alarm Delay	door_alarm_delay	0–9999 sec	60	
	Pushbutton Override	pb_enable	Disable/Enable	Enable	
	Setpoint Adjustment	stpt_adj_enable	Disable/Enable	Enable	
	Setpoint Adjustment Range	stpt_adj_range	+/– 0–5 °F	5	
	Cooling Lockout Temperature	oat_cl_lockout	0–80° F	45	
	Economizer High OAT Lockout Temp	oat_ec_lockout	55–80° F	75	
	Heating Lockout Temperature	oat_ht_lockout	35–150° F	65	
	Pre Occupancy Purge	preocc_purge	Disable/Enable	Disable	
	Purge Time	purge_time	0–240 min	60	
	Unocc Free Cool	ntfc_ena	Disable/Enable	Disable	
	Min Setpoint Separation	min_stpt_sep	2–10 °F	5	
	Occupancy Source	occ_source	1=Always occupied 2=BACnet Schedule 3=BAS On/Off 4=Remote Occ Input	Always Occupied	
HOME>CONFIG>UNIT>INPUT	INPUT CONFIGURATION				Properties>Equipment>Configuration>Unit Configuration
	Input 1 Function	ai1_function	1=No Sensor 2=IAO Sensor 3=OAQ Sensor 4=Space RH Sensor	No Sensor	
	Input 2 Function	ai2_function	1=No Sensor 2=IAO Sensor 3=OAQ Sensor 4=Space RH Sensor	1 (No FIOP) 2 (FIOP)	
	Input 3 Function	di3_function	1=No Function 2=Compressor Safety 3=Fan Status 4=Filter Status 5=Remote Occupancy 6=Door Contact	Compressor Safety	
	Input 3 Switch Configuration	di3_type	N/O N/C	N/O	
	Input 5 Function	di5_function	1=No Function 2=Fire Shutdown 3=Fan Status 4=Filter Status 5=Remote Occupancy 6=Door Contact	Fire Shutdown	
	Input 5 Switch Configuration	di5_type	N/O N/C	N/C	
	Input 8 Function	di8_function	1=No Function 2=Enthalpy Switch 3=Fan Status 4=Filter Status 5=Remote Occupancy 6=Door Contact	1 (No FIOP) 2 (FIOP)	
	Input 8 Switch Configuration	di8_type	N/O N/C	N/O	
	Input 9 Function	di9_function	1=No Function 2=Humidistat 3=Fan Status 4=Filter Status 5=Remote Occupancy 6=Door Contact 7=IGC Override	Humidistat	
	Input 9 Switch Configuration	di9_type	N/O N/C	N/O	
	Space sensor type	spt_type	1=T55 2=T56 (use for T59) 3=SPT Sensor 4=None	T55	
	T5x Override Duration	ovr_dur	0–24 hours	1	

APPENDIX A - USER INTERFACE MENUS (CON'T)

Configuration Menus (con't)

BACview Menu	POINT NAME	BACnet Object	RANGE	DEFAULT	Field Assistant Menu
HOME>CONFIG> UNIT>CALIBRATE	SENSOR CALIBRATION				**Properties>Equipment> Configuration> Unit Configuration**
	Space Temperature	lcl_space_temp			
	Space Temp Calibration	spt_offset	–9.9–10° F	0	
	Space RH	lcl_space_rh	0–100%		
	Space AQ	lcl_space_aq	0–5000ppm		
	Supply Air Temperature	lcl_sa_temp	–56–245° F		
	Supply Air Temp Calibration	sat_offset	–9.9–10° F	0	
	Outdoor Air Temperature	lc_oa_temp	–56–245° F		
	Outdoor Air Temp Calibration	oat_offset	–9.9–10° F	0	
	SETPOINT				
HOME>CONFIG> SETPOINT	Occupied Heating Setpoint	occupied_heat_setpoint	40–90 ° F	70	**Properties>Equipment> Configuration>Setpoints**
	Occupied Cooling Setpoint	occupied_cool_setpoint	55–99 ° F	76	
	Unoccupied Heating Setpoint	unoccupied_heat_set-point	40–90 ° F	55	
	Unoccupied Cooling Setpoint	unoccupied_cool_set-point	45–99 ° F	90	
	Effective Heat Setpoint	effective_heat_setpoint	0–120 ° F		
	Effective Cool Setpoint	effective_cool_setpoint	0–120 ° F		
	Optimal Start (hrs)	optm_start	0–4 hr	1	
	Optimal Start Type	start_type	1=None 2=Learning Adaptive 3=Temp Compensated	Temperature Compensated	
	Heat Start K factor (min/deg)	h_kfactor	0–99	15	
	Cool Start K factor (min/deg)	c_kfactor	0–99	15	
	DCV Max Ctrl Setpoint	iaq_stpt_max	0–9999 ppm	650	
	Power Exhaust Setpoint	pexh_stpt	20–90 %Open	50	
	Occ Relative Humidity Setpoint	occ_dehum_stpt	0–unocc setpoint %rh	60	
	Unocc Relative Humidity Setpoint	unocc_dehum_stpt	30–100 %rh	95	
HOME>CONFIG> Sched	Schedule				(BACview only)
	Weekly schedule		MON–SUN	none	
	Exceptions			none	
	ALARM CONFIGURATION				
HOME>CONFIG> ALARMS	SPACE TEMPERATURE ALARM				**Properties>Equipment> Configuration> Alarm Configuration**
	Occupied Alarm Hysteresis	occ_spt_alrm_hyst	0–20° F	5	
	Alarm Delay (min/deg)	spt_alrm_delay	0–60 minutes	10	
	Unoccupied Low SPT Alarm Limit	uno_spt_alrm_lo_lmt	35–90 ° F	45	
	Unoccupied High SPT Alarm Limit	uno_spt_alrm_hi_lmt	45–100 ° F	95	
	SUPPLY AIR TEMPERATURE ALARM				
	Low SAT Alarm Limit	sat_lo_alrm_lim	15–90 ° F	38	
	High SAT Alarm Limit	sat_hi_alrm_lim	90–175 ° F	160	
	SPACE HUMIDITY ALARM				
	Occupied High RH Alarm Limit (%RH)	sprh_hi_alrm_lim	0–100%rh	70%rh	
	Alarm Delay (min/%RH)	sprh_delay	0–30 min	5 min	
	Unoccupied High RH Alarm Limit (%RH)	unocc_sprh_lmt	0–100%rh	100%rh	
	Low RH Alarm Limit (%RH)	sprh_lo_alrm_lim	0–100%rh	30%rh	
	IAQ / VENTILATION ALARM				
	Occupied High CO2 Alarm Limit (ppm)	iaq_occ_hi_lmt	0–9999 ppm	1200	

APPENDIX A - USER INTERFACE MENUS (CON'T)

Alarm Menus

BACview Menu	POINT NAME	BACnet Object	RANGE	DEFAULT	Field Assistant Menu
		ALARMS			
HOME>ALARM	CURRENT ALARMS				**Properties>Equipment>Alarms**
	Safety Chain	safety_alarm	Normal/Alarm		
	Fire/Smoke Shutdown	fire_alarm	Normal/Alarm		
	Gas Valve	igc_alarm	Normal/Alarm		
	Supply Fan	sfan_fail_alarm	Normal/Alarm		
	Supply Fan in Hand	sfan_hand_alarm	Normal/Alarm		
	Compressor Status	comp_alarm	Normal/Alarm		
	SPT Sensor	spt_sensor_fail	Normal/Alarm		
	Space Temp Sensor	spt_fail	Normal/Alarm		
	Supply Air Temperature	sat_alarm	Normal/Alarm		
	Supply Air Temp Sensor	loc_sat_sensor_fail	Normal/Alarm		
	Local OAT Sensor	loc_oat_sensor_fail	Normal/Alarm		
	Indoor Air Quality	iaq_alarm	Normal/Alarm		
	Outdoor Air Temp Sensor	oat_alarm	Normal/Alarm		
	Space Relative Humidity	sprh_hi_alarm	Normal/Alarm		
	Space Relative Humidity Sensor	sprh_sensor_fail	Normal/Alarm		
	Indoor Air Quality Sensor	iaq_sensor_alarm	Normal/Alarm		
	Outdoor Air Quality Sensor	oaq_fail	Normal/Alarm		
	Space Temperature	spt_alrm_status	Normal/Alarm		
	Alarming Temperature	spt_alrm_temp	xxx ° F		
	Alarm Limit Exceeded	spt_alrm_lmt	xxx ° F		
	Setpoint Slider	slidepot_alarm	Normal/Alarm		
	Switch Configuration	di_cfg_alarm	Normal/Alarm		
	Analog Input Configuration	ai_cfg_alarm	Normal/Alarm		
	Supply Fan Runtime	sfan_rntm_alarm	Normal/Alarm		
	Compressor 1 Runtime	comp1_rntm_alarm	Normal/Alarm		
	Compressor 2 Runtime	comp2_rntm_alarm	Normal/Alarm		
	Filter	filter_alarm	Clean/Dirty		
	Airside Linkage Alarm	air_linkage_fail	Normal/Alarm		
HOME>ALARM>Alarm	Module Event History (100 most recent)				(BACview only)
	Active Alarms	Buffer			
	Active Faults	Buffer			
	Returned–To–Normal (RTN)	Buffer			
	Manually Cleared (CLR)	Buffer			

APPENDIX A - USER INTERFACE MENUS (CON'T)

Service Menu

BACview Menu	POINT NAME	BACnet Object	RANGE	DEFAULT	Field Assistant Menu
			SERVICE		
HOME>CONFIG> SERVICE	SERVICE CONFIGURATION				**Properties>Equipment> Configuration> Service Configuration**
	Unit Type	unit_type	1=Heat/Cool 2=LC WeatherExpert 3=HP O/B Ctrl 4=HP Y1/W1 Ctrl	2=LC WeatherExpert (3 stage/2 compressor)	
	Compressor Stages	comp_stages	One Stage/ Two Stage/ Three Stage	Three Stage (sizes 07–26) factory configured	
	Face Split Coil	face_split	Yes/No	Yes	
	Economizer Exists	econ_exist	No/Yes	No (No FIOP) Yes (FIOP)	
	Fan Control	fan_type	1=Single Speed 2=Two Speed 3=Variable Speed	3=Variable Speed	
	VFD Input	vfd_in_type	0–10Vdc/2–10Vdc	2–10Vdc	
	Max VFD Output	max_vfd_spd	15–100%	100	
	Min VFD Output	min_vfd_spd	15–100%	40	
	Dehum Min VFD Output	dehum_min_vfd	50–100%	100	
	Stage 1 SAT Stpt	stg_1_sat	40–90°F	57	
	Stage 2 SAT Stpt	stg_2_sat	40–90°F	57	
	Stage 3 SAT Stpt	stg_3_sat	40–90°F	56	
	Reversing Valve Type	rev_vlv_type	O output type/B output type	O output type	
	Heat Type	heat_type	Electric/Gas	Gas (48 Series Units) Electric (50 Series Units)	
	Number of Heat Stages	heat_stages	1 / 2 / 0 (no heat)	0 (50 series cooling only units) 1 (50LC, Low Heat Sizes 07–14, Med Heat Sizes 07–09 and High Heat for Size 07) 2 (50LC Low Heat Sizes 17–26, Med Heat Sizes 12–26, High Heat Sizes 08–26 and All LC Gas units Sizes 07–27)	
	Continuous Occupied Exhaust	occ_exh	No/Yes	No	
	RH Control	rh_enable	Disable/Enable	Disable Enable (units with Humidi–MiZer option)	
	DCV Control	dcv_enable	Disable/Enable	Disable	
	Indoor CO2 Sensor Value @ Min mA	iaq_ref_lo_ppm	0–9999ppm	0	
	Indoor CO2 Sensor Value @ Max mA	iaq_ref_hi_ppm	0–9999ppm	2000	
	Outdoor CO2 Sensor Value @ Min mA	oaq_ref_lo_ppm	0–9999ppm	0	
	Outdoor CO2 Sensor Value @ Max mA	oaq_ref_hi_ppm	0–9999ppm	2000	
(Field Assistant Only)	System Space Temperature	system_spt			
	System Space RH	system_rh			
	System Space AQ	system_iaq			
	System Outdoor AQ	system_oaq			
	System Cool Demand Level	cool_demand_level	0–3	0	
	System Heat Demand Level	heat_demand_level	0–3	0	
	System Outdoor Air Temperature	system_oat			
HOME>CONFIG> SERVICE>TEST	SERVICE TEST				
	Service Test	test_enable	Disable/Enable	Disable	
	Fan Test	fan_test	Disable/Enable	Disable	
	High Speed Fan Test	hi_spd_test	Disable/Enable	Disable	
	Compressor 1 Test	comp1_test	Disable/Enable	Disable	
	Compressor 2 Test	comp2_test	Disable/Enable	Disable	
	Heat 1 Test	heat1_test	Disable/Enable	Disable	
	Heat 2 Test	heat2_test	Disable/Enable	Disable	
	Reversing Valve Test	rev_vlv_test	Disable/Enable	Disable	
	Dehumidification Test	dehum_test	Disable/Enable	Disable	
	Power Exhaust Test	pexh_test	Disable/Enable	Disable	
	Economizer Test	econ_test	0–100 %Open	0	
	VFD Speed Test	vfd_spd_test	0–100%	0	

APPENDIX A - USER INTERFACE MENUS (CON'T)

Maintenance Menu

BACview Menu	POINT NAME	BACnet Object	RANGE	DEFAULT	Field Assistant Menu
		MAINTENANCE			
HOME>MAINT		UNIT MAINTENANCE			Properties>Equipment>Maintenance
	Occupancy Status	occ_status	Occupied/Unoccupied		
	Temp Compensated Start –Or– Learning Adaptive Start	tcs_status –Or– aos_status	Inactive/Active		
	Pre Occupancy Purge	purge	Inactive/Active		
	Space Temp Sensor	spt_status	1=Sensor Failure 2=SPT Sensor 3=T55/T56 4=Network 5=Airside Linkage 6=Locked Value		
	Setpoint Adjustment	stpt_adj	x °F		
	Effective Heat Setpoint	eff_ht_stpt	x °F		
	Effective Cool Setpoint	eff_ci_stpt	x °F		
	Relative Humidity Source	rh_source	1=N/A 2=Local 3=Network 4=Linkage 5=Locked Value 6=Linkage&Local		
	IAQ Source	iaq_source	1=N/A 2=Local 3=Network 4=Linkage 5=Locked Value 6=Linkage&Local		
	OAQ Source	oaq_source	1=N/A 2=Local 3=Network 4=Linkage 5=Locked Value 6=Linkage&Local		
	Outdoor Air Temperature Source	oat_status	1=N/A 2=Local 3=Network 4=Linkage 5=Locked Value		
	System Cooling Demand	cool_demand_level	0–3		
	System Heating Demand	heat_demand_level	0–3		
	Safety Chain Feedback	safety_status	Off/Run Enabled		
	Fire Shutdown Status	firedown_status	Run Enabled/Shutdown		
	Compressor Safety Status	comp_status	Normal/Trouble		
	Calculated Min Econ Pos	cal_min_econ_pos	0–100%		
	Calculated PE Setpoint	cal_pe_stpt	0–100%		
	Active Compressor Stages	comp_run	0–2		
	Active Heat Stages	heat_run	0–2		
	Enthalpy Status	enthalpy_status	High/Low		
	Enthalpy BACnet	oae	High/Low	High/Low	
	Humidistat Input Status	humstat_status	High/Low		
	Filter Status	filter_status	Clean/Dirty		
	Door Contact Status	door_contact_status	Off/On		
	IGC Override	igcovr_status	Off/On		
	Reset Supply Fan Runtime Alarm	sfan_rntm_clr	Run/Clear	Run	
	Reset Comp 1 Runtime Alarm	comp1_rntm_clr	Run/Clear	Run	
	Reset Comp 2 Runtime Alarm	comp2_rntm_clr	Run/Clear	Run	
	Reset Filter Runtime Alarm	filter_rntm_clr	Off/On	Off	
		OCCUPANCY MAINTENANCE			
	BAS On / Off	keypad_ovrde	1=Inactive 2=Occupied 3=Unoccupied	Inactive	
	Schedules	schedule	Unoccupied/Occupied		
	Pushbutton Override	pb_status	Off/Active		
	Occupancy Contact	occ_contact_status	Off/On		
	Override Time Remaining	ovrde_time	0–240 min		
		RUNTIME MAINTENANCE			
	Supply Fan Runtime	sfan_rntm	xxxxx hr		
	Compressor 1 Runtime	comp1_rntm	xxxxx hr		
	Compressor 2 Runtime	comp2_rntm	xxxxx hr		
	Filter Runtime	filter_rntm	xxxxx hr		

APPENDIX A - USER INTERFACE MENUS (CON'T)

Performance

BACview Menu	POINT NAME	BACnet Object	RANGE	DEFAULT	Field Assistant Menu
PEFORMANCE					
HOME>MAINT>PERF	CURRENT PERFORMANCE DATA				Properties>Equipment> Maintenance> Performance
	Equipment Runtime	equip_rntm	xxxxx.xhrs		
	Economizer Utilization	econ_util	xxx.x%		
	DCV Utilization	dcy_util	xxx.x%		
	Unocc Free Cool Utilization	ntfc_util	xxx.x%		
	Part Load Cooling Utilization	partlkoad_cool_util	xxx.x%		
	Full Load Cooling Utilization	cool_util	xxx.x%		
	Heating Utilization	heat_util	xxx.x%		
	Recorded High OAT	rec_hi_oat	x°F		
	Recorded Low OAT	rec_lo_oat	x°F		
	Performance Data		Collect/Reset	Collect	
	HISTORICAL PERFORMANCE DATA				
	Save Performance Daily	save_perf_data	Disable/Enable	Disable	
	Equipment Runtime	pre_equip_rntm	xxxxx.xhrs		
	Economizer Utilization	pre_econ_util	xxx.x%		
	DCV Utilization	pre_dcv_util	xxx.x%		
	Unocc Free Cool Utilization	pre_ntfc_util	xxx.x%		
	Part Load Cooling Utilization	pre_pl_cool_util	xxx.x%		
	Full Load Cooling Utilization	pre_cool_util	xxx.x%		
	Heating Utilization	pre_heat_util	xxx.x%		
	Recorded High OAT	pre_hi_oat	x°F		
	Recorded Low OAT	pre_lo_oat	x°F		

APPENDIX B - THIRD PARTY POINTS LIST

RTU Open Protocol Maps

Point Name	Point Access	Units	BACnet Info		Modbus Info		N2 Info		LonWorks Info	
			BACnet Point Name	BACnet Object ID	Modbus Register Type	Modbus Register #	N2 Network Point Type	N2 Network Point Address	SNVT Type	SNVT Name
Active Compressor Stages	Read Only	N/A	comp_run	AV:2020	float value	40031	ADF	10	SNVT_count_inc (9)	nvoCompStages
Active Heat Stages	Read Only	N	heat_run	AV:2003	float value	40033	ADF	11	SNVT_count_inc (9)	nvoHeatStages
Air Source Outdoor Air Temp	Read Only	°F	link_ahu_oat	AV:2609						
Air Source Supply Air Temp	Read Only	°F	link_sat	AV:2608						
Compressor 1 Runtime	Read Only	hr	comp1_rntm	AV:2017						
Compressor 1 Service Alarm Timer	R/W	hr	comp1_service_hrs	AV:83006						
Compressor 2 Runtime	Read Only	hr	comp2_rntm	AV:2018						
Compressor 2 Service Alarm Timer	R/W	hr	comp2_service_hrs	AV:83007						
Cooling Lockout Temperature	R/W	°F	oat_cl_lockout	AV:9002	float value	40043	ADF	16	SNVT_temp_p (105)	nviCoolLckTemp
DCV Max Ctrl Setpoint	R/W	ppm	iaq_stpt_max	AV:3013	float value	40045	ADF	17	SNVT_ppm (29)	nviDCVMaxPPM
DCV Max Vent Damper Pos	R/W	%Open	iaq_dpr_max	AV:9011	float value	40047	ADF	18	SNVT_lev_percent (81)	nviDCVMaxPos
Economizer High OAT Lockout Temp	R/W	°F	oat_ec_lockout	AV:9008						
Economizer Output	Read Only	%Open	econ_output	AV:2022	float value	40051	ADF	20	SNVT_lev_percent (81)	nvoEconOutput
Economizer Purge Min Pos	R/W	%Open	econ_purge_min	AV:9029	float value	40075	ADF	5	SNVT_lev_percent (81)	nviEconPurgeMin
Economizer Test	R/W	%Open	econ_test	AV:81001	float value	40053	ADF	21	SNVT_temp_p (105)	
Effective Cool Setpoint	Read Only	°F	eff_cl_stpt	AV:3005	float value	40055	ADF	22	SNVT_temp_p (105)	nvoEffCoolSP
Effective Heat Setpoint	Read Only	°F	eff_ht_stpt	AV:3006	float value	40057	ADF	23	SNVT_temp_p (105)	nvoEffHeatSP
Fan Off Delay	R/W	sec	fan_delay_off	AV:9024						
Filter Runtime	Read Only	hr	filter_rntm	AV:2015						
Filter Service Alarm Timer	R/W	hr	filter_service_hrs	AV:2019	float value	40067	ADF	28	SNVT_time_hour (124)	nviFilterAlmTime
Heating Lockout Temperature	R/W	°F	oat_ht_lockout	AV:9003	float value	40069	ADF	29	SNVT_temp_p (105)	nviHeatLckTemp
Indoor Air Quality CO2 (ppm)	Read Only	ppm	iaq	AV:1009	float value	40073	ADF	31	SNVT_ppm (29)	nvoIAQ
Linkage Max Damper Position	Read Only	%	link_max_dmpr	AV:2611						
Low Fan Econ Min Pos	R/W	%Open	econ_min_2	AV:9030	float value	40089	ADF	32	SNVT_lev_percent (81)	nviLowFanEconMin
Maximum Heating SAT	R/W	°F	sat_ht_max	AV:83004						
Minimum Cooling SAT	R/W	°F	sat_cl_min	AV:83003						
Occ Relative Humidity Setpoint	R/W	%rh	occ_dehum_stpt	AV:3011	float value	40083	ADF	36	SNVT_lev_percent (81)	nviOccRHSP
Optimal Start	R/W	hr	optm_start	AV:9026	float value	40147	ADF	61	SNVT_time_hour (124)	nviOptimalStart
Outdoor Air Quality CO2 (ppm)	Read Only	ppm	oaq	AV:1012	float value	40085	ADF	37	SNVT_ppm (29)	nvoOAQ
Outdoor Air Temperature	Read Only	°F	oa_temp	AV:1003	float value	40087	ADF	38	SNVT_temp_p (105)	nvoOAT
Override Time Remaining	Read Only	min	ovrde_time	AV:2016	float value	40093	ADF	41	SNVT_time_min (123)	nvoOvrTimeRemain
Power Exhaust Setpoint	R/W	%Open	pexh_stpt	AV:3010	float value	40097	ADF	43	SNVT_lev_percent (81)	nviPwrExhSP
Power Fail Restart Delay	R/W	sec	start_delay	AV:9007	float value	40127	ADF	58	SNVT_time_sec (107)	nviUnitStartDly
Setpoint / Cooling Occupied Setpoint	R/W	°F	occ_cl_stpt	AV:3001	float value	40009	ADF	4	SNVT_temp_p (105)	nviOccCoolSP
Setpoint / Cooling Unoccupied Setpoint	R/W	°F	unocc_cl_stpt	AV:3003	float value	40015	ADF	7	SNVT_temp_p (105)	nviUnoccCoolSP
Setpoint / Heating Occupied Setpoint	R/W	°F	occ_ht_stpt	AV:3002	float value	40019	ADF	9	SNVT_temp_p (105)	nviOccHeatSP
Setpoint / Heating Unoccupied Setpoint	R/W	°F	unocc_ht_stpt	AV:3004	float value	40017	ADF	8	SNVT_temp_p (105)	nviUnoccHeatSP
Setpoint Adjustment	Read Only	°F	stpt_adj	AV:1006	float value	40099	ADF	44	SNVT_temp_p (105)	nvoSPAdjust
Setpoint Adjustment Range	R/W	°^F	stpt_adj_range	AV:9015	float value	40101	ADF	45	SNVT_temp_p (105)	nviSPAdjRange
Space Relative Humidity	Read Only	%rh	space_rh	AV:1011	float value	40103	ADF	46	SNVT_lev_percent (81)	nvoSpaceRH
Space Temp / Override Time Remaining	R/W	min	override_time_remaining	AV:1						
Space Temperature Offset Pot	Read Only	°F	stpt_adj_offset	AV:91006						
Space Temperature - Prime Variable	Read Only	°F	space_temp	AV:2007	float value	40107	ADF	48	SNVT_temp_p (105)	nvoSpaceTemp
Stage 1 SAT Stpt	R/W	°F	stg_1_sat	AV:83008						
Stage 2 SAT Stpt	R/W	°F	stg_2_sat	AV:83009						
Stage 3 SAT Stpt	R/W	°F	stg_3_sat	AV:83010						
Supply Air Temperature	Read Only	°F	sa_temp	AV:1008	float value	40109	ADF	49	SNVT_temp_p (105)	nvoSAT
Supply Fan Runtime	Read Only	hr	sfan_rntm	AV:2014						

APPENDIX B - THIRD PARTY POINTS LIST (CON'T)

RTU Open Protocol Maps

Point Name	Point Access	Units	BACnet Info		Modbus Info		N2 Info		LonWorks Info	
			BACnet Point Name	BACnet Object ID	Modbus Register Type	Modbus Register #	N2 Network Point Type	N2 Network Point Address	SNVT Type	SNVT Name
Supply Fan Service Alarm Timer	R/W	hr	sfan_service_hrs	AV:83005						
Supply Fan VFD	Read Only	%	vfd_output	AV:2027						
System Cooling Demand Level	Read Only	N/A	cool_demand_level	AV:9006						
System Heating Demand Level	Read Only	N/A	heat_demand_level	AV:9036						
System Outdoor Air Temperature	R/W	°F	system_oat	AV:1901	float value	40119	ADF	54	SNVT_temp_p (105)	nviSysOAT
System Outdoor AQ	R/W	°F	system_oaq	AV:1908	float value	40155	ADF	63		
System Space AQ	R/W	N/A	system_iaq	AV:1903	float value	40149	ADF	39	SNVT_ppm (29)	nviSysSpaceAQ
System Space RH	R/W	%	system_rh	AV:1904	float value	40151	ADF	40	SNVT_lev_percent (81)	nviSysSpaceRH
System Space Temperature	R/W	°F	system_spt	AV:1902	float value	40123	ADF	56	SNVT_temp_p (105)	nviSysSpaceTemp
T5x Override Duration	R/W	hr	ovr_dur	AV:9023						
Unocc Relative Humidity Setpoint	R/W	%rh	unocc_dehum_stpt	AV:3012	float value	40129	ADF	59	SNVT_lev_percent (81)	nviUnoccRHSP
Vent Dmpr Pos / DCV Min Pos	R/W	%Open	econ_min	AV:9005	float value	40131	ADF	60	SNVT_lev_percent (81)	nviDCVMinPos
Airside Linkage	Read Only	0 = Normal 1 = Alarm	air_linkage_fail	BV:7030						
Analog Input Configuration	Read Only	0 = Normal 1 = Alarm	ai_cfg_alarm	BV:7026						
Compressor 1 Runtime	Read Only	0 = Normal 1 = Alarm	comp1_rntm_alarm	BV:7014						
Compressor 2 Runtime	Read Only	0 = Normal 1 = Alarm	comp2_rntm_alarm	BV:7015						
Compressor Safety Status	Read Only	0 = Normal 1 = Trouble	comp_status	BV:1008						
Compressor Status	Read Only	0 = Normal 1 = Alarm	comp_alarm	BV:7013	discrete in	10030	BI	30	SNVT_switch (95)	nvoCompSafety
Continuous Occupied Exhaust	R/W	0 = No 1 = Yes	occ_exh	BV:9002						
Dehumidification	Read Only	0 = Inactive 1 = Active	dehum	BV:2006	discrete in	10009	BI	9	SNVT_switch (95)	nvoDehumRelay
Door Contact Status	Read Only	0 = Off 1 = On	door_contact_status	BV:1010						
Economizer Exists	R/W	0 = No 1 = Yes	econ_exist	BV:99001						
Enthalpy (BACnet)	R/W	0 = High 1 = Low	oae	BV:1901	discrete out	6	BO	6	SNVT_switch (95)	nviSysEnthalpy
Enthalpy Status	Read Only	0 = High 1 = Low	enthalpy_status	BV:1002						
Filter	Read Only	0 = Clean 1 = Dirty	filter_alarm	BV:7017	discrete in	10031	BI	31	SNVT_switch (95)	nvoFilter
Filter Status	Read Only	0 = Clean 1 =Dirty	filter_status	BV:1004						
Fire / Smoke Shutdown	Read Only	0 = Normal 1 = Alarm	fire_alarm	BV:7007	discrete in	10032	BI	32	SNVT_switch (95)	nvoFireShutdown
Fire Shutdown Status	Read Only	0 = Run Enabled 1 = Shutdown	firedown_status	BV:1005						
Gas Valve	Read Only	0 = Normal 1 = Alarm	igc_alarm	BV:7051						
High Space Temperature	Read Only	0 = Normal 1 = Alarm	spt_hi_alarm	BV:7011	discrete in	10035	BI	35	SNVT_switch (95)	nvoHiSpaceTemp
Humidistat Input Status	Read Only	0 = High 1 = Low	humstat_status	BV:1006						
IGC Override	Read Only	0 = Off 1 = Active	igcovr_status	BV:1022						
Indoor Air Quality	Read Only	0 = Normal 1 = Alarm	iaq_alarm	BV:7005	discrete in	10033	BI	33	SNVT_switch (95)	nvoIAQAlm
Indoor Air Quality Sensor	Read Only	0 = Normal 1 = Alarm	iaq_sensor_fail	BV:7039	discrete in	10037	BI	37	SNVT_switch (95)	nvoIAQSensor
Local OAT Sensor	Read Only	0 = Normal 1 = Alarm	loc_oat_sensor_fail	BV:7003						
Low Space Temperature	Read Only	0 = Normal 1 = Alarm	spt_lo_alarm	BV:7012	discrete in	10039	BI	39	SNVT_switch (95)	nvoLoSpaceTemp
Occupancy Contact	Read Only	0 = Off 1 = On	occ_contact_status	BV:1007						
Occupancy Status	Read Only	0 = Unoccupied 1 = Occupied	occ_status	BV:2008	discrete in	10018	BI	18	SNVT_switch (95)	nvoOccStatus

APPENDIX B - THIRD PARTY POINTS LIST (CON'T)

RTU Open Protocol Maps

Point Name	Point Access	Units	BACnet Info		Modbus Info		N2 Info		LonWorks Info	
			BACnet Point Name	BACnet Object ID	Modbus Register Type	Modbus Register #	N2 Network Point Type	N2 Network Point Address	SNVT Type	SNVT Name
Outdoor Air Quality Sensor	Read Only	0 = Normal 1 = Alarm	oaq_fail	BV:7006	discrete in	10041	BI	41	SNVT_switch (95)	nvoOAQSensor
Outdoor Air Temp Sensor	Read Only	0 = Normal 1 = Alarm	oat_fail	BV:7029	discrete in	10027	BI	27		
Reset Comp 1 Runtime Alarm	R/W	0 = Run 1 = Clear	comp1_rntm_clr	BV:7514						
Reset Comp 2 Runtime Alarm	R/W	0 = Run 1 = Clear	comp2_rntm_clr	BV:7515						
Reset Filter Alarm	R/W	0 = Off 1 = On	filter_rntm_clr	BV:7517	discrete out	22	BO	22	SNVT_switch (95)	nviResetFiltAlm
Reset Supply Fan Runtime Alarm	R/W	0 = Run 1 = Clear	sfan_rntm_clr	BV:7510	discrete in	10043	BI	43	SNVT_switch (95)	nvoSafetyChain
Safety Chain	Read Only	0 = Normal 1 = Alarm	safety_alarm	BV:7024						
Safety Chain Feedback	Read Only	0 = Off 1 = On	safety_status	BV:1009						
Schedule	R/W	0 = Unoccupied 1 = Occupied	schedule	BV:8000						
Setpoint Adjustment	R/W	0 = Disable 1 = Enable	stpt_adj_enable	BV:1013	discrete out	26	BO	26	SNVT_switch (95)	nviSPAdjEnable
Setpoint Slider	Read Only	0 = Normal 1 = Alarm	slidepot_alarm	BV:7002						
Shutdown	R/W	0 = Inactive 1 = Active	shutdown	BV:9001						
Space Relative Humidity	Read Only	0 = Normal 1 = Alarm	sprh_hi_alarm	BV:7018	discrete in	10034	BI	34	SNVT_switch (95)	nvoHiSPRHAlm
Space Relative Humidity Sensor	Read Only	0 = Normal 1 = Alarm	sprh_sensor_fail	BV:7022	discrete in	10045	BI	45	SNVT_switch (95)	nvoSpaceRHSensor
Space Temp Sensor	Read Only	0 = Normal 1 = Alarm	spt_fail	BV:7001	discrete in	10046	BI	46	SNVT_switch (95)	nvoSPTempSensor
SPT Sensor	Read Only	0 = Normal 1 = Alarm	spt_sensor_fail	BV:7032	discrete in	10038	BI	38		
Supply Air Temperature	Read Only	0 = Normal 1 = Alarm	sat_alarm	BV:7004	discrete in	10047	BI	47	SNVT_switch (95)	nvoSATSensor
Supply Air Temp Sensor	Read Only	0 = Normal 1 = Alarm	loc_sat_sensor_fail	BV:7020						
Supply Fan	Read Only	0 = Normal 1 = Alarm	sfan_fail_alarm	BV:7008						
Supply Fan in Hand	Read Only	0 = Normal 1 = Alarm	sfan_hand_alarm	BV:7009						
Supply Fan Relay State	Read Only	0 = Off 1 = On	sfan	BV:2001	discrete in	10023	BI	23	SNVT_switch (95)	nvoSFRelay
Supply Fan Runtime	Read Only	0 = Normal 1 = Alarm	sfan_rntm_alarm	BV:7010	discrete in	10050	BI	50		
Supply Fan Status	Read Only	0 = Off 1 = On	sfan_status	BV:1003	discrete in	10024	BI	24	SNVT_switch (95)	nvoFanStatus
Switch Configuration	Read Only	0 = Normal 1 = Alarm	di_cfg_alarm	BV:7025						
System is shut down	Read Only	0 = No 1 = Yes	shutdown_status	BV:2011						
Unocc Free Cool	R/W	0 = Disable 1 = Enable	ntfc_ena	BV:80001						
Air Source Mode	Read Only	1 = Off 2 = Warmup 3 = Heating 4 = Cooling 5 = Freecool 6 = Pressure 7 = Evac 8 = Vent	link_ahu_mode	MSV:2005						
BAS On / Off	R/W	1 = Inactive 2 = Occupied 3 = Unoccupied	keypad_ovrde	MSV:1001	unsigned int	40133	ADI	1	SNVT_count_inc (9)	nviBASOnOff
Equipment Status	Read Only	1 = Disabled 2 = Test 3 = Run	mode_status	MSV:2001						
Fan / Speed	Read Only	1 = Off 2 = Low 3 = Med 4 = High 5 = On	fan_run	MSV:2004	unsigned int	40175	ADI	4		
Fan Mode	R/W	1 = Auto 2 = Continuous 3 = Always On	fan_mode	MSV:9032						

APPENDIX B - THIRD PARTY POINTS LIST (CON'T)

RTU Open Protocol Maps

Point Name	Point Access	Units	BACnet Info		Modbus Info		N2 Info		LonWorks Info	
			BACnet Point Name	BACnet Object ID	Modbus Register Type	Modbus Register #	N2 Network Point Type	N2 Network Point Address	SNVT Type	SNVT Name
Number Of Heat Stages	R/W	1 = 1 2 = 2 3 = 0	heat_stages	MSV:9100 4						
Occupancy Source	R/W	1 = Always Occupied 2 = BACnet Schedule 3 = BAS On/Off 4 = Remote Occ Input	occ_source	MSV:1002						
Optimal Start Type	R/W	1 = None 2 = Temp Compensated 3 = Learning Adaptive	start_type	MSV:2009	unsigned int	40154	ADI	20	SNVT_count_inc (9)	nviOptimalStType
Space sensor type	R/W	1 = T55 2 = T56 3 = SPT Sensor 4 = None	spt_type	MSV:9001						
Space Temp Source	Read Only	1 = Sensor Failure 2 = SPT Sensor 3 = T55 / T56 4 = Network 5 = Airside Linkage 6 = Locked Value	spt_status	MSV:2003						
System Mode	Read Only	1 = Off 2 = Fan Only 3 = Economizer Cooling 4 = Cooling 5 = Heating 6 = Dehumidification 7 = Test 8 = Shutdown 9 = Unocc Free Cooling 10= Fire Shutdown 11= IAQ Override 12= Pre-occ Purge 13= IGC Override	run_status	MSV:2002	unsigned int	30001	ADI	13	SNVT_count_inc (9)	nvoOperatingMode

Copyright 2014 Carrier Corp. ● 7310 W. Morris St. ● Indianapolis, IN 46231
Edition Date: 04/14

Catalog No: 48–50LC–7–26–2T

Manufacturer reserves the right to change, at any time, specifications and designs without notice and without obligations.

Replaces: 48–50LC–7–26–1T

RTU OPEN START-UP SHEET

RTU Model Number: _____ Date: _____

RTU Serial Number: _____ Performed by: _____

RTU Open Software Version: _____ Company: _____

Protocol and Baud Rate: _____ Network Address: _____

CONFIGURATION POINTS

BACview Menu	POINT NAME	BACnet Object	RANGE	DEFAULT	ENTRY
		SETPOINT			
HOME>CONFIG> SETPOINT	Occupied Heating Setpoint	occupied_heat_setpoint	40–90 °F	70	
	Occupied Cooling Setpoint	occupied_cool_setpoint	55–99 °F	76	
	Unoccupied Heating Setpoint	unoccupied_heat_set-point	40–90 °F	55	
	Unoccupied Cooling Setpoint	unoccupied_cool_set-point	45–99 °F	90	
	Effective Heat Setpoint	effective_heat_setpoint	0–120 °F		
	Effective Cool Setpoint	effective_cool_setpoint	0–120 °F		
	Optimal Start (hrs)	optm_start	0–4 hr	1	
	Optimal Start Type	start_type	1=None 2=Learning Adaptive 3=Temp Compensated	Temperature Compensated	
	Heat Start K factor (min/deg)	h_kfactor	0–99	15	
	Cool Start K factor (min/deg)	c_kfactor	0–99	15	
	DCV Max Ctrl Setpoint	iaq_stpt_max	0–9999 ppm	650	
	Power Exhaust Setpoint	pexh_stpt	20–90 %Open	50	
	Occ Relative Humidity Setpoint	occ_dehum_stpt	0–unocc setpoint %rh	60	
	Unocc Relative Humidity Setpoint	unocc_dehum_stpt	30–100 %rh	95	
HOME>CONFIG> Sched	Schedule				
	Weekly schedule		MON–SUN	none	
	Exceptions			none	
		ALARM CONFIGURATION			
HOME>CONFIG> ALARMS	SPACE TEMPERATURE ALARM				
	Occupied Alarm Hysteresis	occ_spt_alrm_hyst	0–20° F	5	
	Alarm Delay (min/deg)	spt_alrm_delay	0–60 minutes	10	
	Unoccupied Low SPT Alarm Limit	uno_spt_alrm_lo_lmt	35–90 °F	45	
	Unoccupied High SPT Alarm Limit	uno_spt_alrm_hi_lmt	45–100 °F	95	
	SUPPLY AIR TEMPERATURE ALARM				
	Low SAT Alarm Limit	sat_lo_alrm_lim	15–90 °F	38	
	High SAT Alarm Limit	sat_hi_alrm_lim	90–175 °F	160	
	SPACE HUMIDITY ALARM				
	Occupied High RH Alarm Limit (%RH)	sprh_hi_alrm_lim	0–100%rh	70%rh	
	Alarm Delay (min/%RH)	sprh_delay	0–30 min	5 min	
	Unoccupied High RH Alarm Limit (%RH)	unocc_sprh_lmt	0–100%rh	100%rh	
	Low RH Alarm Limit (%RH)	sprh_lo_alrm_lim	0–100%rh	30%rh	
	IAQ / VENTILATION ALARM				
	Occupied High CO2 Alarm Limit (ppm)	iaq_occ_hi_lmt	0–9999 ppm	1200	

CONFIGURATION POINTS (CON'T)

BACview Menu	POINT NAME	BACnet Object	RANGE	DEFAULT	ENTRY
UNIT CONFIGURATION					
HOME>CONFIG> UNIT	UNIT CONFIGURATION				
	Fan Mode	fan_mode	1=Auto 2=Continuous 3=Always On	Continuous	
	Power Fail Restart Delay	start_delay	0–30 sec	5	
	Fan Off Delay	fan_delay_off	5–60 sec	30	
	Minimum Cooling SAT	sat_cl_min	45–75 °F	50	
	Maximum Heating SAT	sat_ht_max	85–150° F	120	
	Vent Dmpr Pos / DCV Min Pos	econ_min	0–100 %Open	20	
	Economizer Purge Min Pos	econ_purge_min	0–100 %Open	40	
	Low Fan Econ Min Pos	econ_min_2	0–100 %Open	33	
	DCV Max Vent Damper Pos	iaq_dpr_max	0–75 %Open	50	
	Supply Fan Service Alarm Timer	sfan_service_hrs	0–9999 hr	600	
	Comp 1 Service Alarm Timer	comp1_service_hrs	0–9999 hr	0	
	Comp 2 Service Alarm Timer	comp2_service_hrs	0–9999 hr	0	
	Filter Service Alarm Timer	filter_service_hrs	0–9999 hr	600	
	Door Alarm Delay	door_alarm_delay	0–9999 hr	60	
	Pushbutton Override	pb_enable	Disable/Enable	Enable	
	Setpoint Adjustment	stpt_adj_enable	Disable/Enable	Enable	
	Setpoint Adjustment Range	stpt_adj_range	+/– 0–5 °F	5	
	Cooling Lockout Temperature	oat_cl_lockout	0–80° F	45	
	Economizer High OAT Lockout Temp	oat_ec_lockout	55–80° F	75	
	Heating Lockout Temperature	oat_ht_lockout	35–150° F	65	
	Pre Occupancy Purge	preocc_purge	Disable/Enable	Disable	
	Purge Time	purge_time	0–240 min	60 min	
	Unocc Free Cool	ntfc_ena	Disable/Enable	Disable	
	Min Setpoint Separation	min_stpt_sep	2–10 °F	5	
	Occupancy Source	occ_source	1=Always occupied 2=BACnet Schedule 3=BAS On/Off 4=Remote Occ Input	Always Occupied	

CONFIGURATION POINTS (CON'T)

BACview Menu	POINT NAME	BACnet Object	RANGE	DEFAULT	ENTRY
HOME>CONFIG> UNIT>INPUT	INPUT CONFIGURATION				
	Input 1 Function	ai1_function	1=No Sensor 2=IAO Sensor 3=OAQ Sensor 4=Space RH Sensor	No Sensor	
	Input 2 Function	ai2_function	1=No Sensor 2=IAO Sensor 3=OAQ Sensor 4=Space RH Sensor	1 (No FIOP) 2 (FIOP)	
	Input 3 Function	di3_function	1=No Function 2=Compressor Safety 3=Fan Status 4=Filter Status 5=Remote Occupancy 6=Door Contact	Compressor Safety	
	Input 3 Switch Configuration	di3_type	N/O N/C	N/O	
	Input 5 Function	di5_function	1=No Function 2=Fire Shutdown 3=Fan Status 4=Filter Status 5=Remote Occupancy 6=Door Contact	Fire Shutdown	
	Input 5 Switch Configuration	di5_type	N/O N/C	N/C	
	Input 8 Function	di8_function	1=No Function 2=Enthalpy Switch 3=Fan Status 4=Filter Status 5=Remote Occupancy 6=Door Contact	1 (No FIOP) 2 (FIOP)	
	Input 8 Switch Configuration	di8_type	N/O N/C	N/O	
	Input 9 Function	di9_function	1=No Function 2=Humidistat 3=Fan Status 4=Filter Status 5=Remote Occupancy 6=Door Contact 7=IGC Override	Humidistat NOTE: Factory configured for IGC Override (7) on units with gas heat.	
	Input 9 Switch Configuration	di9_type	N/O N/C	N/O	
	Space sensor type	spt_type	1=T55 2=T56 (use for T59) 3=SPT Sensor 4=None	T55	
	T5x Override Duration	ovr_dur	0–24 hours	1	
HOME>CONFIG> UNIT>CALIBRATE	SENSOR CALIBRATION				
	Space Temperature	lcl_space_temp			
	Space Temp Calibration	spt_offset	–9.9–10° F	0	
	Space RH	lcl_space_rh	0–100%		
	Space AQ	lcl_space_aq	0–5000ppm		
	Supply Air Temperature	lcl_sa_temp	–56–245° F		
	Supply Air Temp Calibration	sat_offset	–9.9–10° F	0	
	Outdoor Air Temperature	lc_oa_temp	–56–245° F		
	Outdoor Air Temp Calibration	oat_offset	–9.9–10° F	0	

CONFIGURATION POINTS (CON'T)

BACview Menu	POINT NAME	BACnet Object	RANGE	DEFAULT	ENTRY
			SERVICE		
HOME>CONFIG> SERVICE			SERVICE CONFIGURATION		
	Unit Type	unit_type	1=Heat/Cool 2=LC WeatherExpert 3=HP O/B Ctrl 4=HP Y1/W1 Ctrl	2=LC WeatherExpert (3 stage/2 compressor)	
	Compressor Stages	comp_stages	One Stage/ Two Stage/ Three Stage	Three Stage (sizes 07–26) factory configured	
	Face Split Coil	face_split	Yes/No	Yes	
	Economizer Exists	econ_exist	No/Yes	No (No FIOP) Yes (FIOP)	
	Fan Control	fan_type	1=Single Speed 2=Two Speed 3=Variable Speed	3=Variable Speed	
	VFD Input	vfd_in_type	0–10Vdc/2–10Vdc	2–10Vdc	
	Max VFD Output	max_vfd_spd	15–100%	100%	
	Min VFD Output	min_vfd_spd	15–100%	40%	
	Stage 1 SAT Stpt	stg_1_sat	40–90°F	57	
	Stage 2 SAT Stpt	stg_2_sat	40–90°F	57	
	Stage 3 SAT Stpt	stg_3_sat	40–90°F	56	
	Reversing Valve Type	rev_vlv_type	O output type/B output type	O output type	
	Heat Type	heat_type	Electric/Gas	Gas (48 Series Units) Electric (50 Series Units)	
	Number of Heat Stages	heat_stages	1 / 2 / 0 (no heat)	0 (50 series cooling only units) 1 (50LC, Low Heat Sizes 07–14, Med Heat Sizes 07–09 and High Heat for Size 07) 2 (50LC Low Heat Sizes 17–26, Med Heat Sizes 12–26, High Heat Sizes 08–26 and All LC Gas units Sizes 07–27)	
	Continuous Occupied Exhaust	occ_exh	No/Yes	No	
	RH Control	rh_enable	Disable/Enable	Disable Enable (units with Humidi–MiZer option)	
	DCV Control	dcv_enable	Disable/Enable	Disable	
	Indoor CO2 Sensor Value @ Min mA	iaq_ref_lo_ppm	0–9999ppm	0	
	Indoor CO2 Sensor Value @ Max mA	iaq_ref_hi_ppm	0–9999ppm	2000	
	Outdoor CO2 Sensor Value @ Min mA	oaq_ref_lo_ppm	0–9999ppm	0	
	Outdoor CO2 Sensor Value @ Max mA	oaq_ref_hi_ppm	0–9999ppm	2000	
(Field Assistant Only)	System Space Temperature	system_spt			
	System Space RH	system_rh			
	System Space AQ	system_iaq			
	System Outdoor AQ	system_oaq			
	System Cool Demand Level	cool_demand_level	0–3	0	
	System Heat Demand Level	heat_demand_level	0–3	0	
	System Outdoor Air Temperature	system_oat			
HOME>CONFIG> SERVICE>TEST			SERVICE TEST		
	Service Test	test_enable	Disable/Enable	Disable	
	Fan Test	fan_test	Disable/Enable	Disable	
	High Speed Fan Test	hi_spd_test	Disable/Enable	Disable	
	Compressor 1 Test	comp1_test	Disable/Enable	Disable	
	Compressor 2 Test	comp2_test	Disable/Enable	Disable	
	Heat 1 Test	heat1_test	Disable/Enable	Disable	
	Heat 2 Test	heat2_test	Disable/Enable	Disable	
	Reversing Valve Test	rev_vlv_test	Disable/Enable	Disable	
	Dehumidification Test	dehum_test	Disable/Enable	Disable	
	Power Exhaust Test	pexh_test	Disable/Enable	Disable	
	Economizer Test	econ_test	0–100 %Open	0	
	VFD Speed Test	vfd_spd_test	0–100%	0	

Copyright 2014 Carrier Corp. • 7310 W. Morris St. • Indianapolis, IN 46231
Edition Date: 04/14

Catalog No: 48–50LC–7–26–2T

Manufacturer reserves the right to change, at any time, specifications and designs without notice and without obligations.

Replaces: 48–50LC–7–26–1T