# 50TCQD

**Single Package Rooftop,**
**Heat Pump Units**
**With Field−Installed Electric Heat**
**Sizes 17 & 24 with Puron® (R−410A) Refrigerant**

Carrier
turn to the experts™

# Submittal Data

- PERFORMANCE DATA
- CERTIFIED DIMENSION PRINTS
- CERTIFIED ROOF CURB DIMENSION PRINTS
- SERVICE OPTION DIMENSION PRINTS

Copyright 2012 Carrier Corp. • 7310 W. Morris St. • Indianapolis, IN 46231
Printed in U.S.A. Edition Date: 02/12

**Catalog No: 50TCQ−07SB**

**Manufacturer reserves the right to change, at any time, specifications and designs without notice and without obligations.**

Replaces: 50TCQ−05SB

Job Data: _____ Location: _____
Buyer: _____ Buyer P.O.#: _____ Carrier: _____
Unit Number: _____ Model Number: _____
Unit Designation: _____
Performance Data Certified By: _____

Certified to ISO 9001

Use of the AHRI Certified TM Mark indicates a manufacturer's participation in the program For verification of certification for individual products, go to www.ahridirectory.org.

50TCQD

# DESCRIPTION

50TCQD units are one-piece, two-stage high-efficiency heat pump units, with a low profile, prewired, tested and charged at the factory. These are intended for installation on a roof curb accessory (ordered separately), or for slab mounting (for horizontal duct connections). Units are designed to accept field-installed electric heaters. Units may be ordered with various factory-installed options. Field-installed accessories are also available.

# STANDARD FEATURES

## Base Unit

- Puron (R-410A) HFC refrigerant
- EER's up to 10.8
- IEER's:
  - — up to 11.5 with single speed indoor fan motor
  - — up to 12.0 with 2-speed/VFD indoor fan motor
- COP's up to 3.3
- ASHRAE 90.1 energy compliant
- Rated in accordance with AHRI Standard 340/360
- Designed in accordance with Underwriters' Laboratories Standard 1995
- Listed by ETL
- Two-stage cooling capacity control on all models
- Non-corrosive composite sloping design; side or center drain condensate pan. Meets ASHRAE Standard 62
- Cooling operating range from 30°F up to 115°F (-1°C up to 46°C).
- Dedicated vertical and horizontal airflow models available, ordered as factory option. No special kits required
- Two-inch disposable return air filters
- Thru-the-bottom power entry capability
- Single point electric connections on field-installed electric heat units
- 24-volt control circuit protected with resettable circuit breaker and 75-VA transformer
- Belt drive, constant torque, permanently lubricated evaporator-fan motor on all size units.
- Totally enclosed condenser motors with permanently lubricated bearings
- State-of-the-art defrost control board, easily configured for defrost cycles of 30, 60, 90, or 120 minutes.
- Centralized Terminal Board for component and unit wiring connections.
- Loss of Charge, High-Pressure, and Freeze Protection switches
- Full perimeter base rail with built-in rigging adapters and fork truck slots.

## Cabinet

- Access panels with easy grip handles
- Innovative, easy starting, no strip screw features on unit access panels.
- Pre-painted exterior panels and primer-coated interior panels tested to 500 hours salt spray protection
- Fully insulated cabinet
- Tool-less filter access door

## Refrigerant System

- Acutrol™ refrigerant metering system
- Liquid line filter drier
- Scroll compressors with internal line-break overload protection
- Indoor and outdoor coils constructed of aluminum fins mechanically bonded to seamless copper tubes.

### Refrigerant System (cont.)

- Removable gauge line plugs for reading refrigerant pressure with unit panels in place
- Four-way reversing valve operation
- Suction Line Accumulator standard - prevents excessive liquid flood back of refrigerant to the compressor even during the start of the defrost cycle.

### Standard Parts Warranty

- 5-year electric heater (field-installed)
- 5-year compressor
- 1-year parts

## PERFORMANCE DATA

Unit Operating Weight _____ lb

Curb Weight _____ lb

**Cooling**

Net Total Capacity _____ Btuh
Net Sensible Capacity _____ Btuh
Compressor Power Input _____ kW
at Outdoor Air Temperature _____ °F
Indoor Entering Air db: _____ °F wb _____ °F
Airflow _____CFM External Static Pressure _____ in.wg

**Heating**

Power Input to Unit _____ kw
Integrated Capacity _____ Btuh
Indoor Operating Air Temperature _____ °F db
Outdoor Air Temperature _____°F (Winter Design)
Rating at 70% R.H. Outdoors _____ kW Heater Selected
_____ Heat/Cool Ratio
Electrical Capacity Required _____ Btuh

## ELECTRICAL DATA

Power Supply to Unit _____ Volts _____ Phase _____ Hz
Minimum Circuit Amps _____ Maximum Overcurrent Protection (Fuse Only) _____

## SUBMITTAL DATA

Job Name _____

Architect _____

Engineer _____

Contractor _____

Unit Designation _____

# OPTIONS AND ACCESSORIES

50TCQD

## FACTORY-INSTALLED OPTIONS (FIOPs)

- ☐ Staged Air Volume (SAV) system utilizes a Variable Frequency Drive (VFD) to automatically adjust the indoor fan motor for 2 speed indoor fan motor control. Conforms to ASHRAE 90.1 2010 Standard – section 6.4.3.10.b.
- ☐ Open protocol RTU Direct Digital Control (DDC) LON, MODBUS, BACNET and Johnson N2 protocols.
- ☐ PremierLink CCN control
- ☐ Dedicated vertical discharge and return air units
- ☐ Dedicated horizontal discharge and return air units
- ☐ Through the base connectors electric conduit
- ☐ Standard Economizer with dry bulb sensing and barometric relief
- ☐ Standard Economizer with enthalpy sensing and barometric relief
- ☐ Ultra Low Leak economizer with maximum leakage rate equal or less than 4.0 cfm/sq. ft. at 1.0 in. w.g. Available on models with Staged Air Volume (SAV) 2 speed indoor fan motor only.
- ☐ Two-position motorized outdoor air damper
- ☐ Non-fused disconnect switch (80 A Max)
- ☐ Powered 115-volt convenience outlet
- ☐ Non-powered 115-volt convenience outlet
- ☐ High static indoor fan motor and drive
- ☐ Return Air smoke detector
- ☐ Supply Air smoke detector
- ☐ Smoke detectors — return and supply air
- ☐ Pre-coated Al/Cu condenser coil
- ☐ E-coated Al/Cu condenser coil
- ☐ E-coated Al/Cu condenser and evaporator coil
- ☐ Cu/Cu condenser coil
- ☐ Cu/Cu condenser coil and evaporator coil
- ☐ Condenser hail guard — louvered style
- ☐ $CO_2$ sensor

## OPTIONAL WARRANTIES

- ☐ Complete Unit Parts only up to 5 years
- ☐ Complete Unit Parts and Labor up to 5 years
  Many other optional warranties are available.
  See the *Commercial Start-Up and Optional Extended Warranty Price* price pages for further information.

## FIELD INSTALLED ACCESSORIES

- ☐ EconoMi$er™X – Ultra Low Leak electromechanical, gear driven with Honeywell W7220 digital controller. Used with 2 speed Staged Air Volume (SAV) systems only.
- ☐ Display Kit for Variable Frequency Drive (VFD), Staged Air Volume System. Allows additional set up and diagnostics of the unit VFD controller. Can be unit mounted or used with any other VFD model as a reusable device.
- ☐ EconoMi$er IV with controls and barometric relief — vertical or horizontal
- ☐ EconoMi$er2 with 4-20 mA actuator, barometric relief, and no microprocessor — vertical or horizontal
- ☐ Power Exhaust — vertical or horizontal
- ☐ PremierLink CCN controller
- ☐ Electric heat
- ☐ Single point kit
- ☐ Two-position motorized outdoor air damper
- ☐ Manual outdoor air damper 25%
- ☐ Manual outdoor air damper 50%
- ☐ Roofcurb — 14 inch (356mm) tall
- ☐ Roofcurb — 24 inch (610mm) tall
- ☐ Thru-the-bottom utility connection kit
- ☐ Thru-the-curb utility connection kit
- ☐ Time Guard II compressor anti-cycle control
- ☐ Outdoor coil hail guard — louvered style
- ☐ Low ambient head pressure controller, down to -20°F (-29°C)
- ☐ Thermostats and Sensors
- ☐ Phase Monitor
- ☐ Barometric Relief hood (for horizontal economizers)

**Economizer Sensors**

- ☐ Single Dry bulb control
- ☐ Differential Dry bulb control
- ☐ Single enthalpy control
- ☐ Differential enthalpy control
- ☐ $CO_2$ - wall mounted
- ☐ $CO_2$ - duct mounted

# CERTIFIED DIMENSION 50TCQD17

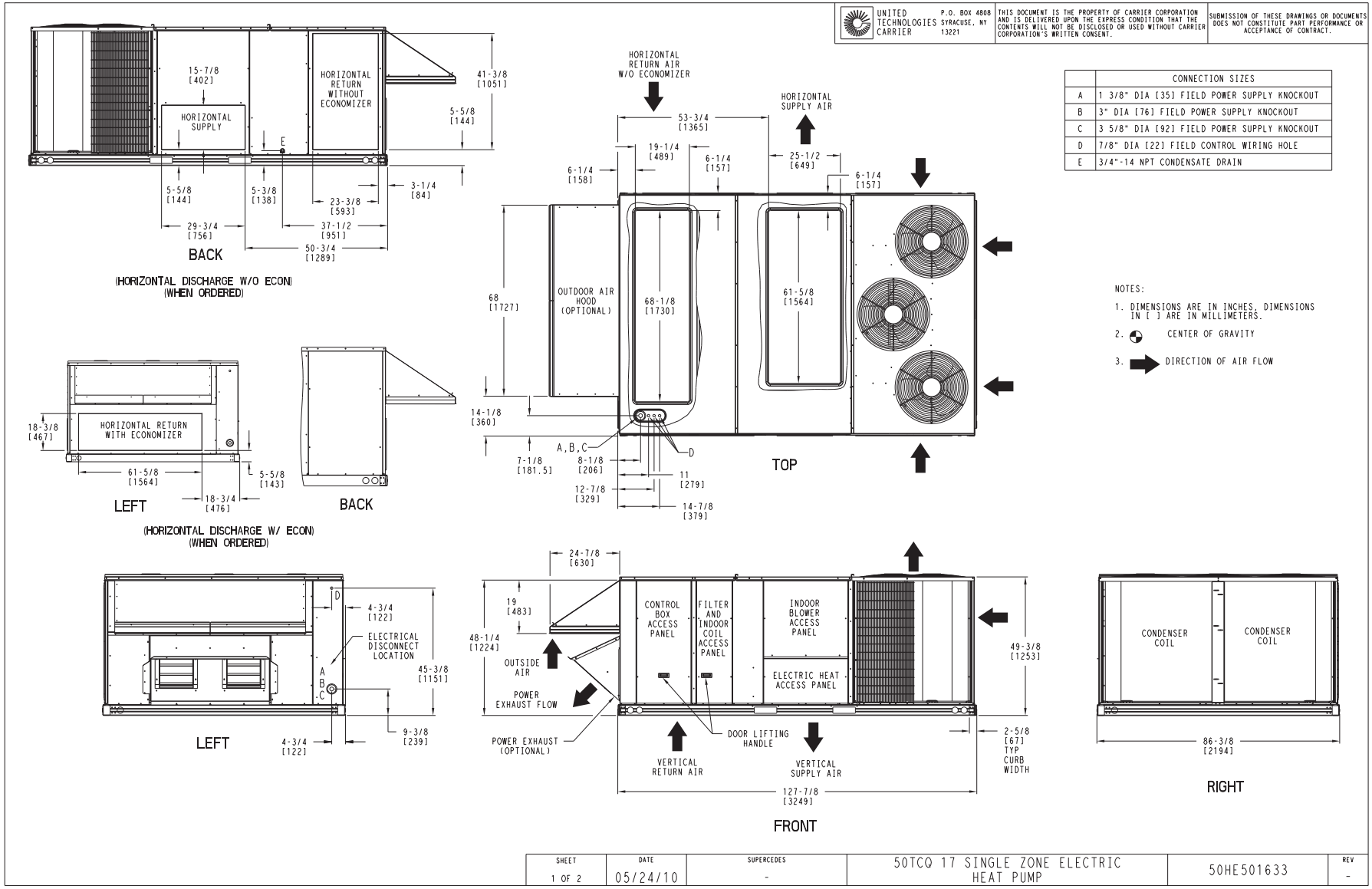


| | CONNECTION SIZES |
|---|---|
| A | 1 3/8" DIA [35] FIELD POWER SUPPLY KNOCKOUT |
| B | 3" DIA [76] FIELD POWER SUPPLY KNOCKOUT |
| C | 3 5/8" DIA [92] FIELD POWER SUPPLY KNOCKOUT |
| D | 7/8" DIA [22] FIELD CONTROL WIRING HOLE |
| E | 3/4"-14 NPT CONDENSATE DRAIN |

C10594

# CERTIFIED DIMENSION 50TCQD17

| UNIT | STD UNIT WEIGHT * | | CORNER WEIGHT (A) | | CORNER WEIGHT (B) | | CORNER WEIGHT (C) | | CORNER WEIGHT (D) | | C.G. | | |
|---|---|---|---|---|---|---|---|---|---|---|---|---|---|
| | LBS. | KG. | LBS. | KG. | LBS. | KG. | LBS. | KG. | LBS. | KG. | X | Y | Z |
| 50TCQ17 | 1775 | 807 | 479 | 218 | 364 | 166 | 403 | 183 | 530 | 241 | 45 1/4 [1149] | 55 1/4 [1403] | 16 1/2 [419] |

* STANDARD UNIT WEIGHT IS WITHOUT ELECTRIC HEAT AND WITHOUT PACKAGING.
FOR OTHER OPTIONS AND ACCESSORIES, REFER TO THE PRODUCT DATA CATALOG.

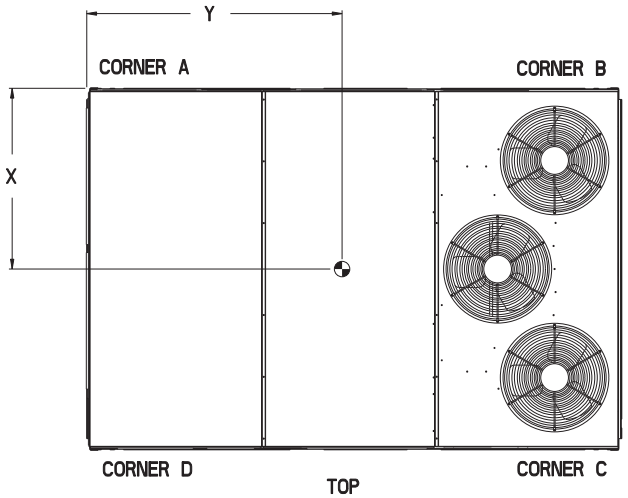


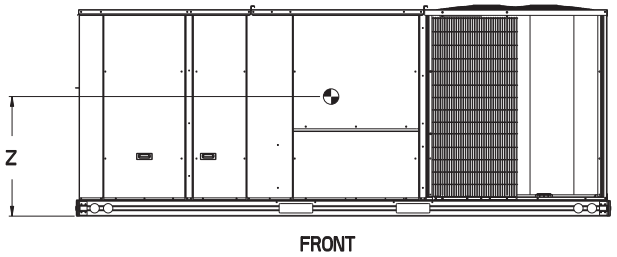


UNITED TECHNOLOGIES CARRIER
P.O. BOX 4808
SYRACUSE, NY
13221

THIS DOCUMENT IS THE PROPERTY OF CARRIER CORPORATION AND IS DELIVERED UPON THE EXPRESS CONDITION THAT THE CONTENTS WILL NOT BE DISCLOSED OR USED WITHOUT CARRIER CORPORATION'S WRITTEN CONSENT.

SUBMISSION OF THESE DRAWINGS OR DOCUMENTS DOES NOT CONSTITUTE PART PERFORMANCE OR ACCEPTANCE OF CONTRACT.

| SHEET | DATE | SUPERCEDES | | | REV |
|---|---|---|---|---|---|
| 2 OF 2 | 05/24/10 | - | 50TCQ 17 SINGLE ZONE ELECTRIC HEAT PUMP | 50HE501633 | - |

C10595

# CERTIFIED DIMENSION 50TCQD24

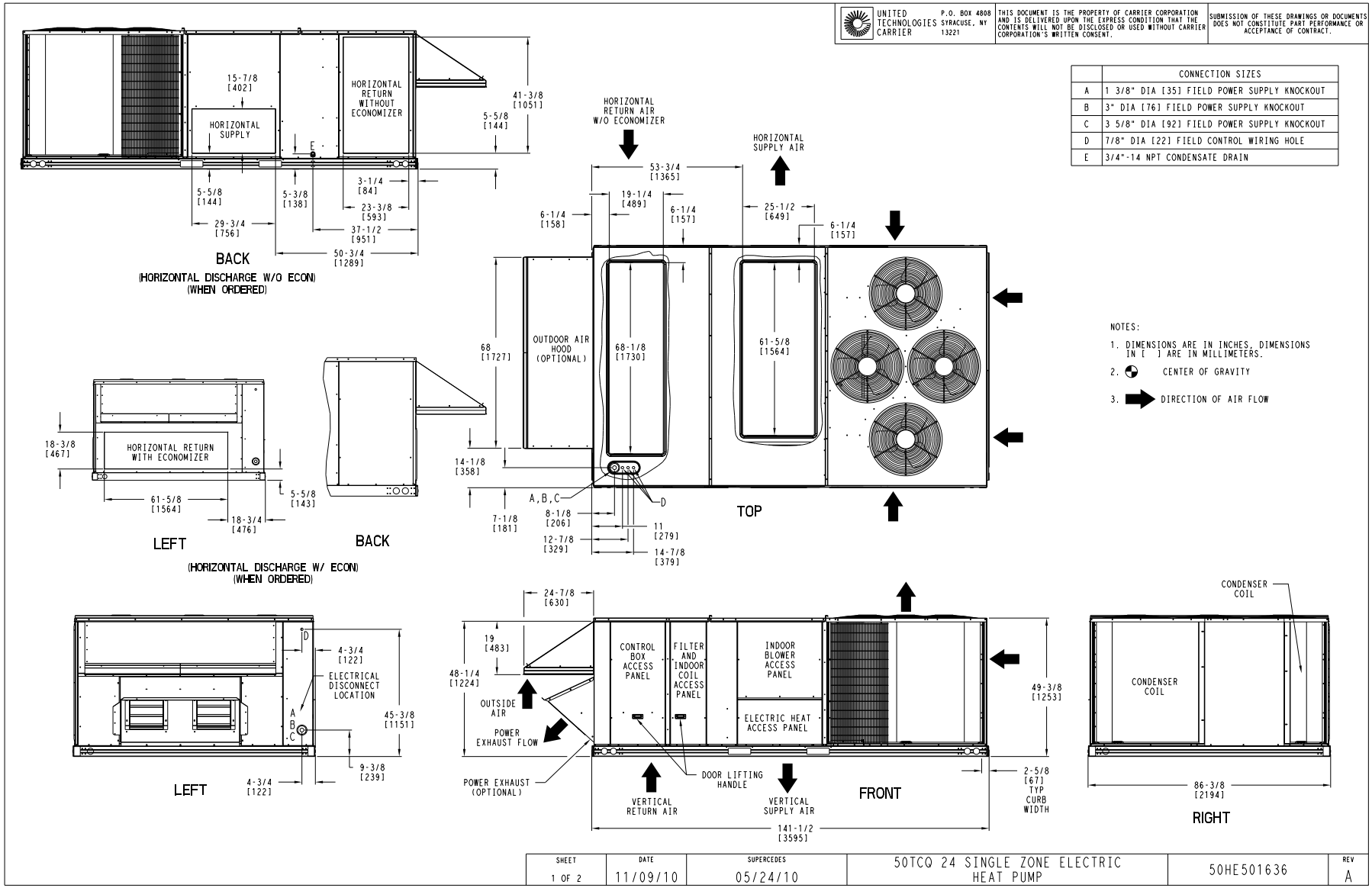


C12047

# CERTIFIED DIMENSION 50TCQD24

| UNIT | STD UNIT WEIGHT * | | CORNER WEIGHT (A) | | CORNER WEIGHT (B) | | CORNER WEIGHT (C) | | CORNER WEIGHT (D) | | C.G. | | |
|---|---|---|---|---|---|---|---|---|---|---|---|---|---|
| | LBS. | KG. | LBS. | KG. | LBS. | KG. | LBS. | KG. | LBS. | KG. | X | Y | Z |
| 50TCQ24 | 2100 | 955 | 534 | 243 | 517 | 235 | 516 | 235 | 533 | 242 | 43 [1092] | 69 1/2 [1765] | 16.5 [419] |

* STANDARD UNIT WEIGHT IS WITHOUT ELECTRIC HEAT AND WITHOUT PACKAGING.
FOR OTHER OPTIONS AND ACCESSORIES, REFER TO THE PRODUCT DATA CATALOG.

UNITED TECHNOLOGIES CARRIER
P.O. BOX 4808
SYRACUSE, NY
13221

THIS DOCUMENT IS THE PROPERTY OF CARRIER CORPORATION AND IS DELIVERED UPON THE EXPRESS CONDITION THAT THE CONTENTS WILL NOT BE DISCLOSED OR USED WITHOUT CARRIER CORPORATION'S WRITTEN CONSENT.

SUBMISSION OF THESE DRAWINGS OR DOCUMENTS DOES NOT CONSTITUTE PART PERFORMANCE OR ACCEPTANCE OF CONTRACT.

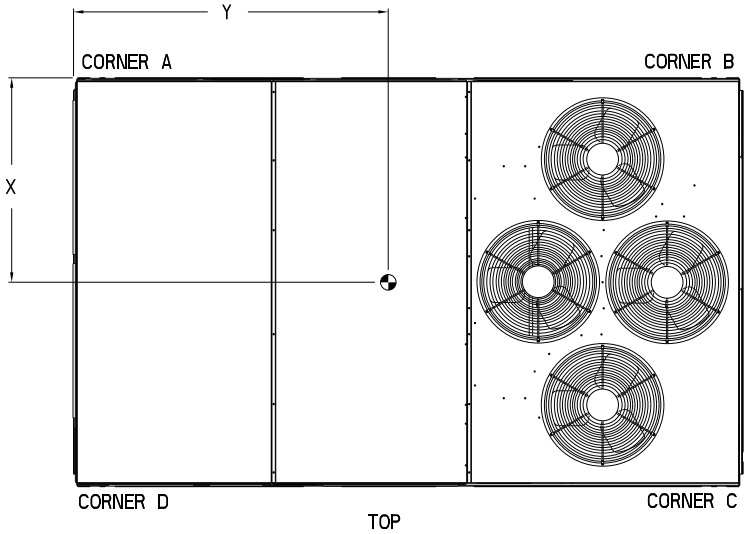


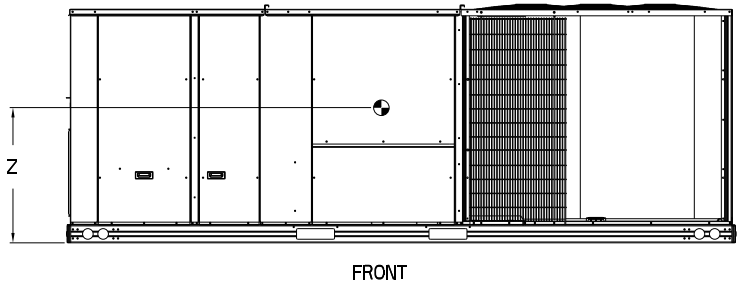


| SHEET | DATE | SUPERCEDES | | | REV |
|---|---|---|---|---|---|
| 2 OF 2 | 11/09/10 | 05/24/10 | 50TCQ 24 SINGLE ZONE ELECTRIC HEAT PUMP | 50HE501636 | A |

C12048

# ROOF CURB DETAILS - SIZE 17 UNITS

| UNIT SIZE | "A" | ROOF CURB ACCESSORY |
|---|---|---|
| 17 | 1'-2" [356.0]<br>2'-0" [610.0] | CRRFCURB045A00<br>CRRFCURB046A00 |

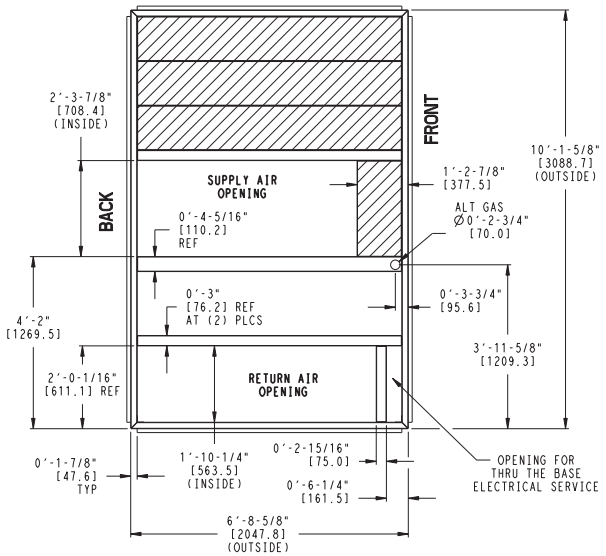


NOTES:

1 ROOF CURB ACCESSORY IS SHIPPED UNASSEMBLED.

2 DIMENSIONS IN [ ] ARE IN MILLIMETERS.

3 ROOF CURB GALVANIZED STEEL.

4 ATTACH DUCTWORK TO CURB (FLANGES ON DUCT REST ON CURB)

5 SERVICE CLEARANCE 4 ft ON EACH SIDE

DIRECTION OF AIR FLOW

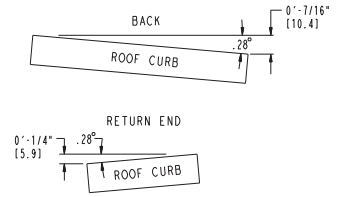


MAX CURB LEVELING TOLERANCES

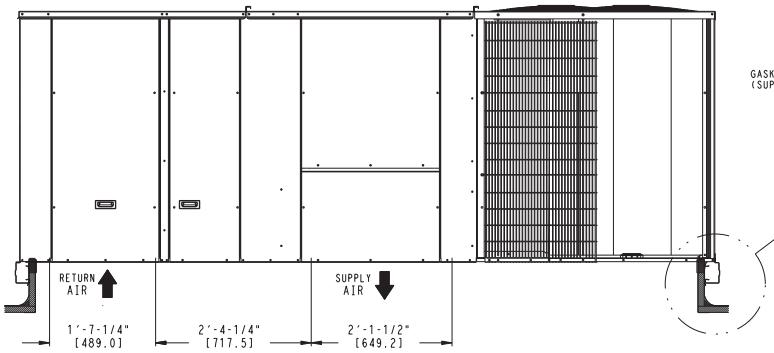


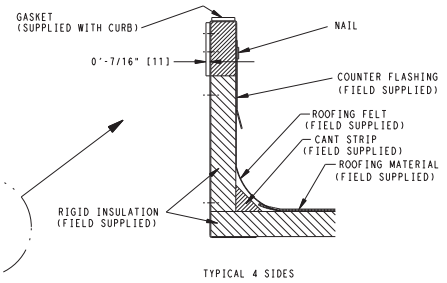


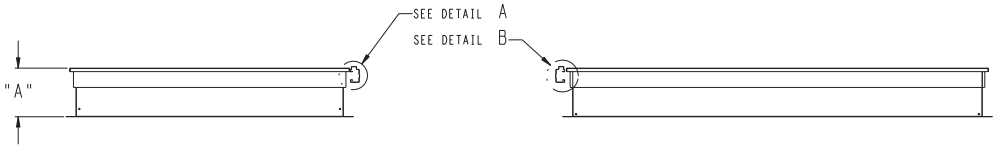


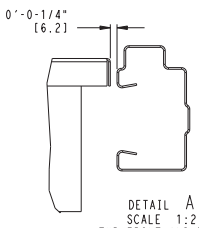


DETAIL A
SCALE 1:2
TYP FRONT AND BACK

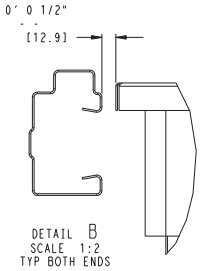


DETAIL B
SCALE 1:2
TYP BOTH ENDS

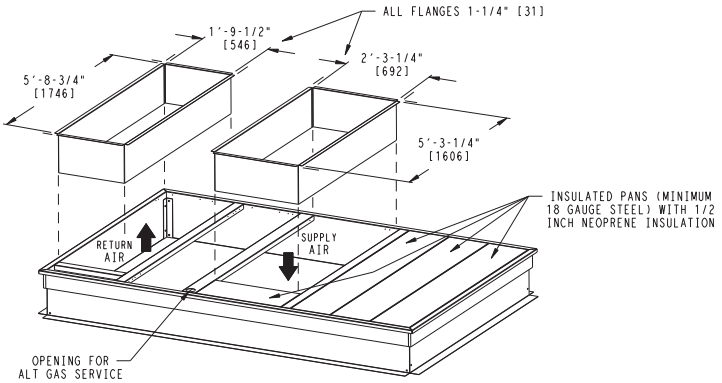


C10139

50TCQD

# ROOF CURB DETAILS - SIZE 24 UNITS

| UNIT SIZE | "A" | ROOF CURB ACCESSORY |
|---|---|---|
| 24 | 1′-2" [356.0]<br>2′-0" [610.0] | CRRFCURB047A00<br>CRRFCURB048A00 |

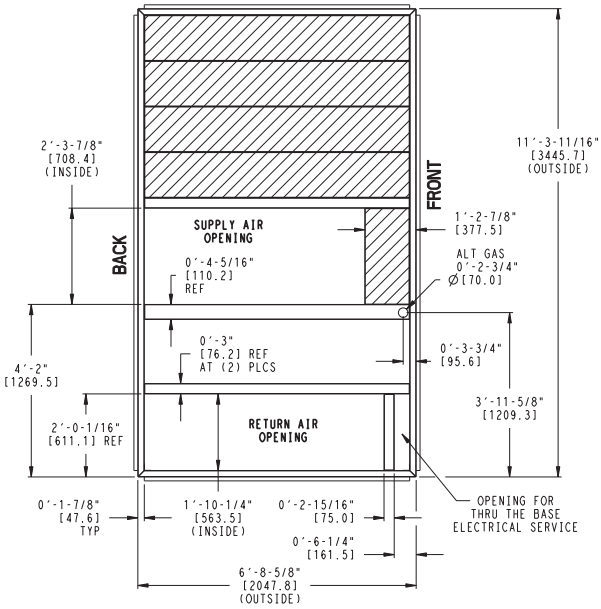


NOTES:

1 ROOF CURB ACCESSORY IS SHIPPED UNASSEMBLED.

2 DIMENSIONS IN [ ] ARE IN MILLIMETERS.

3 ROOF CURB GALVANIZED STEEL.

4 ATTACH DUCTWORK TO CURB (FLANGES ON DUCT REST ON CURB)

5 SERVICE CLEARANCE 4 ft ON EACH SIDE

➡ DIRECTION OF AIR FLOW

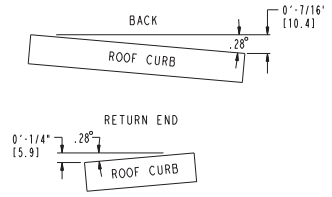


MAX CURB LEVELING TOLERANCES

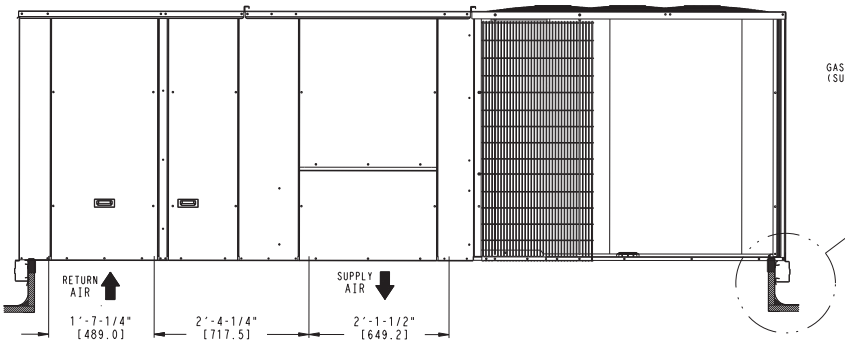


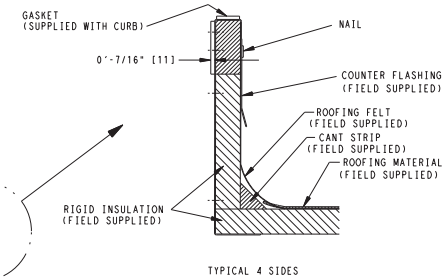


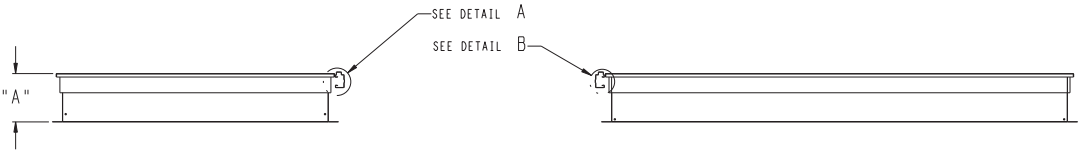


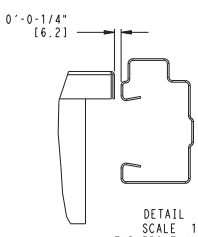


DETAIL A
SCALE 1:2
TYP FRONT AND BACK

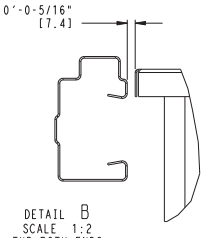


DETAIL B
SCALE 1:2
TYP BOTH ENDS

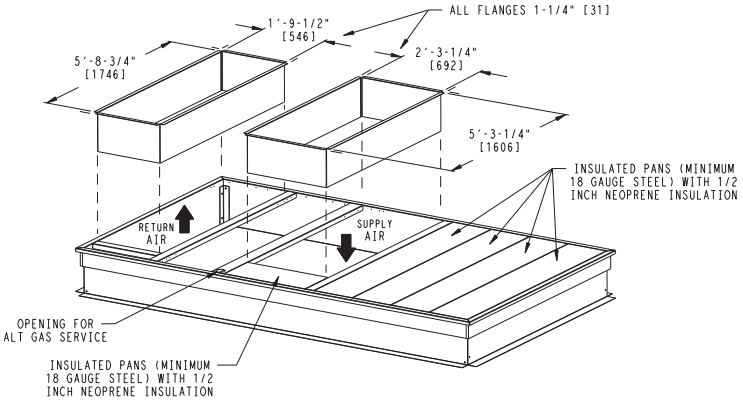


C10140