50XT
Infinity™ 15 Packaged Electric Heat Pump
with Puron® (R−410A) Refrigerant
2 to 5 Nominal Tons (024−060)

Carrier®
Turn to the Experts.℠

Product Data

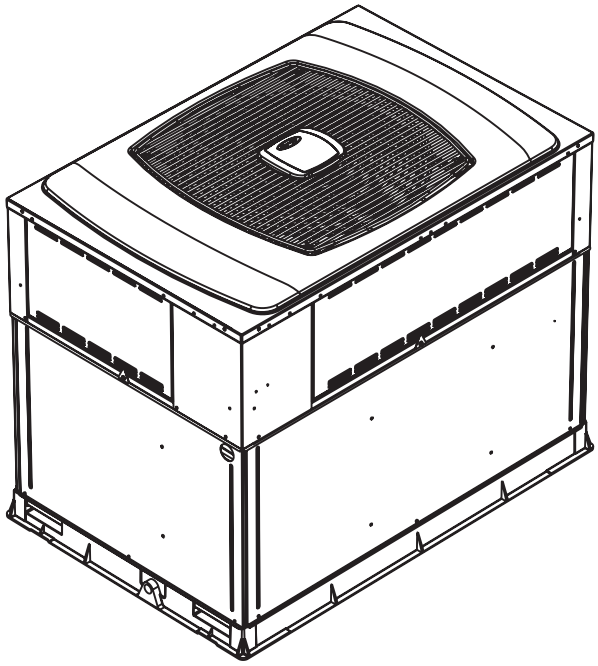

A05307

Unit 50XT

Single-Packaged Products with energy-saving features and Puron® refrigerant.

- Up to 15 SEER
- Up to 8.0 HSPF
- Up to 12 EER at 95°F (35°C) OD
- Low Sound Levels
- Variable-Speed Blower (Standard)
- Factory-Installed TXV
- Two-stage cooling and heat pump operation

FEATURES/BENEFITS

One-piece Heat Pump unit with optional electric heater, low installation cost, dependable performance and easy maintenance.

Efficient operation

High-efficiency design with SEERs (Seasonal Energy Efficiency Ratio) of up to 15.0.

Puron® environmentally-sound refrigerant is Carrier's unique refrigerant designed to help protect the environment. Puron is an HFC refrigerant which does not contain chlorine that can harm the ozone layer. The most important advantage of Puron refrigerant is that it has not been banned in future air conditioning systems as the traditional refrigerant R-22 has been. Puron refrigerant is in service in over 100,000 systems proving highly reliable, environmentally sound performance.

Comfort Heat Pump System with IdealHumidity™ featuring Infinity™ control variable-speed blower motor and two-stage cooling and heating that provides greater comfort, humidity control, and energy efficiency.

Variable-speed blower motors provide better comfort and energy efficiency. You can expect up to 30 times better dehumidification; economical constant airflow which provides improved indoor air quality and more even temperatures from room to room; and reduced indoor noise due to lower air velocity. In addition, you'll realize improved installation flexibility with 3 different airflow choices for best overall comfort.

Easy installation

Factory-assembled package is a compact, fully self-contained heat pump unit that is pre-wired, pre-piped, and pre-charged for minimum installation expense. 50XT units are available in a variety of standard capacity ranges. Units install easily on a rooftop or at ground level.

Durable, dependable components

Compressors have two stages of cooling and heating and are designed for high efficiency. Each compressor is hermetically sealed against contamination to help promote longer life and dependable operation. Vibration isolation provides quiet operation. Compressors have internal high-pressure and overcurrent protection.

Convertible duct configuration

Unit is designed for easy use in either downflow or horizontal applications. Each unit is easily converted from horizontal to downflow and includes horizontal duct covers.

Direct-drive, variable-speed blower motor is standard on all 50XT models.

Direct-drive, PSC condenser fan motors are designed to help reduce energy consumption and provide for cooling operation down to 55°F (12.7°C) outdoor temperature. Low-ambient cooling is available below 55°F (12.7°C) when low-ambient cooling is enabled in the User Interace (UI). Motormaster® II low-ambient kit is not required.

Infinity™ User Interface is designed to work as a system with Carrier's single-packaged product.

Refrigerant system is designed to provide dependability. Liquid refrigerant filter driers are used to promote clean, unrestricted operation. Each unit leaves the factory with a full Puron refrigerant charge. Refrigerant service connections make checking operating pressures easier.

Indoor and outdoor coils are computer designed for optimum heat transfer and cooling efficiency. The indoor coil is fabricated from copper tube and aluminum fins and is located inside the unit for protection against damage. The outdoor coil is internally mounted on the top tier of the unit. Copper fin coils and pre-coated fin coils are available from the factory by special order. These coils are recommended in applications where aluminum fins are likely to be damaged due to corrosion. They are ideal for seacoast applications.

Thermostatic expansion valve (TXV) —A hard-shutoff, balance port TXV maintains a constant superheat at the evaporator exit (cooling cycle) resulting in higher overall system efficiency.

High- and low-pressure switches give added safety and reliability to the compressor.

Low sound ratings ensure a quiet indoor and outdoor environment with sound ratings as low as 75 dB. (See page 3.)

Easy to service cabinets provide easy single-panel accessibility to serviceable components during maintenance and installation. The basepan, with integrated drain pan, provides easy ground level installation with or without a mounting pad. Convenient handholds are provided to manipulate the unit on the job site. A nesting feature ensures a positive basepan to roof curb seal when the unit is roof mounted. A convenient 3/4-in. wide perimeter flange makes frame mounting on a rooftop easy.

Louvered grille provides hail and vandalism protection for the coil.

Downflow operation is easily provided in the field to allow vertical ductwork connections. The basepan utilizes knockout style seals on the bottom openings to ensure a positive seal in the horizontal airflow mode.

Cabinets are constructed of heavy-duty, phosphated, zinc-coated, pre-painted steel capable of withstanding 500 hrs of salt spray. Interior surfaces of the evaporator and electric heater compartments are insulated with cleanable, semi-rigid insulation board, which keeps the conditioned air from being affected by the outdoor ambient temperature and provides improved indoor air quality. (Conforms to American Society of Heating, Refrigeration and Air Conditioning Engineers No. 62P.) The sloped drain pan minimizes standing water in the unit, which is provided with an external drain.

Standard metal duct covers with insulation come with the unit and cover the horizontal duct openings. These can be left in place if the units are converted to downflow.

Short-cycling protection for the compressor is incorporated into our Infinity heat pump/air conditioner dual capacity control board ensuring a five-minute delay before restarting compressor after shutdown for any reason.

Limited Warranty—Standard 5-year limited warranty on all parts and 10-year limited warranty on compressor.

TABLE OF CONTENTS

FEATURES/BENEFITS 1-2
MODEL NUMBER NOMENCLATURE 3
ARI CAPACITIES 3
PHYSICAL DATA 4
OPTIONS AND ACCESSORIES 5-6
BASE UNIT DIMENSIONS 7-8
ACCESSORY DIMENSIONS 9
SELECTION PROCEDURE 10
PERFORMANCE DATA 11-29
TYPICAL PIPING AND WIRING 30
APPLICATION DATA 31
ELECTRICAL DATA 32
TYPICAL WIRING SCHEMATICS 33
CONTROLS 34
GUIDE SPECIFICATIONS 35-36

MODEL NUMBER NOMENCLATURE

50XT 024 – – – 3 0 1 – –

Type of Unit
50XT - Packaged
Electric Heat Pump

Nominal Cooling Capacity
024 - 2 Ton
030 - 2.5 Ton
036 - 3 Ton
042 - 3.5 Ton
048 - 4 Ton
060 - 5 Ton

N/A

LEGEND
AL - Aluminum
CU - Copper

Electrical Supply
3- 208/230-1-60

Series

Packaging

Options

BT - AL evap, vinyl condens
CC - AL evap, CU condens
CU - CU evap & condens
TP - Base unit with tin plated indoor coil hairpins
TV - TP with vinyl coating on outdoor coil
TC - TP with AL indoor coil and CU/CU outdoor coil

Only used if ordering an option

ARI* CAPACITIES

Cooling Capacities and Efficiencies

UNIT 50XT	NOMINAL TONS	STANDARD CFM (High/Low Stage) (Cooling & Heating)	NET COOLING CAPACITIES (Btuh) (High/Low Stage)	EER @A†	SEER‡	SOUND RATINGS** (dBA)
024	2	800 / 600	22,600 / 17,600	11.2	15.0	75
030	2–1/2	1000 / 700	28,600 / 21,400	11.6	15.0	75
036	3	1200 / 850	34,600 / 24,400	12	15.0	75
042	3–1/2	1500 / 975	40,500 / 29,000	11.6	15.0	75
048	4	1600 / 1100	46,000 / 33,400	11	14.5	78
060	5	1750 / 1200	57,000 / 40,500	11	14.0	78

Heating Capacities and Efficiencies

UNIT 50XT	HIGH HEAT CAPACITY (BTUH) @ 47°F (8.3°C) (High/Low Stage)	HIGH HEAT COP @ 47°F (8.3°C) (High/Low Stage)	LOW HEAT CAPACITY (BTUH) @ 17°F (-8.3°C) (High/Low Stage)	LOW HEAT COP @ 17°F (-8.3°C) (High/Low Stage)	HSPF‡
024	20,800 / 16,800	3.3 / 3.2	11,600 / 8,400	2.2 / 1.8	8.0
030	27,600 / 20,400	3.5 / 3.5	14,000 / 9,600	2.1 / 1.9	8.0
036	33,600 / 23,000	3.4 / 3.4	17,200 / 11,200	2.4 / 1.7	8.0
042	39,500 / 27,600	3.6 / 3.5	20,600 / 14,200	2.3 / 2.0	8.0
048	45,500 / 32,200	3.3 / 3.5	25,000 / 15,200	2.4 / 1.9	8.0
060	56,000 / 39,500	3.2 / 3.3	30,800 / 20,400	2.2 / 1.9	8.0

* Air Conditioning & Refrigeration Institute.
† "A" conditions–80°F (26.6°C) indoor db/67°F (19.4°C) indoor wb & 95°F (35°C) outdoor db.
‡ Rated in accordance with U.S. Government DOE (Department of Energy) test procedures and/or ARI Standards 210/240–94.
** Tested in accordance with ARI Standard 270–95 (not listed in ARI).

NOTES:
1. Ratings are net values, reflecting the effects of circulating fan heat. Ratings are based on:
Cooling Standard: 80°F (26.6°C) db, 67°F (19.4°C) wb indoor entering –air temperature and 95°F (35°C) db outdoor entering–air temperature.
2. Before purchasing this appliance, read important energy cost and efficiency information available from your retailer.

LEGEND
dBA—Sound Levels (decibels)
db—Dry Bulb
SEER—Seasonal Energy Efficiency Ratio
wb—Wet Bulb
COP—Coefficient of Performance
HSPF—Heating Season Performance Factor

PHYSICAL DATA

UNIT SIZE	024	030	036	042	048	060
NOMINAL CAPACITY (ton)	2	2-1/2	3	3-1/2	4	5
OPERATING WEIGHT (lb.)	405	435	464	476	492	535
COMPRESSOR	Two-Stage Scroll					
REFRIGERANT: PURON (R-410A) Quantity (lb.)	10.3	11.5	9.7	14.0	15.5	16.0
EXPANSION DEVICE-HEATING	AccuRater					
ORIFICE OD (in.) - Left	0.042	0.038	0.035	0.040	0.038	0.046
ORIFICE OD (in.) - Right		0.038	0.035	0.042	0.046	0.046
EXPANSION DEVICE-COOLING	TXV					
Size	2 Ton	3 Ton	3 Ton	4 Ton	4 Ton	5 Ton
Part Number	EA36YD129	EA36YD139	EA36YD139	EA36YD149	EA36YD149	EA36YD159
OUTDOOR COIL						
Rows…Fins/in.	2…21	2…21	2…21	2…21	2…21	2…21
Face Area (sq. ft.)	13.6	15.3	17.5	19.4	19.4	23.3
OUTDOOR FAN						
Nominal Cfm	2700	2700	2800	2800	3300	3300
Diameter	22	22	22	22	22	22
Motor HP (RPM)	1/8 (825)	1/8 (825)	1/8 (825)	1/8 (825)	1/4 (1100)	1/3 (1110)
INDOOR COIL						
Rows…Fins/in.	3…17	3…17	3…17	3…17	3…17	4…17
Face Area (sq. ft.)	3.7	3.7	4.7	4.7	5.7	5.7
INDOOR FAN						
Nominal Airflow (Cfm)						
Comfort	Variable based on Comfort Settings (see User Interface instructions for more information).					
Efficiency	700	875	1050	1225	1400	1750
Max	800	1000	1200	1400	1600	2000
Size (in.)	10x10	10x10	11x10	11x10	11x10	11x10
Motor HP (RPM)	1/2	1/2	3/4	3/4	3/4	1
HIGH-PRESSURE SWITCH (psig)						
Cutout	670 ± 10					
Reset (Auto)	470 ± 25					
HIGH-PRESSURE SWITCH 2 (psig) (Compressor Solenoid)						
Cutout	565 ± 15					
Reset (Auto)	455 ± 15					
LOSS-OF-CHARGE/LOW-PRESSURE SWITCH (Liquid Line) (psig)						
Cutout	23 ± 5					
Reset (Auto)	55 ± 5					
RETURN-AIR FILTERS (in.)* Throwaway	20x24x1	20x24x1	24x30x1	24x36x1	24x36x1	24x36x1

*Recommended filter sizes for field-installed air filter grilles mounted on the wall or ceiling of the conditioned structure. Required filter sizes shown are based on the larger of the ARI (Air Conditioning and Refrigeration Institute) rated cooling airflow or the heating airflow velocity of 300 ft/minute for throwaway type or 450 ft/minute for high-capacity type. Air filter pressure drop for non-standard filters must not exceed 0.08 in. wg.

ISO 9001:2000

Outdoor Sound: Octave Band Data—Decibels (dBA)

MODEL NO.	50XT					
Frequency (Hz)	024	030	036	042	048	060
125	58.8	58.8	60.7	56.7	62.4	63.5
250	63.5	63.5	63.3	62.8	69.9	67.6
500	67.2	67.2	66.8	67.8	71.3	71.8
1000	66.9	66.9	66.5	67.4	73.4	75.5
2000	63.7	63.7	64.2	63.7	70.0	71.0
4000	58.3	58.3	60.3	57.7	66.3	68.1
8000	50.0	50.0	53.0	50.8	60.1	59.9

OPTIONS AND ACCESSORIES

Factory-installed options

Coil options include tin-plated* indoor hairpins, copper/copper and vinyl-coated construction for refrigerant coils. Units are shipped standard with copper tube/aluminum fin construction. See model number nomenclature for coil options.

*Tin-plated indoor coils are built with special hairpins that are designed to resist both general pitting corrosion and excessive indoor corrosion (Formicary Corrosion).

Field-installed accessories

Manual Air Damper (25% open)
Electric Heaters
Filter Rack
Flat Roof Curbs (8-in. and 14-in.)
Square-to-Round Duct Transition Kit
Infinity™ User Interface
Crankcase Heater
Lifting Kit
Compressor Hard Start Kit

Manual outside air damper includes hood and filter rack with adjustable damper blade for up to 25% outdoor air.

Electric heaters provide additional heat in the unit when required. Each package has a heater module that slides into the controls compartment. Heater sizes range from 5.0 to 20.0 kW. The electric heater design allows the use of a single-point power supply for the entire unit, resulting in lower installed costs.

Flat roof curbs in both 8 in. and 14 in. sizes are available for roof mounted applications.

Square-to-round duct transition kit enables 024-048 size units to be fitted to 14 in. round ductwork.

Infinity User Interface coupled with the system's variable-speed indoor blower delivers Carrier's patented IdealHumidity technology that allows for even greater humidity control. Along with more precisely controlling temperature and humidity, the Infinity User Interface offers full seven-day programmability allowing you to further customize your comfort and energy savings.

Lifting kit includes 4 metal brackets that are available to assist in lifting this product onto a roof application.

Crankcase heater provides anti-floodback protection for low-load cooling applications.

Filter rack features easy installation, serviceability, and high-filtering performance for vertical or horizontal applications.

Compressor hard start kit assists compressor start-up by providing additional starting torque on single phase units and prolongs compressor motor life.

Electric Heaters

ODS CATALOG	NOMINAL CAPACITY	USED WITH SIZES							
ORDERING NO.	(kW)	FUSED	STAGES	24	30	36	42	48	60
208/240 —SINGLE PHASE (60 Hz)									
CPHEATER080A00	3.8 / 5.0	NO	1	X	X	X			
CPHEATER081A00	3.8 / 5.0	YES	1				X	X	X
CPHEATER083A00	5.4 / 7.2	YES	1	X	X	X	X	X	X
CPHEATER085A00	7.5 / 10.0	YES	1	X	X	X	X	X	X
CPHEATER087A00	11.3 / 15.0	YES	2		X	X	X	X	X
CPHEATER089A00	15.0 / 20.0	YES	2				X	X	X

NOTE
Electric heaters are rated at 240v. Refer to Multiplication Factors table for other voltages.

LEGEND
ODS—Order Distribution System

FILTER RACK

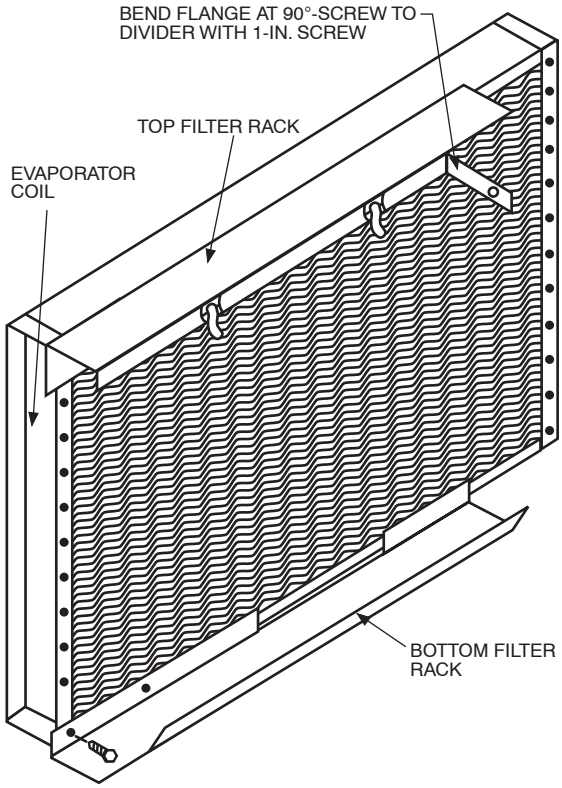

MANUAL OUTSIDE AIR DAMPER

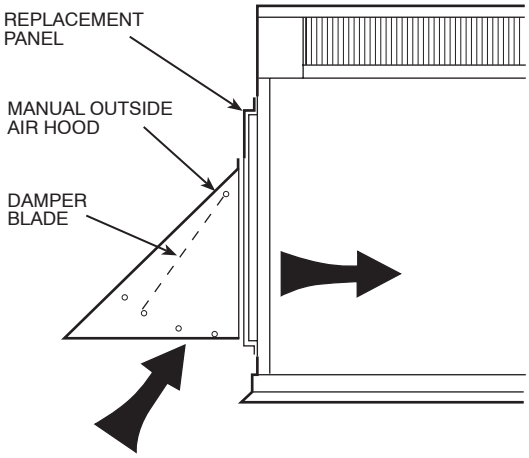

UNIT	ELECTRICAL CHARACTERISTICS	UNIT WT.		UNIT HEIGHT	CENTER OF GRAVITY MM/IN		
		LBS.	KG.	"A"	X	Y	Z
50XT024	208/230-1-60	405	183.7	1041.9(41.02)	508(20.0)	489.0(19.3)	447.0(17.6)
50XT030	208/230-1-60	435	197.3	1092.7(43.02)	508(20.0)	355.6(14.0)	330.2(13.0)

CORNER WEIGHT LBS./KG.				
	A	B	C	D
024	81/36.7	63/28.6	97/44.0	164/74.4
030	87/39.5	67/30.4	105/47.6	176/79.8

REQUIRED CLEARANCES TO COMBUSTIBLE MATL.

	MILLIMETERS [IN]
TOP OF UNIT	355.6 [14.00]
DUCT SIDE OF UNIT	50.8 [2.00]
SIDE OPPOSITE DUCTS	355.6 [14.00]
BOTTOM OF UNIT	12.7 [0.50]
ELECTRIC HEAT PANEL	914.4 [36.00]

NEC. REQUIRED CLEARANCES.

	MILLIMETERS [IN]
BETWEEN UNITS, POWER ENTRY SIDE	1066.8 [42.00]
UNIT AND UNGROUNDED SURFACES, POWER ENTRY SIDE	914.0 [36.00]
UNIT AND BLOCK OR CONCRETE WALLS AND OTHER GROUNDED SURFACES, POWER ENTRY SIDE	1066.8 [42.00]

REQUIRED CLEARANCE FOR OPERATION AND SERVICING

	MILLIMETERS [IN]
EVAP. COIL ACCESS SIDE	914.0 [36.00]
POWER ENTRY SIDE	914.0 [36.00]
(EXCEPT FOR NEC REQUIREMENTS)	
UNIT TOP	914.0 [36.00]
SIDE OPPOSITE DUCTS	914.0 [36.00]
DUCT PANEL	304.8 [12.00]*

*MINIMUM DISTANCES: IF UNIT IS PLACED LESS THAN 304.8 [12.00] FROM WALL SYSTEM, THEN SYSTEM PERFORMANCE MAYBE COMPROMISED.

DIMENSIONS IN [] ARE IN INCHES

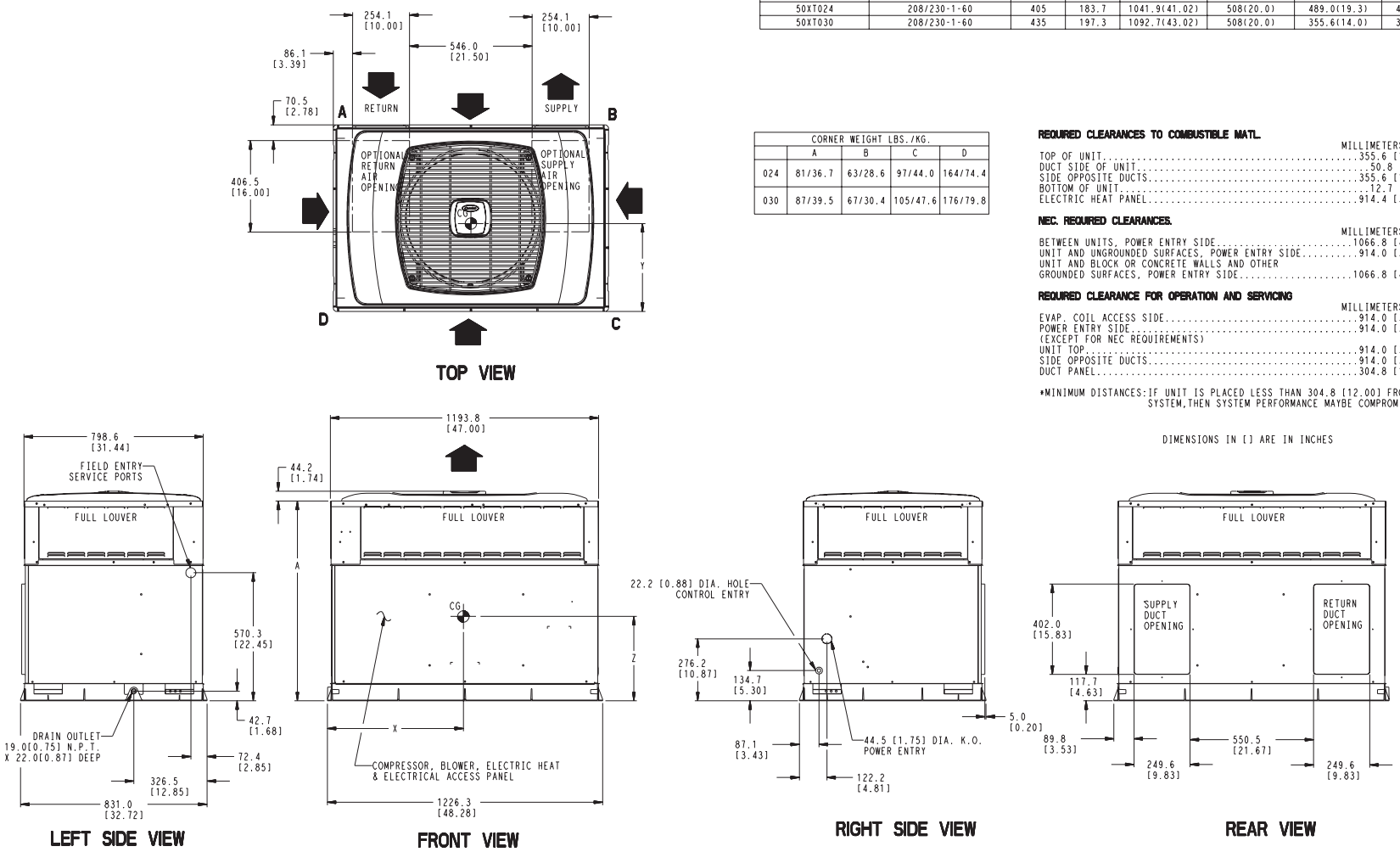

A06594

50XT024-030 Unit Dimensions

UNIT	ELECTRICAL CHARACTERISTICS	UNIT WT.		UNIT HEIGHT	CENTER OF GRAVITY		
		LBS.	KG.	"A"	X	Y	Z
50XT036	208/230-1-60	464	210.5	1142.5(44.98)	553.4(21.0)	520.7(20.5)	421.6(16.6)
50XT042	208/230-1-60	476	215.9	1193.3(46.98)	553.4(21.0)	520.7(20.5)	421.6(16.6)
50XT048	208/230-1-60	492	223.2	1193.3(46.98)	495.3(19.5)	593.8(21.3)	457.2(18.0)
50XT060	208/230-1-60	535	242.7	1294.9(50.98)	553.4(21.0)	508.0(20.0)	447.0(17.6)

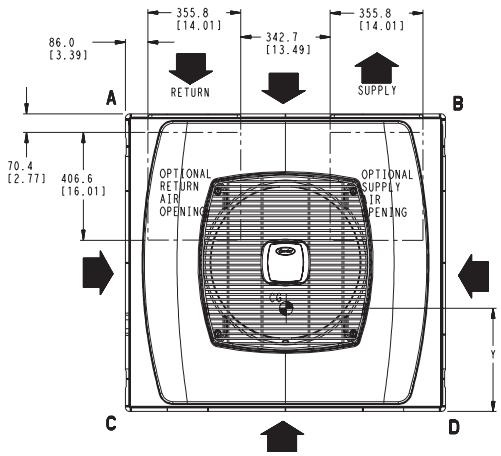

TOP VIEW

CORNER WEIGHT LBS./KG.				
	A	B	C	D
036	93/42.2	72/32.7	112/50.8	187/84.8
042	95/43.1	74/33.6	115/52.2	192/87.1
048	104/47.2	65/29.5	135/61.2	188/85.3
060	115/52.2	75/34.0	146/66.2	199/90.3

REQUIRED CLEARANCES TO COMBUSTIBLE MATL.

MILLIMETERS [IN]
TOP OF UNIT.....355.6 [14.00]
DUCT SIDE OF UNIT.....50.8 [2.00]
SIDE OPPOSITE DUCTS.....355.6 [14.00]
BOTTOM OF UNIT.....12.7 [0.50]
ELECTRIC HEAT PANEL.....914.4 [36.00]

NEC. REQUIRED CLEARANCES.

MILLIMETERS [IN]
BETWEEN UNITS, POWER ENTRY SIDE.....1066.8 [42.00]
UNIT AND UNGROUNDED SURFACES, POWER ENTRY SIDE.....914.0 [36.00]
UNIT AND BLOCK OR CONCRETE WALLS AND OTHER
GROUNDED SURFACES, POWER ENTRY SIDE.....1066.8 [42.00]

REQUIRED CLEARANCE FOR OPERATION AND SERVICING

MILLIMETERS [IN]
EVAP. COIL ACCESS SIDE.....914.0 [36.00]
POWER ENTRY SIDE.....914.0 [36.00]
(EXCEPT FOR NEC REQUIREMENTS)
UNIT TOP.....914.0 [36.00]
SIDE OPPOSITE DUCTS.....914.0 [36.00]
DUCT PANEL.....304.8 [12.00]*

*MINIMUM DISTANCES:IF UNIT IS PLACED LESS THAN 304.8 [12.00] FROM WALL SYSTEM,THEN SYSTEM PERFORMANCE MAYBE COMPROMISED.

DIMENSIONS IN [] ARE IN INCHES

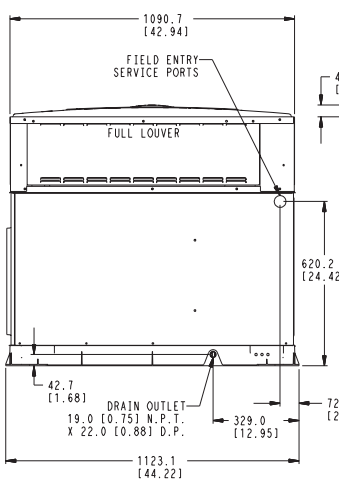

LEFT SIDE VIEW

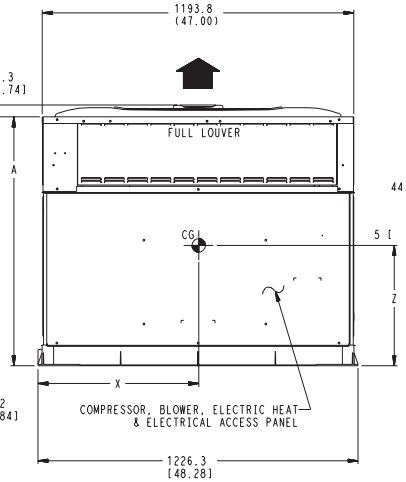

FRONT VIEW

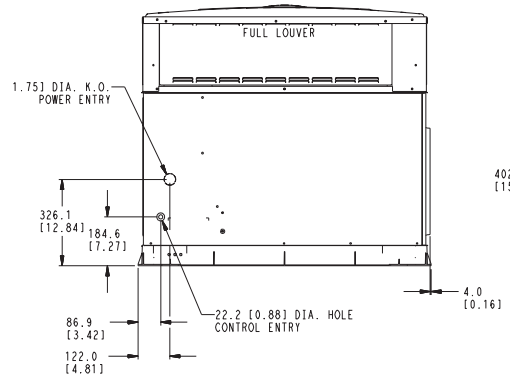

RIGHT SIDE VIEW

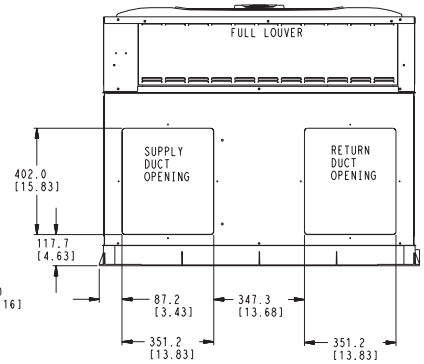

REAR VIEW

A06595

50XT036-060 Unit Dimensions

ACCESSORY DIMENSIONS

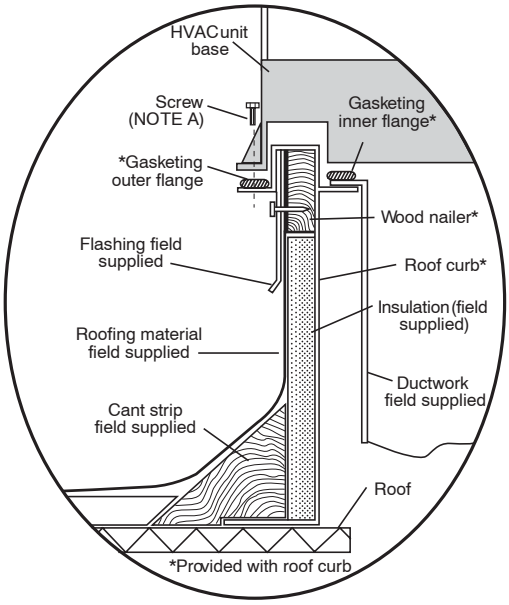

Roof Curb for Small Cabinet

Note A: When unit mounting screw is used, retainer bracket must also be used.

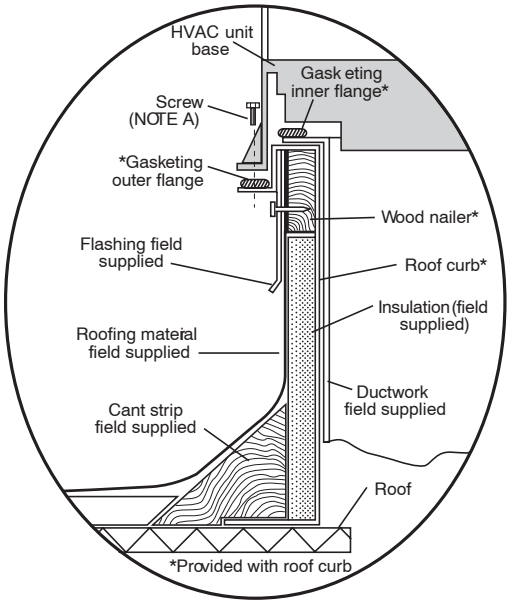

Roof Curb for Large Cabinet

Note A: When unit mounting screw is used, retainer bracket must also be used.

50XT

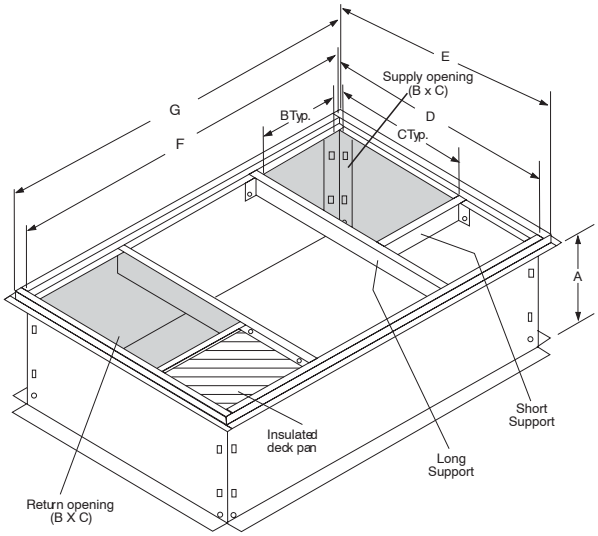

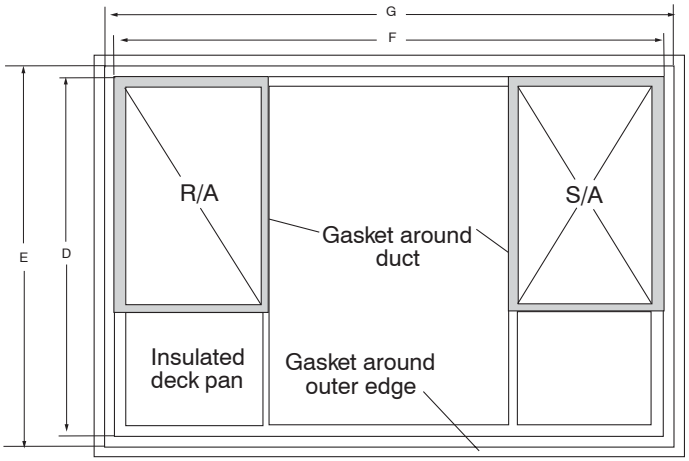

A05308

UNIT SIZE	ODS CATALOG NUMBER	A IN. (MM)	B IN. (MM)	C IN. (MM)	D IN. (MM)	E IN. (MM)	F IN. (MM)	G IN. (MM)
024-030	CPRFCURB006A00	8 (203)	11 (279)	16-1/2 (419)	28-3/4 (730)	30-3/8 (771)	44-5/16 (1126)	45-15/16 (1167)
	CPRFCURB007A00	14 (356)	11 (279)	16-1/2 (419)	28-3/4 (730)	30-3/8 (771)	44-5/16 (1126)	45-15/16 (1167)
036-060	CPRFCURB008A00	8 (203)	16-3/16 (411)	17-3/8 (441)	40-1/4 (1022)	41-15/16 (1065)	44-7/16 (1129)	46-1/16 (1169)
	CPRFCURB009A00	14 (356)	16-3/16 (411)	17-3/8 (441)	40-1/4 (1022)	41-15/16 (1065)	44-7/16 (1129)	46-1/16 (1169)

NOTES:

1. Roof curb must be set up for unit being installed.
2. Seal strip must be applied, as required, to unit being installed.
3. Dimensions are in inches.
4. Dimension in ( ) are in millimeters.
5. Roof curb is made of 16-gauge steel.
6. Attach ductwork to curb (flanges of duct rest on curb).
7. Insulated panels: 1-in. thick fiberglass 1 lb. density.
8. When unit mounting screw is used (see Note A), a retainer bracket must be used as well. This bracket must also be used when required by code for hurricane or seismic conditions. This bracket is available through Micrometl.

50XT CORNER WEIGHTS (IN POUNDS)

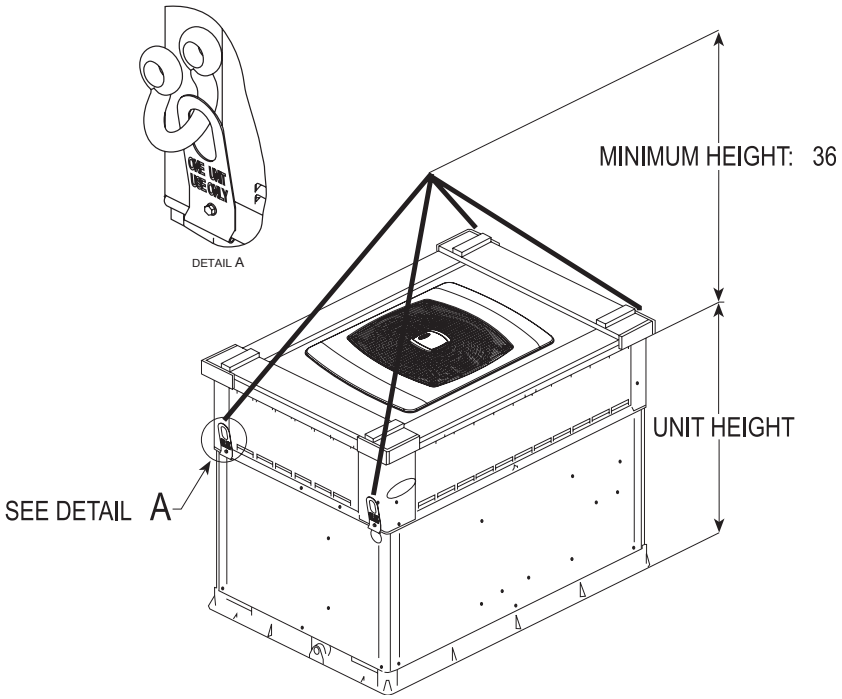

A06298

CABINET	MODEL	RIGGING WT (LB)	A	B	C	D
Small	50XT-024	382	75	57	91	158
	50XT-030	387	76	58	93	160
Large	50XT-036	469	93	71	113	192
	50XT-042	491	97	74	118	201
	50XT-048	497	104	63	136	193
	50XT-060	548	117	75	149	207

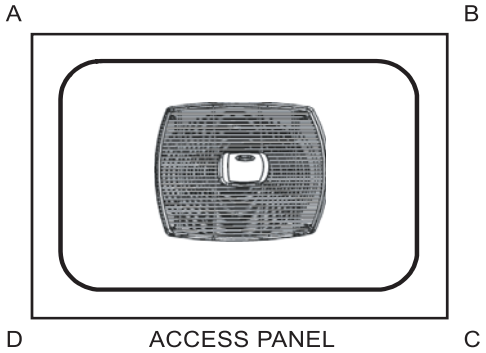

A06296

SELECTION PROCEDURE

Determine cooling and heating requirements at design conditions

Given:

REQUIRED COOLING CAPACITY (TC) . . . . . 34,500 BTUH
SENSIBLE HEAT CAPACITY (SHC) . . . . . 24,000 BTUH
REQUIRED HEATING CAPACITY (SHC) . . . . 36,000 BTUH
CONDENSER ENTERING AIR TEMPERATURE 95°F (35°C)
INDOOR-AIR TEMPERATURE . . 80°F (26.6°C) EDB, 67°F (19.4°C) EWB
EVAPORATOR AIR QUANTITY . . . . . 1200 CFM
ELECTRICAL CHARACTERISTICS 230-1-60

Select unit based on required cooling capacity

Enter Net Cooling Capacities table at condenser entering temperature of 95°F (35°C). The 036 unit at 1200 cfm and 67°F (19.4°C) ewb (entering wet bulb) will provide a total capacity of 34,600 Btuh and a SHC of 24,220 Btuh. Calculate SHC correction, if required, using Note 4 under Cooling Capacities tables.

Select electric heat

Enter the 036 unit Heating Extended Performance table at 1200 cfm. At 70°F (21.1°C) return indoor air and 20°F (-6.6°C) air entering outdoor coil, the integrated heating capacity is 16,810 Btuh. (Select integrated heating capacity value since deductions for outdoor-coil frost and defrosting have already been made. No correction is required.)

The required heating capacity is 36,000 Btuh. Therefore, at least 19,190 Btuh additional electric heat is required.

Determine additional electric heat capacity in kW.

$$\frac{19{,}190 \text{ Btuh}}{3414 \text{ Btuh/kW}} = 5.6\text{kW of heat required}$$

Enter the Electric Heater table on page 5 for 208/230v, single-phase, unit. The 7.2-kW heater at 240v most closely satisfies the heating required. To calculate kW at 230v, multiply the heater kW by multiplication factor 0.92 found in the Multiplication Factors table on page 29.

7.2 kW x 0.92 = 6.6 kW

6.6 kW x 3414 Btuh/kW = 22,532 Btuh

Total unit heating capacity is 39,342 Btuh

(16,810 + 22,532).

Select unit that corresponds to power source available

The Electrical Data table shows that the unit is designed to operate at 208/230-1-60.

PERFORMANCE DATA-STANDARD ECM INDOOR MOTOR

Cooling Extended Performance Table

50XT024 High Cool

EVAPORATOR AIR		CONDENSER ENTERING AIR TEMPERATURES deg F																	
		75 (23.8°C)			85 (29.4°C)			95 (35°C)			105 (40.5°C)			115 (46.1°C)			125 (51.6°C)		
CFM	EWB	Capacity MBtuh		Total System KW	Capacity MBtuh		Total System KW	Capacity MBtuh		Total System KW	Capacity MBtuh		Total System KW	Capacity MBtuh		Total System KW	Capacity MBtuh		Total System KW
		Total	Sens		Total	Sens		Total	Sens		Total	Sens		Total	Sens		Total	Sens	
700	57	21.77	21.77	1.61	20.88	20.88	1.79	19.95	19.95	2.00	18.94	18.94	2.23	17.86	17.86	2.48	16.66	16.66	2.77
	62	22.40	18.69	1.61	21.29	18.21	1.80	20.13	17.70	2.00	18.95	18.95	2.23	17.86	17.86	2.48	16.66	16.66	2.77
	63	22.85	15.18	1.62	21.71	14.70	1.80	20.52	14.21	2.01	19.25	13.70	2.23	17.90	13.16	2.48	16.42	12.58	2.77
	67	24.66	15.72	1.64	23.44	15.24	1.83	22.15	14.75	2.03	20.79	14.24	2.26	19.34	13.70	2.51	17.74	13.12	2.79
	72	27.16	12.75	1.67	25.83	12.28	1.86	24.42	11.80	2.06	22.94	11.29	2.29	21.33	10.76	2.54	19.57	10.18	2.83
800	57	22.76	22.76	1.64	21.81	21.81	1.82	20.81	20.81	2.03	19.74	19.74	2.26	18.58	18.58	2.51	17.29	17.29	2.80
	62	22.97	20.16	1.64	21.84	21.76	1.82	20.81	20.81	2.03	19.74	19.74	2.26	18.58	18.58	2.51	17.29	17.29	2.80
	63	23.39	16.20	1.64	22.19	15.71	1.83	20.94	15.21	2.03	19.62	14.69	2.26	18.22	14.14	2.51	16.69	13.54	2.79
	67	25.22	16.81	1.67	23.94	16.32	1.85	22.60	15.82	2.05	21.18	15.30	2.28	19.67	14.74	2.53	18.01	14.14	2.82
	72	27.77	13.43	1.70	26.37	12.96	1.88	24.90	12.48	2.09	23.35	11.95	2.31	21.66	11.41	2.57	20.60	11.05	2.57

50XT024 Low Cool

EVAPORATOR AIR		CONDENSER ENTERING AIR TEMPERATURES deg F																	
		75 (23.8°C)			85 (29.4°C)			95 (35°C)			105 (40.5°C)			115 (46.1°C)			125 (51.6°C)		
CFM	EWB	Capacity MBtuh		Total System KW	Capacity MBtuh		Total System KW	Capacity MBtuh		Total System KW	Capacity MBtuh		Total System KW	Capacity MBtuh		Total System KW	Capacity MBtuh		Total System KW
		Total	Sens		Total	Sens		Total	Sens		Total	Sens		Total	Sens		Total	Sens	
525	57	16.65	16.65	1.05	15.95	15.95	1.20	15.21	15.21	1.37	14.40	14.40	1.57	13.52	13.52	1.80	12.55	12.55	2.07
	62	17.20	14.47	1.06	16.29	14.07	1.21	15.34	13.65	1.37	14.40	14.40	1.57	13.52	13.52	1.80	12.55	12.55	2.07
	63	17.61	11.75	1.06	16.69	11.36	1.21	15.70	10.96	1.38	14.64	10.53	1.57	13.50	10.07	1.80	12.27	9.58	2.06
	67	19.23	12.26	1.08	18.23	11.87	1.22	17.18	11.47	1.39	16.05	11.03	1.58	14.83	10.58	1.81	13.50	10.09	2.07
	72	21.48	10.05	1.09	20.41	9.66	1.24	19.26	9.26	1.41	18.02	8.84	1.60	16.69	8.39	1.83	15.24	7.90	2.09
600	57	17.52	17.52	1.08	16.77	16.77	1.23	15.96	15.96	1.39	15.10	15.10	1.59	14.15	14.15	1.82	13.11	13.11	2.09
	62	17.71	15.66	1.08	16.78	16.75	1.23	15.96	15.96	1.39	15.10	15.10	1.59	14.15	14.15	1.82	13.12	13.12	2.09
	63	18.10	12.58	1.08	17.12	12.18	1.23	16.09	11.76	1.39	14.98	11.32	1.59	13.80	10.85	1.81	12.51	10.35	2.08
	67	19.75	13.14	1.09	18.71	12.74	1.24	17.60	12.32	1.41	16.41	11.88	1.60	15.14	11.41	1.83	13.76	10.91	2.09
	72	22.06	10.61	1.11	20.93	10.21	1.26	19.72	9.80	1.43	18.41	9.36	1.62	17.03	8.91	1.85	15.51	8.41	2.11

See page 29 for cooling notes.

PERFORMANCE DATA-STANDARD ECM INDOOR MOTOR

Heating Capacity

50XT024 High

INDOOR AIR		OUTDOOR COIL ENTERING AIR TEMPERATURES deg F														
		-10 (-23.3°C)			0 (-17.7°C)			10 (-12.2°C)			17 (-8.3°C)			20 (-6.6°C)		
EDB	CFM	Capacity MBtuh		Total System KW	Capacity MBtuh		Total System KW	Capacity MBtuh		Total System KW	Capacity MBtuh		Total System KW	Capacity MBtuh		Total System KW
		Total	Integ		Total	Integ		Total	Integ		Total	Integ		Total	Integ	
60	700	4.21	3.88	1.12	6.40	5.89	1.21	9.38	8.61	1.32	11.90	10.85	1.42	14.22	12.90	1.45
	800	4.24	3.90	1.11	6.47	5.95	1.20	9.46	8.69	1.31	11.94	10.89	1.43	14.27	12.94	1.44
70	700	3.97	3.65	1.25	6.12	5.63	1.35	9.01	8.27	1.46	11.51	10.49	1.55	12.36	11.21	1.49
	800	4.02	3.70	1.24	6.20	5.71	1.34	9.12	8.37	1.45	11.60	10.58	1.55	12.46	11.30	1.66
80	700	3.77	3.47	1.38	5.83	5.36	1.49	8.62	7.91	1.61	11.03	10.06	1.70	11.85	10.75	1.75
	800	3.82	3.51	1.38	5.91	5.43	1.48	8.74	8.02	1.59	11.17	10.19	1.69	12.00	10.88	1.72

50XT024 High Con't.

INDOOR AIR		OUTDOOR COIL ENTERING AIR TEMPERATURES deg F														
		30 (-1.1°C)			40 (4.4°C)			47 (8.3°C)			50 (10°C)			60 (15.5°C)		
EDB	CFM	Capacity MBtuh		Total System KW	Capacity MBtuh		Total System KW	Capacity MBtuh		Total System KW	Capacity MBtuh		Total System KW	Capacity MBtuh		Total System KW
		Total	Integ		Total	Integ		Total	Integ		Total	Integ		Total	Integ	
60	700	16.65	14.60	1.58	19.30	19.30	1.69	21.15	21.15	1.75	22.00	22.00	1.78	25.14	25.14	1.92
	800	16.84	14.76	1.53	19.36	19.36	1.61	21.27	21.27	1.66	22.16	22.16	1.70	25.40	25.40	1.82
70	700	16.03	14.05	1.62	18.69	18.69	1.86	20.68	20.68	1.95	21.51	21.51	1.98	24.54	24.54	2.11
	800	16.25	14.24	1.68	18.95	18.95	1.79	20.80	20.80	1.85	21.65	21.65	1.87	24.82	24.82	2.00
80	700	14.91	13.06	1.89	17.97	17.97	2.03	20.04	20.04	2.14	20.96	20.96	2.20	23.91	23.91	2.32
	800	15.10	13.23	1.84	18.27	18.27	1.96	20.30	20.30	2.05	21.13	21.13	2.08	24.20	24.20	2.21

LEGEND

Cap.— Heating Capacity (1000 Btuh) (Includes Indoor–Fan Motor Heat)

db — Dry Bulb

kW — Total Power Input (Includes Compressor Motor Power Input Outdoor–Fan Motor Input, and Indoor–Fan Motor Input)

rh — Relative Humidity

NOTES:

Integrated capacity is maximum (instantaneous) capacity less the effect of frost on the outdoor coil and the heat required to defrost it.

PERFORMANCE DATA-STANDARD ECM INDOOR MOTOR

Heating Capacity

50XT024 Low

INDOOR AIR		OUTDOOR COIL ENTERING AIR TEMPERATURES deg F														
		-10 (-23.3°C)			0 (-17.7°C)			10 (-12.2°C)			17 (-8.3°C)			20 (-6.6°C)		
EDB	CFM	Capacity MBtuh		Total System KW	Capacity MBtuh		Total System KW	Capacity MBtuh		Total System KW	Capacity MBtuh		Total System KW	Capacity MBtuh		Total System KW
		Total	Integ		Total	Integ		Total	Integ		Total	Integ		Total	Integ	
60	525	2.95	2.72	1.05	4.89	4.50	1.11	7.22	6.63	1.18	8.74	7.97	1.22	9.48	8.60	1.24
	600	2.99	2.75	1.04	4.97	4.58	1.09	7.31	6.71	1.17	8.89	8.11	1.20	9.64	8.74	1.22
70	525	2.81	2.59	1.22	4.72	4.34	1.29	6.73	6.18	1.35	8.26	7.53	1.38	8.97	8.14	1.40
	600	2.87	2.64	1.21	4.80	4.41	1.28	6.87	6.30	1.34	8.40	7.66	1.37	9.13	8.28	1.38
80	525	2.61	2.41	1.37	4.45	4.09	1.46	6.26	5.75	1.52	7.78	7.10	1.56	8.46	7.68	1.57
	600	2.66	2.46	1.36	4.53	4.16	1.44	6.38	5.86	1.51	7.92	7.22	1.54	8.60	7.80	1.56

50XT024 Low Con't.

INDOOR AIR		OUTDOOR COIL ENTERING AIR TEMPERATURES deg F														
		30 (-1.1°C)			40 (4.4°C)			47 (8.3°C)			50 (10°C)			60 (15.5°C)		
EDB	CFM	Capacity MBtuh		Total System KW	Capacity MBtuh		Total System KW	Capacity MBtuh		Total System KW	Capacity MBtuh		Total System KW	Capacity MBtuh		Total System KW
		Total	Integ		Total	Integ		Total	Integ		Total	Integ		Total	Integ	
60	525	12.17	10.66	1.30	15.20	15.20	1.37	17.28	17.28	1.41	18.16	18.16	1.44	19.43	19.43	1.44
	600	12.37	10.84	1.27	15.22	15.22	1.33	16.79	16.79	1.37	16.85	16.85	1.36	16.78	16.78	1.29
70	525	11.60	10.17	1.46	14.55	14.55	1.54	16.84	16.84	1.61	17.86	17.86	1.64	20.96	20.96	1.71
	600	11.80	10.34	1.43	14.80	14.80	1.50	16.80	16.80	1.54	17.64	17.64	1.57	18.39	18.39	1.53
80	525	11.00	9.64	1.64	13.91	13.91	1.72	16.15	16.15	1.79	17.17	17.17	1.83	20.53	20.53	1.91
	600	11.21	9.83	1.61	14.16	14.16	1.68	16.40	16.40	1.74	17.36	17.36	1.77	20.33	20.33	1.85

LEGEND

Cap.— Heating Capacity (1000 Btuh) (Includes Indoor–Fan Motor Heat)

db — Dry Bulb

kW — Total Power Input (Includes Compressor Motor Power Input Outdoor–Fan Motor Input, and Indoor–Fan Motor Input)

rh — Relative Humidity

NOTES:

Integrated capacity is maximum (instantaneous) capacity less the effect of frost on the outdoor coil and the heat required to defrost it.

PERFORMANCE DATA-STANDARD ECM INDOOR MOTOR

Cooling Extended Performance Table

50XT030 High Cool

EVAPORATOR AIR		CONDENSER ENTERING AIR TEMPERATURES deg F																	
		75 (23.8°C)			85 (29.4°C)			95 (35°C)			105 (40.5°C)			115 (46.1°C)			125 (51.6°C)		
CFM	EWB	Capacity MBtuh		Total System KW	Capacity MBtuh		Total System KW	Capacity MBtuh		Total System KW	Capacity MBtuh		Total System KW	Capacity MBtuh		Total System KW	Capacity MBtuh		Total System KW
		Total	Sens		Total	Sens		Total	Sens		Total	Sens		Total	Sens		Total	Sens	
875	57	27.90	27.90	2.05	26.73	26.73	2.27	25.47	25.47	2.52	24.09	24.09	2.79	22.56	22.56	3.10	20.81	20.81	3.44
	62	28.72	23.85	2.06	27.25	23.21	2.28	25.70	22.53	2.52	24.09	24.09	2.79	22.56	22.56	3.10	20.81	20.81	3.44
	63	29.28	19.34	2.07	27.78	18.72	2.29	26.18	18.07	2.53	24.46	17.38	2.80	22.58	16.64	3.10	20.50	15.82	3.43
	67	31.48	19.99	2.10	29.85	19.36	2.32	28.11	18.70	2.56	26.23	18.00	2.83	24.19	17.25	3.13	21.92	16.42	3.47
	72	34.49	16.13	2.14	32.69	15.50	2.36	30.77	14.85	2.61	28.70	14.15	2.88	26.43	13.40	3.18	26.31	13.36	3.19
1000	57	29.10	29.10	2.09	27.84	27.84	2.32	26.48	26.48	2.56	25.00	25.00	2.84	23.34	23.34	3.15	21.47	21.47	3.49
	62	29.40	25.68	2.10	27.90	27.75	2.32	26.48	26.48	2.56	25.00	25.00	2.84	23.34	23.34	3.15	21.47	21.47	3.49
	63	29.91	20.61	2.10	28.33	19.98	2.32	26.66	19.31	2.57	24.86	18.60	2.83	22.90	17.84	3.13	20.75	17.00	3.47
	67	32.13	21.34	2.14	30.42	20.69	2.36	28.60	20.02	2.60	26.64	19.30	2.87	24.51	18.53	3.17	22.47	16.98	3.51
	72	35.18	16.96	2.18	33.29	16.32	2.40	31.27	15.65	2.65	29.11	14.94	2.92	26.76	14.18	3.22	24.19	13.36	3.55

50XT030 Low Cool

EVAPORATOR AIR		CONDENSER ENTERING AIR TEMPERATURES deg F																	
		75 (23.8°C)			85 (29.4°C)			95 (35°C)			105 (40.5°C)			115 (46.1°C)			125 (51.6°C)		
CFM	EWB	Capacity MBtuh		Total System KW	Capacity MBtuh		Total System KW	Capacity MBtuh		Total System KW	Capacity MBtuh		Total System KW	Capacity MBtuh		Total System KW	Capacity MBtuh		Total System KW
		Total	Sens		Total	Sens		Total	Sens		Total	Sens		Total	Sens		Total	Sens	
615	57	20.32	20.32	1.29	19.50	19.50	1.48	18.60	18.60	1.70	17.60	17.60	1.95	16.20	16.20	2.21	15.23	15.23	2.58
	62	21.08	17.65	1.30	20.01	17.18	1.49	18.86	16.67	1.70	17.62	17.58	1.95	16.49	16.49	2.24	15.23	15.23	2.58
	63	21.55	14.40	1.30	20.47	13.94	1.49	19.28	13.44	1.70	17.99	12.90	1.95	16.58	12.33	2.24	15.02	11.71	2.58
	67	23.40	14.96	1.32	22.22	14.49	1.51	20.93	13.99	1.72	19.51	13.44	1.97	17.97	12.85	2.26	16.26	12.24	2.60
	72	25.95	12.26	1.35	24.65	11.79	1.53	23.20	11.28	1.75	21.63	10.73	2.00	19.91	10.14	2.28	18.01	9.51	2.62
700	57	21.32	21.32	1.31	20.44	20.44	1.50	19.46	19.46	1.72	18.38	18.38	1.97	17.17	17.17	2.26	15.82	15.82	2.60
	62	21.67	19.04	1.31	20.56	18.54	1.50	19.46	19.46	1.72	18.38	18.38	1.97	17.17	17.17	2.26	15.82	15.82	2.60
	63	22.13	15.36	1.32	20.98	14.89	1.51	19.74	14.38	1.72	18.38	13.83	1.97	16.90	13.24	2.26	15.28	12.60	2.60
	67	24.00	15.98	1.34	22.76	15.50	1.53	21.40	14.98	1.74	19.91	14.42	1.99	18.29	13.82	2.28	16.52	13.17	2.61
	72	26.61	12.91	1.36	25.22	12.42	1.55	23.71	11.90	1.76	22.06	11.34	2.01	20.25	10.74	2.30	18.28	10.09	2.63

See page 29 for cooling notes.

PERFORMANCE DATA-STANDARD ECM INDOOR MOTOR

Heating Capacity

50XT030 High

INDOOR AIR		OUTDOOR COIL ENTERING AIR TEMPERATURES deg F														
		-10 (-23.3°C)			0 (-17.7°C)			10 (-12.2°C)			17 (-8.3°C)			20 (-6.6°C)		
EDB	CFM	Capacity MBtuh		Total System KW	Capacity MBtuh		Total System KW	Capacity MBtuh		Total System KW	Capacity MBtuh		Total System KW	Capacity MBtuh		Total System KW
		Total	Integ		Total	Integ		Total	Integ		Total	Integ		Total	Integ	
60	875	7.07	6.51	1.56	9.35	8.60	1.64	12.08	11.09	1.72	14.34	13.07	1.78	15.42	13.99	1.81
	1000	7.16	6.59	1.56	9.46	8.70	1.64	12.23	11.23	1.71	14.51	13.23	1.77	15.61	14.16	1.79
70	875	6.74	6.20	1.73	9.00	8.28	1.82	11.66	10.70	1.91	13.82	12.60	1.97	14.85	13.46	2.00
	1000	6.84	6.29	1.73	9.12	8.39	1.82	11.80	10.83	1.90	14.00	12.76	1.95	15.04	13.64	1.98
80	875	6.31	5.81	1.90	8.56	7.88	2.00	11.20	10.28	2.10	13.30	12.13	2.17	14.28	12.95	2.20
	1000	6.42	5.91	1.90	8.69	8.00	2.00	11.35	10.42	2.09	13.48	12.29	2.15	14.46	13.11	2.18

50XT030 High Con't.

INDOOR AIR		OUTDOOR COIL ENTERING AIR TEMPERATURES deg F														
		30 (-1.1°C)			40 (4.4°C)			47 (8.3°C)			50 (10°C)			60 (15.5°C)		
EDB	CFM	Capacity MBtuh		Total System KW	Capacity MBtuh		Total System KW	Capacity MBtuh		Total System KW	Capacity MBtuh		Total System KW	Capacity MBtuh		Total System KW
		Total	Integ		Total	Integ		Total	Integ		Total	Integ		Total	Integ	
60	875	19.48	17.07	1.91	24.32	24.32	2.04	28.09	28.09	2.08	29.61	29.61	2.12	35.99	35.99	2.18
	1000	19.75	17.31	1.89	24.63	24.63	2.02	28.28	28.28	2.15	30.05	30.05	2.19	36.32	36.32	2.32
70	875	18.76	16.44	2.11	23.39	23.39	2.23	27.23	27.23	2.34	29.07	29.07	2.40	35.34	35.34	2.46
	1000	19.03	16.67	2.08	23.75	23.75	2.20	27.60	27.60	2.31	29.24	29.24	2.34	35.85	35.85	2.54
80	875	18.00	15.77	2.31	22.48	22.48	2.44	26.17	26.17	2.56	27.94	27.94	2.62	34.42	34.42	2.70
	1000	18.32	16.05	2.28	22.83	22.83	2.40	26.59	26.59	2.51	28.38	28.38	2.57	34.50	34.50	2.82

LEGEND

Cap.— Heating Capacity (1000 Btuh) (Includes Indoor–Fan Motor Heat)

db — Dry Bulb

kW — Total Power Input (Includes Compressor Motor Power Input Outdoor–Fan Motor Input, and Indoor–Fan Motor Input)

rh — Relative Humidity

NOTES:

Integrated capacity is maximum (instantaneous) capacity less the effect of frost on the outdoor coil and the heat required to defrost it.

PERFORMANCE DATA-STANDARD ECM INDOOR MOTOR

Heating Capacity

50XT030 Low

INDOOR AIR		OUTDOOR COIL ENTERING AIR TEMPERATURES deg F														
		-10 (-23.3°C)			0 (-17.7°C)			10 (-12.2°C)			17 (-8.3°C)			20 (-6.6°C)		
EDB	CFM	Capacity MBtuh		Total System KW	Capacity MBtuh		Total System KW	Capacity MBtuh		Total System KW	Capacity MBtuh		Total System KW	Capacity MBtuh		Total System KW
		Total	Integ		Total	Integ		Total	Integ		Total	Integ		Total	Integ	
60	615	3.77	3.47	1.12	5.75	5.29	1.20	8.06	7.40	1.27	9.90	9.03	1.32	10.75	9.75	1.34
	700	3.81	3.51	1.12	5.82	5.36	1.19	8.16	7.49	1.25	10.01	9.13	1.29	10.87	9.86	1.31
70	615	3.34	3.07	1.29	5.44	5.00	1.38	7.66	7.03	1.46	9.47	8.64	1.51	10.31	9.35	1.53
	700	3.42	3.15	1.29	5.55	5.10	1.37	7.75	7.11	1.44	9.60	8.75	1.48	10.45	9.47	1.50
80	615	2.85	2.62	1.47	4.84	4.45	1.57	7.16	6.57	1.65	8.97	8.18	1.71	9.80	8.89	1.73
	700	2.91	2.68	1.47	4.93	4.54	1.56	7.27	6.67	1.63	9.10	8.30	1.68	9.94	9.02	1.70

50XT030 Low Con't.

INDOOR AIR		OUTDOOR COIL ENTERING AIR TEMPERATURES deg F														
		30 (-1.1°C)			40 (4.4°C)			47 (8.3°C)			50 (10°C)			60 (15.5°C)		
EDB	CFM	Capacity MBtuh		Total System KW	Capacity MBtuh		Total System KW	Capacity MBtuh		Total System KW	Capacity MBtuh		Total System KW	Capacity MBtuh		Total System KW
		Total	Integ		Total	Integ		Total	Integ		Total	Integ		Total	Integ	
60	615	13.95	12.23	1.41	17.78	17.78	1.50	20.83	20.83	1.57	22.25	22.25	1.61	27.83	27.83	1.75
	700	14.14	12.39	1.37	18.04	18.04	1.45	21.17	21.17	1.51	22.64	22.64	1.54	28.00	28.00	1.62
70	615	13.39	11.73	1.61	17.11	17.11	1.70	20.08	20.08	1.78	21.45	21.45	1.81	26.70	26.70	1.96
	700	13.58	11.90	1.57	17.39	17.39	1.65	20.40	20.40	1.71	21.80	21.80	1.74	27.26	27.26	1.87
80	615	12.86	11.27	1.82	16.41	16.41	1.92	19.37	19.37	2.01	20.70	20.70	2.05	25.66	25.66	2.20
	700	13.03	11.42	1.78	16.66	16.66	1.86	19.66	19.66	1.93	21.02	21.02	1.96	26.16	26.16	2.09

LEGEND

Cap.— Heating Capacity (1000 Btuh) (Includes Indoor–Fan Motor Heat)

db — Dry Bulb

kW — Total Power Input (Includes Compressor Motor Power Input Outdoor–Fan Motor Input, and Indoor–Fan Motor Input)

rh — Relative Humidity

NOTES:

Integrated capacity is maximum (instantaneous) capacity less the effect of frost on the outdoor coil and the heat required to defrost it.

PERFORMANCE DATA-STANDARD ECM INDOOR MOTOR

Cooling Extended Performance Table

50XT036 High Cool

EVAPORATOR AIR		CONDENSER ENTERING AIR TEMPERATURES deg F																	
		75 (23.8°C)			85 (29.4°C)			95 (35°C)			105 (40.5°C)			115 (46.1°C)			125 (51.6°C)		
CFM	EWB	Capacity MBtuh		Total System KW	Capacity MBtuh		Total System KW	Capacity MBtuh		Total System KW	Capacity MBtuh		Total System KW	Capacity MBtuh		Total System KW	Capacity MBtuh		Total System KW
		Total	Sens		Total	Sens		Total	Sens		Total	Sens		Total	Sens		Total	Sens	
1050	57	33.64	33.64	2.28	32.32	32.32	2.53	30.90	30.90	2.81	29.36	29.36	3.11	27.65	27.65	3.46	25.71	25.71	3.84
	62	34.47	28.72	2.29	32.83	28.00	2.54	31.11	27.24	2.81	29.36	29.36	3.11	27.65	27.65	3.46	25.71	25.71	3.84
	63	35.12	23.25	2.29	33.44	22.56	2.54	31.65	21.83	2.81	29.73	21.07	3.12	27.64	20.25	3.45	25.33	19.35	3.83
	67	37.76	24.04	2.32	35.94	23.34	2.57	34.00	22.61	2.84	31.91	21.83	3.15	29.65	21.00	3.49	27.14	20.10	3.87
	73	42.16	18.41	2.37	40.12	17.73	2.62	37.93	17.01	2.90	35.58	16.24	3.20	33.02	15.43	3.54	30.21	14.53	3.92
1200	57	35.06	35.06	2.32	33.64	33.64	2.58	32.12	32.12	2.85	30.46	30.46	3.16	28.63	28.63	3.50	26.56	26.56	3.89
	62	35.29	30.91	2.33	33.64	33.64	2.58	32.12	32.12	2.85	30.46	30.46	3.16	28.63	28.63	3.50	26.56	26.56	3.89
	63	35.86	24.79	2.33	34.09	24.08	2.58	32.22	23.34	2.85	30.23	22.56	3.15	28.05	21.71	3.49	25.66	20.78	3.87
	67	38.52	25.68	2.36	36.62	24.97	2.61	34.60	24.22	2.88	32.43	23.43	3.19	30.06	22.57	3.53	27.47	21.64	3.90
	73	42.99	19.31	2.41	40.85	18.61	2.66	38.57	17.87	2.93	36.13	17.09	3.24	33.48	16.25	3.58	30.56	15.35	3.96

50XT036 Low Cool

EVAPORATOR AIR		CONDENSER ENTERING AIR TEMPERATURES deg F																	
		75 (23.8°C)			85 (29.4°C)			95 (35°C)			105 (40.5°C)			115 (46.1°C)			125 (51.6°C)		
CFM	EWB	Capacity MBtuh		Total System KW	Capacity MBtuh		Total System KW	Capacity MBtuh		Total System KW	Capacity MBtuh		Total System KW	Capacity MBtuh		Total System KW	Capacity MBtuh		Total System KW
		Total	Sens		Total	Sens		Total	Sens		Total	Sens		Total	Sens		Total	Sens	
745	57	23.27	23.27	1.46	22.34	22.34	1.65	21.31	21.31	1.87	20.19	20.19	2.12	18.95	18.95	2.41	17.58	17.58	2.76
	62	23.91	20.06	1.46	22.70	19.54	1.65	21.41	18.97	1.87	20.19	20.19	2.12	18.95	18.95	2.41	17.58	17.58	2.76
	63	24.46	16.28	1.47	23.21	15.77	1.66	21.87	15.23	1.87	20.42	14.65	2.12	18.85	14.03	2.41	17.14	13.36	2.75
	67	26.63	16.96	1.48	25.29	16.45	1.67	23.85	15.90	1.89	22.28	15.32	2.14	20.58	14.69	2.43	18.72	14.02	2.77
	72	29.67	13.86	1.51	28.20	13.35	1.70	26.61	12.81	1.91	24.89	12.23	2.16	23.01	11.60	2.45	20.96	10.93	2.79
850	57	24.45	24.45	1.48	23.43	23.43	1.67	22.33	22.33	1.89	21.11	21.11	2.14	19.80	19.80	2.44	18.32	18.32	2.78
	62	24.61	21.68	1.48	23.43	23.43	1.67	22.33	22.33	1.89	21.12	21.12	2.14	19.80	19.80	2.44	18.32	18.32	2.78
	63	25.11	17.42	1.49	23.80	16.89	1.68	22.39	16.34	1.89	20.88	15.74	2.14	19.24	15.10	2.43	17.46	14.42	2.77
	67	27.33	18.17	1.50	25.92	17.64	1.69	24.40	17.08	1.91	22.76	16.48	2.15	20.99	15.84	2.44	19.06	15.15	2.78
	72	30.44	14.64	1.53	28.89	14.12	1.71	27.21	13.55	1.93	25.40	12.96	2.17	23.45	12.33	2.46	21.30	11.65	2.80

See page 29 for cooling notes.

PERFORMANCE DATA-STANDARD ECM INDOOR MOTOR

Heating Capacity

50XT036 High

INDOOR AIR		OUTDOOR COIL ENTERING AIR TEMPERATURES deg F														
		-10 (-23.3°C)			0 (-17.7°C)			10 (-12.2°C)			17 (-8.3°C)			20 (-6.6°C)		
EDB	CFM	Capacity MBtuh		Total System KW	Capacity MBtuh		Total System KW	Capacity MBtuh		Total System KW	Capacity MBtuh		Total System KW	Capacity MBtuh		Total System KW
		Total	Integ		Total	Integ		Total	Integ		Total	Integ		Total	Integ	
60	1050	8.62	7.93	1.43	11.33	10.43	1.60	14.73	13.52	1.78	17.57	16.02	1.92	18.91	17.15	1.99
	1200	8.70	8.01	1.43	11.45	10.53	1.59	14.88	13.66	1.77	17.76	16.19	1.90	19.11	17.33	1.97
70	1050	8.34	7.68	1.59	11.02	10.14	1.77	14.26	13.09	1.97	16.99	15.49	2.12	18.32	16.61	2.19
	1200	8.44	7.77	1.59	11.14	10.25	1.77	14.42	13.24	1.96	17.20	15.68	2.10	18.53	16.81	2.17
80	1050	7.96	7.32	1.74	10.60	9.76	1.95	13.78	12.65	2.17	16.38	14.93	2.33	17.63	15.99	2.40
	1200	8.07	7.43	1.74	10.74	9.88	1.94	13.93	12.79	2.15	16.59	15.12	2.31	17.86	16.19	2.38

50XT036 High Con't.

INDOOR AIR		OUTDOOR COIL ENTERING AIR TEMPERATURES deg F														
		30 (-1.1°C)			40 (4.4°C)			47 (8.3°C)			50 (10°C)			60 (15.5°C)		
EDB	CFM	Capacity MBtuh		Total System KW	Capacity MBtuh		Total System KW	Capacity MBtuh		Total System KW	Capacity MBtuh		Total System KW	Capacity MBtuh		Total System KW
		Total	Integ		Total	Integ		Total	Integ		Total	Integ		Total	Integ	
60	1050	23.95	20.99	2.22	29.99	29.99	2.51	34.51	34.51	2.69	36.57	36.57	2.79	43.09	43.09	3.12
	1200	24.20	21.21	2.20	30.20	30.20	2.45	34.82	34.82	2.67	36.95	36.95	2.74	43.39	43.39	2.88
70	1050	23.16	20.29	2.44	28.99	28.99	2.73	33.82	33.82	2.98	35.98	35.98	3.08	42.90	42.90	3.44
	1200	23.44	20.54	2.41	29.28	29.28	2.71	33.60	33.60	2.90	35.59	35.59	3.00	43.10	43.10	3.30
80	1050	22.38	19.61	2.67	28.03	28.03	2.99	32.65	32.65	3.24	34.87	34.87	3.37	42.66	42.66	3.75
	1200	22.66	19.86	2.64	28.36	28.36	2.94	33.00	33.00	3.21	34.97	34.97	3.29	42.80	42.80	3.69

PERFORMANCE DATA-STANDARD ECM INDOOR MOTOR

Heating Capacity

50XT036 Low

INDOOR AIR		OUTDOOR COIL ENTERING AIR TEMPERATURES deg F														
		-10 (-23.3°C)			0 (-17.7°C)			10 (-12.2°C)			17 (-8.3°C)			20 (-6.6°C)		
EDB	CFM	Capacity MBtuh		Total System KW	Capacity MBtuh		Total System KW	Capacity MBtuh		Total System KW	Capacity MBtuh		Total System KW	Capacity MBtuh		Total System KW
		Total	Integ		Total	Integ		Total	Integ		Total	Integ		Total	Integ	
60	745	3.84	3.53	1.62	6.63	6.10	1.68	9.48	8.70	1.72	11.69	10.66	1.74	12.69	11.51	1.75
	850	3.91	3.60	1.62	6.71	6.17	1.67	9.61	8.82	1.70	11.84	10.80	1.71	12.85	11.66	1.72
70	745	3.10	2.86	1.82	5.88	5.41	1.89	8.83	8.10	1.93	11.03	10.06	1.95	12.02	10.90	1.96
	850	3.23	2.98	1.82	6.01	5.53	1.89	8.98	8.24	1.92	11.20	10.21	1.93	12.20	11.07	1.94
80	745	2.22	2.05	2.03	5.00	4.60	2.10	8.01	7.35	2.15	10.24	9.33	2.18	11.23	10.18	2.19
	850	2.34	2.16	2.04	5.12	4.71	2.11	8.17	7.49	2.14	10.42	9.50	2.16	11.42	10.36	2.16

50XT036 Low Con't.

INDOOR AIR		OUTDOOR COIL ENTERING AIR TEMPERATURES deg F														
		30 (-1.1°C)			40 (4.4°C)			47 (8.3°C)			50 (10°C)			60 (15.5°C)		
EDB	CFM	Capacity MBtuh		Total System KW	Capacity MBtuh		Total System KW	Capacity MBtuh		Total System KW	Capacity MBtuh		Total System KW	Capacity MBtuh		Total System KW
		Total	Integ		Total	Integ		Total	Integ		Total	Integ		Total	Integ	
60	745	16.25	14.24	1.78	20.33	20.33	1.81	23.56	23.56	1.84	25.01	25.01	1.85	30.27	30.27	1.90
	850	16.46	14.42	1.74	20.70	20.70	1.76	23.96	23.96	1.78	25.46	25.46	1.78	30.88	30.88	1.82
70	745	15.55	13.62	1.99	19.45	19.45	2.02	22.61	22.61	2.05	24.02	24.02	2.06	29.09	29.09	2.11
	850	15.78	13.82	1.95	19.78	19.78	1.97	23.00	23.00	1.98	24.44	24.44	1.99	29.68	29.68	2.02
80	745	14.74	12.91	2.22	18.60	18.60	2.26	21.56	21.56	2.28	22.94	22.94	2.29	27.95	27.95	2.35
	850	14.98	13.13	2.18	18.90	18.90	2.20	21.95	21.95	2.21	23.44	23.44	2.22	28.50	28.50	2.25

LEGEND

Cap.— Heating Capacity (1000 Btuh) (Includes Indoor–Fan Motor Heat)

db — Dry Bulb

kW — Total Power Input (Includes Compressor Motor Power Input Outdoor–Fan Motor Input, and Indoor–Fan Motor Input)

rh — Relative Humidity

NOTES:

Integrated capacity is maximum (instantaneous) capacity less the effect of frost on the outdoor coil and the heat required to defrost it.

PERFORMANCE DATA-STANDARD ECM INDOOR MOTOR

Cooling Extended Performance Table

50XT042 High Cool

EVAPORATOR AIR		CONDENSER ENTERING AIR TEMPERATURES deg F																	
		75 (23.8°C)			85 (29.4°C)			95 (35°C)			105 (40.5°C)			115 (46.1°C)			125 (51.6°C)		
CFM	EWB	Capacity MBtuh		Total System KW	Capacity MBtuh		Total System KW	Capacity MBtuh		Total System KW	Capacity MBtuh		Total System KW	Capacity MBtuh		Total System KW	Capacity MBtuh		Total System KW
		Total	Sens		Total	Sens		Total	Sens		Total	Sens		Total	Sens		Total	Sens	
1225	57	40.34	40.34	2.76	38.56	38.56	3.03	36.60	36.60	3.32	35.21	35.21	3.58	32.79	32.79	3.93	29.04	29.04	4.37
	62	41.24	37.05	2.77	39.06	36.02	3.04	36.71	36.39	3.33	35.21	35.21	3.57	32.79	32.79	3.93	29.04	29.04	4.37
	63	42.00	29.94	2.78	39.74	28.96	3.05	37.29	27.90	3.34	35.56	27.16	3.58	32.52	25.89	3.92	28.29	24.13	4.35
	67	45.04	30.93	2.84	42.59	29.93	3.10	39.90	28.85	3.39	38.03	28.11	3.63	34.81	26.85	3.98	30.12	25.04	4.40
	72	49.21	24.77	2.91	46.48	23.77	3.17	43.50	22.69	3.46	44.33	22.99	3.52	41.24	21.88	3.87	32.75	18.96	4.47
1400	57	41.96	41.96	2.82	40.04	40.04	3.10	37.92	37.92	3.39	36.46	36.46	3.64	33.86	33.86	4.00	29.82	29.82	4.43
	62	42.17	39.80	2.83	40.04	40.04	3.10	37.92	37.92	3.39	36.46	36.46	3.64	33.86	33.86	4.00	29.82	29.82	4.43
	63	42.81	31.90	2.84	40.45	30.89	3.10	37.88	29.81	3.39	36.05	29.03	3.63	31.99	27.35	4.03	28.59	25.92	4.40
	67	45.87	33.01	2.89	43.30	31.98	3.15	40.50	30.88	3.44	38.65	30.16	3.69	35.36	28.88	4.03	30.38	26.96	4.45
	72	50.09	26.04	2.96	47.23	25.02	3.23	44.13	23.92	3.51	45.09	24.26	3.58	41.83	23.12	3.93	32.98	20.13	4.51

50XT042 Low Cool

EVAPORATOR AIR		CONDENSER ENTERING AIR TEMPERATURES deg F																	
		75 (23.8°C)			85 (29.4°C)			95 (35°C)			105 (40.5°C)			115 (46.1°C)			125 (51.6°C)		
CFM	EWB	Capacity MBtuh		Total System KW	Capacity MBtuh		Total System KW	Capacity MBtuh		Total System KW	Capacity MBtuh		Total System KW	Capacity MBtuh		Total System KW	Capacity MBtuh		Total System KW
		Total	Sens		Total	Sens		Total	Sens		Total	Sens		Total	Sens		Total	Sens	
855	57	28.20	28.20	1.89	27.00	27.00	2.11	25.67	25.67	2.35	24.16	24.16	2.63	22.43	22.43	2.94	20.50	20.50	3.29
	62	28.99	24.09	1.89	27.46	23.43	2.11	26.46	22.99	2.31	24.16	24.16	2.63	22.43	22.43	2.94	20.48	20.48	3.29
	63	29.61	19.56	1.89	28.04	18.92	2.11	26.32	18.23	2.35	24.41	17.47	2.63	22.29	16.64	2.95	19.93	15.73	3.30
	67	32.05	20.31	1.89	30.33	19.65	2.11	28.43	18.94	2.35	26.33	18.16	2.62	23.99	17.30	2.92	21.52	16.42	3.28
	72	35.41	16.51	1.89	33.47	15.84	2.10	31.36	15.12	2.34	31.76	15.26	2.28	26.40	13.49	2.90	24.07	12.74	3.25
975	57	29.53	29.53	1.90	28.23	28.23	2.12	26.78	26.78	2.36	25.14	25.14	2.64	23.27	23.27	2.95	21.29	21.29	3.29
	62	29.77	25.99	1.90	28.23	28.23	2.12	26.78	26.78	2.36	25.14	25.14	2.64	23.27	23.27	2.95	21.29	21.29	3.29
	63	30.34	20.89	1.90	28.69	20.23	2.12	26.88	19.52	2.37	24.87	18.73	2.64	22.66	17.88	2.96	20.20	16.93	3.31
	67	32.81	21.71	1.91	31.00	21.04	2.12	29.00	20.30	2.36	28.00	19.93	2.59	24.36	18.62	2.93	21.97	17.76	3.29
	72	36.21	17.40	1.91	34.17	16.72	2.12	31.95	16.00	2.35	31.03	15.68	2.58	30.23	15.42	2.60	24.42	13.57	3.26

See page 29 for cooling notes.

PERFORMANCE DATA-STANDARD ECM INDOOR MOTOR

Heating Capacity

50XT042 High

INDOOR AIR		OUTDOOR COIL ENTERING AIR TEMPERATURES deg F														
		-10 (-23.3°C)			0 (-17.7°C)			10 (-12.2°C)			17 (-8.3°C)			20 (-6.6°C)		
EDB	CFM	Capacity MBtuh		Total System KW	Capacity MBtuh		Total System KW	Capacity MBtuh		Total System KW	Capacity MBtuh		Total System KW	Capacity MBtuh		Total System KW
		Total	Integ		Total	Integ		Total	Integ		Total	Integ		Total	Integ	
60	1225	10.65	9.80	2.06	13.99	12.87	2.19	17.85	16.39	2.32	21.02	19.17	2.41	22.53	20.43	2.46
	1400	10.79	9.92	2.08	14.15	13.02	2.20	18.04	16.56	2.32	21.26	19.39	2.41	22.79	20.67	2.45
70	1225	10.16	9.34	2.28	13.49	12.42	2.42	17.32	15.89	2.55	20.37	18.58	2.66	21.80	19.77	2.70
	1400	10.32	9.49	2.29	13.66	12.57	2.42	17.52	16.08	2.55	20.60	18.78	2.65	22.06	20.01	2.69
80	1225	9.53	8.77	2.49	12.89	11.86	2.64	16.69	15.32	2.80	19.70	17.96	2.91	21.10	19.14	2.96
	1400	9.69	8.92	2.51	13.07	12.03	2.65	16.90	15.51	2.80	19.94	18.18	2.90	21.36	19.37	2.94

50XT042 High Con't.

INDOOR AIR		OUTDOOR COIL ENTERING AIR TEMPERATURES deg F														
		30 (-1.1°C)			40 (4.4°C)			47 (8.3°C)			50 (10°C)			60 (15.5°C)		
EDB	CFM	Capacity MBtuh		Total System KW	Capacity MBtuh		Total System KW	Capacity MBtuh		Total System KW	Capacity MBtuh		Total System KW	Capacity MBtuh		Total System KW
		Total	Integ		Total	Integ		Total	Integ		Total	Integ		Total	Integ	
60	1225	28.26	24.77	2.62	35.01	35.01	2.81	40.36	40.36	2.97	42.96	42.96	3.05	51.37	51.37	3.25
	1400	28.60	25.06	2.60	35.38	35.38	2.79	40.37	40.37	2.91	43.00	43.00	2.96	51.50	51.50	3.19
70	1225	27.38	23.99	2.87	33.83	33.83	3.06	39.05	39.05	3.22	41.60	41.60	3.31	50.54	50.54	3.54
	1400	27.71	24.28	2.85	34.27	34.27	3.03	39.50	39.50	3.20	41.96	41.96	3.27	50.80	50.80	3.48
80	1225	26.37	23.10	3.13	32.67	32.67	3.34	37.72	37.72	3.50	40.19	40.19	3.59	49.42	49.42	3.92
	1400	26.72	23.41	3.11	33.12	33.12	3.30	38.23	38.23	3.46	40.71	40.71	3.55	49.70	49.70	3.78

LEGEND

Cap.— Heating Capacity (1000 Btuh) (Includes Indoor–Fan Motor Heat)

db — Dry Bulb

kW — Total Power Input (Includes Compressor Motor Power Input Outdoor–Fan Motor Input, and Indoor–Fan Motor Input)

rh — Relative Humidity

NOTES:

Integrated capacity is maximum (instantaneous) capacity less the effect of frost on the outdoor coil and the heat required to defrost it.

PERFORMANCE DATA-STANDARD ECM INDOOR MOTOR

Heating Capacity

50XT042 Low

INDOOR AIR		OUTDOOR COIL ENTERING AIR TEMPERATURES deg F														
		-10 (-23.3°C)			0 (-17.7°C)			10 (-12.2°C)			17 (-8.3°C)			20 (-6.6°C)		
EDB	CFM	Capacity MBtuh		Total System KW	Capacity MBtuh		Total System KW	Capacity MBtuh		Total System KW	Capacity MBtuh		Total System KW	Capacity MBtuh		Total System KW
		Total	Integ		Total	Integ		Total	Integ		Total	Integ		Total	Integ	
60	855	5.94	5.46	1.70	8.96	8.24	1.77	12.26	11.25	1.84	14.78	13.47	1.89	15.91	14.43	1.91
	975	6.03	5.55	1.69	9.08	8.36	1.76	12.41	11.39	1.82	14.95	13.63	1.86	16.10	14.60	1.88
70	855	5.11	4.70	1.90	8.13	7.48	1.97	11.48	10.54	2.05	14.01	12.77	2.11	15.14	13.73	2.13
	975	5.22	4.80	1.90	8.27	7.61	1.97	11.65	10.69	2.03	14.20	12.95	2.08	15.35	13.92	2.10
80	855	4.12	3.79	2.11	7.14	6.57	2.18	10.55	9.68	2.27	13.09	11.94	2.33	14.24	12.91	2.36
	975	4.22	3.88	2.11	7.27	6.69	2.18	10.72	9.84	2.26	13.29	12.12	2.31	14.46	13.11	2.33

50XT042 Low Con't.

INDOOR AIR		OUTDOOR COIL ENTERING AIR TEMPERATURES deg F														
		30 (-1.1°C)			40 (4.4°C)			47 (8.3°C)			50 (10°C)			60 (15.5°C)		
EDB	CFM	Capacity MBtuh		Total System KW	Capacity MBtuh		Total System KW	Capacity MBtuh		Total System KW	Capacity MBtuh		Total System KW	Capacity MBtuh		Total System KW
		Total	Integ		Total	Integ		Total	Integ		Total	Integ		Total	Integ	
60	855	19.99	17.51	1.99	24.57	24.57	2.07	28.27	28.27	2.15	30.02	30.02	2.18	36.61	36.61	2.32
	975	20.23	17.72	1.95	24.89	24.89	2.02	28.72	28.72	2.08	30.53	30.53	2.11	37.32	37.32	2.23
70	855	19.18	16.81	2.21	23.66	23.66	2.31	27.19	27.19	2.38	28.83	28.83	2.42	35.19	35.19	2.56
	975	19.44	17.03	2.17	23.98	23.98	2.25	27.60	27.60	2.31	29.31	29.31	2.34	35.86	35.86	2.47
80	855	18.27	16.01	2.46	22.72	22.72	2.56	26.12	26.12	2.64	27.72	27.72	2.68	33.63	33.63	2.83
	975	18.54	16.24	2.41	23.04	23.04	2.50	26.53	26.53	2.57	28.17	28.17	2.60	34.44	34.44	2.73

LEGEND

Cap. — Heating Capacity (1000 Btuh) (Includes Indoor–Fan Motor Heat)
db — Dry Bulb
kW — Total Power Input (Includes Compressor Motor Power Input Outdoor–Fan Motor Input, and Indoor–Fan Motor Input)
rh — Relative Humidity

NOTES:

Integrated capacity is maximum (instantaneous) capacity less the effect of frost on the outdoor coil and the heat required to defrost it.

PERFORMANCE DATA-STANDARD ECM INDOOR MOTOR

Cooling Extended Performance Table

50XT048 High Cool

EVAPORATOR AIR		CONDENSER ENTERING AIR TEMPERATURES deg F																	
		75 (23.8°C)			85 (29.4°C)			95 (35°C)			105 (40.5°C)			115 (46.1°C)			125 (51.6°C)		
CFM	EWB	Capacity MBtuh		Total System KW	Capacity MBtuh		Total System KW	Capacity MBtuh		Total System KW	Capacity MBtuh		Total System KW	Capacity MBtuh		Total System KW	Capacity MBtuh		Total System KW
		Total	Sens		Total	Sens		Total	Sens		Total	Sens		Total	Sens		Total	Sens	
1400	57	44.39	44.39	3.40	42.70	42.70	3.71	40.87	40.87	4.05	38.88	38.88	4.43	36.67	36.67	4.84	34.16	34.16	5.30
	62	45.43	38.20	3.41	43.33	37.29	3.72	41.11	36.31	4.05	38.87	38.87	4.43	36.67	36.67	4.84	35.30	35.30	4.84
	63	46.29	30.85	3.42	44.11	29.95	3.73	41.79	29.00	4.06	39.28	28.00	4.43	36.54	26.91	4.84	33.51	25.73	5.29
	67	50.04	32.01	3.46	47.71	31.11	3.77	45.21	30.16	4.11	42.50	29.14	4.48	41.00	28.60	4.43	36.24	26.85	5.34
	72	55.24	25.88	3.53	52.68	24.98	3.84	49.93	24.04	4.18	46.96	23.04	4.55	45.43	22.53	4.52	40.04	20.75	5.41
1600	57	46.32	46.32	3.48	44.10	44.10	3.79	42.54	42.54	4.13	40.41	40.41	4.51	38.04	38.04	4.92	36.62	36.62	4.93
	62	46.57	41.09	3.48	44.43	44.43	3.79	42.54	42.54	4.13	41.40	41.40	4.51	38.04	38.04	4.92	36.61	36.61	4.93
	63	47.25	32.81	3.49	44.97	31.89	3.80	42.55	30.92	4.13	39.95	29.90	4.50	37.11	28.80	4.91	33.97	27.59	5.36
	67	51.07	34.10	3.53	48.62	33.18	3.84	46.00	32.20	4.18	43.19	31.17	4.55	40.12	30.06	4.96	38.36	29.43	4.97
	72	56.36	27.17	3.60	53.67	26.25	3.91	50.80	25.29	4.25	47.69	24.26	4.62	44.30	23.15	5.03	42.55	22.59	5.06

50XT048 Low Cool

EVAPORATOR AIR		CONDENSER ENTERING AIR TEMPERATURES deg F																	
		75 (23.8°C)			85 (29.4°C)			95 (35°C)			105 (40.5°C)			115 (46.1°C)			125 (51.6°C)		
CFM	EWB	Capacity MBtuh		Total System KW	Capacity MBtuh		Total System KW	Capacity MBtuh		Total System KW	Capacity MBtuh		Total System KW	Capacity MBtuh		Total System KW	Capacity MBtuh		Total System KW
		Total	Sens		Total	Sens		Total	Sens		Total	Sens		Total	Sens		Total	Sens	
965	57	31.49	31.49	2.22	30.30	30.30	2.49	29.02	29.02	2.78	27.63	27.63	3.12	26.10	26.10	3.51	24.40	24.40	3.96
	62	32.49	27.41	2.21	30.96	26.74	2.48	29.34	26.03	2.78	27.64	27.57	3.12	26.10	26.10	3.51	24.40	24.40	3.97
	63	33.19	22.28	2.21	31.62	21.62	2.48	29.95	20.92	2.78	28.14	20.18	3.12	26.19	19.39	3.52	24.04	18.53	3.97
	67	36.14	23.21	2.21	34.45	22.54	2.47	32.65	21.84	2.77	30.72	21.10	3.10	28.62	20.30	3.49	26.31	19.44	3.94
	72	40.19	19.02	2.21	38.34	18.36	2.46	36.37	17.67	2.75	34.25	16.93	3.08	31.95	16.14	3.46	29.40	15.29	3.90
1100	57	33.04	33.04	2.24	31.76	31.76	2.50	30.39	30.39	2.80	28.90	28.90	3.13	27.27	27.27	3.52	25.45	25.45	3.97
	62	33.42	29.57	2.23	31.85	28.86	2.50	30.39	30.39	2.80	28.90	28.90	3.13	27.27	27.27	3.52	25.45	25.45	3.97
	63	34.05	23.76	2.23	32.40	23.08	2.50	30.64	22.37	2.80	28.77	21.61	3.14	26.73	20.81	3.53	24.50	19.92	3.99
	67	37.06	24.78	2.23	35.29	24.10	2.49	33.40	23.38	2.78	31.39	22.62	3.12	29.20	21.81	3.51	26.79	20.93	3.95
	72	41.21	20.03	2.23	39.26	19.35	2.48	37.19	18.64	2.77	34.96	17.88	3.10	32.54	17.07	3.48	29.89	16.19	3.92

See page 29 for cooling notes.

PERFORMANCE DATA-STANDARD ECM INDOOR MOTOR

Heating Capacity

50XT048 High

INDOOR AIR		OUTDOOR COIL ENTERING AIR TEMPERATURES deg F														
		-10 (-23.3°C)			0 (-17.7°C)			10 (-12.2°C)			17 (-8.3°C)			20 (-6.6°C)		
EDB	CFM	Capacity MBtuh		Total System KW	Capacity MBtuh		Total System KW	Capacity MBtuh		Total System KW	Capacity MBtuh		Total System KW	Capacity MBtuh		Total System KW
		Total	Integ		Total	Integ		Total	Integ		Total	Integ		Total	Integ	
60	1400	13.33	12.27	2.19	17.37	15.98	2.40	21.89	20.10	2.63	25.47	23.23	2.80	27.14	24.61	2.88
	1600	13.53	12.45	2.21	17.59	16.18	2.42	22.14	20.32	2.64	25.78	23.51	2.80	27.47	24.92	2.88
70	1400	12.72	11.71	2.39	16.74	15.40	2.62	21.24	19.50	2.87	24.70	22.52	3.05	26.27	23.83	3.13
	1600	12.94	11.91	2.41	16.98	15.62	2.64	21.52	19.75	2.88	25.00	22.79	3.05	26.61	24.14	3.13
80	1400	11.86	10.91	2.58	15.90	14.63	2.84	20.40	18.73	3.11	23.85	21.74	3.31	25.40	23.04	3.40
	1600	12.09	11.12	2.61	16.17	14.88	2.86	20.70	19.00	3.12	24.18	22.05	3.31	25.75	23.36	3.40

50XT048 High Con't.

INDOOR AIR		OUTDOOR COIL ENTERING AIR TEMPERATURES deg F														
		30 (-1.1°C)			40 (4.4°C)			47 (8.3°C)			50 (10°C)			60 (15.5°C)		
EDB	CFM	Capacity MBtuh		Total System KW	Capacity MBtuh		Total System KW	Capacity MBtuh		Total System KW	Capacity MBtuh		Total System KW	Capacity MBtuh		Total System KW
		Total	Integ		Total	Integ		Total	Integ		Total	Integ		Total	Integ	
60	1400	33.39	29.26	3.16	40.69	40.69	3.49	46.59	46.59	3.77	49.36	49.36	3.91	58.12	58.12	4.29
	1600	33.83	29.64	3.15	41.16	41.16	3.48	46.62	46.62	3.72	49.42	49.42	3.83	58.16	58.16	4.22
70	1400	32.29	28.29	3.43	39.25	39.25	3.77	44.95	44.95	4.05	47.65	47.65	4.19	57.17	57.17	4.65
	1600	32.73	28.68	3.41	39.82	39.82	3.74	45.50	45.50	4.04	48.12	48.12	4.17	57.23	57.23	4.57
80	1400	31.08	27.23	3.71	37.81	37.81	4.07	43.28	43.28	4.37	45.87	45.87	4.51	55.65	55.65	5.07
	1600	31.53	27.62	3.69	38.39	38.39	4.04	43.94	43.94	4.33	46.54	46.54	4.48	55.70	55.70	4.92

LEGEND

Cap.— Heating Capacity (1000 Btuh) (Includes Indoor–Fan Motor Heat)

db — Dry Bulb

kW — Total Power Input (Includes Compressor Motor Power Input Outdoor–Fan Motor Input, and Indoor–Fan Motor Input)

rh — Relative Humidity

NOTES:

Integrated capacity is maximum (instantaneous) capacity less the effect of frost on the outdoor coil and the heat required to defrost it.

PERFORMANCE DATA-STANDARD ECM INDOOR MOTOR

Heating Capacity

50XT048 Low

INDOOR AIR		OUTDOOR COIL ENTERING AIR TEMPERATURES deg F														
		-10 (-23.3°C)			0 (-17.7°C)			10 (-12.2°C)			17 (-8.3°C)			20 (-6.6°C)		
EDB	CFM	Capacity MBtuh		Total System KW	Capacity MBtuh		Total System KW	Capacity MBtuh		Total System KW	Capacity MBtuh		Total System KW	Capacity MBtuh		Total System KW
		Total	Integ		Total	Integ		Total	Integ		Total	Integ		Total	Integ	
60	965	5.86	5.39	1.86	9.04	8.32	1.96	12.71	11.67	2.05	15.64	14.26	2.12	17.00	15.42	2.15
	1100	5.95	5.47	1.86	9.16	8.42	1.95	12.85	11.79	2.03	15.80	14.41	2.09	17.18	15.58	2.12
70	965	5.21	4.80	2.08	8.43	7.76	2.19	12.11	11.12	2.30	15.01	13.69	2.37	16.35	14.83	2.41
	1100	5.32	4.89	2.08	8.56	7.88	2.18	12.27	11.27	2.28	15.20	13.86	2.34	16.55	15.01	2.37
80	965	4.44	4.09	2.32	7.66	7.05	2.43	11.36	10.42	2.55	14.25	12.99	2.64	15.58	14.13	2.68
	1100	4.55	4.18	2.33	7.79	7.17	2.43	11.53	10.58	2.54	14.45	13.17	2.61	15.80	14.33	2.64

50XT048 Low Con't.

INDOOR AIR		OUTDOOR COIL ENTERING AIR TEMPERATURES deg F														
		30 (-1.1°C)			40 (4.4°C)			47 (8.3°C)			50 (10°C)			60 (15.5°C)		
EDB	CFM	Capacity MBtuh		Total System KW	Capacity MBtuh		Total System KW	Capacity MBtuh		Total System KW	Capacity MBtuh		Total System KW	Capacity MBtuh		Total System KW
		Total	Integ		Total	Integ		Total	Integ		Total	Integ		Total	Integ	
60	965	21.99	19.27	2.26	27.98	27.98	2.40	32.83	32.83	2.51	35.07	35.07	2.56	43.68	43.68	2.76
	1100	22.24	19.48	2.22	28.40	28.40	2.33	33.33	33.33	2.43	35.65	35.65	2.47	44.63	44.63	2.66
70	965	21.27	18.64	2.53	26.97	26.97	2.66	31.72	31.72	2.78	33.87	33.87	2.84	41.97	41.97	3.05
	1100	21.53	18.87	2.48	27.36	27.36	2.59	32.20	32.20	2.70	34.41	34.41	2.74	42.84	42.84	2.93
80	965	20.45	17.92	2.81	26.04	26.04	2.96	30.48	30.48	3.08	32.72	32.72	3.15	40.41	40.41	3.37
	1100	20.73	18.16	2.76	26.39	26.39	2.89	30.97	30.97	2.99	33.22	33.22	3.04	41.15	41.15	3.24

LEGEND

Cap. — Heating Capacity (1000 Btuh) (Includes Indoor–Fan Motor Heat)
db — Dry Bulb
kW — Total Power Input (Includes Compressor Motor Power Input Outdoor–Fan Motor Input, and Indoor–Fan Motor Input)
rh — Relative Humidity

NOTES:

Integrated capacity is maximum (instantaneous) capacity less the effect of frost on the outdoor coil and the heat required to defrost it.

PERFORMANCE DATA-STANDARD ECM INDOOR MOTOR

Cooling Extended Performance Table

50XT060 High Cool

EVAPORATOR AIR		CONDENSER ENTERING AIR TEMPERATURES deg F																	
		75 (23.8°C)			85 (29.4°C)			95 (35°C)			105 (40.5°C)			115 (46.1°C)			125 (51.6°C)		
CFM	EWB	Capacity MBtuh		Total System KW	Capacity MBtuh		Total System KW	Capacity MBtuh		Total System KW	Capacity MBtuh		Total System KW	Capacity MBtuh		Total System KW	Capacity MBtuh		Total System KW
		Total	Sens		Total	Sens		Total	Sens		Total	Sens		Total	Sens		Total	Sens	
2000	57	58.24	58.24	4.41	55.10	55.10	4.84	54.80	54.80	4.69	52.40	52.40	5.23	46.70	46.70	6.40	42.90	42.90	7.02
	62	58.46	54.46	4.42	55.79	55.79	4.84	55.36	55.36	4.69	52.73	52.73	5.23	46.94	46.94	6.40	43.20	43.20	7.02
	63	59.23	43.33	4.42	56.27	42.07	4.85	55.68	41.83	4.69	52.48	40.49	5.22	45.80	37.74	6.37	41.56	36.02	6.97
	67	63.56	44.86	4.50	60.35	43.59	4.92	56.88	42.24	5.38	56.62	42.14	5.33	48.97	39.21	6.44	44.37	37.49	7.05
	72	69.55	35.33	4.59	66.01	34.07	5.02	62.20	32.73	5.48	58.07	31.30	5.99	53.51	29.74	6.54	48.46	28.03	7.15
1750	57	56.01	56.01	4.29	53.76	53.76	4.72	51.30	51.30	5.19	50.80	50.80	5.08	45.20	45.20	6.27	41.70	41.70	6.89
	62	57.19	50.62	4.31	54.45	49.37	4.73	51.51	48.01	5.19	50.93	47.74	5.08	45.50	45.50	6.27	41.99	41.99	6.89
	63	58.18	40.75	4.32	55.35	39.51	4.74	52.28	38.20	5.20	51.66	37.95	5.10	45.27	35.27	6.26	41.16	33.59	6.87
	67	62.48	42.11	4.39	59.41	40.86	4.81	57.00	39.90	5.18	55.71	39.39	5.21	48.47	36.58	6.34	44.00	34.88	6.94
	72	68.41	33.69	4.48	65.01	32.46	4.91	61.35	31.14	5.37	57.37	29.72	5.88	52.97	28.19	6.44	48.09	26.53	7.04

50XT060 Low Cool

EVAPORATOR AIR		CONDENSER ENTERING AIR TEMPERATURES deg F																	
		75 (23.8°C)			85 (29.4°C)			95 (35°C)			105 (40.5°C)			115 (46.1°C)			125 (51.6°C)		
CFM	EWB	Capacity MBtuh		Total System KW	Capacity MBtuh		Total System KW	Capacity MBtuh		Total System KW	Capacity MBtuh		Total System KW	Capacity MBtuh		Total System KW	Capacity MBtuh		Total System KW
		Total	Sens		Total	Sens		Total	Sens		Total	Sens		Total	Sens		Total	Sens	
1200	57	39.88	39.88	2.70	38.34	38.34	3.04	36.64	36.64	3.43	34.74	34.74	3.87	31.90	31.90	4.37	29.70	29.70	4.94
	62	40.94	35.96	2.69	39.01	35.09	3.04	36.90	34.14	3.43	34.90	34.90	3.87	32.60	32.60	4.37	30.16	30.16	4.94
	63	41.76	29.14	2.69	39.78	28.27	3.04	37.61	27.34	3.42	35.23	26.33	3.87	32.61	25.22	4.37	29.69	24.04	4.96
	67	45.04	30.17	2.68	42.87	29.29	3.02	40.50	28.35	3.40	37.91	27.31	3.84	35.04	26.21	4.33	31.84	25.00	4.90
	72	49.59	24.40	2.68	47.18	23.52	3.01	44.52	22.56	3.38	41.68	21.55	3.80	38.47	20.43	4.28	34.93	19.21	4.84
1370	57	41.69	41.69	2.72	40.00	40.00	3.07	37.90	37.90	3.45	35.45	35.45	3.89	33.62	33.62	4.38	30.90	30.90	4.95
	62	41.98	38.83	2.72	40.02	40.02	3.07	38.18	38.18	3.45	36.13	36.13	3.89	33.82	33.82	4.38	31.19	31.19	4.95
	63	42.72	31.09	2.72	40.63	30.20	3.07	38.35	29.24	3.45	35.86	28.21	3.89	33.13	27.09	4.40	30.10	25.87	4.98
	67	46.03	32.23	2.72	43.75	31.34	3.05	41.27	30.36	3.43	38.55	29.32	3.86	35.56	28.18	4.36	32.25	26.93	4.92
	72	50.62	25.68	2.71	48.09	24.78	3.04	45.37	23.83	3.41	42.32	22.77	3.83	39.01	21.64	4.31	35.34	20.40	4.86

See page 29 for cooling notes.

PERFORMANCE DATA-STANDARD ECM INDOOR MOTOR

Heating Capacity

50XT060 High

INDOOR AIR		OUTDOOR COIL ENTERING AIR TEMPERATURES deg F (°C)														
		-10 (-23.3)			0 (-17.7)			10 (-12.2)			17 (-8.3)			20 (-6.6)		
EDB	CFM	Capacity MBtuh		Total System KW	Capacity MBtuh		Total System KW	Capacity MBtuh		Total System KW	Capacity MBtuh		Total System KW	Capacity MBtuh		Total System KW
		Total	Integ		Total	Integ		Total	Integ		Total	Integ		Total	Integ	
60	1750	17.01	15.65	3.08	21.62	19.89	3.31	27.05	24.83	3.55	31.57	28.78	3.73	33.69	30.55	3.82
	2000	17.24	15.86	3.12	21.87	20.13	3.34	27.37	25.12	3.57	31.93	29.11	3.74	34.08	30.90	3.83
70	1750	16.62	15.29	3.40	21.22	19.53	3.65	26.51	24.33	3.91	30.80	28.08	4.10	32.92	29.86	4.19
	2000	16.88	15.53	3.44	21.50	19.78	3.69	26.82	24.62	3.93	31.18	28.43	4.11	33.32	30.22	4.20
80	1750	16.04	14.75	3.72	20.64	18.99	4.01	25.93	23.80	4.29	30.06	27.41	4.49	31.99	29.01	4.59
	2000	16.31	15.01	3.77	20.95	19.27	4.04	26.26	24.11	4.31	30.42	27.74	4.50	32.41	29.39	4.59

50XT060 High Con't.

INDOOR AIR		OUTDOOR COIL ENTERING AIR TEMPERATURES deg F (°C)														
		30 (-1.1)			40 (4.4)			47 (8.3)			50 (10)			60 (15.5)		
EDB	CFM	Capacity MBtuh		Total System KW	Capacity MBtuh		Total System KW	Capacity MBtuh		Total System KW	Capacity MBtuh		Total System KW	Capacity MBtuh		Total System KW
		Total	Integ		Total	Integ		Total	Integ		Total	Integ		Total	Integ	
60	1750	41.80	36.62	4.14	50.24	50.24	4.44	56.80	56.80	4.63	59.20	59.20	4.67	64.80	64.80	4.75
	2000	41.90	36.71	4.12	50.80	50.80	4.36	56.90	56.90	4.40	59.50	59.50	4.42	65.10	65.10	4.50
70	1750	40.71	35.67	4.52	49.81	49.81	4.91	56.00	56.00	5.13	58.75	58.75	5.26	63.56	63.56	5.44
	2000	41.19	36.09	4.53	50.10	50.10	4.84	56.40	56.40	4.99	59.10	59.10	5.02	64.30	64.30	5.11
80	1750	39.61	34.70	4.93	48.50	48.50	5.35	55.46	55.46	5.63	58.45	58.45	5.74	62.90	62.90	6.23
	2000	40.12	35.15	4.92	48.79	48.79	5.29	55.90	55.90	5.56	58.90	58.90	5.66	63.50	63.50	5.78

LEGEND

Cap.— Heating Capacity (1000 Btuh) (Includes Indoor–Fan Motor Heat)

db — Dry Bulb

kW — Total Power Input (Includes Compressor Motor Power Input Outdoor–Fan Motor Input, and Indoor–Fan Motor Input)

rh — Relative Humidity

NOTES:

Integrated capacity is maximum (instantaneous) capacity less the effect of frost on the outdoor coil and the heat required to defrost it.

PERFORMANCE DATA-STANDARD ECM INDOOR MOTOR

Heating Capacity

50XT060 Low

INDOOR AIR		OUTDOOR COIL ENTERING AIR TEMPERATURES deg F (°C)														
		-10 (-23.3)			0 (-17.7)			10 (-12.2)			17 (-8.3)			20 (-6.6)		
EDB	CFM	Capacity MBtuh		Total System KW	Capacity MBtuh		Total System KW	Capacity MBtuh		Total System KW	Capacity MBtuh		Total System KW	Capacity MBtuh		Total System KW
		Total	Integ		Total	Integ		Total	Integ		Total	Integ		Total	Integ	
60	1200	9.91	9.11	2.55	13.43	12.36	2.64	17.58	16.14	2.72	20.92	19.07	2.78	22.45	20.36	2.81
	1370	10.02	9.22	2.55	13.56	12.48	2.62	17.73	16.28	2.69	21.10	19.23	2.74	22.64	20.54	2.76
70	1200	9.46	8.70	2.89	12.98	11.94	2.99	17.10	15.69	3.08	20.40	18.60	3.15	21.92	19.88	3.18
	1370	9.59	8.82	2.89	13.13	12.08	2.97	17.29	15.87	3.05	20.61	18.79	3.10	22.14	20.08	3.13
80	1200	8.82	8.11	3.25	12.35	11.36	3.36	16.47	15.12	3.46	19.75	18.01	3.54	21.27	19.29	3.57
	1370	8.96	8.24	3.25	12.52	11.52	3.34	16.67	15.30	3.43	19.98	18.22	3.49	21.51	19.51	3.52

50XT060 Low Con't.

INDOOR AIR		OUTDOOR COIL ENTERING AIR TEMPERATURES deg F (°C)														
		30 (-1.1)			40 (4.4)			47 (8.3)			50 (10)			60 (15.5)		
EDB	CFM	Capacity MBtuh		Total System KW	Capacity MBtuh		Total System KW	Capacity MBtuh		Total System KW	Capacity MBtuh		Total System KW	Capacity MBtuh		Total System KW
		Total	Integ		Total	Integ		Total	Integ		Total	Integ		Total	Integ	
60	1200	28.14	24.66	2.91	35.04	35.04	3.03	40.62	40.62	3.13	43.31	43.31	3.18	53.58	53.58	3.38
	1370	28.41	24.90	2.84	35.43	35.43	2.94	41.18	41.18	3.03	43.95	43.95	3.07	54.06	54.06	3.19
70	1200	27.54	24.13	3.28	34.06	34.06	3.40	39.50	39.50	3.51	42.04	42.04	3.56	51.83	51.83	3.77
	1370	27.81	24.37	3.21	34.46	34.46	3.31	40.01	40.01	3.40	42.63	42.63	3.44	52.74	52.74	3.62
80	1200	26.82	23.50	3.69	33.24	33.24	3.82	38.34	38.34	3.92	40.91	40.91	3.99	50.19	50.19	4.21
	1370	27.11	23.76	3.61	33.60	33.60	3.71	38.85	38.85	3.80	41.41	41.41	3.85	51.04	51.04	4.04

LEGEND

Cap. — Heating Capacity (1000 Btuh) (Includes Indoor–Fan Motor Heat)
db — Dry Bulb
kW — Total Power Input (Includes Compressor Motor Power Input Outdoor–Fan Motor Input, and Indoor–Fan Motor Input)
rh — Relative Humidity

NOTES:

Integrated capacity is maximum (instantaneous) capacity less the effect of frost on the outdoor coil and the heat required to defrost it.

PERFORMANCE DATA (CONT)

Multiplication Factors

Heater kW Rating	Voltage Distribution V/3/60	Multiplication Factor
240	200	.69
	208	.75
	230	.92
	240	1.00

Example: 15.0 kW (at 240v) heater on 208v
= 15.0 (.75 mult factor)
= 11.25 capacity at 208v

LEGEND
BF— Bypass Factor
edb— Entering Dry–Bulb
Ewb— Entering Wet–Bulb
kW — Total Unit Power Input
ldb— Leaving Dry–Bulb
lwb— Leaving Wet–Bulb
SHC— Sensible Heat Capacity (1000 Btuh)
TC — Total Capacity (1000 Btuh) (net)

*At 75°F (23.8°C) entering dry bulb (Tennessee Valley Authority [TVA] rating conditions); all other at 80°F (26.6°C) entering dry bulb.

COOLING NOTES:
1. Ratings are net; they account for the effects of the evaporator fan motor power and heat.
2. Direct interpolation is permissible. Do not extrapolate.
3. The following formulas may be used:

$$t_{ldb} = t_{edb} - \frac{\text{Sensible capacity (Btuh)}}{1.10 \times \text{cfm}}$$

t_{lwb} = Wet-bulb temperature corresponding to enthalpy air leaving evaporator coil (h_{lwb})

$$h_{lwb} = h_{ewb} - \frac{\text{total capacity (Btuh)}}{4.5 \times \text{cfm}}$$

Where: h_{ewb} = Enthalpy of air entering evaporator coil

4. The SHC is based on 80° F (26.6°C) edb temperature of air entering evaporator coil. Below 80° F (26.6°C) edb, subtract (corr factor x cfm) from SHC.

Above 80° F (26.6°C) edb, add (corr factor x cfm) to SHC.
Correction Factor = 1.10 x (1 + BF) x (edb + 80).

5. Integrated capacity is maximum (instantaneous) capacity less the effect of frost on the outdoor coil and the heat required to defrost it.

50XT

WET COIL AIR DELIVERY - LOW STAGE

208/230 VOLT											
UNIT SIZE	SYSTEM SETTING	EXTERNAL STATIC PRESSURE (in. wc)									
		0.1	0.2	0.3	0.4	0.5	0.6	0.7	0.8	0.9	1.0
024	COMFORT (Default)	Variable based on Comfort Settings									
	EFFICIENCY	525	525	525	525	525	525	525	525	525	525
	MAX	600	600	600	600	600	600	600	600	600	600
030	COMFORT (Default)	Variable based on Comfort Settings									
	EFFICIENCY	613	613	613	613	613	613	613	613	613	613
	MAX	700	700	700	700	700	700	700	700	700	700
036	COMFORT (Default)	Variable based on Comfort Settings									
	EFFICIENCY	743	743	743	743	743	743	743	743	743	743
	MAX	850	850	850	850	850	850	850	850	850	850
042	COMFORT (Default)	Variable based on Comfort Settings									
	EFFICIENCY	853	853	853	853	853	853	853	853	853	853
	MAX	975	975	975	975	975	975	975	975	975	975
048	COMFORT (Default)	Variable based on Comfort Settings									
	EFFICIENCY	963	963	963	963	963	963	963	963	963	963
	MAX	1100	1100	1100	1100	1100	1100	1100	1100	1100	1100
060	COMFORT (Default)	Variable based on Comfort Settings									
	EFFICIENCY	1200	1200	1200	1200	1200	1200	1200	1200	1200	1200
	MAX	1372	1372	1372	1372	1372	1372	1372	1372	1372	1372

WET COIL AIR DELIVERY - HIGH STAGE

208/230 VOLT											
UNIT SIZE	SYSTEM SETTING	EXTERNAL STATIC PRESSURE (in. wc)									
		0.1	0.2	0.3	0.4	0.5	0.6	0.7	0.8	0.9	1.0
024	COMFORT (Default)	Variable based on Comfort Settings									
	EFFICIENCY	700	700	700	700	700	700	700	700	700	700
	MAX	800	800	800	800	800	800	800	800	800	800
030	COMFORT (Default)	Variable based on Comfort Settings									
	EFFICIENCY	875	875	875	875	875	875	875	875	875	875
	MAX	1000	1000	1000	1000	1000	1000	1000	1000	1000	1000
036	COMFORT (Default)	Variable based on Comfort Settings									
	EFFICIENCY	1050	1050	1050	1050	1050	1050	1050	1050	1050	1050
	MAX	1200	1200	1200	1200	1200	1200	1200	1200	1200	1200
042	COMFORT (Default)	Variable based on Comfort Settings									
	EFFICIENCY	1225	1225	1225	1225	1225	1225	1225	1225	1225	1225
	MAX	1400	1400	1400	1400	1400	1400	1400	1400	1400	1400
048	COMFORT (Default)	Variable based on Comfort Settings									
	EFFICIENCY	1400	1400	1400	1400	1400	1400	1400	1400	1400	1400
	MAX	1600	1600	1600	1600	1600	1600	1600	1600	1600	1600
060	COMFORT (Default)	Variable based on Comfort Settings									
	EFFICIENCY	1750	1750	1750	1750	1750	1750	1750	1750	1750	1750
	MAX	2000	2000	2000	2000	2000	2000	2000	2000	2000	2000

Air delivery values are based on operating voltage of 230v, and wet coil. Filter and electric heater will not change air delivery values.

NOTES:
1. See User Interface instructions for more information on Max, Efficiency, and Comfort Settings
2. Efficiency Setting operates at 350 cfm/ton (nominal) and Max Setting operates at 400 cfm/ton (nominal)

TYPICAL PIPING AND WIRING

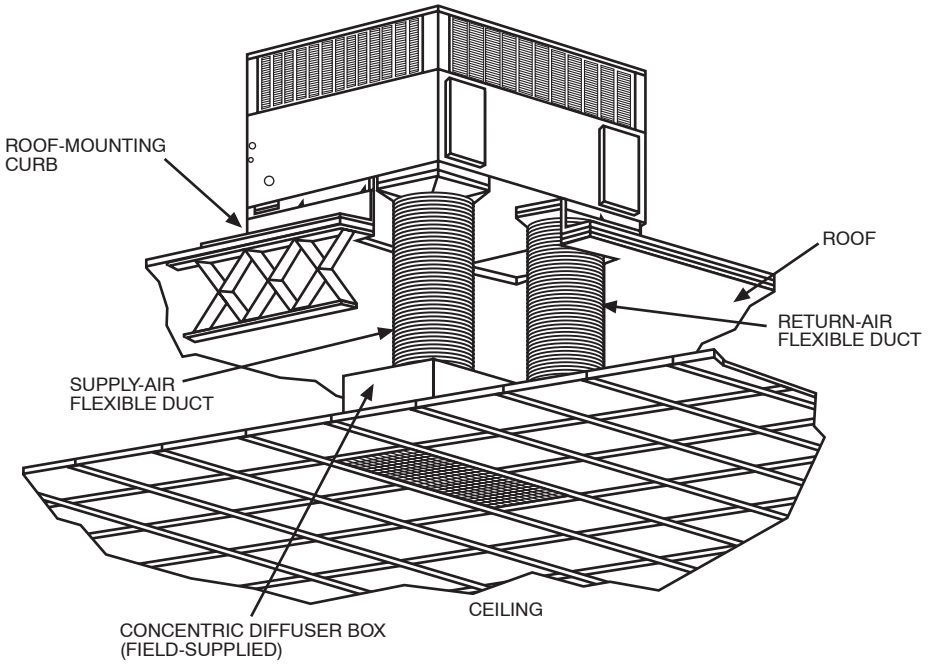

C00023

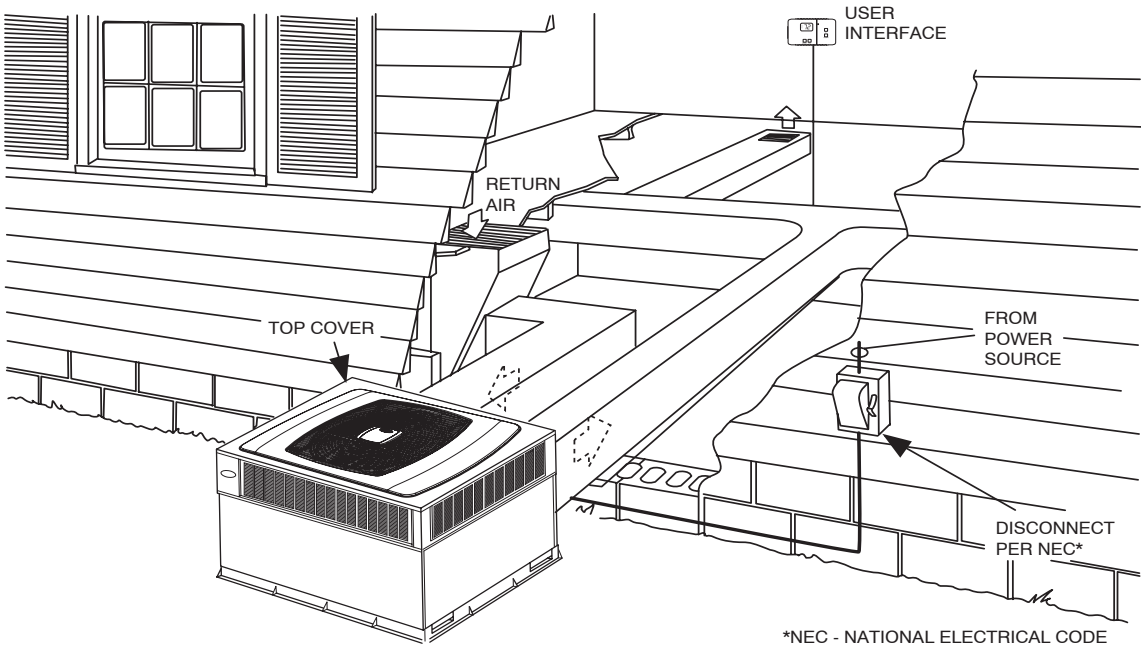

A06279

APPLICATION DATA

Condensate trap — A 2-in. condensate trap must be field supplied.

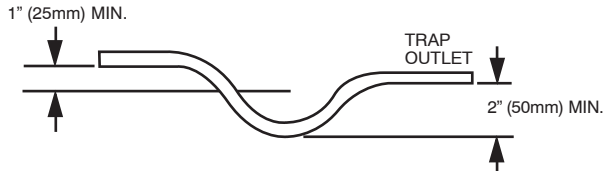

Ductwork — Secure downflow discharge ductwork to roof curb. For horizontal discharge applications, attach ductwork to unit with flanges.

To convert a unit to downflow discharge — Units are equipped with factory-installed inserts in the downflow openings. Remove the inserts similar to removing an electrical knock-out. Leave on duct covers to seal the horizontal discharge openings in the unit. Units installed in horizontal discharge orientation do not require duct covers.

Minimum cooling ambient operating temperature — All standard units have a minimum ambient operating temperature of 55°F (12.7°C). With low-ambient cooling enabled at the UI, units can operate at temperatures down to 0°F (-17.7°C).

Maximum operating outdoor air temperature — Maximum outdoor operating air temperature for cooling is 125°F (51.6°C).

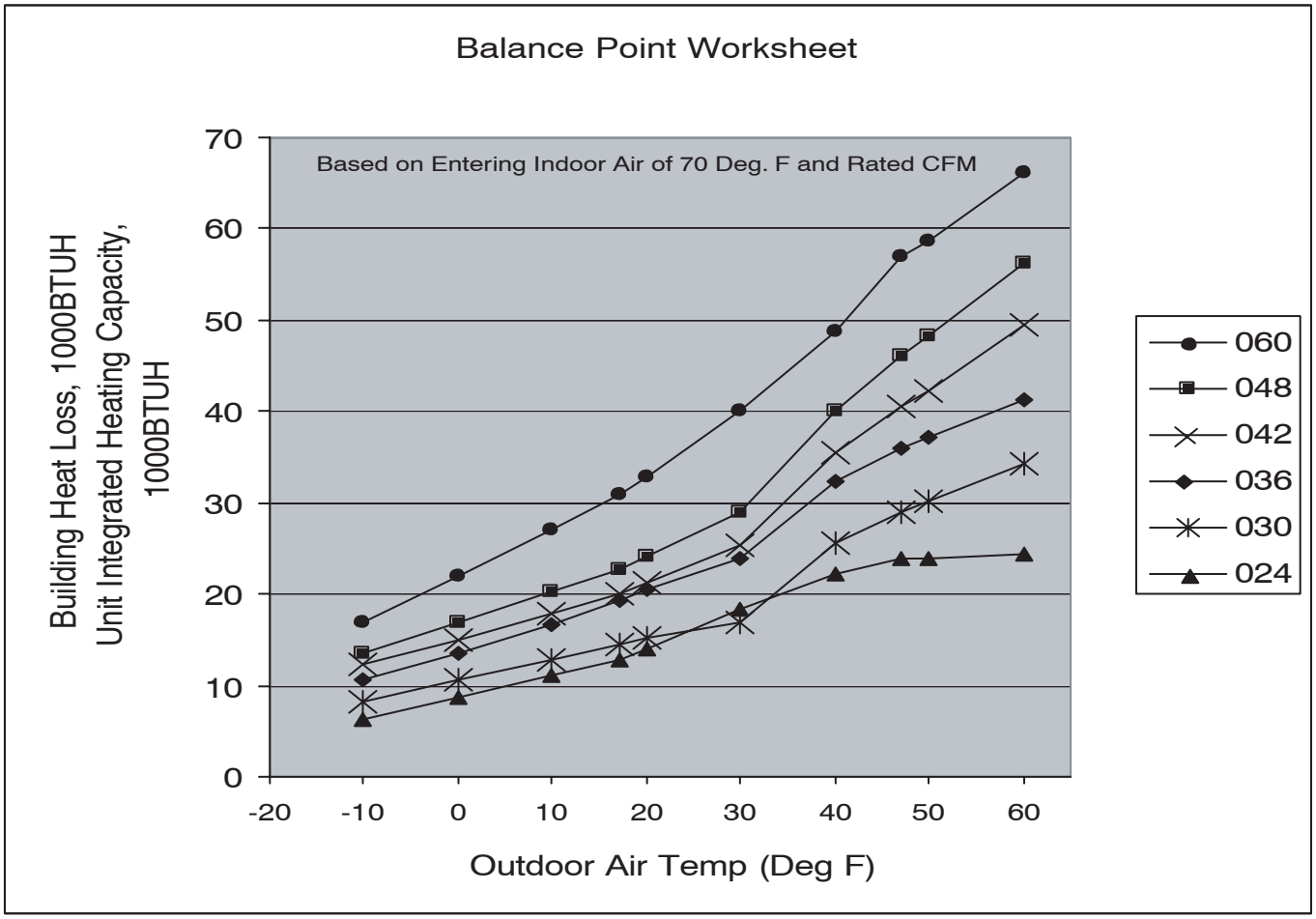

C03008

ELECTRICAL DATA

UNIT SIZE	V-PH-HZ	VOLTAGE RANGE		COMPRESSOR		OFM FLA	IFM FLA	ELECTRIC HEAT		SINGLE POINT POWER SUPPLY	
		MIN	MAX	RLA	LRA			NOMINAL kW*	FLA	MCA	MOCP
024	208/230-1-60	187	253	15.3	52.0	0.9	4.3	-/-	-/-	24.3/24.3	35/35
								3.8/5.0	18.1/20.8	46.9/50.3	50/60
								5.4/7.2	26.0/30.0	56.8/61.8	60/70
								7.5/10.0	36.1/41.7	69.4/76.4	70/80
030	208/230-1-60	187	253	16.8	70.0	0.9	4.3	-/-	-/-	26.2/26.2	40/40
								3.8/5.0	18.1/20.8	48.7/52.2	60/60
								5.4/7.2	26.0/30.0	58.7/63.7	60/70
								7.5/10.0	36.1/41.7	71.3/78.3	80/80
								11.3/15.0	54.2/62.5	93.9/104.3	100/110
036	208/230-1-60	187	253	16.7	82.0	0.9	6.8	-/-	-/-	28.6/28.6	45/45
								3.8/5.0	18.1/20.8	51.2/54.6	60/60
								5.4/7.2	26.0/30.0	61.1/66.1	70/70
								7.5/10.0	36.1/41.7	73.7/80.7	80/90
								11.3/15.0	54.2/62.5	96.3/106.7	100/110
042	208/230-1-60	187	253	21.8	96.0	0.9	6.8	-/-	-/-	34.9/34.9	50/50
								3.8/5.0	18.1/20.8	57.5/60.9	70/70
								5.4/7.2	26.0/30.0	67.4/72.4	80/80
								7.5/10.0	36.1/41.7	80.0/87.0	90/90
								11.3/15.0	54.2/62.5	102.6/113.0	110/125
								15.0/20.0	72.2/83.3	125.2/139.1	150/150
048	208/230-1-60	187	253	27.8	96.0	1.5	6.8	-/-	-/-	43.1/43.1	60/60
								3.8/5.0	18.1/20.8	65.7/69.1	80/90
								5.4/7.2	26.0/30.0	75.6/80.6	90/100
								7.5/10.0	36.1/41.7	88.2/95.2	100/110
								11.3/15.0	54.2/62.5	110.8/121.2	125/125
								15.0/20.0	72.2/83.3	133.4/147.3	150/150
060	208/230-1-60	187	253	27.3	118.0	1.9	9.1	-/-	-/-	45.2/45.2	60/60
								3.8/5.0	18.1/20.8	67.7/71.2	90/90
								5.4/7.2	26.0/30.0	77.6/82.7	90/100
								7.5/10.0	36.1/41.7	90.3/97.2	100/110
								11.3/15.0	54.2/62.5	112.9/123.3	125/125
								15.0/20.0	72.2/83.3	135.4/149.3	150/150

*Heater capacity (kW) based on heater voltage of 208v & 240v. If power distribution voltage to unit varies from rated heater voltage, heater kW will vary accordingly.

LEGEND

FLA — Full Load Amps
LRA — Locked Rotor Amps
MCA — Minimum Circuit Amps
MOCP — Maximum Overcurrent Protection
RLA — Rated Load Amps

NOTES:

1. In compliance with NEC (National Electrical Code) requirements for multimotor and combination load equipment (refer to NEC Articles 430 and 440), the overcurrent protective device for the unit shall be Power Supply fuse. The CGA (Canadian Gas Association) units may be fuse or circuit breaker.
2. Minimum wire size is based on 60 C copper wire. If other than 60 C wire is used, or if length exceeds wire length in table, determine size from NEC.

TYPICAL WIRING SCHEMATIC — 230-1-60

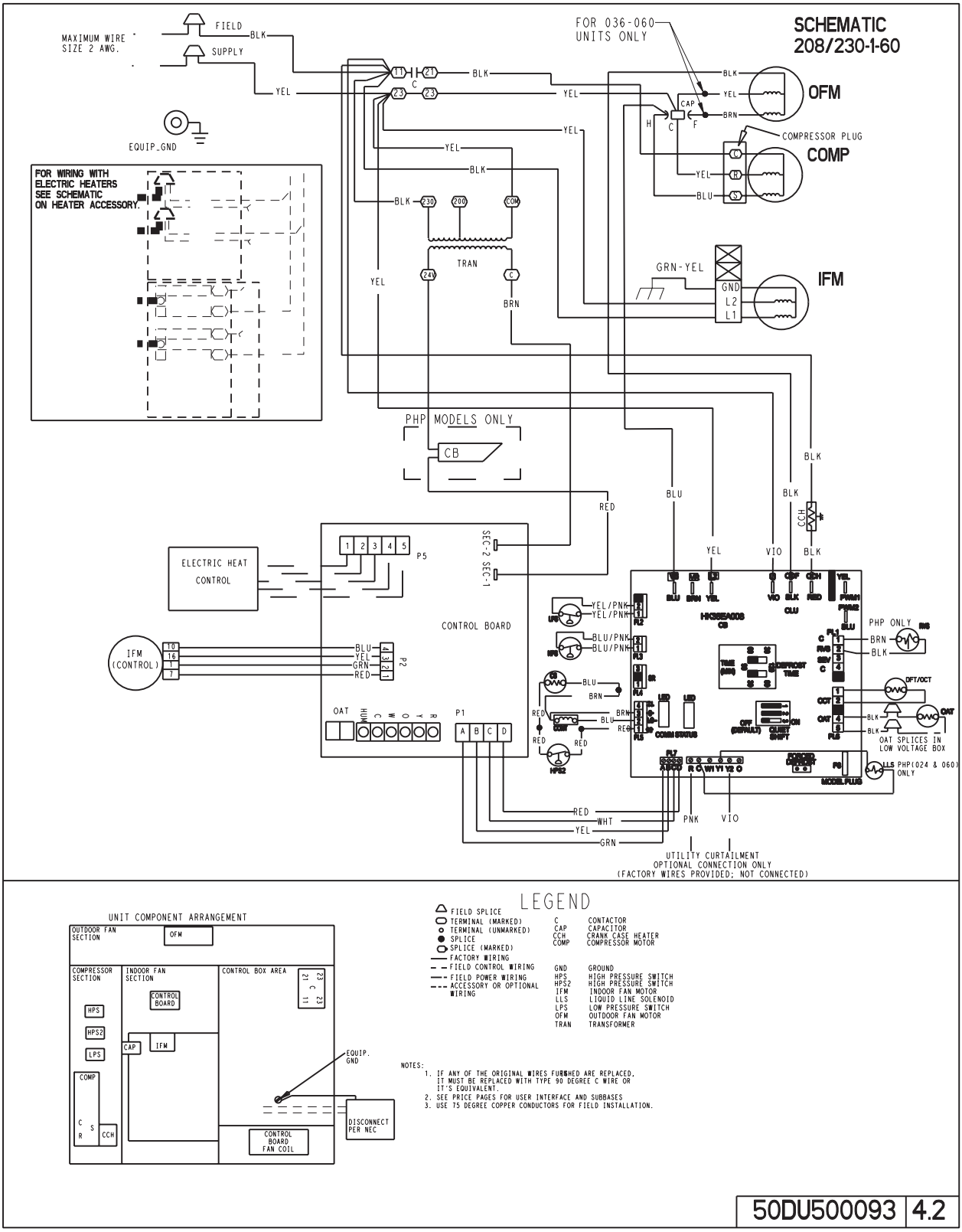

A06280

Sequence of Operation

The 50XT packaged heat pump is designed for installation with a communicating UI. This unit will not respond to commands provided by a common thermostat except under certain emergency situations.

The UI uses temperature, humidity and other data supplied from indoor and outdoor system components to control heating or cooling system for optimum comfort. The unit will be commanded by the UI to supply airflow. The unit will operate the indoor fan at requested airflow for most modes.

The nominal requested airflow in high stage will be 350 cfm per ton of nominal cooling capacity as defined by unit size. Actual airflow request will be adjusted from nominal using indoor and outdoor temperature and indoor humidity data to optimize the system operation for occupant comfort and system efficiency. Refer to UI literature for further system control details.

Airflow during electric heater operation must be greater than a minimum level for safe operation. If UI instructs unit to turn on electric heat and the requested airflow is less than the minimum level the fan coil control will override requested value.

NOTE: Once the compressor has started and then has stopped, it should not be started again until 4 minutes have elapsed. The cooling cycle remains "on" until the room temperature drops to point that is slightly below the cooling control setting of the UI.

COOLING AND HEATING OPERATION

With a call for first stage cooling, the outdoor fan, reversing valve, and low stage compressor are energized. If low-stage cannot satisfy cooling demand, high-stage cooling is energized by the UI. After second stage is satisfied, the unit returns to low-stage operation until first stage is satisfied or until second stage is required again. When both first stage and second stage cooling are satisfied, the compressor will shut off. The reversing valve will remain energized until the control board power is removed or a call for heating is initiated. With a call for heating, the outdoor fan and compressor are energized. The compressor will operate in high or low stage operation, as needed, to meet the heating demand. When the heating demand is satisfied, the compressor and fan will shut off. The reversing valve is de-energized in the heating mode.

NOTE: When two-stage unit is operating at low-stage, system vapor (suction) pressure will be higher than a standard single-stage system or high-stage operation.

NOTE: Outdoor fan motor will continue to operate for one minute after compressor shuts off, when outdoor ambient is greater than or equal to 100°F.

UTILITY INTERFACE WITH INFINITY CONTROL

The utility curtailment relay should be connected to factory supplied pigtails (PINK connected to R, VIOLET connected to Y2 on the control board) located in the low voltage splice box (see Typical Wiring Schematic). This input allows a power utility device to interrupt compressor operation during peak load periods. When the utility sends a signal to shut the system down, the UI will display "Curtailment Active".

INFINITY CONTROLLED LOW AMBIENT COOLING

NOTE: When this unit is operating below 55°F (12.7°C) outdoor temperature, provisions must be made for low ambient operation. This unit is capable of low ambient cooling down to 0°F (-17.7°C)ONLY when using the Infinity control. A low ambient kit is not required, and the outdoor fan motor does not need to be replaced for Infinity controlled low ambient operation. **Low ambient cooling must be enabled in the UI set-up.** Fan may not begin to cycle until about 40°F (4.4°C) OAT. Fan will cycle based on coil and outdoor air temperature.

GUIDE SPECIFICATIONS

SINGLE-PACKAGED HEAT PUMP UNITS
CONSTANT VOLUME APPLICATION
HVAC GUIDE SPECIFICATIONS
SIZE RANGE: 2 TO 5 TONS, NOMINAL (COOLING)
MODEL NUMBER: 50XT

PART I - GENERAL

SYSTEM DESCRIPTION

Outdoor rooftop or ground mounted heat pump unit utilizing a hermetic, 2-stage scroll compressor for heating and cooling duty and optional electric heating. Unit shall discharge supply air vertically or horizontally as shown on contract drawings. Outdoor fan/coil section shall have a draw-thru design with vertical discharge for minimum sound levels.

QUALITY ASSURANCE

A. Unit shall be rated in accordance with ARI Standards 210/240 and 270.
B. Unit shall be designed in accordance with UL Standard 1995.
C. Unit shall be manufactured in a facility registered to ISO 9001 manufacturing quality standard
D. Unit shall be UL listed and c-UL certified as a total package for safety requirements.
E. Roof curb shall be designed to conform to NRCA Standards.
F. Insulation and adhesives shall meet NFPA 90A requirements for flame spread and smoke generation.
G. Cabinet insulation shall meet ASHRAE Standard 62P.

DELIVERY, STORAGE, AND HANDLING

Unit shall be stored and handled per manufacturer's recommendations.

PART 2- PRODUCTS

EQUIPMENT

A. General:
Factory-assembled, single-piece, heat pump. Contained within the unit enclosure shall be all factory wiring, piping, controls, refrigerant charge (R-410A), and special features required prior to field start-up.

B. Unit Cabinet:
1. Unit cabinet shall be constructed of phosphated, zinc-coated, prepainted steel capable of withstanding 500 hrs of salt spray.
2. Normal service shall be through a single removable cabinet panel.
3. The unit shall be constructed on a rust proof unit base that has an externally trapped, integrated sloped drain pan.
4. Indoor fan compartment top surface shall be insulated with a minimum 1/2-in. thick, flexible fiberglass insulation, coated on the air side and retained by adhesive and mechanical means. The indoor wall sections will be insulated with a foil-faced insulation capable of being wiped clean. Aluminum foil-faced fiberglass insulation shall be used in the entire indoor air cavity section.
5. Unit shall have a field-supplied condensate trap.

C. Fans:
1. The indoor fan shall be variable-speed motor and control, as shown on equipment drawings.
2. Fan wheel shall be made from steel, be double-inlet type. It shall have forward-curved blades with a corrosion-resistant finish and shall be dynamically balanced.
3. Outdoor fan shall be of the direct-driven propeller type with aluminum blades, riveted to corrosion-resistant steel spiders. It shall be dynamically balanced, and discharge air vertically.

D. Compressor:
1. Fully hermetic, 2-stage scroll compressors with factory-installed vibration isolation.
2. Scroll compressors shall be standard on all units.
3. Compressor Protection:
Defrost control shall protect compressor by preventing "short cycling."

E. Coils:
1. Indoor and outdoor coils shall have aluminum plate fins mechanically bonded to seamless copper tubes with all joints brazed.
2. Tube sheet openings shall be bellied to prevent tube wear.

F. Refrigerant Metering Device:
Refrigerant metering device shall be of the single body, fixed orifice feed type (outdoor) and TXV (indoor).

G. Filters:
Filter section shall consist of field-installed, throw-away, 1-in. thick fiberglass filters of commercially available sizes.

H. Controls and Safeties:
1. Unit controls shall be complete with self-contained low voltage control circuit.
2. Units shall incorporate an internal compressor protector that provides reset capability.
3. Unit shall provide high- and low-/loss-of-charge pressure safety protection.

I. Operating Characteristics:
1. Unit shall be capable of starting and running at 125°F (51.6°C) ambient outdoor temperature, exceeding maximum load criteria of ARI Standard 240.
2. Compressor shall be capable of operation down to 55°F (12.7°C) ambient outdoor temperature in cooling and -10°F in heating.
3. Unit shall be capable of low-ambient cooling (below 55°F (12.7°C) ambient outdoor temperature) with low-ambient cooling enabled on the UI.

J. Electrical Requirements:
All unit power wiring shall enter unit cabinet at a single location.

K. Motors:
1. Compressor motors shall be of the refrigerant-cooled type with line-break thermal and current overload protection.
2. All fan motors shall have permanently lubricated bearings and inherent automatic-reset thermal overload protection.
3. Outdoor fan motor shall be totally enclosed.

L. Grille
1. Louvered Grille:
Louvered grille shall be standard on all units.

M. Special Features:

1. Coil Options:
   Shall include factory-installed optional tin-plated indoor copper/copper and vinyl-coated refrigerant coils.
2. Flat Roof Curb:
   Curbs shall have seal strip and a wood nailer for flashing and shall be installed per manufacturer's instructions.
3. Manual Outdoor Air Damper:
   Package shall consist of damper, bird screen, and rain hood which can be preset to admit outdoor air for year-round ventilation.
4. Infinity™ User Interface:
   To provide for two-stage heat pump heating, two-stage cooling, and electric (auxiliary) heat, in addition to manual or automatic changeover and indoor fan control.
5. Low-Ambient Cooling:
   Low-ambient cooling must be enabled in the UI setup to allow unit to operate down to 0°F (-17°C) outdoor ambient temperature in cooling.
6. Filter Rack Kit:
   Shall provide filter mounting for downflow and horizontal applications.
7. Square-To-Round Duct Transitions:
   Shall have the ability to convert the supply and return openings from rectangular to round (024-048 sizes only).
8. Crankcase Heater:
   Shall provide anti-floodback protection for low-load cooling applications. (Standard on 042-060 sizes.)
9. Electric heaters:
   a. Electric heater shall be available as a field-installed option.
   b. Heater elements shall be open-wire type, adequately supported and insulated with ceramic bushings.
   c. Electric heater packages must provide single-point power connection capability.
10. Compressor Hard Start Kit:
    Shall be available to give a boost to the compressor motor at each start-up.

Copyright 2007 Carrier Corp. • 7310 W. Morris St. • Indianapolis, IN 46231
Printed in U.S.A. Edition Date: 03/07 **Catalog No: 50XT–2PD**

Manufacturer reserves the right to change, at any time, specifications and designs without notice and without obligations.
Replaces: 50XT–1PD