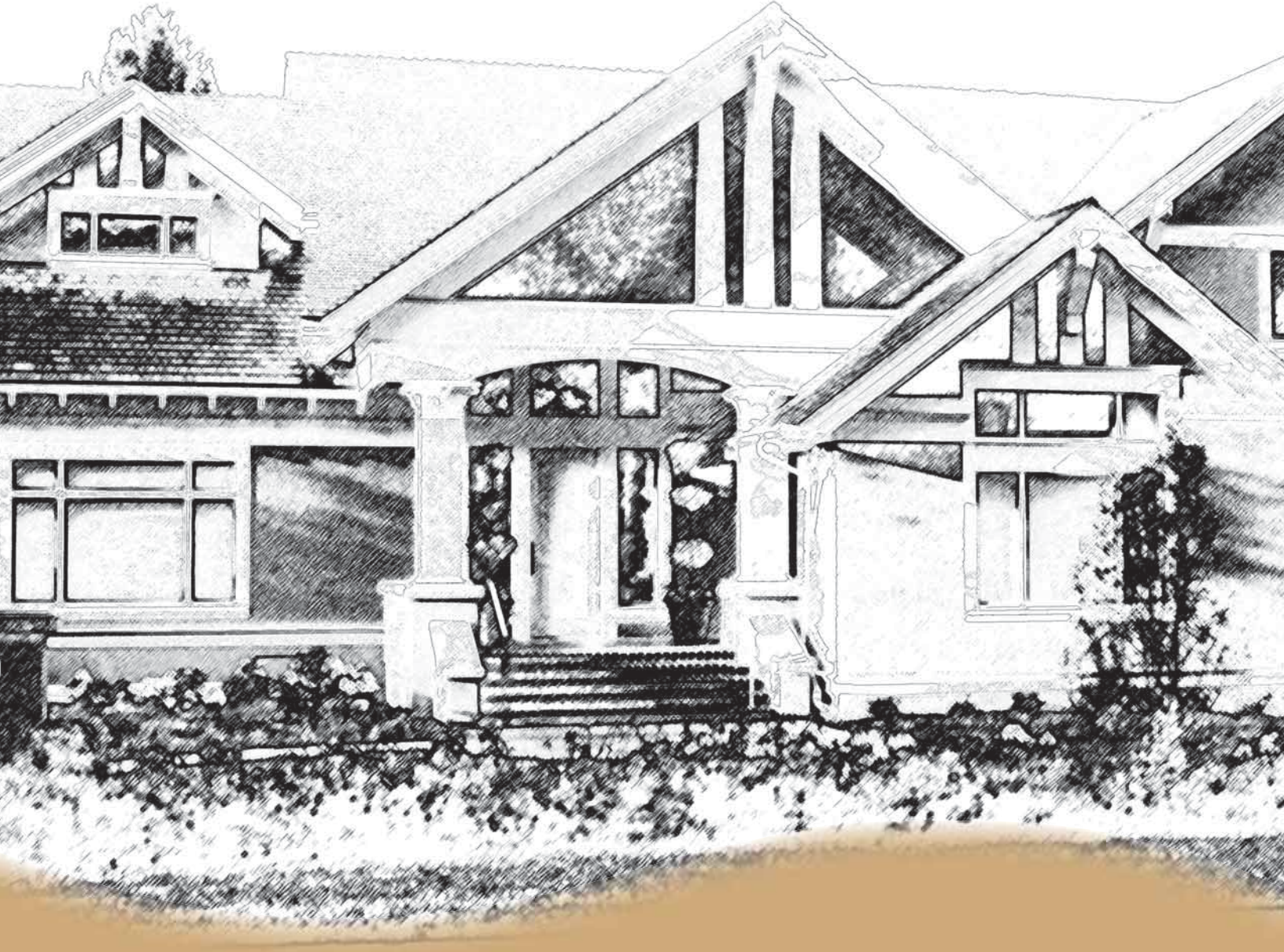

GT-PX and GT-PE Split (50YDS and 50YPS) Series

TWO-STAGE
INDOOR AND OUTDOOR SPLIT PURON® SYSTEMS
SIZES 026 - 064 [7.0 - 19.3 kW]

Table of Contents

Rounding Out the Product Line....3
GT-PX and GT-PE Split Design Features....4
Model Key, Reference Calculations & Legend....7
Unit Model Key....7
About AHRI/ISO/ASHRAE 13256-1....8
AHRI/ISO/ASHRAE/ANSI 13256-1 Performance....9
Performance Correction Factors....10
Performance Data Selection Notes....12
Performance Data....13
Physical Data & Electrical Data....21
Dimensional Data....22
Standard Electrical Wiring Diagram....24
Equipment Selection....26
Engineering Guide Specifications....28
Accessories & Options....29
Warranty Information....29
Revision History....30

Rounding Out the Product Line

Building upon the overwhelming market success of the GT-PX packaged unit, the split system uses the same components in a more flexible configuration. The GT-PX and GT-PE split system compressor section can be coupled with a variety of air handlers and add-on furnace coils to achieve ultra high efficiencies, while still providing the flexibility of an all-electric or dual fuel system and a remote compressor section location. Split systems are often used in areas where it would be difficult to install a packaged unit, such as in an attic, crawl space or even outdoors.

Puron® Refrigerant

Puron® is a non-chlorine based refrigerant, that with R-407C and R-134A, is seen as the future of all refrigerants used worldwide. Puron® characteristics compared to R-22 are:

- Binary and near azeotropic mixture of 50% R-32 and 50% R-125.
- Higher efficiencies (50-60% higher operating pressures)
- Zero ozone depletion potential and low global warming potential.
- Virtually no glide. Unlike other alternative refrigerants, the two components in Puron® have virtually the same leak rates. Therefore, refrigerant can be added if necessary without recovering the charge.

Copeland Scroll Compressor

Achieve a greater level of comfort. The Copeland Scroll UltraTech™ provides superior comfort compared to fixed-capacity compressors by incorporating a revolutionary two-step design. With a unique 67% part-load capacity step, systems with UltraTech™ maintain precise temperature levels and lower relative humidity. This eliminates uneven peaks and valleys and allows for steady heating and cooling comfort. Homeowners now have a better, more efficient way to power their heating and cooling system, raising their level of comfort, while lowering energy bills. So when your customers need a new heating and cooling system, make sure it has the best technology inside – the Copeland Scroll UltraTech™ compressor.

Save with superior efficiency. Over 40% of summer utility bills can come from the air conditioner compressor operation. A system with the Copeland Scroll UltraTech™ compressor delivers higher efficiency than any other single compressor system. In fact, systems with UltraTech™ provide up to 50% greater energy efficiency as compared to 13-SEER systems – which can save homeowners hundreds of dollars a year in energy costs.

Take it easy with quieter control. Copeland Scroll UltraTech™ is remarkably quiet at both full- and part-load capacity. It is significantly quieter than a reciprocating compressor. Homeowners can enjoy its superior efficiency and comfort without having to hear the operation.

Learn the beauty of the design. With Copeland Scroll UltraTech™, two internal bypass ports enable the system to run at 67% part-load capacity for better efficiency and humidity control. Based on demand, the modulation ring is activated, sealing the bypass ports and instantly shifting capacity to 100%. Take advantage of "shift on the fly" stage changing (no stopping and starting required like other two-stage compressors).

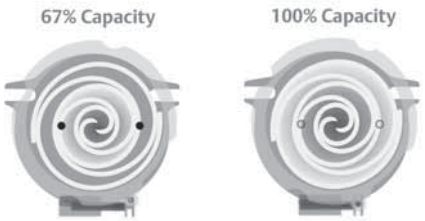

Choose proven scroll performance. While Copeland Scroll UltraTech™ builds on established scroll technology, it is still a scroll at heart, which means it operates with fewer moving parts, no volumetric efficiency drop-off or compression leakage. The result is unsurpassed reliability and virtually silent operation for both indoor and outdoor applications.

Other New Features (Indoor Unit)

- Stylish two-tone look with textured black powder coat paint and stainless steel front access panel.
- Liftout handles for front access panel.
- Factory supplied filter drier for trouble free reliability.
- Easy access low profile horizontal control box.
- Double isolated compressor for quiet and vibration free operation.
- Open Service-Friendly Cabinet (i.e, all components in compressor section can be serviced from the front).

Other New Features (Outdoor Unit)

- Stylish and durable silver baked-on powder coat finish with textured black powder coat paint access panel.
- Large, easy access service panels.
- Double isolated compressor for quiet and vibration-free operation.
- Easy access spacious control box.
- Built-in Earth loop circulating pump and flushing valves.
- Built-in expansion tank for more stable Earth loop pressures.

GT-PX and GT-PE Split Design Features

The GT-PX and GT-PE Split Series has abundant features and industry leading efficiency.

Application Flexibility

- Four Capacities 026, 038, 049, and 064.
- Extended range operation (20-120°F EWT) and flow rates as low as 1.5 gpm per ton.
- Circuit breaker protected loop and hot water generator pumps (Indoor model).
- Field selectable freeze protection setting for well or loop (Indoor model).
- Spring-mounted compressor for additional noise suppression.
- Open Service-Friendly Cabinet (i.e, all components in compressor section can be serviced from the front).
- Compressor section match-ups for a variety of air handlers and add-on furnace coils for the ultimate in system and fuel type flexibility.
- Precharged compressor section with back-seating service valves for quick installation.
- Indoor and outdoor models available
- Built-in Earth loop circulating pump and flushing valves (outdoor model).

Operating Efficiencies

- Puron® zero ozone depletion refrigerant.
- Highest efficiencies in AHRI/ISO/ASHRAE/ANSI 13256-1 ratings for heating COPs, cooling EERs with low water flow rates.
- Two-Stage operation for ultra high efficiencies and unsurpassed comfort.
- Operating temperature range and high efficiency allow shorter loops.
- Optional hot water generator generates hot water at considerable savings.
- Rugged and highly efficient next generation Copeland UltraTech™ scroll compressors provide the industry's highest efficiencies and full capacity with reduced cycling losses.
- Oversized coaxial tube water-to-refrigerant heat exchangers operate at low liquid pressure drop. Convoluted copper (and optional cupronickel) water tube functions efficiently at low-flow rates and provides freeze-damage resistance.

Service Advantages

- Removable service panels.
- Control box provides easy access to all internal components.
- Factory supplied liquid line filter/drier.
- Brass swivel-type water connections for quick connection and elimination of wrenches or sealants during installation (Indoor model).
- Bi-directional thermal expansion valve.
- CXM control features status lights with memory for easy diagnostics.
- Unit Performance Sentinel alerts homeowner of potential performance issues.
- High and low pressure service ports on refrigerant circuit.
- Accurate refrigerant sensing freeze protection.

Factory Quality

- All units are built on an Integrated Process Control Assembly System (IPCS). The IPCS is a unique state of the art manufacturing system that is designed to assure quality of the highest standards of any manufacturer in the water-source industry. The IPCS system:
  - Verifies that the correct components are being assembled.
  - Automatically performs special leak tests on all joints.
  - Conducts pressure tests.
  - Performs highly detailed run test unparalleled in the HVAC industry.
  - Automatically disables packaging for a "failed" unit.
  - Creates computer database for future service analysis an diagnostics from run test results.
- Heavy gauge galvanized steel cabinets are epoxy powder coated for durable and long-lasting finish.
- All refrigerant brazing is done in a nitrogen atmosphere.
- All units are deep evacuated to less than 100 microns prior to refrigerant charging.
- All joints are both helium and halogen leak tested to insure annual leak rate of less than 1/4 ounce.
- Coaxial heat exchanger, refrigerant suction lines and all water lines are fully insulated to eliminate condensation problems in low temperature applications.
- Noise Reduction features include: double isolation mounted compressors; insulated compressor compartment; interior cabinet insulation using 1/2" coated glass fiber.
- Safety features include: high pressure and loss of charge to protect the compressor; low temperature protection sensors to safeguard the coaxial heat exchanger; hot water high-limit and low compressor discharge temperature switch provided to shut down the hot water generator when conditions dictate. Fault lockout enables emergency heat and prevents compressor operation until thermostat or circuit breaker has been reset.

GT-PX (50YDS) Indoor Split Design Features

1. Copeland™ Ultra-Tech™ Two-Stage Unloading Scroll Compressor
2. Oversized Water Coil
3. Fully Insulated Water and Refrigerant Lines
4. Optional Factory Installed Hot Water Generator with Internal Pump
5. Backseating Brass Service Valves with Service Port
6. Brass Swivel Water Connections
7. Unit Performance Sentinel: Automatic Alert System Lets You Know If The System Is Not Running At Peak Performance*
8. Double Spring And Grommet Compressor Isolation For Ultra Quiet Operation
9. Three Easy, Lift-out Service Access Panels With Stainless Steel Front Panels

* When installed with a UPS compatible (fault light) Thermostat.

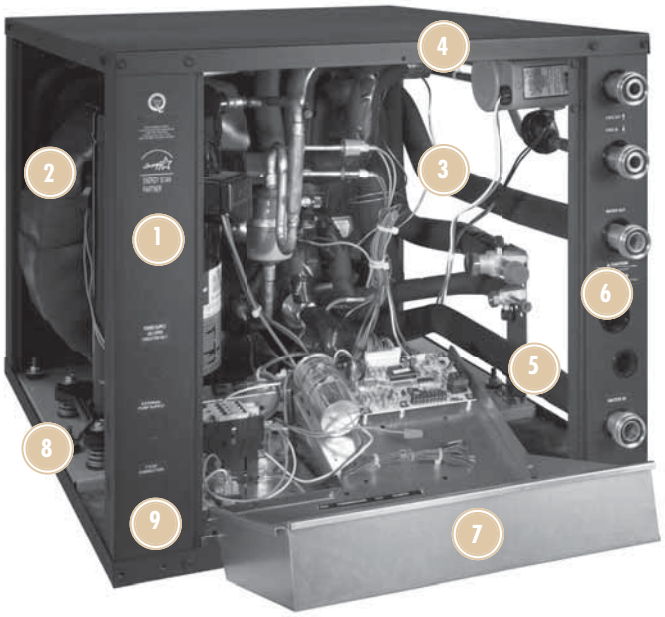

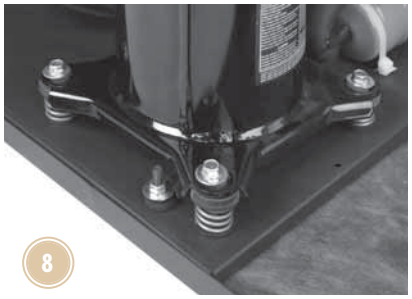

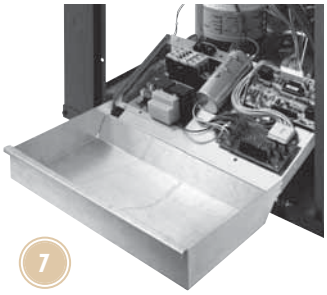

Puron®
the environmentally sound refrigerant

Features Puron®
Zero Ozone
Depletion Refrigerant

GT-PE (50YPS) Outdoor Split Design Features

1. Copeland™ Ultra-Tech™ Two-Stage Unloading Scroll Compressor
2. Oversized Water Coil
3. Fully Insulated Water and Refrigerant Lines
4. Large Easily Accessible Control Box
5. Backseating Brass Service Valves with Service Port
6. Stainless Steel Braided Hoses for Easy Connection to Loop Piping
7. Unit Performance Sentinel: Automatic Alert System Lets You Know If The System Is Not Running At Peak Performance*
8. Double Grommet Compressor Isolation For Ultra Quiet Operation
9. Factory Built-In Loop Pump With Flushing Valves
10. Factory Built-In Expansion Tank For More Stable Loop Pressure

* When installed with a UPS compatible (fault light) Thermostat.

Puron
the environmentally sound refrigerant

Features Puron®
Zero Ozone
Depletion Refrigerant

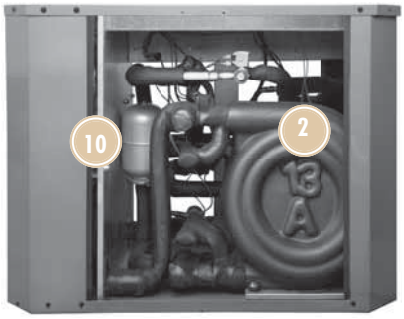

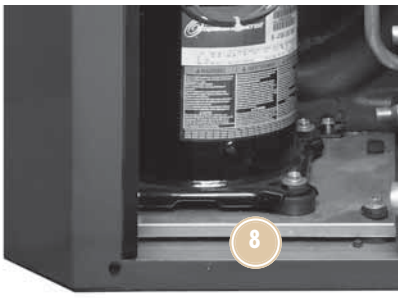

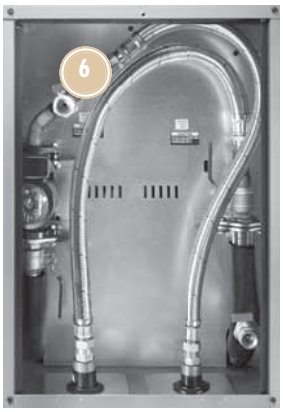

Hot water generation on outdoor splits is achieved with an external accessory, mounted indoors.

Model Key, Reference Calculations & Legend

Unit Model Key

GT-PX

1 2 3	4 5 6	7	8	9	10	11	12
50	YDS	026	N	C	D	3	0	1

Prefix

Series
YDS = Extended Range Puron Ultra High Efficiency Residential Split

Unit Size
026, 038, 049, 064

Air Flow Configuration

SPLIT RESIDENTIAL UNIT				
Option	Return	Discharge	Filter	Motor
N	NONE	NONE	NONE	NONE

Controls
C = CXM

Heat Exchanger Options

	Copper	Cupro-Nickel
Without Hot Water Generator	C	N
Standard	D	P

Voltage
3 = 208-230/60/1

Revision Level
0 = Current Revision

Packaging
1 = Single Pack, Domestic

GT-PE

1 2 3	4 5 6	7	8	9	10	11	12
50	YPS	026	N	C	C	3	0	1

PREFIX

SERIES
YPS = Outdoor Split Residential

UNIT SIZE
026
038
049
064

AIR FLOW CONFIGURATION
N = NOT APPLICABLE

CONTROLS
C = CXM

HEAT EXCHANGER OPTIONS
C = Copper Coax
N = Cupro-Nickel Coax

VOLTAGE
3 = 206-230/60/1

REVISION LEVEL
0 = Current Revision

PACKAGING
1 = Single Pack, Domestic

Heating

$$LWT = EWT - \frac{HE}{GPM \times 500}$$

$$LAT = EAT + \frac{HC}{CFM \times 1.08}$$

Cooling

$$LWT = EWT + \frac{HR}{GPM \times 500}$$

$$LC = TC - SC$$

$$LAT\ (DB) = EAT\ (DB) - \frac{SC}{CFM \times 1.08}$$

$$S/T = \frac{SC}{TC}$$

Hot Water Generator capacities (HWC) are based on potable water flow rate of 0.4 gpm per nominal equipment ton and 90°F entering potable water temperature.

CFM = airflow, cubic feet/minute
EWT = entering water temperature, °F
GPM = water flow in US gallons/minute
EAT = entering air temperature, Fahrenheit (dry bulb/wet bulb)
HC = air heating capacity, Mbtuh
TC = total cooling capacity, Mbtuh
SC = sensible cooling capacity, Mbtuh
KW = total power unit input, KiloWatts
HR = total heat of rejection, Mbtuh
HE = total heat of extraction, Mbtuh
HWC = Hot Water Generator (desuperheater) capacity, Mbtuh
WPD = Water coil pressure drop (psi & ft hd)
EER = Energy Efficiency Ratio = BTU output/Watt input
COP = Coefficient of Performance = BTU output/BTU input
LWT = leaving water temperature, °F
LAT = leaving air temperature, °F
LC = latent cooling capacity, Mbtuh
S/T = sensible to total cooling ratio

About AHRI/ISO/ASHRAE 13256-1

About AHRI/ISO/ASHRAE 13256-1

AHRI/ASHRAE/ISO 13256-1 (Air-Conditioning and Refrigeration Institute/American Society of Heating, Refrigerating and Air Conditioning Engineers/International Standards Organization) is a certification standard for water-source heat pumps used in the following applications:

- WLHP (Water Loop Heat Pump – Boiler/Tower)
- GWHP (Ground Water Heat Pump – Open Loop)
- GLHP (Ground Loop Heat Pump – Geothermal)

The directory at http://www.AHRIdirectory.org is constantly being updated and immediately available on the Internet. All ratings are submitted by the manufacturer for certification, and must be approved by AHRI. Therefore, there is a significant difference between AHRI "certified" and AHRI "rated." Thirty percent of a manufacturer's basic models must be tested each year. AHRI selects models at random from stock for testing on the basis of its evaluation of a participant's certification data.

Units that fail one or more certified test (90% of declared performance or lower) may be declared defective. If the initial failure is a performance test, the manufacturer must obsolete all units within the same basic model group or elect to have a second sample tested. If the second unit fails a performance test, it must be obsoleted, together with all units within the same basic model group.

Temperatures used in AHRI certification standards are S.I. (Système International – metric) based. For example, typical catalog data for cooling is shown at 80°F DB/67°F WB [26.7°C DB/19.4°C] entering air temperature, but the AHRI standard for cooling is 80.6°F DB/66.2°F WB [27°C DB/19°C], since it is based upon whole numbers in degrees Celsius. Water and air temperatures for the standard are shown below.

Test Condition Comparison Table

	WLHP	GWHP	GLHP
Cooling			
Entering Air Temperature - DB/WB °F [°C]	80.6/66.2 [27/19]	80.6/66.2 [27/19]	80.6/66.2 [27/19]
Entering Water Temperature - °F [°C]	86 [30]	59 [15]	77 [25]
Fluid Flow Rate	*	*	*
Heating			
Entering Air Temperature - DB/WB °F [°C]	68 [20]	68 [20]	68 [20]
Entering Water Temperature - °F [°C]	68 [20]	50 [10]	32 [0]
Fluid Flow Rate	*	*	*

*Flow rate is specified by the manufacturer

Data certified by AHRI include heating/cooling capacities, EER (Energy Efficiency Ratio – Btuh per Watt) and COP (Btuh per Btuh) at the various conditions shown above. Pump power correction is calculated to adjust efficiencies for pumping Watts. Within each model, only one water flow rate is specified for all three groups, and pumping Watts are calculated using the formula below. This additional power is added onto the existing power consumption.

- Pump power correction = (gpm x 0.0631) x (Press Drop x 2990)/300

Fan power is corrected to zero external static pressure using the equation below. The nominal airflow is rated at a specific external static pressure. This effectively reduces the power consumption of the unit and increases cooling capacity but decreases heating capacity.

- Fan Power Correction = (cfm x 0.472) x (esp x 249)/300

Capacities and efficiencies are calculated using the following equations:

- ISO Cooling Capacity = Cooling Capacity (Btuh) + [Fan Power Correction (Watts) x 3.412]
- ISO EER Efficiency (Btuh/W) =
  ISO Cooling Capacity (Btuh)/[Power Input (Watts) – Fan Power Correction (Watts) + Pump Power Correction (Watts)]
- ISO Heating Capacity = Heating Capacity (Btuh) – [Fan Power Correction (Watts) x 3.412]
- ISO COP Efficiency (Btuh/Btuh) =
  ISO Heating Capacity (Btuh) x 3.412/[Power Input (Watts) - Fan Power Correction (Watts) + Pump Power Correction (Watts)]

AHRI/ISO/ASHRAE/ANSI 13256-1 Performance 50YDS, 50YPS Models

ASHRAE/AHRI/ISO 13256-1. English (IP) Units

Model	Capacity Modulation	Water Loop Heat Pump				Ground Water Heat Pump				Ground Loop Heat Pump			
		Cooling 86°F		Heating 68°F		Cooling 59°F		Heating 50°F		Cooling Full Load 77°F Part Load 68°F		Heating Full Load 32°F Part Load 41°F	
		Capacity Btuh	EER Btuh/W	Capacity Btuh	COP	Capacity Btuh	EER Btuh/W	Capacity Btuh	COP	Capacity Btuh	EER Btuh/W	Capacity Btuh	COP
026	Full	24,700	15.0	31,400	5.3	28,600	23.2	25,600	4.7	26,400	18.0	19,500	3.9
026	Part	18,300	16.3	24,300	5.4	22,000	29.4	19,200	4.6	20,800	24.5	16,600	4.1
038	Full	35,900	14.8	44,700	5.0	40,100	21.4	35,900	4.5	37,300	16.7	27,000	3.8
038	Part	24,400	16.5	30,300	5.6	28,000	27.1	24,400	4.6	27,100	23.7	21,400	4.1
049	Full	48,100	14.6	59,400	5.2	53,900	20.9	47,700	4.6	50,200	16.6	37,200	4.0
049	Part	33,300	16.0	42,000	5.4	38,700	26.8	33,800	4.7	37,000	22.8	29,900	4.2
064	Full	56,900	14.5	74,000	4.7	63,800	19.2	58,800	4.3	59,500	15.3	45,700	3.6
064	Part	40,800	15.8	52,700	5.2	46,000	25.7	42,300	4.4	44,800	22.2	37,500	4.0

Cooling capacities based upon 80.6°F DB, 66.2°F WB entering air temperature
Heating capacities based upon 68°F DB, 59°F WB entering air temperature
Ground Loop Heat Pump ratings based on 15% antifreeze solution
All ratings based upon operation at lower voltage of dual voltage rated models

ASHRAE/AHRI/ISO 13256-1. Metric (SI) Units

Model	Capacity Modulation	Water Loop Heat Pump				Ground Water Heat Pump				Ground Loop Heat Pump			
		Cooling 30°C		Heating 20°C		Cooling 15°C		Heating 10°C		Cooling Full Load 25°C Part Load 20°C		Heating Full Load 0°C Part Load 5°C	
		Capacity Watts	EER W/W	Capacity Watts	COP	Capacity Watts	EER W/W	Capacity Watts	COP	Capacity Watts	EER W/W	Capacity Watts	COP
026	Full	7,239	4.4	9,203	5.3	8,382	6.8	7,503	4.7	7,737	5.3	5,715	3.9
026	Part	5,363	4.8	7,122	5.4	6,448	8.6	5,627	4.6	6,096	7.2	4,865	4.1
038	Full	10,522	4.3	13,101	5.0	11,753	6.3	10,522	4.5	10,932	4.9	7,913	3.8
038	Part	7,151	4.8	8,880	5.6	8,206	7.9	7,151	4.6	7,943	6.9	6,272	4.1
049	Full	14,097	4.3	17,409	5.2	15,797	6.1	13,980	4.6	14,713	4.9	10,903	4.0
049	Part	9,760	4.7	12,309	5.4	11,342	7.9	9,906	4.7	10,844	6.7	8,763	4.2
064	Full	16,676	4.2	21,688	4.7	18,699	5.6	17,233	4.3	17,438	4.5	13,394	3.6
064	Part	11,958	4.6	15,445	5.2	13,482	7.5	12,397	4.4	13,130	6.5	10,991	4.0

Cooling capacities based upon 80.6°F DB, 66.2°F WB entering air temperature
Heating capacities based upon 68°F DB, 59°F WB entering air temperature
Ground Loop Heat Pump ratings based on 15% antifreeze solution
All ratings based upon operation at lower voltage of dual voltage rated models

Full Load Correction Factors

Air Flow Correction Table

Airflow	Cooling				Heating		
% of Rated	Total Capacity	Sensible Capacity	Power	Heat of Rejection	Heating Capacity	Power	Heat of Extraction
60%	0.925	0.788	0.913	0.922	0.946	1.153	0.896
69%	0.946	0.829	0.926	0.942	0.959	1.107	0.924
75%	0.960	0.861	0.937	0.955	0.969	1.078	0.942
81%	0.972	0.895	0.950	0.968	0.977	1.053	0.959
88%	0.983	0.930	0.965	0.979	0.985	1.032	0.974
94%	0.992	0.965	0.982	0.990	0.993	1.014	0.988
100%	1.000	1.000	1.000	1.000	1.000	1.000	1.000
106%	1.007	1.033	1.020	1.009	1.006	0.989	1.011
113%	1.012	1.064	1.042	1.018	1.012	0.982	1.019
119%	1.016	1.092	1.066	1.025	1.018	0.979	1.027
125%	1.018	1.116	1.091	1.032	1.022	0.977	1.033
130%	1.019	1.132	1.112	1.037	1.026	0.975	1.038

Entering Air Correction Tables

Heating			
Entering Air DB°F	Heating Capacity	Power	Heat of Extraction
40	1.052	0.779	1.120
45	1.043	0.808	1.102
50	1.035	0.841	1.084
55	1.027	0.877	1.065
60	1.019	0.915	1.045
65	1.010	0.957	1.023
68	1.004	0.982	1.010
70	1.000	1.000	1.000
75	0.989	1.045	0.974
80	0.976	1.093	0.946

* = Sensible capacity equals total capacity
AHRI/ISO/ASHRAE 13256-1 uses entering air conditions of Cooling - 80.6°F DB/66.2°F WB, 1 and Heating - 68°F DB/59°F WB entering air temperature

Cooling													
Entering Air WB°F	Total Capacity	Sensible Cooling Capacity Multiplier - Entering DB °F										Power	Heat of Rejection
		60	65	70	75	80	80.6	85	90	95	100		
45	0.832	1.346	1.461	1.603	*	*	*	*	*	*	*	0.946	0.853
50	0.850	1.004	1.174	1.357	*	*	*	*	*	*	*	0.953	0.870
55	0.880	0.694	0.902	1.115	1.331	*	*	*	*	*	*	0.964	0.896
60	0.922		0.646	0.875	1.103	1.329	1.356	*	*	*	*	0.977	0.932
65	0.975			0.639	0.869	1.096	1.123	1.320	*	*	*	0.993	0.979
66.2	0.990			0.582	0.812	1.039	1.066	1.262	1.482	*	*	0.997	0.991
67	1.000			0.545	0.774	1.000	1.027	1.223	1.444	*	*	1.000	1.000
70	1.040				0.630	0.853	0.880	1.075	1.297	1.517	*	1.011	1.035
75	1.117					0.601	0.627	0.821	1.046	1.275	1.510	1.033	1.101

Part Load Correction Factors

Air Flow Correction Table

Airflow	Cooling				Heating		
% of Rated	Total Capacity	Sensible Capacity	Power	Heat of Rejection	Heating Capacity	Power	Heat of Extraction
60%	0.920	0.781	0.959	0.927	0.946	1.241	0.881
69%	0.942	0.832	0.964	0.946	0.960	1.163	0.915
75%	0.956	0.867	0.696	0.959	0.969	1.115	0.937
81%	0.969	0.901	0.975	0.970	0.978	1.076	0.956
88%	0.981	0.934	0.982	0.981	0.986	1.043	0.973
94%	0.991	0.967	0.990	0.991	0.993	1.018	0.988
100%	1.000	1.000	1.000	1.000	1.000	1.000	1.000
106%	1.007	1.033	1.011	1.008	1.006	0.990	1.010
113%	1.013	1.065	1.023	1.015	1.012	0.986	1.017
119%	1.018	1.098	1.036	1.021	1.017	0.983	1.024
125%	1.021	1.131	1.051	1.026	1.021	0.981	1.030
130%	1.023	1.159	1.063	1.030	1.024	0.979	1.034

Entering Air Correction Tables

Heating			
Entering Air DB°F	Heating Capacity	Power	Heat of Extraction
40	1.084	0.732	1.161
45	1.073	0.764	1.140
50	1.060	0.802	1.117
55	1.046	0.846	1.090
60	1.031	0.893	1.061
65	1.016	0.945	1.031
68	1.006	0.978	1.013
70	1.000	1.000	1.000
75	0.984	1.058	0.968
80	0.968	1.117	0.936

* = Sensible capacity equals total capacity
AHRI/ISO/ASHRAE 13256-1 uses entering air conditions of Cooling - 80.6°F DB/66.2°F WB, 1 and Heating - 68°F DB/59°F WB entering air temperature

Cooling														
Entering Air WB°F	Total Capacity	Sensible Cooling Capacity Multiplier - Entering DB °F										Power	Heat of Rejection
		60	65	70	75	80	80.6	85	90	95	100		
45	0.876	1.286	1.302	1.389	*	*	*	*	*	*	*	0.981	0.895
50	0.883	1.002	1.099	1.241	*	*	*	*	*	*	*	0.985	0.901
55	0.903	0.706	0.871	1.060	1.271	*	*	*	*	*	*	0.989	0.918
60	0.935		0.617	0.844	1.079	1.319	1.349	*	*	*	*	0.993	0.945
65	0.979			0.595	0.849	1.096	1.128	1.342	*	*	*	0.998	0.982
66.2	0.991			0.531	0.789	1.040	1.070	1.284	1.522	*	*	0.999	0.993
67	1.000			0.486	0.747	1.000	1.030	1.245	1.481	*	*	1.000	1.000
70	1.035				0.583	0.842	0.873	1.090	1.327	1.552	*	1.003	1.030
75	1.105					0.552	0.584	0.811	1.057	1.290	1.510	1.008	1.088

Performance Data Selection Notes

For operation in the shaded area when water is used in lieu of an anti-freeze solution, the LWT (Leaving Water Temperature) must be calculated. Flow must be maintained to a level such that the LWT is maintained above 40°F [4.4*C] when the JW3 jumper is not clipped (see example below). This is due to the potential of the refrigerant temperature being as low as 32°F [0°C] with 40°F [4.4°C] LWT, which may lead to a nuisance cutout due to the activation of the Low Temperature Protection. JW3 should never be clipped for standard range equipment or systems without antifreeze.

Example:

At 50°F EWT (Entering Water Temperature) and 1.5 gpm/ton, a 3 ton unit has a HE of 22,500 Btuh. To calculate LWT, rearrange the formula for HE as follows:

HE = TD x GPM x 500, where HE = Heat of Extraction (Btuh); TD = temperature difference (EWT - LWT) and GPM = U.S. Gallons per Minute.

TD = HE/(GPM x 500)

TD = 22,500/(4.5 x 500)

TD = 10°F

LWT = EWT - TD

LWT = 50 - 10 = 40°F

Performance capacities shown in thou

		Heating - EAT 70°F					
R	HWC	HC	kW	HE	LAT	COP	HW
		39.4	3.90	26.5	93.2	2.96	4.0
		40.0	3.78	27.2	90.0	3.10	3.5
19.3	-	43.5	4.06	30.0	95.6	3.14	4.1
18.6	-	44.1	3.93	30.8	92.1	3.29	3.6
20.5	-	45.3	4.11	31.7	96.6	3.23	4.1
19.8	-	46.0	3.98	32.5	93.0	3.39	3.5
21.4	-	46.2	4.14	32.5	97.2	3.27	4.0
20.6	-	46.9	4.01	33.4	93.5	3.43	3.5
18.5	-	50.1	4.29	35.9	99.5	3.42	4.3
17.9	-	50.8	4.16	36.8	95.4	3.58	3.7
19.8	-	52.2	4.36	37.7	100.7	3.51	4.2
19.1	-	53.0	4.22	38.7	96.5	3.68	3.6
0.4	-	53.4	4.39	38.8	101.4	3.57	4.1
6	-	54.2	4.25	39.8	97.1	3.74	3.6
	2.0	57.0	4.53	41.8	103.5	3.69	4
	2.1	57.8	4.39	42.9	98.9	3.86	
	1.8	59.5	4.60	44.1	105.0	3.79	
	1.8	60.4	4.46	45.3	100.2	3.97	
		61.0	4.64	45.4	105.9		
		61.9	4.50	46.6	101.0		
			4.78	48.1			

In this example, as long as the EWT does not fall below 50°F, the system will operate as designed. For EWTs below 50°F, higher flow rates will be required (open loop systems, for example, require at least 2 gpm/ton when EWT is below 50°F).

Performance Data — 50YDS/50YPS026 Part Load With FV4003

530 CFM Nominal (Rated) Airflow Cooling, 530 CFM Nominal (Rated) Airflow Heating

Performance capacities shown in thousands of Btuh

EWT °F	GPM	WPD		Cooling - EAT 80/67°F							Heating - EAT 70°F					
		PSI	FT	Airflow CFM	TC	SC	kW	HR	EER	HWC*	HC	kW	HE	LAT	COP	HWC*
20	7.00	4.5	10.4	Operation not recommended							10.9	1.17	7.2	92.4	2.73	1.9
	7.00	4.5	10.4								11.1	1.12	7.4	89.4	2.90	1.7
30	3.50	1.2	2.8	450	22.1	11.7	0.62	24.1	35.6	-	13.2	1.23	9.1	97.2	3.15	2.0
	3.50	1.2	2.8	530	22.5	12.5	0.63	24.6	35.7	-	13.4	1.18	9.4	93.4	3.33	1.7
	5.75	2.9	6.7	450	22.3	11.7	0.61	24.3	36.6	-	13.8	1.23	9.7	98.4	3.29	2.0
	5.75	2.9	6.7	530	22.7	12.5	0.62	24.8	36.6	-	14.0	1.18	10.0	94.5	3.48	1.7
	7.00	4.1	9.5	450	22.4	11.7	0.60	24.4	37.3	-	14.0	1.23	9.9	98.8	3.34	1.9
	7.00	4.1	9.5	530	22.8	12.5	0.61	24.9	37.4	-	14.2	1.18	10.2	94.8	3.53	1.7
40	3.50	1.1	2.5	450	22.6	12.6	0.70	24.9	32.3	-	16.0	1.32	11.6	102.9	3.55	2.0
	3.50	1.1	2.5	530	23.0	13.5	0.71	25.4	32.4	-	16.2	1.27	11.9	98.3	3.74	1.8
	5.75	2.6	6.0	450	22.8	12.6	0.65	24.9	35.1	-	16.7	1.32	12.3	104.4	3.71	2.0
	5.75	2.6	6.0	530	23.2	13.5	0.66	25.4	35.2	-	16.9	1.27	12.6	99.5	3.90	1.7
	7.00	3.6	8.3	450	22.9	12.6	0.65	25.0	35.2	-	16.9	1.32	12.5	104.8	3.75	2.0
	7.00	3.6	8.3	530	23.3	13.5	0.66	25.5	35.3	-	17.1	1.27	12.8	99.9	3.95	1.7
50	3.50	1.0	2.3	450	22.1	12.9	0.79	24.8	28.0	0.7	18.6	1.38	14.1	108.3	3.95	2.1
	3.50	1.0	2.3	530	22.5	13.8	0.80	25.3	28.1	0.7	18.9	1.32	14.5	103.0	4.20	1.8
	5.75	2.4	5.5	450	22.4	12.9	0.74	24.8	30.3	0.6	19.4	1.38	14.8	109.9	4.12	2.1
	5.75	2.4	5.5	530	22.8	13.8	0.75	25.3	30.4	0.6	19.7	1.32	15.2	104.4	4.37	1.8
	7.00	3.4	7.9	450	22.4	12.9	0.72	24.8	31.1	0.6	19.6	1.38	15.0	110.3	4.16	2.0
	7.00	3.4	7.9	530	22.8	13.8	0.73	25.3	31.2	0.6	19.9	1.32	15.4	104.8	4.42	1.8
60	3.50	1.0	2.3	450	21.1	12.8	0.90	24.1	23.4	1.1	21.3	1.44	16.4	113.8	4.34	2.2
	3.50	1.0	2.3	530	21.5	13.7	0.92	24.6	23.4	1.1	21.6	1.38	16.9	107.7	4.59	1.9
	5.75	2.3	5.3	450	21.6	13.0	0.83	24.4	26.0	1.0	22.2	1.45	17.3	115.7	4.49	2.2
	5.75	2.3	5.3	530	22.0	13.9	0.85	24.9	25.9	1.0	22.5	1.39	17.8	109.3	4.74	1.9
	7.00	3.2	7.4	450	21.7	13.0	0.81	24.4	26.8	0.9	22.4	1.45	17.5	116.1	4.53	2.1
	7.00	3.2	7.4	530	22.1	13.9	0.83	24.9	26.6	0.9	22.7	1.39	18.0	109.7	4.79	1.9
70	3.50	0.9	2.1	450	19.6	12.4	1.03	23.2	19.0	1.4	24.0	1.48	19.0	119.4	4.75	2.3
	3.50	0.9	2.1	530	20.0	13.3	1.05	23.6	19.0	1.5	24.3	1.42	19.5	112.5	5.02	2.0
	5.75	2.1	4.9	450	20.3	12.6	0.95	23.5	21.4	1.3	24.8	1.49	19.9	121.0	4.88	2.3
	5.75	2.1	4.9	530	20.7	13.5	0.97	24.0	21.3	1.4	25.2	1.43	20.4	114.0	5.16	2.0
	7.00	3.0	6.9	450	20.5	12.7	0.93	23.6	22.0	1.2	25.1	1.49	20.0	121.6	4.94	2.2
	7.00	3.0	6.9	530	20.9	13.6	0.95	24.1	22.0	1.2	25.5	1.43	20.6	114.5	5.23	1.9
80	3.50	0.8	1.8	450	18.1	11.9	1.18	22.1	15.3	1.8	26.6	1.52	21.4	124.7	5.13	2.4
	3.50	0.8	1.8	530	18.5	12.7	1.20	22.5	15.4	1.8	27.0	1.46	22.0	117.2	5.42	2.1
	5.75	2.0	4.6	450	18.8	12.1	1.10	22.6	17.1	1.6	27.7	1.53	22.4	127.0	5.31	2.4
	5.75	2.0	4.6	530	19.2	13.0	1.12	23.0	17.1	1.7	28.1	1.47	23.0	119.1	5.60	2.1
	7.00	2.8	6.5	450	19.0	12.2	1.08	22.7	17.6	1.5	28.0	1.54	22.7	127.6	5.33	2.4
	7.00	2.8	6.5	530	19.4	13.1	1.10	23.1	17.6	1.5	28.4	1.48	23.3	119.6	5.62	2.1
85	3.50	0.8	1.8	450	17.4	11.6	1.26	21.7	13.8	2.0	28.0	1.55	22.7	127.6	5.29	2.5
	3.50	0.8	1.8	530	17.7	12.4	1.28	22.1	13.8	2.0	28.4	1.49	23.3	119.6	5.59	2.2
	5.75	1.9	4.4	450	18.1	11.9	1.18	22.1	15.3	1.8	29.1	1.56	23.7	129.9	5.47	2.5
	5.75	1.9	4.4	530	18.4	12.7	1.20	22.5	15.3	1.9	29.5	1.50	24.4	121.5	5.76	2.2
	7.00	2.7	6.2	450	18.2	12.0	1.15	22.2	15.8	1.7	29.4	1.56	24.0	130.5	5.52	2.5
	7.00	2.7	6.2	530	18.6	12.8	1.17	22.6	15.9	1.7	29.8	1.50	24.7	122.1	5.82	2.2
90	3.50	0.8	1.8	450	16.7	11.4	1.34	21.3	12.5	2.4	29.4	1.57	23.9	130.5	5.49	2.6
	3.50	0.8	1.8	530	17.0	12.2	1.36	21.7	12.5	2.5	29.8	1.51	24.6	122.1	5.78	2.2
	5.75	1.9	4.4	450	17.2	11.6	1.26	21.5	13.7	1.9	30.6	1.60	25.1	133.0	5.61	2.6
	5.75	1.9	4.4	530	17.5	12.4	1.28	21.9	13.7	2.0	31.0	1.53	25.8	124.2	5.94	2.2
	7.00	2.7	6.2	450	17.4	11.7	1.23	21.6	14.1	1.8	30.9	1.60	25.4	133.6	5.66	2.5
	7.00	2.7	6.2	530	17.7	12.5	1.25	22.0	14.2	1.8	31.3	1.53	26.1	124.7	6.00	2.2
100	3.50	0.8	1.8	450	15.1	10.8	1.50	20.3	10.1	2.4	Operation not recommended					
	3.50	0.8	1.8	530	15.4	11.6	1.53	20.7	10.1	2.5						
	5.75	1.8	4.2	450	15.6	11.0	1.43	20.5	10.9	2.2						
	5.75	1.8	4.2	530	15.9	11.8	1.46	20.9	10.9	2.3						
	7.00	2.6	6.0	450	15.8	11.0	1.40	20.6	11.3	2.0						
	7.00	2.6	6.0	530	16.1	11.8	1.43	21.0	11.3	2.0						
110	3.50	0.7	1.6	450	13.9	10.7	1.70	19.8	8.2	2.7						
	3.50	0.7	1.6	530	14.2	11.4	1.73	20.2	8.2	2.8						
	5.75	1.7	3.9	450	14.2	10.6	1.63	19.8	8.7	2.5						
	5.75	1.7	3.9	530	14.5	11.3	1.66	20.2	8.7	2.5						
	7.00	2.5	5.8	450	14.4	10.7	1.60	19.9	9.0	2.2						
	7.00	2.5	5.8	530	14.7	11.4	1.63	20.3	9.0	2.3						
120	3.50	0.7	1.6	450	12.9	10.6	1.95	19.6	6.6	3.0						
	3.50	0.7	1.6	530	13.2	11.3	1.99	20.0	6.6	3.0						
	5.75	1.7	3.9	450	13.2	10.5	1.85	19.5	7.1	2.7						
	5.75	1.7	3.9	530	13.5	11.2	1.88	19.9	7.2	2.7						
	7.00	2.4	5.5	450	13.2	10.5	1.82	19.5	7.3	2.4						
	7.00	2.4	5.5	530	13.5	11.2	1.85	19.9	7.3	2.5						

Interpolation is permissible; extrapolation is not.
All entering air conditions are 80°F DB and 67°F WB in cooling, and 70°F DB in heating.
AHRI/ISO certified conditions are 80.6°F DB and 66.2°F WB in cooling and 68°F DB in heating.
Table does not reflect fan or pump power corrections for AHRI/ISO conditions.
All performance is based upon the lower voltage of dual voltage rated units.
Operation below 40°F EWT is based upon a 15% antifreeze solution.
Operation below 60°F EWT requires optional insulated water/refrigerant circuit (standard on residential models).
See performance correction tables for operating conditions other than those listed above.
See Performance Data Selection Notes for operation within the shaded areas.
"-" HWG operation is limited by a discharge temperature switch.
*Indoor Split Only.

Performance Data — 50YDS/50YPS026 Full Load With FV4003

850 CFM Nominal (Rated) Airflow Cooling, 850 CFM Nominal (Rated) Airflow Heating

Performance capacities shown in thousands of Btuh

EWT °F	GPM	WPD		Cooling - EAT 80/67°F							Heating - EAT 70°F					
		PSI	FT	Airflow CFM	TC	SC	kW	HR	EER	HWC*	HC	kW	HE	LAT	COP	HWC*
20	8.00	5.6	12.9	Operation not recommended							14.9	1.54	9.8	88.4	2.84	2.4
	8.00	5.6	12.9								15.1	1.49	10.1	85.9	2.97	2.1
30	4.00	1.5	3.5	750	29.4	18.4	1.09	32.6	27.0	-	17.6	1.60	12.4	91.7	3.22	2.4
	4.00	1.5	3.5	880	29.9	19.8	1.15	33.8	26.0	-	17.9	1.55	12.7	88.8	3.38	2.1
	6.00	3.1	7.2	750	29.6	18.4	1.04	32.6	28.5	-	18.5	1.61	13.2	92.8	3.37	2.4
	6.00	3.1	7.2	880	30.1	19.8	1.10	33.8	27.4	-	18.8	1.56	13.5	89.8	3.53	2.1
	8.00	5.1	11.8	750	29.8	18.5	1.01	32.7	29.5	-	18.9	1.62	13.5	93.3	3.42	2.4
	8.00	5.1	11.8	880	30.3	19.9	1.07	33.9	28.3	-	19.2	1.57	13.9	90.2	3.58	2.1
40	4.00	1.4	3.2	750	29.2	19.0	1.18	32.7	24.7	-	21.1	1.67	15.5	96.0	3.70	2.5
	4.00	1.4	3.2	880	29.7	20.4	1.25	33.9	23.8	-	21.4	1.62	15.9	92.5	3.87	2.2
	6.00	2.8	6.5	750	29.4	19.0	1.13	32.8	26.0	-	22.1	1.69	16.4	97.3	3.83	2.5
	6.00	2.8	6.5	880	29.9	20.4	1.19	34.0	25.1	-	22.4	1.64	16.8	93.6	4.00	2.2
	8.00	4.6	10.6	750	29.5	19.0	1.10	32.8	26.8	-	22.6	1.71	16.9	97.9	3.87	2.4
	8.00	4.6	10.6	880	30.0	20.4	1.16	34.0	25.9	-	22.9	1.66	17.3	94.1	4.04	2.1
50	4.00	1.3	3.0	750	28.4	19.2	1.30	32.3	21.8	1.1	24.2	1.74	18.3	99.9	4.08	2.6
	4.00	1.3	3.0	880	28.9	20.6	1.37	33.5	21.1	1.1	24.6	1.69	18.8	95.9	4.27	2.3
	6.00	2.6	6.0	750	28.9	19.2	1.23	32.6	23.5	1.0	25.2	1.78	19.3	101.1	4.15	2.6
	6.00	2.6	6.0	880	29.4	20.7	1.30	33.8	22.6	1.0	25.6	1.72	19.8	96.9	4.36	2.3
	8.00	4.3	9.9	750	29.1	19.2	1.19	32.7	24.5	0.9	25.8	1.80	19.7	101.9	4.20	2.6
	8.00	4.3	9.9	880	29.6	20.7	1.26	33.9	23.5	0.9	26.2	1.74	20.2	97.6	4.41	2.2
60	4.00	1.2	2.8	750	27.2	18.9	1.42	31.7	19.2	1.5	27.1	1.83	20.9	103.5	4.34	2.8
	4.00	1.2	2.8	880	27.7	20.3	1.50	32.9	18.5	1.6	27.5	1.77	21.5	98.9	4.55	2.5
	6.00	2.5	5.8	750	27.9	19.2	1.34	32.1	20.8	1.3	28.1	1.86	21.8	104.7	4.43	2.8
	6.00	2.5	5.8	880	28.4	20.6	1.42	33.3	20.0	1.4	28.5	1.80	22.4	100.0	4.64	2.4
	8.00	4.0	9.2	750	28.2	19.2	1.32	32.2	21.4	1.1	28.7	1.87	22.3	105.4	4.50	2.7
	8.00	4.0	9.2	880	28.7	20.7	1.39	33.4	20.6	1.2	29.1	1.81	22.9	100.6	4.71	2.4
70	4.00	1.1	2.5	750	25.8	18.4	1.56	30.9	16.5	2.0	29.8	1.90	23.3	106.8	4.60	3.1
	4.00	1.1	2.5	880	26.3	19.8	1.65	32.0	15.9	2.1	30.2	1.84	23.9	101.8	4.81	2.7
	6.00	2.3	5.3	750	26.6	18.8	1.49	31.4	17.9	1.8	30.7	1.93	24.2	107.9	4.66	3.0
	6.00	2.3	5.3	880	27.1	20.2	1.57	32.5	17.3	1.8	31.2	1.87	24.8	102.8	4.89	2.6
	8.00	3.8	8.8	750	27.0	19.0	1.44	31.6	18.8	1.5	31.3	1.95	24.6	108.6	4.70	3.0
	8.00	3.8	8.8	880	27.5	20.4	1.52	32.7	18.1	1.5	31.8	1.89	25.3	103.5	4.93	2.6
80	4.00	1.0	2.3	750	24.4	17.9	1.72	29.9	14.2	2.6	32.1	1.97	25.4	109.6	4.78	3.4
	4.00	1.0	2.3	880	24.8	19.2	1.82	31.0	13.6	2.6	32.6	1.91	26.1	104.3	5.00	2.9
	6.00	2.2	5.1	750	25.2	18.2	1.64	30.4	15.4	2.2	33.3	2.01	26.4	111.1	4.86	3.3
	6.00	2.2	5.1	880	25.6	19.6	1.73	31.5	14.8	2.3	33.8	1.95	27.1	105.6	5.08	2.9
	8.00	3.5	8.1	750	25.5	18.4	1.59	30.6	16.0	1.9	33.8	2.03	26.9	111.7	4.88	3.3
	8.00	3.5	8.1	880	26.0	19.8	1.68	31.7	15.5	1.9	34.3	1.97	27.6	106.1	5.10	2.8
85	4.00	1.0	2.3	750	23.5	17.5	1.82	29.4	12.9	2.9	33.3	2.01	26.5	111.1	4.86	3.6
	4.00	1.0	2.3	880	23.9	18.8	1.92	30.5	12.4	3.0	33.8	1.95	27.2	105.6	5.08	3.1
	6.00	2.1	4.9	750	24.4	17.9	1.72	29.9	14.2	2.5	34.5	2.04	27.5	112.6	4.96	3.5
	6.00	2.1	4.9	880	24.8	19.2	1.82	31.0	13.6	2.6	35.0	1.98	28.2	106.8	5.18	3.1
	8.00	3.4	7.9	750	24.8	18.0	1.68	30.1	14.8	2.1	35.1	2.06	28.0	113.3	4.99	3.5
	8.00	3.4	7.9	880	25.2	19.4	1.77	31.2	14.2	2.1	35.6	2.00	28.7	107.5	5.22	3.0
90	4.00	1.0	2.3	750	22.7	17.1	1.90	29.0	11.9	3.2	34.5	2.04	27.6	112.6	4.96	3.7
	4.00	1.0	2.3	880	23.1	18.4	2.01	30.0	11.5	3.3	35.0	1.98	28.3	106.8	5.18	3.3
	6.00	2.1	4.9	750	23.6	17.6	1.81	29.4	13.0	2.8	35.7	2.08	28.5	114.1	5.03	3.7
	6.00	2.1	4.9	880	24.0	18.9	1.91	30.5	12.6	2.8	36.2	2.02	29.3	108.1	5.25	3.2
	8.00	3.4	7.9	750	24.0	17.8	1.76	29.6	13.6	2.3	36.3	2.11	29.0	114.8	5.04	3.6
	8.00	3.4	7.9	880	24.4	19.1	1.86	30.7	13.1	2.3	36.8	2.04	29.8	108.7	5.29	3.1
100	4.00	1.0	2.3	750	21.1	16.5	2.11	28.1	10.0	3.9	Operation not recommended					
	4.00	1.0	2.3	880	21.5	17.7	2.23	29.1	9.6	4.0						
	6.00	2.0	4.6	750	21.9	16.8	2.00	28.5	11.0	3.4						
	6.00	2.0	4.6	880	22.3	18.1	2.11	29.5	10.6	3.4						
	8.00	3.2	7.4	750	22.3	17.0	1.95	28.7	11.4	2.8						
	8.00	3.2	7.4	880	22.7	18.3	2.06	29.7	11.0	2.8						
110	4.00	0.9	2.1	750	19.7	15.9	2.34	27.4	8.4	4.7						
	4.00	0.9	2.1	880	20.0	17.1	2.47	28.4	8.1	4.8						
	6.00	1.9	4.4	750	20.3	16.2	2.21	27.7	9.2	4.0						
	6.00	1.9	4.4	880	20.7	17.4	2.34	28.7	8.8	4.1						
	8.00	3.1	7.2	750	20.6	16.4	2.16	27.8	9.5	3.3						
	8.00	3.1	7.2	880	21.0	17.6	2.28	28.8	9.2	3.4						
120	4.00	0.9	2.1	750	18.3	15.5	2.59	27.0	7.1	5.6						
	4.00	0.9	2.1	880	18.6	16.7	2.74	28.0	6.8	5.7						
	6.00	1.8	4.2	750	18.9	15.7	2.46	27.1	7.7	4.7						
	6.00	1.8	4.2	880	19.2	16.9	2.60	28.1	7.4	4.8						
	8.00	3.0	6.9	750	19.2	15.8	2.40	27.2	8.0	3.9						
	8.00	3.0	6.9	880	19.5	17.0	2.54	28.2	7.7	4.0						

Interpolation is permissible; extrapolation is not.
All entering air conditions are 80°F DB and 67°F WB in cooling, and 70°F DB in heating.
AHRI/ISO certified conditions are 80.6°F DB and 66.2°F WB in cooling and 68°F DB in heating.
Table does not reflect fan or pump power corrections for AHRI/ISO conditions.
All performance is based upon the lower voltage of dual voltage rated units.
Operation below 40°F EWT is based upon a 15% antifreeze solution.
Operation below 60°F EWT requires optional insulated water/refrigerant circuit (standard on residential models).
See performance correction tables for operating conditions other than those listed above.
See Performance Data Selection Notes for operation within the shaded areas.
"-" HWG operation is limited by a discharge temperature switch.
*Indoor Split Only.

Performance Data — 50YDS/50YPS038 Part Load With FV4005

700 CFM Nominal (Rated) Airflow Cooling, 700 CFM Nominal (Rated) Airflow Heating

Performance capacities shown in thousands of Btuh

EWT °F	GPM	WPD		Cooling - EAT 80/67°F							Heating - EAT 70°F					
		PSI	FT	Airflow CFM	TC	SC	kW	HR	EER	HWC*	HC	kW	HE	LAT	COP	HWC*
20	8.00	4.7	10.9	Operation not recommended							16.5	1.64	11.1	95.5	2.95	2.4
	8.00	4.7	10.9								16.7	1.57	11.4	92.1	3.12	2.1
30	4.00	1.2	2.8	600	27.5	17.0	0.90	30.5	30.6	-	18.1	1.66	12.8	97.9	3.20	2.4
	4.00	1.2	2.8	700	28.0	18.2	0.92	31.1	30.4	-	18.4	1.59	13.1	94.3	3.39	2.1
	6.00	2.6	6.0	600	27.8	17.0	0.85	30.6	32.7	-	18.8	1.66	13.3	99.0	3.32	2.4
	6.00	2.6	6.0	700	28.3	18.2	0.87	31.2	32.5	-	19.1	1.59	13.7	95.3	3.52	2.1
	8.00	4.5	10.4	600	28.0	17.1	0.83	30.7	33.7	-	19.1	1.67	13.7	99.5	3.35	2.4
	8.00	4.5	10.4	700	28.5	18.3	0.85	31.3	33.5	-	19.4	1.60	14.1	95.7	3.55	2.1
40	4.00	1.1	2.5	600	28.2	18.4	1.01	31.6	27.9	-	20.7	1.69	15.2	101.9	3.59	2.5
	4.00	1.1	2.5	700	28.7	19.7	1.03	32.2	27.9	-	21.0	1.62	15.6	97.8	3.80	2.2
	6.00	2.6	6.0	600	28.4	18.4	0.93	31.6	30.5	-	21.5	1.69	16.0	103.2	3.73	2.5
	6.00	2.6	6.0	700	28.9	19.7	0.95	32.2	30.4	-	21.8	1.62	16.4	98.8	3.94	2.1
	8.00	4.4	10.2	600	28.5	18.4	0.90	31.6	31.7	-	22.0	1.69	16.4	104.0	3.82	2.4
	8.00	4.4	10.2	700	29.1	19.7	0.92	32.2	31.6	-	22.3	1.62	16.8	99.5	4.03	2.1
50	4.00	1.0	2.3	600	28.0	19.0	1.14	31.8	24.6	0.8	23.4	1.72	17.7	106.1	3.99	2.6
	4.00	1.0	2.3	700	28.5	20.3	1.16	32.4	24.6	0.8	23.7	1.65	18.2	101.3	4.21	2.2
	6.00	2.5	5.8	600	28.3	19.1	1.05	31.8	27.0	0.7	24.3	1.72	18.6	107.5	4.14	2.6
	6.00	2.5	5.8	700	28.8	20.4	1.07	32.4	26.9	0.8	24.7	1.65	19.1	102.7	4.39	2.2
	8.00	4.2	9.7	600	28.4	19.1	1.01	31.9	28.1	0.7	24.9	1.73	19.1	108.4	4.22	2.5
	8.00	4.2	9.7	700	29.0	20.4	1.03	32.5	28.2	0.7	25.3	1.66	19.6	103.5	4.47	2.2
60	4.00	0.9	2.1	600	26.9	19.1	1.29	31.3	20.9	1.3	26.6	1.75	20.7	111.0	4.45	2.7
	4.00	0.9	2.1	700	27.4	20.4	1.31	31.9	20.9	1.3	27.0	1.68	21.3	105.7	4.71	2.3
	6.00	2.4	5.5	600	27.6	19.2	1.19	31.6	23.2	1.2	27.8	1.76	21.8	112.9	4.63	2.7
	6.00	2.4	5.5	700	28.1	20.5	1.21	32.2	23.2	1.2	28.2	1.69	22.4	107.3	4.89	2.3
	8.00	4.1	9.5	600	27.9	19.2	1.14	31.7	24.5	1.1	28.4	1.76	22.4	113.8	4.73	2.6
	8.00	4.1	9.5	700	28.4	20.5	1.16	32.3	24.5	1.1	28.8	1.69	23.0	108.1	4.99	2.3
70	4.00	0.8	1.8	600	25.5	18.5	1.45	30.5	17.6	1.8	29.9	1.78	23.7	116.1	4.92	2.8
	4.00	0.8	1.8	700	26.0	19.8	1.48	31.1	17.6	1.8	30.3	1.71	24.4	110.1	5.19	2.5
	6.00	2.3	5.3	600	26.3	18.8	1.35	30.9	19.5	1.7	31.2	1.79	25.1	118.1	5.11	2.8
	6.00	2.3	5.3	700	26.8	20.1	1.37	31.5	19.6	1.7	31.7	1.72	25.8	111.9	5.40	2.4
	8.00	4.0	9.2	600	26.7	19.0	1.30	31.1	20.5	1.5	31.9	1.80	25.8	119.2	5.19	2.8
	8.00	4.0	9.2	700	27.2	20.3	1.32	31.7	20.6	1.5	32.4	1.73	26.5	112.9	5.49	2.4
80	4.00	0.7	1.6	600	23.9	17.8	1.64	29.5	14.6	2.3	33.2	1.83	27.1	121.2	5.32	3.0
	4.00	0.7	1.6	700	24.4	19.0	1.67	30.1	14.6	2.3	33.7	1.75	27.8	114.6	5.64	2.6
	6.00	2.3	5.3	600	24.8	18.2	1.52	30.0	16.3	2.1	34.9	1.84	28.6	123.9	5.56	3.0
	6.00	2.3	5.3	700	25.3	19.5	1.55	30.6	16.3	2.1	35.4	1.76	29.4	116.8	5.89	2.6
	8.00	3.9	9.0	600	25.2	18.4	1.46	30.2	17.3	1.9	35.8	1.84	29.5	125.2	5.70	2.9
	8.00	3.9	9.0	700	25.7	19.7	1.49	30.8	17.2	1.9	36.3	1.76	30.3	118.0	6.04	2.6
85	4.00	0.7	1.6	600	23.2	17.5	1.74	29.0	13.3	2.5	35.0	1.84	28.7	124.0	5.57	3.2
	4.00	0.7	1.6	700	23.6	18.7	1.77	29.6	13.3	2.6	35.5	1.76	29.5	117.0	5.91	2.7
	6.00	2.2	5.1	600	23.9	17.8	1.62	29.5	14.8	2.3	36.8	1.86	30.4	126.8	5.80	3.2
	6.00	2.2	5.1	700	24.4	19.1	1.65	30.1	14.8	2.3	37.3	1.78	31.2	119.3	6.14	2.7
	8.00	3.8	8.8	600	24.4	18.0	1.56	29.7	15.6	2.1	37.8	1.86	31.3	128.3	5.96	3.0
	8.00	3.8	8.8	700	24.9	19.3	1.59	30.3	15.7	2.1	38.3	1.78	32.2	120.7	6.31	2.65
90	4.00	0.7	1.6	600	22.4	17.1	1.84	28.6	12.2	2.7	36.9	1.86	30.5	126.9	5.81	3.2
	4.00	0.7	1.6	700	22.8	18.3	1.87	29.1	12.2	2.8	37.4	1.78	31.3	119.5	6.16	2.8
	6.00	2.1	4.9	600	23.2	17.5	1.71	29.0	13.6	2.5	38.7	1.88	32.2	129.7	6.03	3.2
	6.00	2.1	4.9	700	23.6	18.7	1.74	29.6	13.6	2.5	39.3	1.80	33.1	122.0	6.40	2.8
	8.00	3.7	8.5	600	23.5	17.7	1.65	29.2	14.2	2.2	39.8	1.88	33.3	131.4	6.20	3.1
	8.00	3.7	8.5	700	24.0	18.9	1.68	29.8	14.3	2.3	40.4	1.80	34.2	123.4	6.58	2.7
100	4.00	0.6	1.4	600	20.9	16.6	2.05	27.9	10.2	3.1	Operation not recommended					
	4.00	0.6	1.4	700	21.3	17.8	2.09	28.4	10.2	3.2						
	6.00	2.1	4.9	600	21.6	16.8	1.92	28.2	11.3	2.8						
	6.00	2.1	4.9	700	22.0	18.0	1.96	28.7	11.2	2.9						
	8.00	3.6	8.3	600	22.0	17.0	1.86	28.4	11.8	2.5						
	8.00	3.6	8.3	700	22.4	18.2	1.89	28.9	11.9	2.6						
110	4.00	0.6	1.4	600	19.8	16.4	2.29	27.6	8.6	3.5						
	4.00	0.6	1.4	700	20.2	17.6	2.33	28.1	8.7	3.5						
	6.00	2.0	4.6	600	20.3	16.4	2.15	27.7	9.4	3.1						
	6.00	2.0	4.6	700	20.7	17.6	2.19	28.2	9.5	3.2						
	8.00	3.4	7.9	600	20.6	16.5	2.08	27.7	9.9	2.8						
	8.00	3.4	7.9	700	21.0	17.7	2.12	28.2	9.9	2.9						
120	4.00	0.5	1.2	600	19.0	16.2	2.51	27.7	7.6	3.8						
	4.00	0.5	1.2	700	19.4	17.3	2.56	28.2	7.6	3.9						
	6.00	1.9	4.4	600	19.4	16.4	2.39	27.7	8.1	3.4						
	6.00	1.9	4.4	700	19.8	17.6	2.43	28.2	8.1	3.5						
	8.00	3.3	7.6	600	19.6	16.5	2.35	27.7	8.3	3.1						
	8.00	3.3	7.6	700	20.0	17.7	2.39	28.2	8.4	3.1						

Interpolation is permissible; extrapolation is not.
All entering air conditions are 80°F DB and 67°F WB in cooling, and 70°F DB in heating.
AHRI/ISO certified conditions are 80.6°F DB and 66.2°F WB in cooling and 68°F DB in heating.
Table does not reflect fan or pump power corrections for AHRI/ISO conditions.
All performance is based upon the lower voltage of dual voltage rated units.
Operation below 40°F EWT is based upon a 15% antifreeze solution.
Operation below 60°F EWT requires optional insulated water/refrigerant circuit (standard on residential models).
See performance correction tables for operating conditions other than those listed above.
See Performance Data Selection Notes for operation within the shaded areas.
"-" HWG operation is limited by a discharge temperature switch.
*Indoor Split Only.

Performance Data — 50YDS/50YPS038 Full Load With FV4005

1200 CFM Nominal (Rated) Airflow Cooling, 1200 CFM Nominal (Rated) Airflow Heating

Performance capacities shown in thousands of Btuh

EWT °F	GPM	WPD		Cooling - EAT 80/67°F							Heating - EAT 70°F					
		PSI	FT	Airflow CFM	TC	SC	kW	HR	EER	HWC*	HC	kW	HE	LAT	COP	HWC*
20	9.00	5.9	13.6	Operation not recommended							23.3	2.25	15.9	91.6	3.04	2.9
	9.00	5.9	13.6								23.6	2.18	16.3	88.2	3.17	2.5
30	4.50	1.7	3.9	1000	41.8	21.7	1.66	46.7	25.2	-	25.7	2.32	18.0	93.8	3.25	3.0
	4.50	1.7	3.9	1200	42.5	23.3	1.75	48.4	24.3	-	26.1	2.25	18.5	90.1	3.40	2.6
	6.75	3.3	7.6	1000	41.9	21.7	1.54	46.5	27.2	-	26.9	2.34	19.1	94.9	3.37	3.0
	6.75	3.3	7.6	1200	42.6	23.3	1.63	48.2	26.1	-	27.3	2.27	19.6	91.1	3.52	2.6
	9.00	5.7	13.2	1000	42.1	21.7	1.50	46.4	28.1	-	27.6	2.36	19.7	95.6	3.43	2.9
	9.00	5.7	13.2	1200	42.8	23.3	1.58	48.1	27.1	-	28.0	2.29	20.2	91.6	3.58	2.5
40	4.50	1.5	3.5	1000	41.0	23.0	1.81	46.5	22.7	-	29.9	2.44	21.7	97.7	3.59	3.1
	4.50	1.5	3.5	1200	41.7	24.7	1.91	48.2	21.8	-	30.3	2.36	22.3	93.4	3.76	2.7
	6.75	3.2	7.4	1000	41.6	23.1	1.69	46.7	24.6	-	31.2	2.47	23.0	98.9	3.70	3.0
	6.75	3.2	7.4	1200	42.3	24.8	1.79	48.4	23.6	-	31.7	2.39	23.6	94.5	3.89	2.6
	9.00	5.4	12.5	1000	41.8	23.1	1.64	46.7	25.5	-	32.0	2.49	23.8	99.6	3.77	3.0
	9.00	5.4	12.5	1200	42.5	24.8	1.73	48.4	24.6	-	32.5	2.41	24.4	95.1	3.95	2.6
50	4.50	1.3	3.0	1000	39.8	23.9	1.98	45.9	20.1	1.4	34.1	2.55	25.5	101.6	3.92	3.2
	4.50	1.3	3.0	1200	40.5	25.7	2.09	47.6	19.4	1.4	34.6	2.47	26.2	96.7	4.11	2.8
	6.75	3.1	7.2	1000	40.7	24.2	1.85	46.4	22.0	1.2	35.9	2.60	27.1	103.2	4.05	3.2
	6.75	3.1	7.2	1200	41.4	26.0	1.96	48.1	21.1	1.2	36.4	2.52	27.8	98.1	4.23	2.8
	9.00	5.2	12.0	1000	41.1	24.3	1.79	46.5	23.0	1.0	36.8	2.62	28.0	104.1	4.12	3.1
	9.00	5.2	12.0	1200	41.8	26.1	1.89	48.2	22.1	1.0	37.3	2.54	28.7	98.8	4.30	2.7
60	4.50	1.2	2.8	1000	38.3	24.6	2.16	45.1	17.7	1.9	38.6	2.69	29.5	105.7	4.21	3.5
	4.50	1.2	2.8	1200	39.0	26.5	2.28	46.7	17.1	1.9	39.2	2.61	30.3	100.2	4.40	3.0
	6.75	3.0	6.9	1000	39.4	25.1	2.03	45.7	19.4	1.6	40.7	2.75	31.4	107.7	4.34	3.4
	6.75	3.0	6.9	1200	40.1	27.0	2.14	47.4	18.7	1.7	41.3	2.66	32.2	101.9	4.55	3.0
	9.00	5.0	11.6	1000	39.9	25.3	1.96	46.0	20.4	1.4	41.8	2.79	32.3	108.7	4.39	3.4
	9.00	5.0	11.6	1200	40.6	27.2	2.07	47.7	19.6	1.4	42.4	2.70	33.2	102.7	4.60	2.9
70	4.50	1.1	2.5	1000	36.5	25.2	2.36	44.1	15.5	2.5	43.4	2.84	33.7	110.2	4.48	3.8
	4.50	1.1	2.5	1200	37.2	27.1	2.49	45.7	14.9	2.6	44.0	2.75	34.6	104.0	4.69	3.3
	6.75	2.9	6.7	1000	37.8	25.8	2.21	44.8	17.1	2.2	45.7	2.92	35.9	112.3	4.59	3.7
	6.75	2.9	6.7	1200	38.5	27.7	2.34	46.4	16.5	2.2	46.4	2.83	36.8	105.8	4.81	3.2
	9.00	4.8	11.1	1000	38.4	25.9	2.14	45.2	17.9	1.8	47.1	2.96	37.0	113.6	4.66	3.7
	9.00	4.8	11.1	1200	39.1	27.9	2.26	46.8	17.3	1.9	47.8	2.87	38.0	106.9	4.88	3.2
80	4.50	1.0	2.3	1000	34.7	25.5	2.58	43.0	13.4	3.3	48.4	3.01	38.1	114.8	4.71	4.2
	4.50	1.0	2.3	1200	35.3	27.4	2.73	44.6	12.9	3.3	49.1	2.92	39.1	107.9	4.93	3.6
	6.75	2.8	6.5	1000	36.0	26.1	2.42	43.7	14.9	2.8	51.1	3.11	40.6	117.3	4.82	4.1
	6.75	2.8	6.5	1200	36.6	28.1	2.56	45.3	14.3	2.8	51.9	3.01	41.7	110.0	5.05	3.6
	9.00	4.5	10.4	1000	36.6	26.4	2.35	44.1	15.6	2.3	52.7	3.16	42.0	118.8	4.89	4.0
	9.00	4.5	10.4	1200	37.3	28.4	2.48	45.7	15.0	2.4	53.5	3.06	43.1	111.3	5.12	3.5
85	4.50	1.0	2.3	1000	33.7	25.6	2.73	42.6	12.3	3.7	51.0	3.11	40.4	117.2	4.81	4.4
	4.50	1.0	2.3	1200	34.3	27.5	2.88	44.1	11.9	3.8	51.8	3.01	41.5	110.0	5.04	3.6
	6.75	2.8	6.5	1000	35.0	26.2	2.55	43.2	13.7	3.2	54.0	3.21	43.1	120.0	4.93	4.4
	6.75	2.8	6.5	1200	35.6	28.2	2.69	44.8	13.2	3.2	54.8	3.11	44.2	112.3	5.16	3.6
	9.00	4.5	10.4	1000	35.7	26.6	2.46	43.5	14.5	2.6	55.8	3.27	44.5	121.7	5.00	4.5
	9.00	4.5	10.4	1200	36.3	28.6	2.60	45.1	14.0	2.4	56.6	3.17	45.7	113.7	5.23	3.7
90	4.50	0.9	2.1	1000	32.7	25.7	2.86	42.1	11.4	4.1	53.6	3.20	42.8	119.6	4.91	4.6
	4.50	0.9	2.1	1200	33.3	27.6	3.02	43.6	11.0	4.2	54.4	3.10	43.9	112.0	5.14	4.0
	6.75	2.7	6.2	1000	34.0	26.4	2.67	42.7	12.7	3.5	57.0	3.32	45.6	122.8	5.03	4.6
	6.75	2.7	6.2	1200	34.6	28.4	2.82	44.2	12.3	3.6	57.8	3.22	46.8	114.6	5.26	4.0
	9.00	4.4	10.2	1000	34.7	26.7	2.58	43.0	13.4	2.9	58.7	3.38	47.2	124.4	5.09	4.5
	9.00	4.4	10.2	1200	35.3	28.7	2.73	44.6	12.9	3.0	59.6	3.28	48.4	116.0	5.33	3.9
100	4.50	0.8	1.8	1000	30.7	25.8	3.16	41.2	9.7	5.0	Operation not recommended					
	4.50	0.8	1.8	1200	31.2	27.7	3.34	42.7	9.3	5.1						
	6.75	2.6	6.0	1000	31.9	26.5	2.95	41.7	10.8	4.3						
	6.75	2.6	6.0	1200	32.5	28.5	3.12	43.2	10.4	4.3						
	9.00	4.2	9.7	1000	32.6	26.8	2.86	42.0	11.4	3.5						
	9.00	4.2	9.7	1200	33.2	28.8	3.02	43.5	11.0	3.6						
110	4.50	0.8	1.8	1000	28.8	25.9	3.52	40.5	8.2	6.0						
	4.50	0.8	1.8	1200	29.3	27.8	3.72	42.0	7.9	6.1						
	6.75	2.5	5.8	1000	30.0	26.5	3.28	40.9	9.1	5.1						
	6.75	2.5	5.8	1200	30.5	28.5	3.47	42.4	8.8	5.2						
	9.00	4.0	9.2	1000	30.6	26.9	3.17	41.1	9.7	4.2						
	9.00	4.0	9.2	1200	31.1	28.9	3.35	42.6	9.3	4.3						
120	4.50	0.7	1.6	1000	27.0	25.9	3.94	40.3	6.9	7.2						
	4.50	0.7	1.6	1200	27.5	27.9	4.16	41.8	6.6	7.3						
	6.75	2.5	5.8	1000	28.1	26.5	3.66	40.4	7.7	6.1						
	6.75	2.5	5.8	1200	28.6	28.5	3.87	41.9	7.4	6.2						
	9.00	3.8	8.8	1000	28.7	26.9	3.54	40.5	8.1	5.0						
	9.00	3.8	8.8	1200	29.2	28.9	3.74	42.0	7.8	5.1						

Interpolation is permissible; extrapolation is not.
All entering air conditions are 80°F DB and 67°F WB in cooling, and 70°F DB in heating.
AHRI/ISO certified conditions are 80.6°F DB and 66.2°F WB in cooling and 68°F DB in heating.
Table does not reflect fan or pump power corrections for AHRI/ISO conditions.
All performance is based upon the lower voltage of dual voltage rated units.
Operation below 40°F EWT is based upon a 15% antifreeze solution.
Operation below 60°F EWT requires optional insulated water/refrigerant circuit (standard on residential models).
See performance correction tables for operating conditions other than those listed above.
See Performance Data Selection Notes for operation within the shaded areas.
"-" HWG operation is limited by a discharge temperature switch.
*Indoor Split Only.

Performance Data — 50YDS/50YPS049 Part Load With FV4006

1000 CFM Nominal (Rated) Airflow Cooling, 1000 CFM Nominal (Rated) Airflow Heating

Performance capacities shown in thousands of Btuh

EWT °F	GPM	WPD		Cooling - EAT 80/67°F							Heating - EAT 70°F					
		PSI	FT	Airflow CFM	TC	SC	kW	HR	EER	HWC*	HC	kW	HE	LAT	COP	HWC*
20	11.00	4.0	9.2	Operation not recommended							22.3	2.16	15.3	94.3	3.03	3.3
	11.00	4.0	9.2								22.6	2.07	15.7	90.9	3.20	2.8
30	5.50	1.1	2.5	850	37.1	22.5	1.19	41.1	31.2	-	24.5	2.23	17.1	96.7	3.22	3.4
	5.50	1.1	2.5	1000	37.8	24.1	1.21	41.9	31.2	-	24.9	2.14	17.6	93.1	3.41	2.9
	8.25	2.3	5.3	850	37.3	22.5	1.12	41.1	33.3	-	25.3	2.24	18.0	97.6	3.31	3.3
	8.25	2.3	5.3	1000	38.0	24.1	1.14	41.9	33.3	-	25.7	2.15	18.5	93.8	3.50	2.9
	11.00	3.9	9.0	850	37.5	22.5	1.08	41.2	34.7	-	25.8	2.25	18.5	98.1	3.36	3.3
	11.00	3.9	9.0	1000	38.2	24.1	1.10	42.0	34.7	-	26.2	2.16	19.0	94.3	3.55	2.9
40	5.50	1.0	2.3	850	38.8	24.6	1.35	43.4	28.7	-	28.1	2.32	20.4	100.6	3.55	3.5
	5.50	1.0	2.3	1000	39.6	26.3	1.37	44.2	28.9	-	28.5	2.22	21.0	96.4	3.76	3.0
	8.25	2.2	5.1	850	39.1	24.7	1.26	43.5	31.0	-	29.4	2.33	21.6	102.0	3.70	3.4
	8.25	2.2	5.1	1000	39.9	26.4	1.28	44.3	31.2	-	29.8	2.23	22.2	97.6	3.92	3.0
	11.00	3.7	8.5	850	39.2	24.7	1.24	43.5	31.6	-	30.0	2.34	22.3	102.7	3.76	3.4
	11.00	3.7	8.5	1000	40.0	26.4	1.26	44.3	31.7	-	30.4	2.24	22.9	98.1	3.98	2.9
50	5.50	0.9	2.1	850	38.4	25.1	1.47	43.4	26.1	0.9	32.1	2.40	24.1	105.0	3.92	3.6
	5.50	0.9	2.1	1000	39.1	26.9	1.50	44.2	26.1	0.9	32.6	2.30	24.8	100.2	4.15	3.1
	8.25	2.1	4.9	850	38.7	25.2	1.39	43.5	27.8	0.8	33.6	2.41	25.6	106.6	4.09	3.5
	8.25	2.1	4.9	1000	39.5	27.0	1.42	44.3	27.8	0.9	34.1	2.31	26.3	101.6	4.33	3.1
	11.00	3.6	8.3	850	38.8	25.2	1.38	43.6	28.1	0.8	34.4	2.42	26.4	107.5	4.17	3.5
	11.00	3.6	8.3	1000	39.6	27.0	1.41	44.4	28.1	0.8	34.9	2.32	27.1	102.3	4.41	3.0
60	5.50	0.8	1.8	850	37.2	25.4	1.70	43.0	21.9	1.6	36.3	2.48	27.9	109.5	4.29	3.7
	5.50	0.8	1.8	1000	37.9	27.2	1.73	43.8	21.9	1.6	36.8	2.38	28.7	104.1	4.53	3.3
	8.25	2.0	4.6	850	37.9	25.5	1.59	43.3	23.8	1.4	38.0	2.49	29.7	111.4	4.47	3.7
	8.25	2.0	4.6	1000	38.6	27.3	1.62	44.1	23.8	1.5	38.6	2.39	30.5	105.7	4.73	3.2
	11.00	3.5	8.1	850	38.1	25.6	1.54	43.4	24.7	1.3	39.0	2.50	30.6	112.5	4.57	3.7
	11.00	3.5	8.1	1000	38.8	27.4	1.57	44.2	24.7	1.3	39.6	2.40	31.4	106.7	4.84	3.2
70	5.50	0.8	1.8	850	35.1	24.9	1.90	41.7	18.5	2.2	40.4	2.57	31.7	114.0	4.61	3.9
	5.50	0.8	1.8	1000	35.8	26.7	1.94	42.5	18.5	2.2	41.0	2.46	32.6	108.0	4.88	3.4
	8.25	2.0	4.6	850	36.1	25.2	1.79	42.3	20.2	2.0	42.4	2.59	33.7	116.2	4.80	3.9
	8.25	2.0	4.6	1000	36.8	27.0	1.82	43.1	20.2	2.0	43.0	2.48	34.6	109.8	5.08	3.4
	11.00	3.3	7.6	850	36.6	25.4	1.73	42.5	21.2	1.8	43.6	2.60	34.7	117.5	4.91	3.9
	11.00	3.3	7.6	1000	37.3	27.2	1.76	43.3	21.2	1.8	44.2	2.49	35.7	110.9	5.20	3.4
80	5.50	0.7	1.6	850	32.7	24.1	2.14	39.9	15.3	2.8	44.5	2.66	35.4	118.5	4.90	4.2
	5.50	0.7	1.6	1000	33.3	25.8	2.18	40.7	15.3	2.8	45.1	2.55	36.4	111.8	5.18	3.6
	8.25	1.9	4.4	850	33.8	24.6	2.01	40.7	16.8	2.5	46.6	2.69	37.5	120.8	5.08	4.1
	8.25	1.9	4.4	1000	34.5	26.3	2.05	41.5	16.8	2.6	47.3	2.58	38.5	113.8	5.37	3.6
	11.00	3.2	7.4	850	34.4	24.8	1.94	41.0	17.7	2.3	47.7	2.70	38.5	122.0	5.18	4.1
	11.00	3.2	7.4	1000	35.1	26.5	1.98	41.8	17.7	2.3	48.4	2.59	39.6	114.8	5.48	3.6
85	5.50	0.7	1.6	850	31.4	23.6	2.27	39.1	13.8	3.1	46.3	2.71	37.1	120.4	5.01	4.4
	5.50	0.7	1.6	1000	32.0	25.3	2.31	39.8	13.9	3.1	47.0	2.60	38.1	113.5	5.30	3.8
	8.25	1.9	4.4	850	32.6	24.1	2.13	39.8	15.3	2.8	48.5	2.74	39.1	122.8	5.19	4.3
	8.25	1.9	4.4	1000	33.2	25.8	2.17	40.6	15.3	2.9	49.2	2.63	40.2	115.6	5.48	3.8
	11.00	3.1	7.2	850	33.2	24.3	2.07	40.1	16.0	2.5	49.6	2.76	40.2	124.0	5.27	4.3
	11.00	3.1	7.2	1000	33.8	26.0	2.11	40.9	16.0	2.6	50.3	2.65	41.3	116.6	5.56	3.7
90	5.50	0.7	1.6	850	30.0	23.2	2.40	38.2	12.5	3.3	48.2	2.76	38.8	122.5	5.12	4.5
	5.50	0.7	1.6	1000	30.6	24.8	2.44	38.9	12.5	3.4	48.9	2.65	39.9	115.3	5.41	3.9
	8.25	1.8	4.2	850	31.2	23.6	2.26	39.0	13.8	3.0	50.4	2.81	40.8	124.9	5.26	4.4
	8.25	1.8	4.2	1000	31.8	25.3	2.30	39.7	13.8	3.1	51.1	2.69	41.9	117.3	5.57	3.9
	11.00	3.1	7.2	850	31.8	23.9	2.19	39.3	14.5	2.7	51.5	2.83	41.9	126.1	5.33	4.4
	11.00	3.1	7.2	1000	32.4	25.6	2.23	40.1	14.5	2.8	52.2	2.71	43.0	118.3	5.65	3.8
100	5.50	0.7	1.6	850	27.4	22.2	2.69	36.6	10.2	3.8	Operation not recommended					
	5.50	0.7	1.6	1000	27.9	23.8	2.74	37.3	10.2	3.9						
	8.25	1.8	4.2	850	28.5	22.7	2.53	37.2	11.3	3.5						
	8.25	1.8	4.2	1000	29.1	24.3	2.58	37.9	11.3	3.5						
	11.00	3.0	6.9	850	29.1	22.9	2.46	37.6	11.8	3.1						
	11.00	3.0	6.9	1000	29.7	24.5	2.51	38.3	11.8	3.2						
110	5.50	0.6	1.4	850	25.0	21.5	3.01	35.3	8.3	4.3						
	5.50	0.6	1.4	1000	25.5	23.0	3.07	36.0	8.3	4.3						
	8.25	1.7	3.9	850	26.0	21.9	2.86	35.7	9.1	3.9						
	8.25	1.7	3.9	1000	26.5	23.4	2.91	36.4	9.1	3.9						
	11.00	2.8	6.5	850	26.5	22.1	2.77	36.0	9.6	3.5						
	11.00	2.8	6.5	1000	27.0	23.6	2.82	36.7	9.6	3.5						
120	5.50	0.6	1.4	850	23.2	21.3	3.40	34.7	6.8	4.7						
	5.50	0.6	1.4	1000	23.6	22.8	3.46	35.4	6.8	4.8						
	8.25	1.7	3.9	850	23.8	21.3	3.21	34.8	7.4	4.2						
	8.25	1.7	3.9	1000	24.3	22.8	3.27	35.5	7.4	4.3						
	11.00	2.7	6.2	850	24.2	21.4	3.12	34.9	7.8	3.8						
	11.00	2.7	6.2	1000	24.7	22.9	3.18	35.6	7.8	3.9						

Interpolation is permissible; extrapolation is not.
All entering air conditions are 80°F DB and 67°F WB in cooling, and 70°F DB in heating.
AHRI/ISO certified conditions are 80.6°F DB and 66.2°F WB in cooling and 68°F DB in heating.
Table does not reflect fan or pump power corrections for AHRI/ISO conditions.
All performance is based upon the lower voltage of dual voltage rated units.
Operation below 40°F EWT is based upon a 15% antifreeze solution.
Operation below 60°F EWT requires optional insulated water/refrigerant circuit (standard on residential models).
See performance correction tables for operating conditions other than those listed above.
See Performance Data Selection Notes for operation within the shaded areas.
"-" HWG operation is limited by a discharge temperature switch.
*Indoor Split Only.

Performance Data — 50YDS/50YPS049 Full Load With FV4006

1650 CFM Nominal (Rated) Airflow Cooling, 1650 CFM Nominal (Rated) Airflow Heating

Performance capacities shown in thousands of Btuh

EWT °F	GPM	WPD		Cooling - EAT 80/67°F							Heating - EAT 70°F					
		PSI	FT	Airflow CFM	TC	SC	kW	HR	EER	HWC*	HC	kW	HE	LAT	COP	HWC*
20	12.00	4.8	11.1	Operation not recommended							31.8	2.89	22.2	91.0	3.22	3.8
	12.00	4.8	11.1								32.3	2.80	22.8	88.1	3.38	3.3
30	6.00	1.3	3.0	1400	55.8	35.9	2.23	62.5	25.0	-	34.7	3.00	24.7	92.9	3.39	4.0
	6.00	1.3	3.0	1650	56.8	38.6	2.36	64.8	24.1	-	35.2	2.91	25.4	89.8	3.55	3.5
	9.00	2.7	6.2	1400	56.2	36.0	2.11	62.5	26.6	-	36.3	3.04	26.1	94.0	3.50	3.9
	9.00	2.7	6.2	1650	57.2	38.7	2.23	64.8	25.7	-	36.8	2.95	26.8	90.7	3.66	3.4
	12.00	4.6	10.6	1400	56.6	36.0	2.03	62.6	27.9	-	37.2	3.07	26.9	94.6	3.55	3.9
	12.00	4.6	10.6	1650	57.6	38.7	2.15	64.9	26.8	-	37.7	2.97	27.6	91.2	3.72	3.3
40	6.00	1.1	2.5	1400	55.5	37.2	2.43	63.0	22.8	-	39.8	3.17	29.2	96.3	3.68	4.1
	6.00	1.1	2.5	1650	56.5	40.0	2.57	65.3	22.0	-	40.4	3.07	30.0	92.7	3.86	3.6
	9.00	2.6	6.0	1400	56.1	37.2	2.30	63.0	24.4	-	41.8	3.22	31.0	97.6	3.80	4.0
	9.00	2.6	6.0	1650	57.1	40.0	2.43	65.3	23.5	-	42.4	3.12	31.8	93.8	3.98	3.5
	12.00	4.4	10.2	1400	56.3	37.3	2.23	63.0	25.2	-	42.9	3.25	32.0	98.4	3.87	4.0
	12.00	4.4	10.2	1650	57.3	40.1	2.36	65.3	24.3	-	43.5	3.15	32.8	94.4	4.05	3.4
50	6.00	1.1	2.5	1400	54.2	37.8	2.63	62.4	20.6	1.9	45.1	3.33	33.9	99.8	3.97	4.3
	6.00	1.1	2.5	1650	55.2	40.6	2.78	64.7	19.9	2.0	45.8	3.23	34.8	95.7	4.16	3.7
	9.00	2.5	5.8	1400	55.3	37.9	2.49	63.0	22.2	1.7	47.5	3.40	36.0	101.4	4.09	4.2
	9.00	2.5	5.8	1650	56.3	40.8	2.63	65.3	21.4	1.7	48.2	3.29	37.0	97.0	4.29	3.7
	12.00	4.2	9.7	1400	55.7	37.9	2.42	63.1	23.0	1.4	48.9	3.44	37.3	102.3	4.17	4.2
	12.00	4.2	9.7	1650	56.7	40.8	2.56	65.4	22.1	1.4	49.6	3.33	38.3	97.8	4.37	3.6
60	6.00	1.0	2.3	1400	52.2	37.3	2.84	61.2	18.4	2.8	50.9	3.51	39.0	103.7	4.25	4.6
	6.00	1.0	2.3	1650	53.1	40.1	3.00	63.4	17.7	2.8	51.6	3.40	40.0	99.0	4.45	4.0
	9.00	2.4	5.5	1400	53.7	37.8	2.69	62.1	20.0	2.4	53.7	3.59	41.5	105.5	4.38	4.5
	9.00	2.4	5.5	1650	54.7	40.7	2.84	64.4	19.3	2.4	54.5	3.48	42.6	100.6	4.59	3.9
	12.00	4.0	9.2	1400	54.3	38.0	2.62	62.5	20.7	2.0	55.3	3.63	43.0	106.6	4.46	4.5
	12.00	4.0	9.2	1650	55.3	40.9	2.77	64.8	20.0	2.0	56.1	3.52	44.1	101.5	4.67	3.9
70	6.00	0.9	2.1	1400	49.7	36.5	3.08	59.4	16.1	3.8	56.7	3.70	44.1	107.5	4.49	5.0
	6.00	0.9	2.1	1650	50.6	39.3	3.25	61.6	15.6	3.8	57.5	3.59	45.3	102.3	4.69	4.4
	9.00	2.3	5.3	1400	51.5	37.3	2.91	60.7	17.7	3.2	60.0	3.80	47.1	109.7	4.63	5.0
	9.00	2.3	5.3	1650	52.4	40.1	3.08	62.9	17.0	3.3	60.9	3.68	48.3	104.2	4.85	4.3
	12.00	3.8	8.8	1400	52.4	37.7	2.83	61.2	18.5	2.7	61.8	3.86	48.7	110.9	4.69	4.9
	12.00	3.8	8.8	1650	53.3	40.5	2.99	63.4	17.8	2.7	62.7	3.74	50.0	105.2	4.91	4.2
80	6.00	0.9	2.1	1400	46.9	35.5	3.34	57.6	14.0	4.9	62.7	3.91	49.3	111.5	4.70	5.6
	6.00	0.9	2.1	1650	47.7	38.2	3.53	59.7	13.5	5.0	63.6	3.79	50.6	105.7	4.92	4.8
	9.00	2.3	5.3	1400	48.7	36.4	3.16	58.9	15.4	4.2	66.4	4.02	52.6	113.9	4.84	5.5
	9.00	2.3	5.3	1650	49.6	39.1	3.34	61.0	14.9	4.3	67.4	3.90	54.0	107.8	5.07	4.8
	12.00	3.6	8.3	1400	49.7	36.8	3.07	59.5	16.2	3.5	68.5	4.10	54.5	115.3	4.90	5.4
	12.00	3.6	8.3	1650	50.6	39.6	3.24	61.7	15.6	3.5	69.5	3.97	55.9	109.0	5.13	4.7
85	6.00	0.9	2.1	1400	45.3	34.8	3.49	56.6	13.0	5.6	65.6	4.02	51.9	113.4	4.78	5.9
	6.00	0.9	2.1	1650	46.1	37.4	3.69	58.7	12.5	6.3	66.6	3.90	53.3	107.4	5.00	5.1
	9.00	2.2	5.1	1400	47.3	35.6	3.30	57.9	14.3	4.8	69.6	4.16	55.4	116.0	4.90	5.8
	9.00	2.2	5.1	1650	48.1	38.3	3.49	60.0	13.8	4.9	70.6	4.03	56.9	109.6	5.13	5.1
	12.00	3.6	8.3	1400	48.2	36.1	3.21	58.6	15.0	3.9	71.7	4.23	57.3	117.4	4.97	5.4
	12.00	3.6	8.3	1650	49.1	38.8	3.39	60.7	14.5	4.0	72.8	4.10	58.8	110.9	5.20	5.0
90	6.00	0.9	2.1	1400	43.7	34.0	3.64	55.7	12.0	6.2	68.7	4.14	54.6	115.4	4.86	6.2
	6.00	0.9	2.1	1650	44.5	36.6	3.85	57.7	11.6	6.3	69.7	4.01	56.0	109.1	5.09	5.4
	9.00	2.2	5.1	1400	45.8	34.9	3.44	56.9	13.3	5.3	72.8	4.28	58.2	118.1	4.99	6.1
	9.00	2.2	5.1	1650	46.6	37.5	3.63	59.0	12.8	5.4	73.9	4.15	59.7	111.5	5.22	5.3
	12.00	3.5	8.1	1400	46.8	35.3	3.34	57.6	14.0	4.3	75.1	4.37	60.1	119.7	5.04	6.0
	12.00	3.5	8.1	1650	47.6	38.0	3.53	59.7	13.5	4.4	76.2	4.23	61.7	112.8	5.28	5.2
100	6.00	0.8	1.8	1400	40.7	32.8	3.99	53.8	10.2	7.6	Operation not recommended					
	6.00	0.8	1.8	1650	41.4	35.3	4.22	55.8	9.8	7.8						
	9.00	2.1	4.9	1400	42.6	33.6	3.77	54.9	11.3	6.5						
	9.00	2.1	4.9	1650	43.4	36.1	3.98	56.9	10.9	6.6						
	12.00	3.3	7.6	1400	43.6	33.9	3.66	55.6	11.9	5.3						
	12.00	3.3	7.6	1650	44.4	36.5	3.87	57.6	11.5	5.4						
110	6.00	0.8	1.8	1400	37.6	31.8	4.40	52.3	8.5	9.2						
	6.00	0.8	1.8	1650	38.3	34.2	4.65	54.2	8.2	9.4						
	9.00	2.0	4.6	1400	39.4	32.4	4.15	53.2	9.5	7.8						
	9.00	2.0	4.6	1650	40.1	34.8	4.38	55.1	9.2	7.9						
	12.00	3.2	7.4	1400	40.4	32.7	4.02	53.7	10.0	6.4						
	12.00	3.2	7.4	1650	41.1	35.2	4.25	55.6	9.7	6.5						
120	6.00	0.8	1.8	1400	34.8	31.2	4.88	51.1	7.1	10.9						
	6.00	0.8	1.8	1650	35.4	33.5	5.16	53.0	6.9	11.1						
	9.00	2.0	4.6	1400	36.4	31.4	4.59	51.7	7.9	9.3						
	9.00	2.0	4.6	1650	37.0	33.8	4.85	53.6	7.6	9.4						
	12.00	3.0	6.9	1400	37.2	31.7	4.46	52.1	8.3	7.6						
	12.00	3.0	6.9	1650	37.9	34.1	4.71	54.0	8.0	7.7						

Interpolation is permissible; extrapolation is not.
All entering air conditions are 80°F DB and 67°F WB in cooling, and 70°F DB in heating.
AHRI/ISO certified conditions are 80.6°F DB and 66.2°F WB in cooling and 68°F DB in heating.
Table does not reflect fan or pump power corrections for AHRI/ISO conditions.
All performance is based upon the lower voltage of dual voltage rated units.
Operation below 40°F EWT is based upon a 15% antifreeze solution.
Operation below 60°F EWT requires optional insulated water/refrigerant circuit (standard on residential models).
See performance correction tables for operating conditions other than those listed above.
See Performance Data Selection Notes for operation within the shaded areas.
"-" HWG operation is limited by a discharge temperature switch.
*Indoor Split Only.

Performance Data — 50YDS/50YPS064 Part Load With FV4006

1200 CFM Nominal (Rated) Airflow Cooling, 1200 CFM Nominal (Rated) Airflow Heating

Performance capacities shown in thousands of Btuh

EWT °F	GPM	WPD		Cooling - EAT 80/67°F							Heating - EAT 70°F					
		PSI	FT	Airflow CFM	TC	SC	kW	HR	EER	HWC*	HC	kW	HE	LAT	COP	HWC*
20	14.00	4.1	9.5	Operation not recommended							28.6	2.93	19.0	96.5	2.86	3.4
	14.00	4.1	9.5								29.0	2.81	19.5	92.4	3.02	3.0
30	7.00	0.5	1.2	1000	42.0	26.0	1.64	47.5	25.6	-	31.6	3.01	21.7	99.3	3.08	3.5
	7.00	0.5	1.2	1200	42.8	27.8	1.67	48.4	25.6	-	32.1	2.89	22.3	94.8	3.26	3.1
	10.50	1.9	4.4	1000	42.8	26.3	1.59	48.2	26.9	-	32.6	3.01	22.7	100.2	3.17	3.5
	10.50	1.9	4.4	1200	43.6	28.1	1.62	49.1	26.9	-	33.1	2.89	23.3	95.5	3.36	3.0
	14.00	3.9	9.0	1000	44.1	26.9	1.57	49.5	28.1	-	33.1	3.02	23.3	100.6	3.21	3.4
	14.00	3.9	9.0	1200	45.0	28.8	1.60	50.4	28.1	-	33.6	2.90	23.9	95.9	3.40	3.0
40	7.00	0.4	0.9	1000	44.7	28.2	1.79	50.8	25.0	-	36.1	3.10	25.9	103.4	3.41	3.6
	7.00	0.4	0.9	1200	45.6	30.2	1.82	51.8	25.1	-	36.6	2.97	26.6	98.2	3.61	3.1
	10.50	1.8	4.2	1000	45.0	28.2	1.69	50.8	26.6	-	37.4	3.11	27.2	104.6	3.52	3.6
	10.50	1.8	4.2	1200	45.9	30.2	1.72	51.8	26.7	-	37.9	2.98	27.9	99.2	3.73	3.1
	14.00	3.7	8.5	1000	45.3	28.3	1.66	51.0	27.3	-	38.0	3.11	27.7	105.2	3.58	3.5
	14.00	3.7	8.5	1200	46.2	30.3	1.69	52.0	27.3	-	38.6	2.98	28.5	99.8	3.80	3.1
50	7.00	0.3	0.7	1000	45.1	29.1	1.98	51.9	22.8	1.0	40.9	3.20	30.3	107.9	3.75	3.7
	7.00	0.3	0.7	1200	46.0	31.1	2.02	52.9	22.8	1.0	41.5	3.07	31.1	102.0	3.96	3.2
	10.50	1.8	4.2	1000	45.6	29.1	1.86	51.9	24.5	0.9	42.5	3.21	31.8	109.4	3.88	3.7
	10.50	1.8	4.2	1200	46.5	31.1	1.89	52.9	24.6	0.9	43.1	3.08	32.7	103.3	4.10	3.2
	14.00	3.6	8.3	1000	45.7	29.1	1.81	51.9	25.2	0.8	43.3	3.21	32.6	110.1	3.95	3.6
	14.00	3.6	8.3	1200	46.6	31.1	1.84	52.9	25.3	0.8	43.9	3.08	33.5	103.9	4.18	3.2
60	7.00	0.3	0.7	1000	43.9	28.7	2.23	51.4	19.7	1.7	46.2	3.31	35.2	112.8	4.09	3.9
	7.00	0.3	0.7	1200	44.7	30.7	2.27	52.4	19.7	1.7	46.9	3.17	36.2	106.2	4.34	3.4
	10.50	1.7	3.9	1000	44.8	29.1	2.08	51.9	21.5	1.5	48.1	3.32	37.0	114.5	4.25	3.8
	10.50	1.7	3.9	1200	45.7	31.1	2.12	52.9	21.6	1.6	48.8	3.18	38.0	107.7	4.50	3.3
	14.00	3.4	7.9	1000	45.2	29.2	2.01	52.1	22.5	1.4	49.1	3.33	37.9	115.5	4.32	3.8
	14.00	3.4	7.9	1200	46.1	31.3	2.05	53.1	22.5	1.4	49.8	3.19	38.9	108.4	4.58	3.3
70	7.00	0.2	0.5	1000	41.8	27.9	2.52	50.4	16.6	2.3	51.7	3.42	40.3	117.9	4.43	4.1
	7.00	0.2	0.5	1200	42.6	29.9	2.57	51.4	16.6	2.4	52.5	3.28	41.4	110.5	4.69	3.6
	10.50	1.7	3.9	1000	43.2	28.6	2.35	51.1	18.4	2.1	53.8	3.44	42.2	119.8	4.58	4.1
	10.50	1.7	3.9	1200	44.0	30.6	2.39	52.1	18.4	2.2	54.6	3.30	43.4	112.1	4.85	3.5
	14.00	3.3	7.6	1000	43.8	28.8	2.27	51.5	19.3	1.9	54.9	3.46	43.2	120.8	4.65	4.0
	14.00	3.3	7.6	1200	44.6	30.8	2.31	52.5	19.3	2.0	55.7	3.32	44.4	113.0	4.92	3.5
80	7.00	0.2	0.5	1000	39.4	27.0	2.87	49.2	13.7	3.0	57.3	3.56	45.3	123.1	4.72	4.4
	7.00	0.2	0.5	1200	40.2	28.9	2.92	50.1	13.8	3.0	58.1	3.41	46.5	114.8	4.99	3.8
	10.50	1.6	3.7	1000	40.9	27.7	2.66	49.9	15.4	2.7	59.5	3.59	47.4	125.1	4.86	4.3
	10.50	1.6	3.7	1200	41.7	29.6	2.71	50.9	15.4	2.7	60.4	3.44	48.7	116.6	5.15	3.7
	14.00	3.1	7.2	1000	41.6	28.0	2.57	50.3	16.2	2.4	60.7	3.61	48.5	126.2	4.93	4.3
	14.00	3.1	7.2	1200	42.4	30.0	2.62	51.3	16.2	2.5	61.6	3.46	49.8	117.5	5.22	3.7
85	7.00	0.2	0.5	1000	38.1	26.5	3.05	48.6	12.5	3.5	60.0	3.63	47.7	125.6	4.84	4.6
	7.00	0.2	0.5	1200	38.8	28.4	3.11	49.5	12.5	3.6	60.9	3.48	49.0	117.0	5.13	4.0
	10.50	1.6	3.7	1000	39.5	27.2	2.85	49.3	13.9	3.0	62.3	3.68	49.8	127.7	4.96	4.5
	10.50	1.6	3.7	1200	40.3	29.1	2.90	50.2	13.9	3.0	63.2	3.53	51.2	118.8	5.25	3.9
	14.00	3.0	6.9	1000	40.3	27.5	2.75	49.7	14.7	2.7	63.6	3.70	51.0	128.9	5.04	4.5
	14.00	3.0	6.9	1200	41.1	29.4	2.80	50.7	14.7	2.7	64.5	3.55	52.4	119.8	5.33	3.9
90	7.00	0.1	0.2	1000	36.8	26.1	3.24	47.9	11.4	3.5	62.7	3.71	50.1	128.1	4.95	4.7
	7.00	0.1	0.2	1200	37.5	27.9	3.30	48.8	11.4	3.6	63.6	3.56	51.5	119.1	5.24	4.1
	10.50	1.5	3.5	1000	38.3	26.6	3.03	48.6	12.6	3.2	65.2	3.77	52.4	130.4	5.07	4.6
	10.50	1.5	3.5	1200	39.0	28.5	3.09	49.5	12.6	3.3	66.1	3.61	53.8	121.0	5.37	4.0
	14.00	3.0	6.9	1000	39.0	27.0	2.93	49.1	13.3	2.9	66.3	3.80	53.4	131.4	5.11	4.6
	14.00	3.0	6.9	1200	39.8	28.9	2.98	50.0	13.4	2.9	67.3	3.64	54.9	121.9	5.42	4.0
100	7.00	0.1	0.2	1000	34.2	25.2	3.68	46.9	9.3	4.1	Operation not recommended					
	7.00	0.1	0.2	1200	34.9	27.0	3.75	47.8	9.3	4.2						
	10.50	1.5	3.5	1000	35.6	25.7	3.45	47.4	10.3	3.7						
	10.50	1.5	3.5	1200	36.3	27.5	3.51	48.3	10.3	3.8						
	14.00	2.8	6.5	1000	36.3	26.0	3.34	47.7	10.9	3.3						
	14.00	2.8	6.5	1200	37.0	27.8	3.40	48.6	10.9	3.4						
110	7.00	0.1	0.2	1000	32.1	24.9	4.16	46.4	7.7	4.6						
	7.00	0.1	0.2	1200	32.7	26.6	4.24	47.3	7.7	4.7						
	10.50	1.5	3.5	1000	33.2	25.0	3.91	46.5	8.5	4.1						
	10.50	1.5	3.5	1200	33.8	26.8	3.98	47.4	8.5	4.2						
	14.00	2.7	6.2	1000	33.7	25.2	3.79	46.7	8.9	3.7						
	14.00	2.7	6.2	1200	34.4	27.0	3.86	47.6	8.9	3.8						
120	7.00	0.1	0.2	1000	30.7	24.7	4.70	46.8	6.5	5.0						
	7.00	0.1	0.2	1200	31.3	26.4	4.79	47.7	6.5	5.1						
	10.50	1.4	3.2	1000	31.4	24.8	4.42	46.5	7.1	4.5						
	10.50	1.4	3.2	1200	32.0	26.5	4.50	47.4	7.1	4.6						
	14.00	2.6	6.0	1000	31.8	25.0	4.29	46.4	7.4	4.1						
	14.00	2.6	6.0	1200	32.4	26.8	4.37	47.3	7.4	4.1						

Interpolation is permissible; extrapolation is not.
All entering air conditions are 80°F DB and 67°F WB in cooling, and 70°F DB in heating.
AHRI/ISO certified conditions are 80.6°F DB and 66.2°F WB in cooling and 68°F DB in heating.
Table does not reflect fan or pump power corrections for AHRI/ISO conditions.
All performance is based upon the lower voltage of dual voltage rated units.
Operation below 40°F EWT is based upon a 15% antifreeze solution.
Operation below 60°F EWT requires optional insulated water/refrigerant circuit (standard on residential models).
See performance correction tables for operating conditions other than those listed above.
See Performance Data Selection Notes for operation within the shaded areas.
"-" HWG operation is limited by a discharge temperature switch.
*Indoor Split Only.

Performance Data — 50YDS/50YPS064 Full Load With FV4006

1850 CFM Nominal (Rated) Airflow Cooling, 1850 CFM Nominal (Rated) Airflow Heating

Performance capacities shown in thousands of Btuh

EWT °F	GPM	WPD		Cooling - EAT 80/67°F							Heating - EAT 70°F					
		PSI	FT	Airflow CFM	TC	SC	kW	HR	EER	HWC*	HC	kW	HE	LAT	COP	HWC*
20	15.00	5.0	11.6	Operation not recommended							39.4	3.90	26.5	93.2	2.96	4.0
	15.00	5.0	11.6								40.0	3.78	27.2	90.0	3.10	3.5
30	7.50	0.6	1.4	1575	61.7	37.7	3.19	71.7	19.3	-	43.5	4.06	30.0	95.6	3.14	4.1
	7.50	0.6	1.4	1850	62.8	40.5	3.37	74.3	18.6	-	44.1	3.93	30.8	92.1	3.29	3.6
	11.25	2.3	5.3	1575	62.6	38.1	3.05	72.1	20.5	-	45.3	4.11	31.7	96.6	3.23	4.1
	11.25	2.3	5.3	1850	63.7	41.0	3.22	74.7	19.8	-	46.0	3.98	32.5	93.0	3.39	3.5
	15.00	4.8	11.1	1575	63.9	38.9	2.98	73.1	21.4	-	46.2	4.14	32.5	97.2	3.27	4.0
	15.00	4.8	11.1	1850	65.0	41.8	3.15	75.7	20.6	-	46.9	4.01	33.4	93.5	3.43	3.5
40	7.50	0.5	1.2	1575	63.0	39.2	3.40	73.7	18.5	-	50.1	4.29	35.9	99.5	3.42	4.3
	7.50	0.5	1.2	1850	64.1	42.2	3.59	76.4	17.9	-	50.8	4.16	36.8	95.4	3.58	3.7
	11.25	2.2	5.1	1575	63.9	39.5	3.23	73.9	19.8	-	52.2	4.36	37.7	100.7	3.51	4.2
	11.25	2.2	5.1	1850	65.0	42.5	3.41	76.6	19.1	-	53.0	4.22	38.7	96.5	3.68	3.6
	15.00	4.5	10.4	1575	64.1	39.5	3.14	73.9	20.4	-	53.4	4.39	38.8	101.4	3.57	4.1
	15.00	4.5	10.4	1850	65.2	42.5	3.32	76.6	19.6	-	54.2	4.25	39.8	97.1	3.74	3.6
50	7.50	0.4	0.9	1575	62.9	40.0	3.64	74.4	17.3	2.0	57.0	4.53	41.8	103.5	3.69	4.5
	7.50	0.4	0.9	1850	64.0	43.0	3.85	77.1	16.6	2.1	57.8	4.39	42.9	98.9	3.86	3.9
	11.25	2.1	4.9	1575	63.6	40.1	3.44	74.4	18.5	1.8	59.5	4.60	44.1	105.0	3.79	4.4
	11.25	2.1	4.9	1850	64.7	43.1	3.63	77.1	17.8	1.8	60.4	4.46	45.3	100.2	3.97	3.8
	15.00	4.3	9.9	1575	63.9	40.1	3.34	74.3	19.1	1.5	61.0	4.64	45.4	105.9	3.85	4.3
	15.00	4.3	9.9	1850	65.0	43.1	3.53	77.0	18.4	1.5	61.9	4.50	46.6	101.0	4.03	3.8
60	7.50	0.4	0.9	1575	60.7	39.7	3.92	73.3	15.5	2.9	64.2	4.78	48.1	107.7	3.94	4.8
	7.50	0.4	0.9	1850	61.8	42.7	4.14	76.0	14.9	3.0	65.1	4.63	49.4	102.6	4.12	4.2
	11.25	2.1	4.9	1575	62.1	40.1	3.68	73.8	16.9	2.5	67.2	4.87	50.9	109.5	4.04	4.7
	11.25	2.1	4.9	1850	63.2	43.1	3.89	76.5	16.2	2.5	68.2	4.72	52.2	104.1	4.23	4.1
	15.00	4.1	9.5	1575	62.6	40.2	3.58	73.9	17.5	2.1	69.0	4.93	52.3	110.6	4.10	4.7
	15.00	4.1	9.5	1850	63.7	43.2	3.78	76.6	16.9	2.1	70.0	4.78	53.7	105.0	4.29	4.0
70	7.50	0.3	0.7	1575	58.0	39.1	4.24	71.7	13.7	4.0	71.7	5.06	54.8	112.2	4.15	5.3
	7.50	0.3	0.7	1850	59.0	42.0	4.48	74.3	13.2	4.0	72.8	4.90	56.2	106.4	4.35	4.6
	11.25	2.0	4.6	1575	59.7	39.6	3.97	72.5	15.0	3.4	75.4	5.17	58.0	114.3	4.27	5.2
	11.25	2.0	4.6	1850	60.8	42.6	4.20	75.1	14.5	3.4	76.5	5.01	59.5	108.3	4.48	4.5
	15.00	3.9	9.0	1575	60.5	39.9	3.85	72.9	15.7	2.8	77.4	5.23	59.7	115.5	4.34	5.1
	15.00	3.9	9.0	1850	61.6	42.9	4.07	75.5	15.1	2.9	78.5	5.07	61.3	109.3	4.54	4.4
80	7.50	0.2	0.5	1575	54.6	38.1	4.61	69.8	11.8	5.2	79.8	5.35	61.8	116.9	4.37	5.8
	7.50	0.2	0.5	1850	55.6	41.0	4.87	72.3	11.4	5.3	81.0	5.18	63.4	110.5	4.58	5.1
	11.25	2.0	4.6	1575	56.7	38.9	4.31	70.7	13.2	4.4	84.1	5.48	65.5	119.4	4.50	5.7
	11.25	2.0	4.6	1850	57.7	41.8	4.55	73.3	12.7	4.5	85.3	5.31	67.2	112.7	4.71	5.0
	15.00	3.7	8.5	1575	57.8	39.2	4.16	71.2	13.9	3.6	86.4	5.56	67.6	120.8	4.55	5.6
	15.00	3.7	8.5	1850	58.8	42.2	4.40	73.8	13.4	3.7	87.7	5.39	69.4	113.9	4.77	4.9
85	7.50	0.2	0.5	1575	52.9	37.6	4.83	68.7	11.0	5.9	84.1	5.50	65.5	119.4	4.48	6.2
	7.50	0.2	0.5	1850	53.8	40.4	5.10	71.2	10.5	6.0	85.3	5.33	67.2	112.7	4.69	5.4
	11.25	1.9	4.4	1575	55.0	38.4	4.50	69.8	12.2	5.0	88.7	5.66	69.5	122.1	4.59	6.1
	11.25	1.9	4.4	1850	56.0	41.3	4.76	72.3	11.8	5.1	90.0	5.48	71.3	115.0	4.81	5.5
	15.00	3.6	8.3	1575	56.1	38.8	4.35	70.3	12.9	4.1	91.3	5.74	71.8	123.7	4.66	6.0
	15.00	3.6	8.3	1850	57.1	41.7	4.60	72.8	12.4	4.2	92.6	5.56	73.7	116.3	4.88	5.2
90	7.50	0.2	0.5	1575	51.1	37.0	5.03	67.7	10.2	6.5	88.3	5.66	69.2	121.9	4.57	6.5
	7.50	0.2	0.5	1850	52.0	39.8	5.32	70.2	9.8	6.6	89.6	5.48	71.0	114.8	4.79	5.6
	11.25	1.9	4.4	1575	53.3	37.8	4.70	68.7	11.3	5.5	93.3	5.82	73.6	124.9	4.70	6.4
	11.25	1.9	4.4	1850	54.2	40.7	4.97	71.2	10.9	5.6	94.7	5.64	75.5	117.4	4.92	5.5
	15.00	3.5	8.1	1575	54.4	38.3	4.54	69.2	12.0	4.6	96.1	5.91	76.0	126.5	4.77	6.3
	15.00	3.5	8.1	1850	55.4	41.2	4.80	71.7	11.5	4.6	97.5	5.73	78.0	118.8	4.99	5.4
100	7.50	0.1	0.2	1575	47.4	35.7	5.53	65.8	8.6	8.0	Operation not recommended					
	7.50	0.1	0.2	1850	48.2	38.4	5.84	68.2	8.3	8.2						
	11.25	1.8	4.2	1575	49.6	36.6	5.15	66.7	9.6	6.8						
	11.25	1.8	4.2	1850	50.5	39.4	5.44	69.1	9.3	6.9						
	15.00	3.3	7.6	1575	50.7	37.1	4.97	67.2	10.2	5.6						
	15.00	3.3	7.6	1850	51.6	39.9	5.25	69.6	9.8	5.7						
110	7.50	0.1	0.2	1575	43.6	34.4	6.09	64.1	7.2	9.7						
	7.50	0.1	0.2	1850	44.4	37.0	6.43	66.4	6.9	9.9						
	11.25	1.8	4.2	1575	45.8	35.3	5.67	64.8	8.1	8.2						
	11.25	1.8	4.2	1850	46.6	38.0	5.99	67.1	7.8	8.4						
	15.00	3.1	7.2	1575	47.0	35.8	5.47	65.1	8.6	6.7						
	15.00	3.1	7.2	1850	47.8	38.5	5.78	67.5	8.3	6.9						
120	7.50	0.1	0.2	1575	40.1	33.2	6.73	62.9	6.0	11.5						
	7.50	0.1	0.2	1850	40.8	35.7	7.11	65.2	5.7	11.7						
	11.25	1.7	3.9	1575	42.1	34.0	6.26	63.2	6.7	9.8						
	11.25	1.7	3.9	1850	42.9	36.6	6.61	65.5	6.5	9.9						
	15.00	2.9	6.7	1575	43.2	34.5	6.04	63.5	7.2	8.0						
	15.00	2.9	6.7	1850	44.0	37.1	6.38	65.8	6.9	8.1						

Interpolation is permissible; extrapolation is not.
All entering air conditions are 80°F DB and 67°F WB in cooling, and 70°F DB in heating.
AHRI/ISO certified conditions are 80.6°F DB and 66.2°F WB in cooling and 68°F DB in heating.
Table does not reflect fan or pump power corrections for AHRI/ISO conditions.
All performance is based upon the lower voltage of dual voltage rated units.
Operation below 40°F EWT is based upon a 15% antifreeze solution.
Operation below 60°F EWT requires optional insulated water/refrigerant circuit (standard on residential models).
See performance correction tables for operating conditions other than those listed above.
See Performance Data Selection Notes for operation within the shaded areas.
"-" HWG operation is limited by a discharge temperature switch.
*Indoor Split Only.

Physical Data & Electrical Data

Physical Data

	50YDS				YPS			
Model	**026**	**038**	**049**	**064**	**026**	**038**	**049**	**064**
Compressor [1 Each)	Copeland UltraTech Two-Stage Scroll				Copeland UltraTech Two-Stage Scroll			
Factory Charge HFC410A (oz) [kg]	90 [2.55]	104 [2.95]	126 [3.57]	168 [4.76]	90 [2.55]	104 [2.95]	126 [3.57]	168 [4.76]
Water Connection Size								
(In)	1 Swivel				3/4 Swivel w/MPT Adapter		1 Swivel w/MPT Adapter	
HWG Connection Size								
(In)	1 Swivel				5/8 (O.D. Sweat)			
Line Set Connection Size								
Vapor Line Sweat Connection (in.)	3/4	7/8	7/8	1-1/8	3/4	7/8	7/8	1-1/8
Liquid Line Sweat Connection (in.)	3/8	3/8	3/8	1/2	3/8	3/8	3/8	1/2
Weight - Operating, (lbs) [kg]	203 [92]	221 [100]	250 [113]	265 [120]	223 [101]	241 [109]	250 [113]	265 [120]
Weight - Packaged, (lbs) [kg]	218 [99]	236 [107]	265 [120]	280 [127]	238 [108]	256 [116]	285 [129]	300 [136]
Maximum Working Water Press (psi) [kPa]					100 [689]	100 [689]	100 [689]	100 [689]

All units have dual compressor isolation, TXV expansion devices, and 1/2" [12.2mm] & 3/4" [19.1mm] electrical knockouts.

Electrical Data (50YDS)

Model	Compressor			HWG Pump FLA	External Pump FLA	Total Unit FLA	Min Circuit Amps	Max Fuse/ HACR (2)	Supply Wire (2)	
	RLA	LRA	Qty						Min AWG 60°C (1, 4)	Max Length Ft. (m) (3)
026	10.3	52.0	1	0.4	4.0	14.7	17.3	25	10	107 (32.7)
038	16.7	82.0	1	0.4	4.0	21.1	25.3	40	10	73 (22.3)
049	21.2	96.0	1	0.4	4.0	25.6	30.9	50	8	95 (29.2)
064	25.6	118.0	1	0.4	4.0	30.0	36.4	60	8	81 (24.8)

Rated Voltage of 208/230/60/1
HACR circuit breaker in USA only
Min/Max Voltage of 197/254
All fuses Class RK-5

Notes:
(1) If wire is applied at ambient greater than 86°F (30°C), consult table 310-16 of the National Electrical Code (NEC). The ampacity of non-metallic sheathed cable (NM), otherwise known as Romex cable, shall be that of 60°C (140°F) conditions per the NEC Article 336-26. If other wiring is used, consult applicable tables of the NEC.
(2) Current carrying capacity (amperes) of the wire used must not be less than the fuse/breaker size used.
(3) Wire length based on one way measurement with 2% voltage drop.
(4) Wire size based on 60°C copper conductor and Minimum Circuit Ampacity.

Electrical Data (50YPS)

Model	Compressor			Internal Loop Pump FLA	Total Unit FLA	Min Circuit Amps	Max Fuse/ HACR	Min AWG	Max Wire Ft. (m)
	RLA	LRA	Qty						
026	10.3	52.0	1	0.8	11.1	13.7	20	12	85 (26)
038	16.7	82.0	1	0.8	17.5	21.7	35	10	85 (26)
049	21.2	96.0	1	1.6	22.8	28.1	45	8	105 (32)
064	25.6	118.0	1	1.6	27.2	33.6	50	8	88 (27)

Rated Voltage of 208/230/60/1
HACR circuit breaker in USA only
Wire length based on one way measurement with 2% voltage drop
Min/Max Voltage of 197/254
All fuses Class RK-5
Wire size based on 60°C copper conductor and Minimum Circuit Ampacity.

HWG Module	Voltage	Pump FLA	Total FLA	Min Circuit Amps	Min Wire Size
AHWG1ACRS	115/60/1	0.52	0.52	1.20	14 ga.
AHWG1ACRS	208/230/60/1	0.40	0.40	0.90	14 ga.

GT-PX (50YDS) Dimensional Data

Model		Overall Cabinet			Water Connections							Refrigerant Connection				Electrical Knockouts			
		A Width	B Height	C Depth	1 Water In/Out	2 HWG In/Out	D1 Water In	D2 Water In	E Water Out	F HWG In	G HWG Out	3 Suction	4 Liquid	H	I	J	K	L	M
					Swivel														
026	in	22.4	19.3	25.6	1”	1”	1.6	2.1	11.0	13.9	16.9	3/4”	3/8”	7.3	5.1	3.6	6.1	8.6	1.4
	cm	56.9	49.0	65.0			4.1	5.3	27.9	35.3	42.9			18.5	13.0	9.1	15.5	21.8	3.6
038	in	25.4	21.3	30.6	1”	1”	1.7	3.4	12.1	15.6	18.9	7/8”	3/8”	8.4	6.1	3.6	6.1	8.6	1.7
	cm	64.5	54.1	77.7			4.3	8.6	30.7	39.6	48.0			21.3	15.5	9.1	15.5	21.8	4.3
049	in	25.4	21.3	30.6	1”	1”	1.7	3.4	12.1	15.6	18.9	7/8”	3/8”	8.4	6.1	3.6	6.1	8.6	1.7
	cm	64.5	54.1	77.7			4.3	8.6	30.7	39.6	48.0			21.3	15.5	9.1	15.5	21.8	4.3
064	in	25.4	21.3	30.6	1”	1”	1.7	3.4	12.1	15.6	18.9	1-1/8”	1/2”	8.4	6.1	3.6	6.1	8.6	1.7
	cm	64.5	54.1	77.7			4.3	8.6	30.7	39.6	48.0			21.3	15.5	9.1	15.5	21.8	4.3

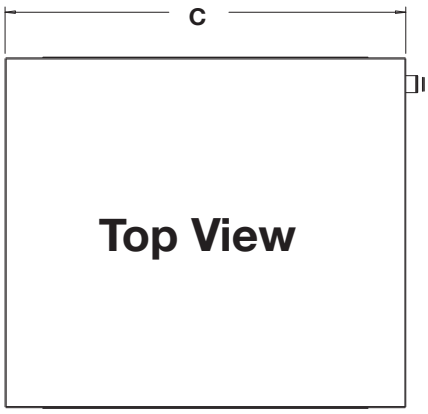

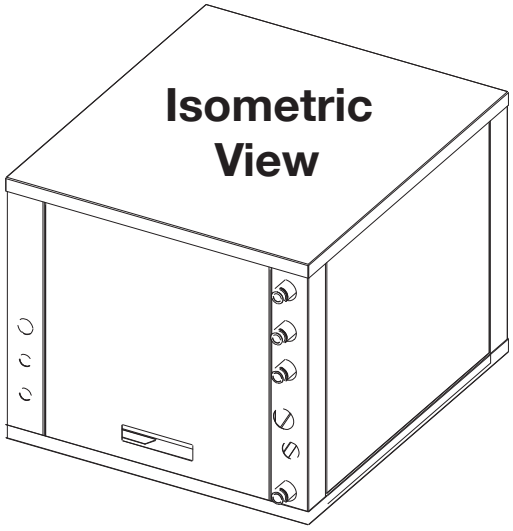

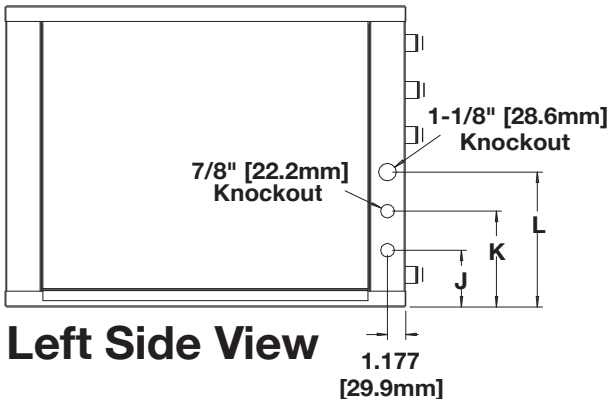

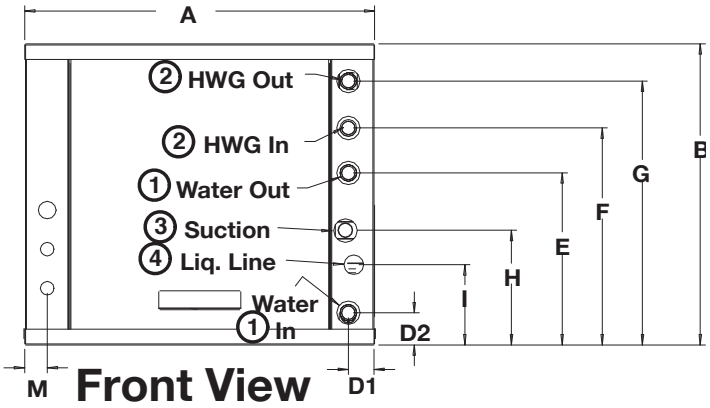

GT-PE (50YPS) Dimensional Data

Model		Overall Cabinet			Refrigerant Line Connections								Electrical Knockouts			
		A Width	B Height	C Depth	1* To HWG	2 From HWG	D	E	3 Liquid Line	4 Vapor Line	F	G	Line Voltage	Low Voltage	H	J
026	in	26.3	29.1	37.4	5/8"	5/8"	13.0	10.0	3/8"	3/4"	7.0	4.0	7/8"	7/8"	26.1	22.1
038	in	26.3	29.1	37.4	5/8"	5/8"	13.0	10.0	3/8"	7/8"	7.0	4.0	7/8"	7/8"	26.1	22.1
049	in	26.3	29.1	37.4	5/8"	5/8"	13.0	10.0	3/8"	7/8"	7.0	4.0	7/8"	7/8"	26.1	22.1
064	in	26.3	29.1	37.4	5/8"	5/8"	13.0	10.0	1/2"	1-1/8"	7.0	4.0	7/8"	7/8"	26.1	22.1

*Hot water generation is achieved using an external accessory, mounted indoors.

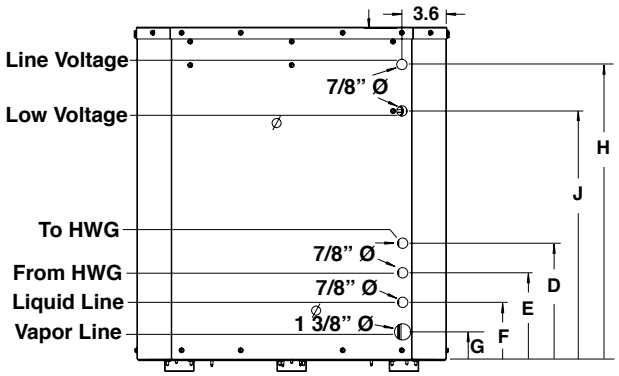

Back View

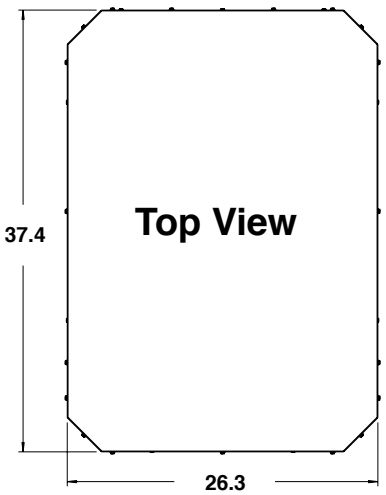

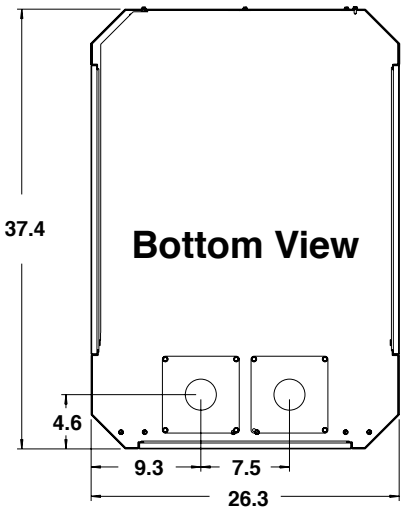

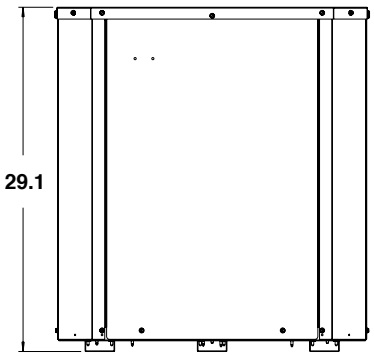

Front View

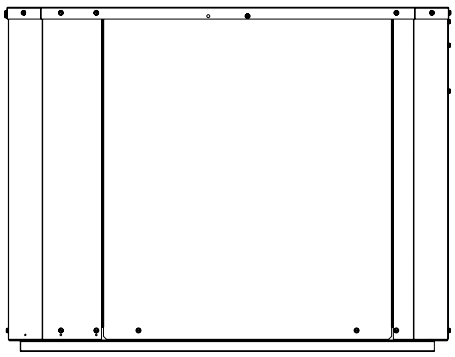

Side View

GT-PX (50YDS) Split Electrical Wiring Diagram - 96B0005N27

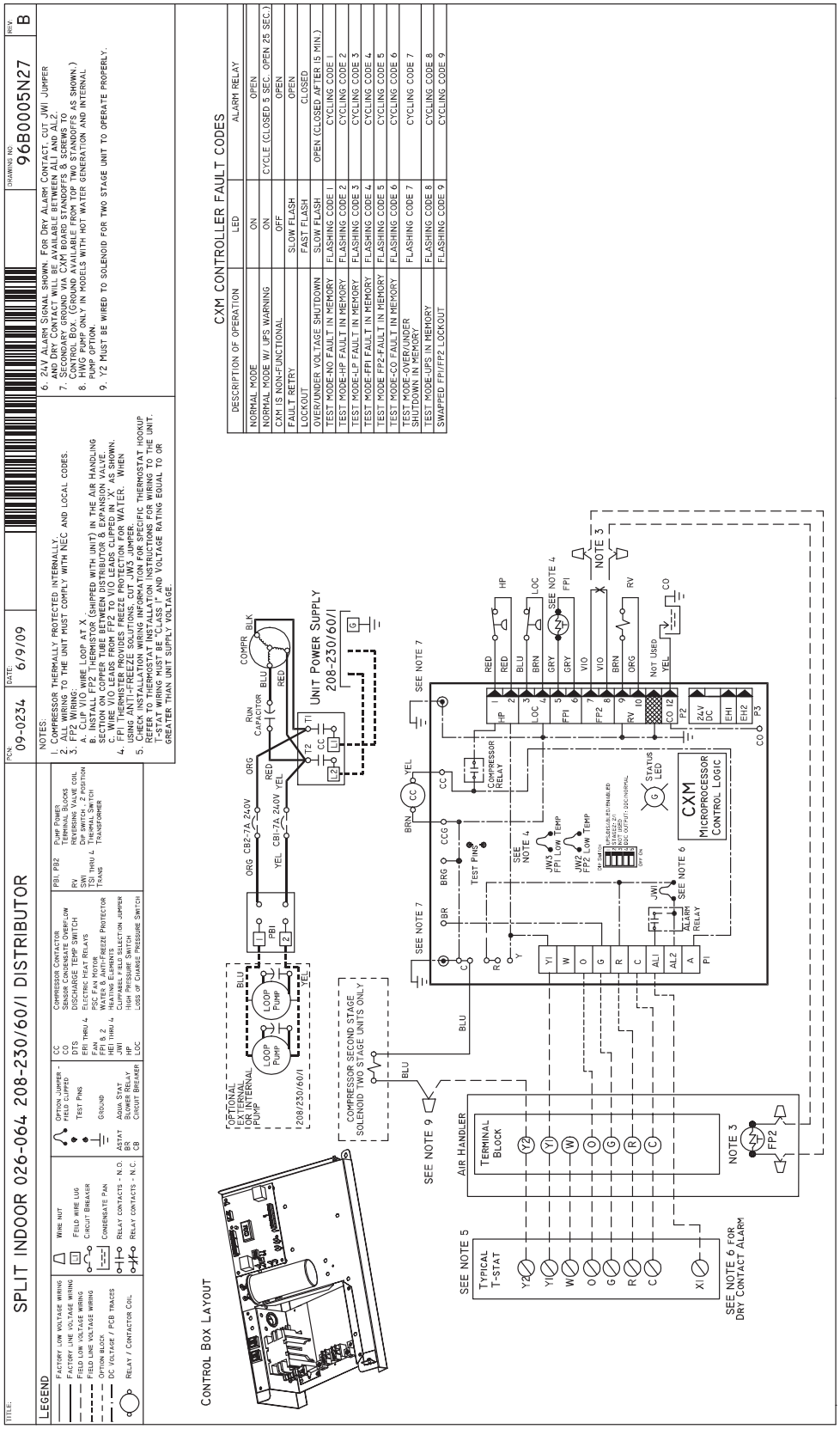

DESCRIPTION OF OPERATION	LED	ALARM RELAY
NORMAL MODE	ON	OPEN
NORMAL MODE W/ LIPS WARNING	ON	CYCLE (CLOSED 5 SEC. OPEN 25 SEC.)
CXM IS NON-FUNCTIONAL	OFF	OPEN
FAULT RETRY	SLOW FLASH	OPEN
LOCKOUT	FAST FLASH	CLOSED
OVER/UNDER VOLTAGE SHUTDOWN	SLOW FLASH	OPEN (CLOSED AFTER 15 MIN.)
TEST MODE-NO FAULT IN MEMORY	FLASHING CODE 1	CYCLING CODE 1
TEST MODE-HP FAULT IN MEMORY	FLASHING CODE 2	CYCLING CODE 2
TEST MODE-LP FAULT IN MEMORY	FLASHING CODE 3	CYCLING CODE 3
TEST MODE-FPI FAULT IN MEMORY	FLASHING CODE 4	CYCLING CODE 4
TEST MODE FP2-FAULT IN MEMORY	FLASHING CODE 5	CYCLING CODE 5
TEST MODE-CO FAULT IN MEMORY	FLASHING CODE 6	CYCLING CODE 6
TEST MODE-OVER/UNDER SHUTDOWN IN MEMORY	FLASHING CODE 7	CYCLING CODE 7
TEST MODE-UPS IN MEMORY	FLASHING CODE 8	CYCLING CODE 8
SWAPPED FPI/FP2 LOCKOUT	FLASHING CODE 9	CYCLING CODE 9

GT-PE (YPS) Split Electrical Wiring Diagram - 96B0140N01

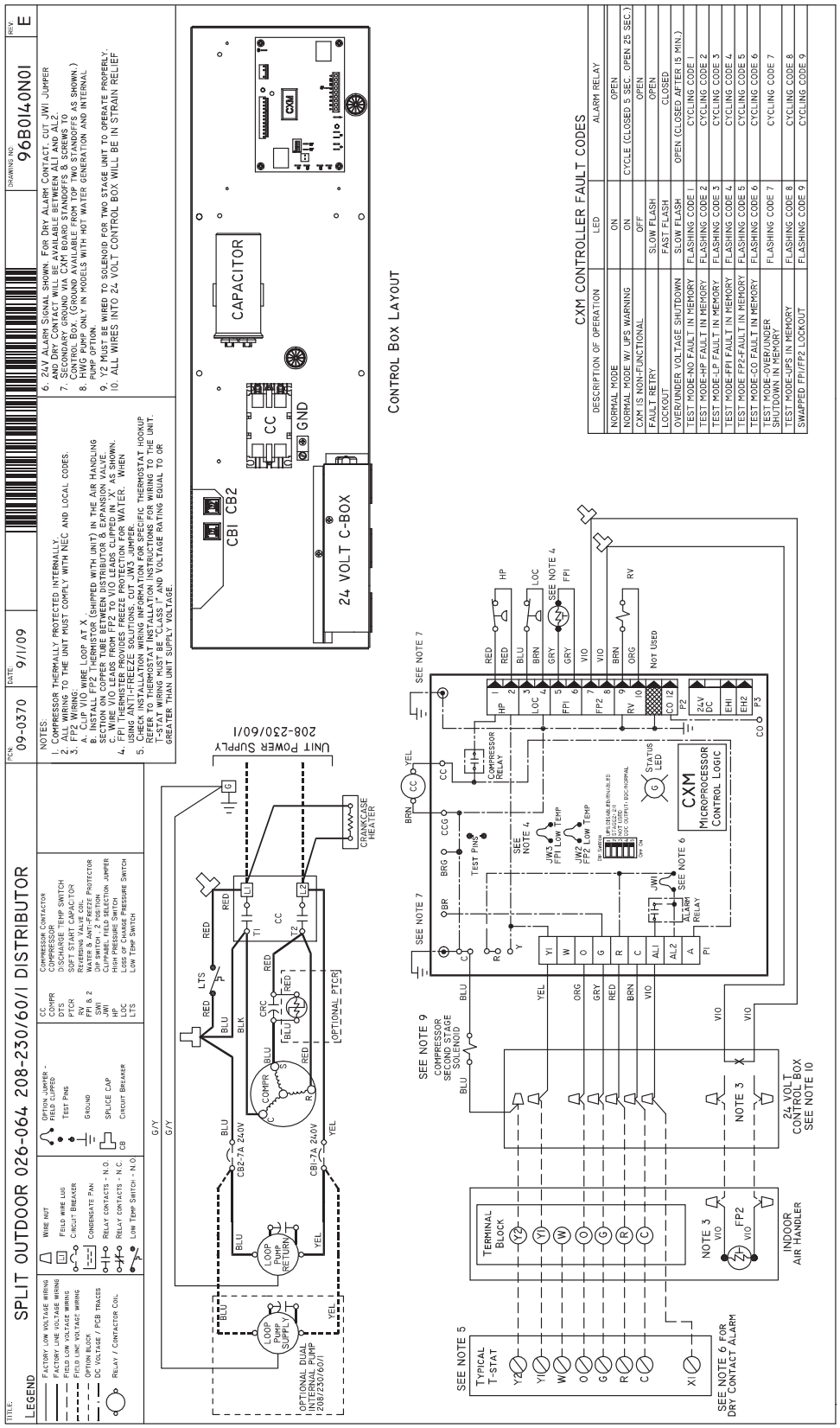

Equipment Selection

The installation of geothermal heat pump units and all associated components, parts, and accessories which make up the installation shall be in accordance with the regulations of ALL authorities having jurisdiction and MUST conform to all applicable codes. It is the responsibility of the installing contractor to determine and comply with ALL applicable codes and regulations.

General
Proper indoor coil selection is critical to system efficiency. Using an older-model coil can affect efficiency and may not provide the customer with rated or advertised EER and COP. Coil design and technology have dramatically improved operating efficiency and capacity in the past 20 years. Homeowners using an older coil are not reaping these cost savings and comfort benefits. NEVER MATCH AN R-22 INDOOR COIL WITH A Puron® COMPRESSOR SECTION.

Newer indoor coils have a larger surface area, enhanced fin design, and grooved tubing. These features provide a larger area for heat transfer, improving efficiency and expanding capacity. Typical older coils may only have one-third to one-half the face area of these redesigned coils.

Indoor Coil Selection - GT-PX and GT-PE (50YDS & 50YPS)
Split system heat pumps are rated in the AHRI directory with a specific indoor coil match. GT-PX and GT-PE (50YDS & 50YPS) models are rated with Carrier/Bryant FV4 or FE4 series variable speed air handlers as shown in Table 1a. Other brands of air handlers may attain the same AHRI ratings providing that the specifications meet or exceed those listed in Table 1a or 1b. An ECM motor and TXV is required. Cap tubes and fixed orifices are not acceptable. PSC fans may be used if matched to Table 1c, but will not meet AHRI ratings. If using PSC fan, compressor section must be operated as a single stage unit (i.e. wired for either 1st stage or 2nd stage). Without the ability to vary the airflow, supply air temperatures may not be acceptable if the compressor is allowed to change stages when used with a PSC fan motor.

Table 1a: GT-PX and GT-PE Carrier/Bryant Air Handler Matches for AHRI Ratings

Compressor Section	026	038	049	064
Air Handler Model FV4	003	005	006	006
Refrigerant	HFC-410A			
Metering Device	TXV (required)			
Air Coil Type Rows - Fins/in. Face Area (sq. ft.)	 Slope 3 - 14.5 3.46	 A 3 - 14.5 5.93	 A 3 - 14.5 7.42	 A 3 - 14.5 7.42
Cabinet Configuration	Upflow/Downflow/Horizontal (Multipoise)			
ECM Settings for AHRI Ratings (FV4 Fan Coil)	AC/HP size: 036 System Type: Comfort AC/HP CFM Adjust: Nom	AC/HP size: 036 System Type: HP-Effic AC/HP CFM Adjust: High	AC/HP size: 048 System Type: Comfort AC/HP CFM Adjust: High	AC/HP size: 060 System Type: Comfort AC/HP CFM Adjust: High
Fan Motor Type - HP	ECM - 1/2	ECM - 1/2	ECM - 3/4	ECM - 3/4

Table 1b: GT-PX and GT-PE Air Handler Characteristics for Brands other than Above Models

Model*	Nominal Tons*	Evaporator Temp (°F)	CFM	Capacity (MBtuh)**
026 - Part Load	1.5	50	530	19.2 - 22.4
026 - Full Load	2.0	52	880	24.2 - 28.2
038 - Part Load	2.5	51	700	25.2 - 29.2
038 - Full Load	3.0	50	1200	34.5 - 40.1
049 - Part Load	3.5	47	1000	34.3 - 39.9
049 - Full Load	4.0	48	1650	46.3 - 53.8
064 - Full Load	5.0	48	1850	54.5 - 63.3

* Nominal tons are at AHRI/ISO 13256-1 GLHP conditions. Two-stage units may be operated in single-stage mode if desired, where

smaller capacity is required. For example, a model 026 may be used as a 1-1/2 ton unit if “locked” into 1st stage operation only. If PSC fan is used, unit must be “locked” into either 1st or 2nd stage. An ECM fan is required for two-stage operation and for AHRI ratings. Size air handler for “Full Load” if operating in two-stage mode.

** When selecting an air handler based upon the above conditions, choose entering WB temperature of 67ºF. Use evaporator temperature, CFM and capacity requirements as listed above. The air handler capacity must be at least at the minimum capacity shown in the table in order for the AHRI rating condition to be valid. See Figure 1 for an example selection.

Air Handler Selection Example

Figure 1 shows a typical peformance table for a heat pump air handler. Suppose the evaporator temperature required is 50ºF, the capacity required is 35,000 Btuh and the airflow required is 1,200 CFM. Each evaporator temperature listed in the table shows three wet bulb temperatures. As recommended in the table notes above, select the 67ºF WB column. At 1,200 CFM, the model 003 capacity is 36 MBtuh, which is higher than the minimum capacity required of 35,000 Btuh. In this example, model 003 would be the appropriate match.

Figure 1: Selecting Air Handler

Unit Size	Evaporator Air CFM BF	Coil Refrigerant Temperatre (°F)*														
		35			40			45			50			55		
		Evaporator Air - Entering Wet-Bulb Temperature (°F)														
		72	67	62	72	67	62	72	67	62	72	67	62	72	67	62
003	800	59	48	38	53	42	32	46	35	24	39	27	20	30	18	16
	0.20	28	29	31	25	27	28	22	23	24	19	20	20	16	16	16
	1000	68	56	45	61	49	37	54	41	29	45	32	25	35	22	20
	0.22	32	34	37	29	31	33	26	28	28	23	24	25	19	20	20
	1200	75	62	49	68	54	42	60	45	34	50	36	29	40	25	23
	0.25	35	39	42	32	36	28	29	32	33	26	28	29	22	23	23
	1400	80	67	54	73	59	46	64	49	38	54	39	32	43	28	27
	0.27	28	43	47	35	39	43	32	36	37	28	32	32	24	26	27
005	750	61	49	39	55	43	33	48	37	27	41	29	20	33	21	17
	0.04	27	27	28	24	25	25	21	22	22	18	18	18	15	15	15
	950	74	60	48	67	53	40	59	45	33	50	35	25	39	24	21
	0.06	32	34	35	29	30	31	25	26	27	22	23	23	18	18	19
	1150	89	72	57	79	63	48	69	52	38	58	41	31	44	29	25
	0.07	37	39	41	33	35	36	29	31	32	25	25	27	20	22	22
	1500	103	84	66	92	73	56	81	61	46	67	48	39	52	34	31
	0.10	43	46	49	38	41	44	34	37	39	29	32	33	25	27	27
	1700	110	89	71	99	78	60	86	65	49	72	51	42	56	37	35
	0.11	45	50	53	41	45	48	36	39	42	31	34	36	27	29	30
006	1050	77	62	50	69	55	43	61	47	32	52	38	27	41	27	22
	0.01	34	36	37	31	32	33	27	28	29	23	25	24	20	20	20
	1300	100	82	65	90	71	55	79	60	45	66	47	37	49	32	27
	0.02	42	45	47	37	40	42	33	35	37	29	31	32	23	25	24
	1750	117	96	77	106	84	65	93	71	53	78	56	46	60	40	34
	0.04	48	53	57	44	48	52	39	43	46	34	38	39	29	31	31
	2050	126	103	83	114	91	71	99	76	59	84	60	50	65	44	39
	0.05	52	58	63	48	53	57	43	47	51	37	42	43	33	35	35
	2300	132	108	87	119	95	75	105	80	63	88	63	54	70	47	42
	0.06	55	62	58	50	57	61	45	51	54	40	45	46	35	39	38

= Gross cooling capacity (MBtuh)

= Sensible heat capacity (MBtuh)

BF = Bypass Factor

Engineering Guide Specifications

General
The liquid source heating/cooling split condensing units shall be AHRI/ISO/ASHRAE 13256-1 (ground-source closed-loop) performance certified and listed by a nationally recognized safety-testing laboratory or agency. Each unit shall be water run-tested at the factory. Each unit shall be pallet mounted and shipped with appropriate protective packaging to help avoid damage in transportation.

Units shall be warranted by the manufacturer against defects in materials and workmanship for a period ten years on the compressor and refrigerant circuit parts and five years on all remaining parts, with a service labor allowance for the first five years on the compressor and refrigerant circuit parts and two years on all remaining parts. An optional extended labor warranty is available which extends the service labor allowance to ten years for the compressor and refrigeration circuit parts and five years on all remaining parts.

The water source units shall be designed to operate with entering fluid temperature between 20°F and 120°F.

Casing & Cabinet
The cabinet shall be fabricated from heavy-gauge galvanized steel and painted with an epoxy powder coating. The interior shall be insulated with 1/2" thick, multi-density, coated glass fiber. Three service access panels shall be provided and shall be removable with linesets and water piping in place. The internal component layout shall provide for major service with the unit in-place for restricted access installations.

Refrigerant Circuit
All units shall contain Puron® sealed refrigerant circuit employing a hermetic motor compressor, bidirectional thermal expansion valve, reversing valve, coaxial tube water-to-refrigerant heat exchanger and service ports. An optional Hot Water Generator (desuperheater) coil shall be provided. Compressors shall be Copeland UltraTech™ Two-Stage scroll type designed for heat pump duty and mounted on spring vibration isolators. Compressor motors shall be single phase PSC with internal over load protection. A factory provided bidirectional filter drier shall be included in all models. The coaxial water-to-refrigerant heat exchangers shall be designed for close approach temperatures and be constructed of a convoluted copper (optional cupronickel) inner tube and a steel outer tube. The thermal expansion valve shall provide proper superheat over the entire fluid temperature range with minimal "hunting". The valve shall operate only in the heating mode with the use of an internal check valve. The water-to-refrigerant heat exchanger, optional desuperheater coil and refrigerant suction lines shall be insulated to prevent condensation at low liquid temperatures.

Electrical
CXM Control - A microprocessor-based compressor controller shall be provided to monitor and control unit operation. The control shall provide compressor sequencing, high and low pressure monitoring, field selectable low water temperature sensing, over/under voltage monitoring, and unit performance sentinel (UPS). The control shall also provide for water valve connection, a test mode, short cycle protection, random start-up, as well as fault LED, fault memory, and intelligent fault retry.

The control shall employ quick attach harness assemblies for low voltage connections to the control board to aid in troubleshooting or replacement. An integral terminal block with screw terminals shall be provided on the control for field low voltage connections. A circuit breaker protected 75VA transformer shall be employed. Line voltage box lugs shall be provided for unit wiring. Units shall have knockouts for entrance of low and line voltage wiring. The control box shall be harness plug-connected for easy removal. Residential models shall have a dual circut-breaker protected power block for the connection of external Flow Controller pump module.

Piping (Indoor Compressor Section Only)
Supply and return water connections, as well as Hot Water Generator (desuperheater) connections shall be 1" FPT brass swivel fittings which provide a union and eliminate the need for pipe wrenches and sealants when making field connections. A thread by sweat fitting shall be provided for connection to the water heater. All water piping shall be insulated to prevent condensation at low liquid temperatures.

Internal Flow Controller
(Outdoor Compressor Section only)
The unit shall include a factory-installed Flow Controller. The internal Flow Controller shall include the loop circulating pump(s), flushing/fill valves, and an expansion tank to reduce loop pressure variation. The circulating pump head shall be removable from the volute for easy replacement and the circulating pump shall be multi-speed.

Stainless steel braided flexible hoses with swivel connections and MPT adapters shall be included for connection to the water loop.

Accessories & Options

Hot Water Generator
An optional heat reclaiming desuperheater coil of vented double-wall copper construction suitable for potable water shall be provided. (Internally mounted on indoor units. Externally mounted on outdoor units.)

Cupro-Nickel Heat Exchanger
An optional corrosion resistant CuNi coaxial heat exchanger shall be factory installed in lieu of standard copper construction.

Thermostat (field installed)
A multistage auto-changeover electronic digital thermostat shall be provided. The thermostat shall offer 3 heating and 2 cooling stages with precise temperature control. An OFF-HEAT-AUTO-COOL-EMERG system switch, OFF-AUTO fan switch, and indicating LED's shall be provided. The thermostat shall read out in °F or °C and be calibratable.

Flow Controller (field installed)
A self-contained module shall provide all fluid pumping, fill and connection requirements for ground-source closed loop systems up to 20 GPM. The Flow Controller shall provide 1" pump isolation valves and 3-way service valves. Pump heads shall be removable from the volute for easy replacement. The Flow Controller shall be enclosed in a polystyrene case and fully insulated with urethane foam to prevent condensation. The Flow Controller shall have a 5-year warranty on all parts.

Hose Kits (field installed)
A rubber hose kit shall provide connections between the unit and Flow Controller. Rubber 1" hose allows flexible connection and absorbs vibration transmission between unit and Flow Controller. Brass elbows with MPT fittings for unit connection, barbed fittings for hose connection and FPT fittings for Pressure/Temperature ports shall be included to allow service and troubleshooting of the unit. Hose clamps shall be used to connect the hose to the brass elbows and Flow Controller.

Warranty Information

The Carrier Geothermal residential warranty reflects the reliability built in to every unit and includes five years on all parts, and ten years on the compressor and refrigerant circuit parts with a service labor allowance during the first 30 days. An optional extended warranty is available for residential units, which adds a labor allowance and trip charge. See extended warranty certificate (CA186) for details.

Revision History

Date	Page #	Description
01 Sept, 09	All	50YPS Information Added
05 June, 08	All	Reformatted Document Size
03 Mar, 08	Various	Various Minor Corrections
01 Mar, 07	20	Added New Notes to Electrical Data
01 Oct, 06	All	First Published