619P/538P
High–Wall Ductless Split System
Sizes 09 to 30

bryant®
Heating & Cooling Systems

Owner's Manual

TABLE OF CONTENTS

	PAGE
A NOTE ABOUT SAFETY	2
GENERAL	2
PART NAMES	3
OPERATING INSTRUCTIONS	4
REMOTE CONTROL OPERATION	5
REMOTE CONTROL FUNCTIONS	6-8
USING THE REMOTE CONTROL	9-16
OPERATING INSTRUCTIONS	17-19
CLEANING,MAINTENANCE AND TROUBLESHOOTING	20
MAINTENANCE	21-22
TROUBLESHOOTING TIPS	23-25

NOTE TO EQUIPMENT OWNER:

Please read this Owner's Information Manual carefully before installing and using this air conditioner and keep this manual for future reference.

For your convenience, please record the model and serial numbers of your new equipment in the spaces provided. This information, along with the installation data and dealer contact information, will be helpful should your system require maintenance or service.

UNIT INFORMATION

Model # _____

Serial # _____

INSTALLATION INFORMATION

Date Installed _____

DEALERSHIP CONTACT INFORMATION

Company Name: _____

Address: _____

_____

Phone Number: _____

Technician Name: _____

_____

A NOTE ABOUT SAFETY

Any time you see this symbol ⚠ in manuals, instructions and on the unit, be aware of the potential for personal injury. There are three levels of precaution:

DANGER identifies the most serious hazards which will result in severe personal injury or death.

WARNING signifies hazards that could result in personal injury or death.

CAUTION is used to identify unsafe practices which could result in minor personal injury or product and property damage.

NOTE is used to highlight suggestions which will result in enhanced installation, reliability, or operation.

⚠ WARNING

PERSONAL INJURY, DEATH AND/OR PROPERTY DAMAGE HAZARD

Failure to follow these warnings could result in personal injury, death or property damage.

Improper installation, adjustment, alteration, service, maintenance, or use can cause explosion, fire, electrical shock, or other conditions which may cause personal injury or property damage. Consult a qualified installer, service agency, or your distributor or branch for information or assistance. The qualified installer or service agency must use factory-authorized kits or accessories when modifying this product.

Read and follow all instructions and warnings, including labels shipped with or attached to unit before operating your new air conditioner.

⚠ SAFETY PRECAUTIONS

Never touch any switches with a wet hand. It may cause an electric shock.

Never use the device for any other purpose than the intended use.

Never place food, precision instruments, plants, animals, paint, etc. on the unit.

Do not expose plants or animals directly to the air flow.

Never clean the air conditioner with water.

Never use combustible cleaning agents as these could cause a fire or deformation.

Never place any burning objects close to the device if they could be directly affected by the emitted air.

Do not expose plants or animals directly to the air flow.

Never clean the air conditioner with water.

Never use combustible cleaning agents as these could cause a fire or deformation.

Never place any burning objects close to the device if they could be directly affected by the emitted air.

GENERAL

The high wall fan coil unit provides quiet, maximum comfort. In addition to cooling and/or heating, the high wall fan coil unit matched with an outdoor condensing unit will filter and dehumidify the air in the room to provide maximum comfort.

IMPORTANT: The high wall fan coil unit should be installed by authorized personnel only; using approved tubing and accessories. If technical assistance, service or repair is needed, contact the installer.

The high wall fan coil unit can be set up and operated from the remote control (provided). **If the remote is misplaced, the system can be operated from the "Auto" setting on the unit.**

Operating Modes:

The high wall fan coil unit has five operating modes.

- Fan only
- Auto
- Heating (heat pump models only)
- Cooling
- Dehumidification (DRY)

Fan Only

In Fan Only mode, the system filters and circulates room air without changing room air temperature.

Auto

In Auto mode, the system will automatically cool or heat the room according to the user-selected set point.

Heating

In Heating mode, the system heats and filters room air.

Cooling

In Cooling mode, the system cools, dries and filters room air.

Dehumidification (DRY)

In Dehumidification mode, the system dries, filters and slightly cools room air temperature. This mode prioritizes air dehumidification but it ***does not*** take the place of a dehumidifier.

Remote Control

The remote control transmits commands to set up and operate the system. The control has a window display panel that shows the current system status. The control can be secured to a surface when used with the mounting bracket provided.

PART NAMES

Indoor unit

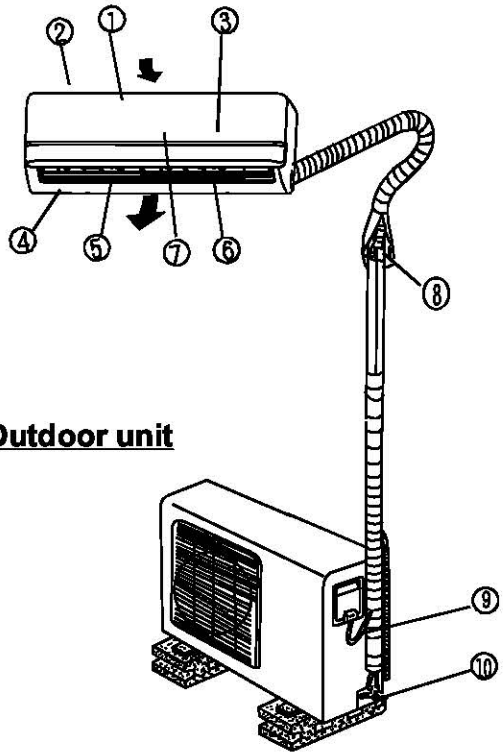

Outdoor unit

Names of parts

Indoor unit

1. Front panel
2. Air inlet
3. Air filter
4. Air outlet
5. Horizontal air flow grille
6. Vertical air flow louver(inside)
7. Display panel

Outdoor unit

8. Connecting pipe
9. Connecting cable
10. Stop valve

NOTE:

All illustrations are for reference only. Your unit may differ in appearance or may not include all components shown.

Indicator lamp

Depending on unit size, the display window on the indoor unit may look like the following:

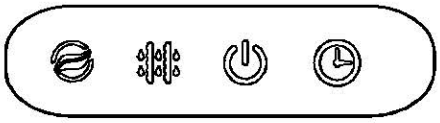

(A)

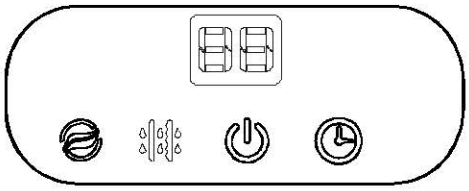

(B)

Indicator lamp

FRESH Indicator (optional)
This lamp illuminates when Clean Air feature is activated.

DEFROST Indicator
(Enabled on cooling & heating models only): Lights up when the air conditioner starts defrosting automatically or when the warm air control feature is activated in heating operation.

OPERATION Indicator
This lamp illuminates when the air conditioner is in operation.

TIMER Indicator
Lights up during Timer operation.

DIGITAL DISPLAY indicator(optional)
- Displays the temperature settings when the air conditioner is operational.
- Displays the malfunction code.

OPERATING INSTRUCTIONS

Special functions

Refrigerant Leakage Detection
When a refrigeration leak is detected at the outdoor unit, an 'EC' error code will appear on the indoor unit display panel.

Louver Angle Memory Function(optional):

The unit will memorize the previous angle of the louver, as long as it is set within the louver safety limitations. Note: The louver will return to the standard position if the power is turned off or the manual control button is pressed.

SELF CLEAN function（Optional）

- Under this function, the air conditioner will automatically clean and dry the evaporator.
- The unit will operate in following sequence: FAN ONLY mode at LOW fan speed, Heating operation at LOW fan speed (applicable to cooling & heating models only) and then FAN ONLY operation. Once the FAN ONLY operation has ended, the unit will turn off.

Note:

- This function is only available under COOL(AUTO COOL, FORCED COOL) and DRY mode.
- Before selecting this function, it is recommended to run the air conditioner under Cooling operation for approximately one half of an hour. Once the Self Clean function is activated, all TIMER settings will be cancelled.
- If the SELF CLEAN function is selected while the SELF CLEAN function is already in process, the unit automatically shut down.

Vertical swing function（Optional）

After the air conditioner is operating, users can control the vertical louver swing by using the remote control.

REMOTE CONTROL OPERATION

Using the remote control

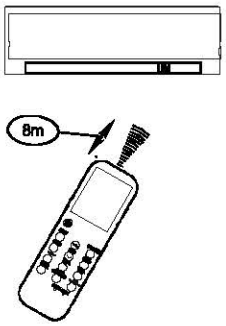

Location of the remote controller.

- The remote control can operate the unit from a distance of up to 26 ft. (8 m) as long as there are no obstructions.
- **NOTE:** When transmitting a command from the remote control to the unit, be sure to point the control toward the right side of the unit. The unit will confirm receipt of a command by sounding an audible beep.

⚠ Precautions

- The air conditioner will not operate if curtains, doors or other materials block the signals from the remote control to the indoor unit.
- Prevent any liquid from falling into the remote control. Do not expose the remote control to direct sunlight or heat.
- If the infrared signal receiver on the indoor unit is exposed to direct sunlight, the air conditioner may not function properly. Use curtains to prevent the sunlight from falling on the receiver.
- If other electrical unit,air conditioner react to the remote control. either move these unit,air conditioner or consult your local dealer.

Replacing batteries

Two AAA 1.5 v alkaline batteries (included) are required for operation of the remote control.

To install or replace batteries:

1. Slide the back cover off the control to open the battery compartment.
2. Insert batteries. Follow the polarity markings inside the battery compartment.
3. Replace battery compartment cover.

NOTE:

1. When replacing batteries, do not use old batteries or a different type battery. This may cause the remote control to malfunction.
2. If the remote is not going to be used for several weeks, remove the batteries. Otherwise battery leakage may damage the remote control.
3. The average battery life under normal use is about 6 months.
4. Replace the batteries when there is no audible beep from the indoor unit or if the Transmission Indicator fails to light.
5. When batteries are removed, the remote control erases all programmed settings. The control must be reprogrammed after insertion of new batteries.

REMOTE CONTROL FUNCTIONS

Remote Control Specifications

Model	RG52B/BGEU, RG52B4/BGEU1
Rated Voltage	Two AAA 1.5v alkaline batteries
Signal Receiving Range	26ft (8m)
Environment	23°F~140°F

Performance Features

1. Operating Mode: AUTO, COOL, DRY, HEAT and FAN.
2. Timer Setting Function in 24 hours.
3. Indoor Setting Temperature Range : 62°F~86°F.
4. Full function of LCD (Liquid Crystal Display).

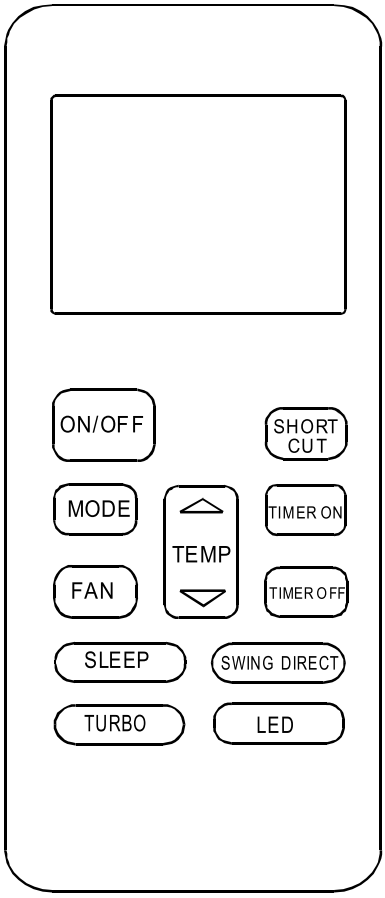

RG52B/BGEU

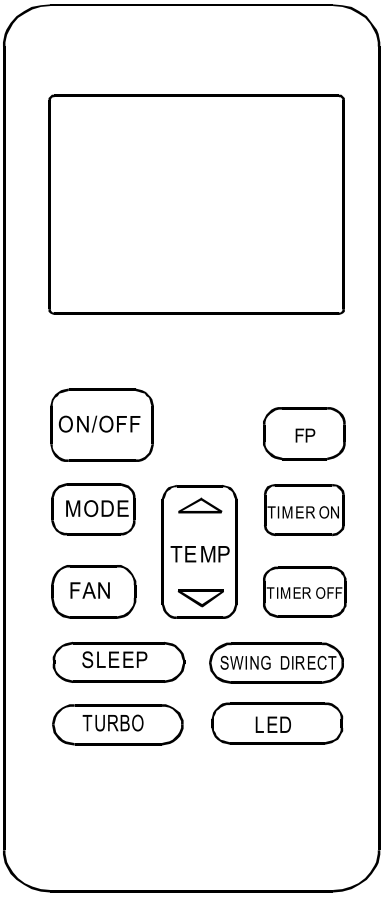

RG52B4/BGEU1

Function buttons

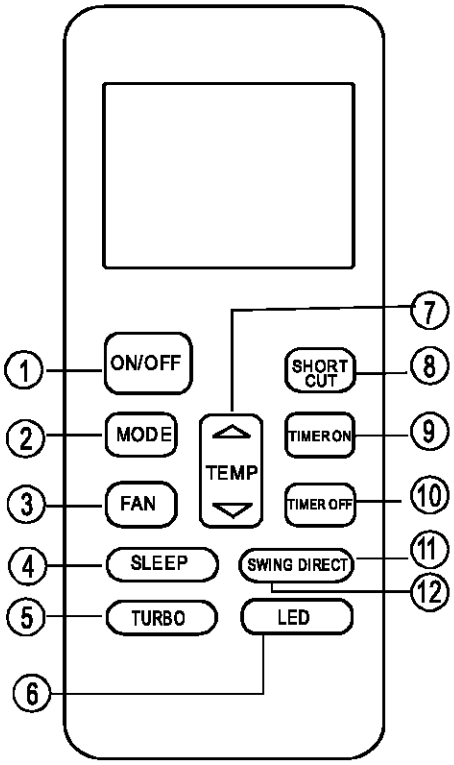

RG52B/BGEU

❶ **ON/OFF Button**
Operation starts when this button is pressed and stops when this button is pressed again.

❷ **MODE Button**
Each time this button is pressed, the operation mode is selected in a sequence of following:
AUTO → COOL → DRY → HEAT → FAN

NOTE: *Please do not select HEAT mode if you have a cooling only system.*

❸ **FAN Button**
Used to select the fan speed in four steps:
AUTO → LOW → MED → HIGH

❹ **SLEEP Button**
Activate/Disable sleep function. It can maintain the most comfortable temperature and save energy. This function is available on COOL, HEAT and AUTO mode only .
NOTE: *While the unit is running in SLEEP mode, it will be cancelled if the, FAN SPEED or ON/OFF button is pressed.*

❺ **TURBO Button**
Activate/Disable Turbo function. Turbo function enables the unit to reach the preset temperature at cooling or heating operation in the shortest time(if the indoor unit does not support this function, a corresponding operation will not occur.)

Activate/Disable

❻ **LED Button**
Activate/Disable indoor screen Display.
When pressing the LED button, the indoor unit display screen will be cleared. Once pressed again, the display will illuminate.

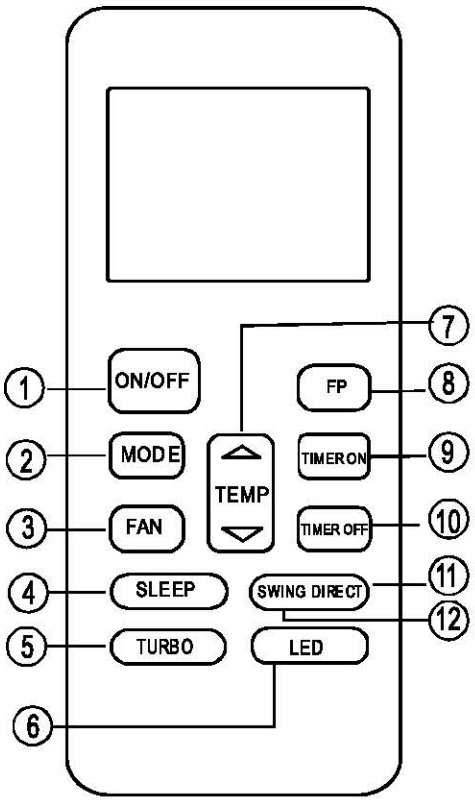

RG52B4/BGEU1

❼ **UP Button(△)**

Pushing this button will increase the indoor temperature setting in 1°F(1°C) increments up to 86°F(30°C).

DOWN Button(▽)

Pushing this button will decrease the indoor temperature setting in 1°F(1°C) increments up to 62°F(17°C).

NOTE: Press and hold "△" and "▽" buttons together for 3 seconds to alternate the temperature display between the °C & °F scale.

❽ **SHORTCUT Button(For RG52B/BGEU model)**

- Used to restore the current settings or resume previous settings.
- If the SHORTCUT button is the first function selected upon unit operation, the unit will operate in AUTO mode - 80°F (27°C), and auto fan speed.
- Push this button when remote control is on, the system will automatically revert back to the previous settings, including operating mode, temperature setting, fan speed level and sleep feature(if activated).
- If pressed for more than 2 seconds, the system will automatically restore the current operation settings, including operating mode, temperature settings, fan speed, and sleep features (if activated).

❽ **FP Button(For RG52B4/BGEU1 model)**

While the air conditioner operates in heating mode, pressing the LP button will activate 46°F (8°C) heating. The display window on the indoor unit will display "FP".

❾ **TIMER ON Button**

Press this button to initiate the auto-on time sequence. Each time the TIME ON button is pressed, it will increase the auto-timed setting in 30 minute increments. When the time setting displays 10, the the auto-timed setting will then increase by 60 minute increments. To cancel the auto-timed program, simply adjust the auto-on time to 0.0.

USING THE REMOTE CONTROL

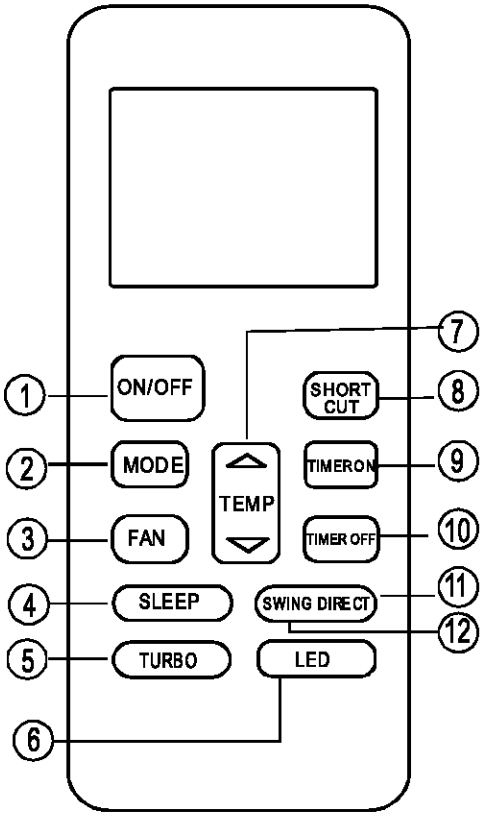

RG52B/BGEU

⑩ **TIMER OFF Button**
Press this button to initiate the auto-off time sequence. Each time the TIME OFF button is pressed, it will increase the auto-timed setting in 30 minute increments. When the time setting displays 10, the the auto-timed setting will then increase by 60 minute increments. To cancel the auto-timed program, simply adjust the auto-on time to 0.0.0.0.

⑪ **DIRECT Button**
Used to adjust the louver movement and set the desired up/down air flow direction. Each time the DIRECT button is pressed, the louver angle moves 6 degrees.

⑫ **SWING Button**
Used to start or stop the horizontal auto swing feature.

NOTE:

- The remote control button design is based on the standard model, and may appear slightly different from the actual remote.
- All of the functions described are accom plished by the unit. If the unit does not have a particular feature, there will be no corresponding function associated with that button.
- When there is a discrepancy between the "Remote control illustration" and the "Users Manual", on the remote control function, the Users Manual will prevail.

Indicators on LCD

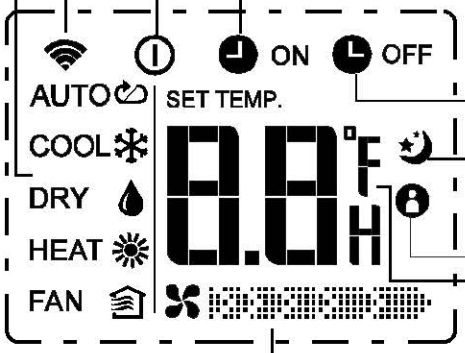

Mode display
Displays the current operation mode. Including auto( ), cool( ), dry( ), heat( ) (Not applicable to cooling only models), fan( ) and back to auto( ).

Transmission Indicator
This transmission indicator will illuminate when remote controller transmits signals to the indoor unit.

ON/OFF display
Displayed by pressing the ON/OFF button. Press the ON/OFF button again to remove.

TIMER ON display
Displayed when TIMER ON time is set.

TIMER OFF display
Displayed when TIMER OFF time is set.

Sleep Display
Displayed under sleeping operation. Press the SLEEP button again to remove.

FOLLOW ME Display(on some models)
Displayed when FOLLOW ME function is activated.

Temp./Timer display
Indicates the temperature and timer settings. It displays the temperature setting (62°F(17°C)~86°F (30°C)). It displays "TIMER ON" when the auto--on time function is set, "TIMER OFF" when the auto--off time function is set, and "TIMER ON OFF when both functions are set.

Fan speed display
Displays the selected fan speed, AUTO(no display) and three fan speed levels " " (LOW) " " (MED) " " (HIGH) can be indicated. The fan speed is AUTO when the operating mode is set to either AUTO or DRY.

How to use the buttons

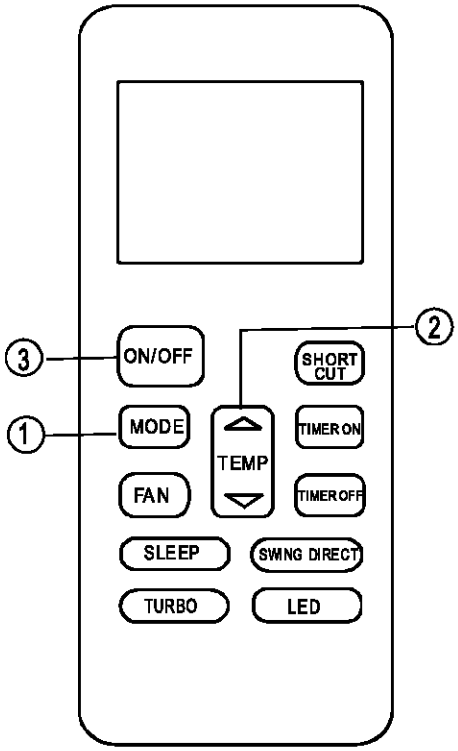

Auto operation

1. Press the **MODE** button to select Auto.
2. Press the **UP/DOWN** button to set the desired temperature. The temperature can be set within a range of 62°F(17°C)~86°F(30°C) in 1°F(1°C) increments.
3. Press the **ON/OFF** button to start the air conditioner.

NOTE

1. In the Auto mode, the air conditioner can logically choose the mode of Cooling, Fan, and Heating by sensing the difference between the actual ambient room temperature and the setting temperature on the remote controller.

2. In the Auto mode, you can not switch the fan speed. It has already been automatically controlled.

3. If the Auto mode is not comfortable for you , the desired mode can be selected manually.

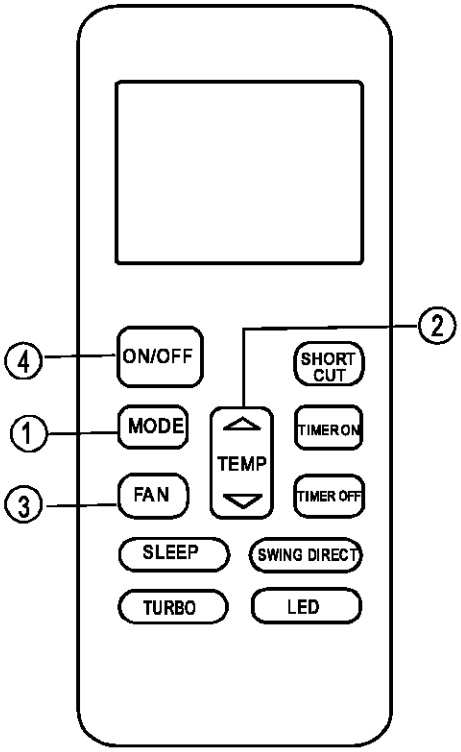

Cooling /Heating/Fan operation

1. Press the **MODE** button to select COOL, HEAT(cooling & heating models only) or FAN mode.
2. Press the **UP/DOWN** buttons to set the desired temperature. The temperature can be set within a range of 62°F(17°C)~86°F(30°C) in 1°F(1°C) increments.
3. Press the **FAN** button to select the fan speed in four steps- Auto, Low, Med,or High.
4. Press the **ON/OFF** button to start the air conditioner.

NOTE

In the FAN mode, the setting temperature is not displayed on the remote controller andy ou are not able to control the room temperature either. In this case, only step 1, 3 and 4 may be performed.

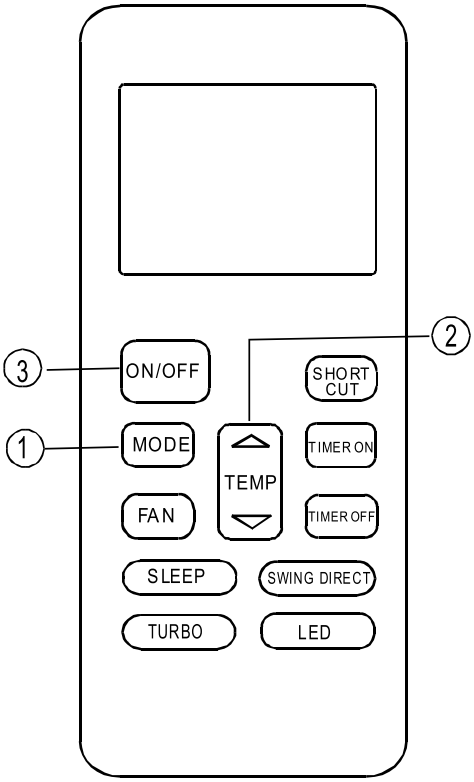

Dehumidifying operation

In Dehumidification mode, the system dries, filters and slightly cools room air temperature. This mode prioritizes air dehumidification but it does not take the place of a dehumidifier.

1. Press the **MODE** button to select DRY mode.
2. Press the **UP/DOWN** buttons to set the desired temperature. The temperature can be set within a range of 62°F(17°C)~86°F(30°C) in 1°F(1°C) increments.
3. Press the **ON/OFF** button to start the air conditioner.

NOTE

In the Dehumidifying mode, you can not switch the fan speed. It has already been automatically controlled.

Adjusting air flow direction

Use the SWING and DIRECT button to adjust the desired airflow direction.

1. DIRECT: Every time this button is pushed, the specific louver will swing by 6 degrees.
2. SWING: This allows for automatic horizontal louver swing.

NOTE: Always use the remote control to adjust the horizontal louver position, otherwise abnormal operation may occur. If the louver is manually adjusted out of its range, power the unit off and then on again.

Timer operation

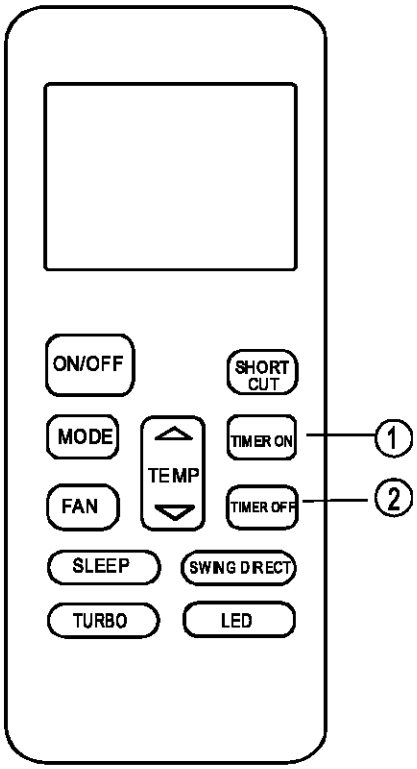

TIMER ON (to start the unit) and TIMER OFF (to stop the unit) can be used separately or together.

To set the Auto-on time.

1. Press the TIMER ON button. The remote controller shows TIMER ON, the last Auto-on setting time and the signal "H" will be shown on the LCD display area. Now it is ready to reset the Auto-on time to START the operation.
2. Push the TIMER ON button again to set desired Auto-on time. Each time you press the button, the time increases by half an hour between 0 and 10 hours and by one hour between 10 and 24 hours.
3. After setting the TIMER ON ,there will be a one second delay before the remote controller transmits the signal to the air conditioner. Then, after approximately another 2 seconds, the signal "h" will disappear and the set temperature will re-appear on the LCD display window.

To set the Auto-off time.

1. Press the TIMER OFF button. The remote control shows TIMER OFF, the last Auto-off setting time and the signal "H" will be shown on the LCD display area. Now it is ready to reset the Auto-off time to stop the operation.
2. Push the TIMER OFF button again to set desired Auto-off time. Each time you press the button, the time increases by half an hour between 0 and 10 hours and by one hour between 10 and 24 hours.
3. After setting the TIMER OFF, there will be a one second delay before the remote control transmits the signal to the air conditioner. Then, after approximately another 2 seconds, the signal "H " will disappear and the set temperature will re-appear on the LCD display window.

⚠ CAUTION

- The effective operation time set by the remote control for the timer function is limited to the following settings: 0.5, 1.0, 1.5, 2.0, 2.5, 3.0, 3.5, 4.0, 4.5, 5.0, 5.5, 6.0, 6.5, 7.0, 7.5, 8.0, 8.5, 9.0, 9.5, 10, 11, 12, 13, 14, 15,16,17, 18, 19, 20, 21, 22, 23 and 24.

Example of timer setting

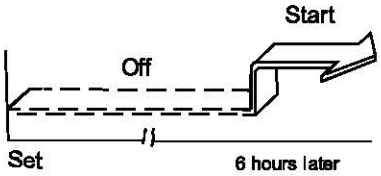

TIMER ON
(Auto-on Operation)

The TIMER ON feature is useful when you want the unit to turn on automatically before you return home. The air conditioner will automatically start operating at the set time.

Example:

To start the air conditioner in 6 hours.

1. Press the TIMER ON button, the last setting of starting operation time and the signal "H" will show on the display area.
2. Press the TIMER ON button to display "6.0H " on the TIMER ON display of the remote controller.
3. Wait for 3 seconds and the digital display area will show the temperature again. The "TIMER ON" indicator remains on and this function is activated.

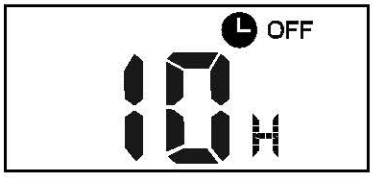

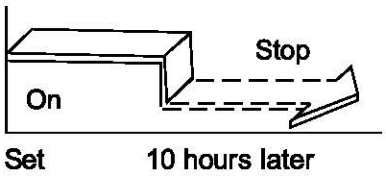

TIMER OFF
(Auto-off Operation)
The TIMER OFF feature is useful when you want the unit to turn off automatically after you go to bed. The air conditioner will stop automatically at the set time.

Example:
To stop the air conditioner in 10 hours.

1. Press the TIMER OFF button, the last setting of stopping operation time and the signal "H" will show on the display area.
2. Press the TIMER OFF button to display "10H " on the TIMER OFF display of the remote controller.
3. Wait for 3 seconds and the digital display area will show the temperature again. The "TIMER OFF" indicator remains on and this function is activated.

COMBINED TIMER
(Setting both ON and OFF timers simultaneously)

TIMER OFF → TIMER ON
(On → Stop → Start operation)
This feature is useful when you want to stop the air conditioner after you go to bed, and start it again in the morning when you wake up or when you return home.

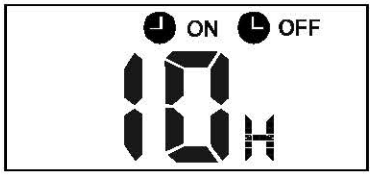

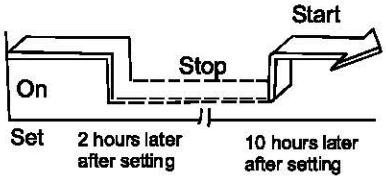

Example:
To stop the air conditioner 2 hours after setting and start it again 10 hours after setting.

1. Press the TIMER OFF button.
2. Press the TIMER OFF button again to display 2.0H on the TIMER OFF display.
3. Press the TIMER ON button.
4. Press the TIMER ON button again to display 10H on the TIMER ON display .
5. Wait for 3 seconds and the digital display area will show the temperature again. The "TIMER ON OFF" indicator remains on and this function is activated.

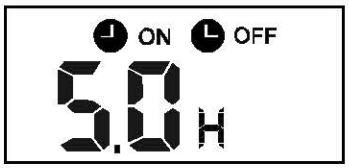

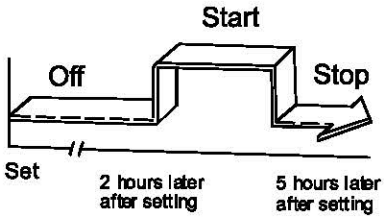

TIMER ON → TIMER OFF
(Off → Start → Stop operation)
This feature is useful when you want to start the air conditioner before you wake up and stop it after you leave the house.

Example:

To start the air conditioner 2 hours after setting, and stop it 5 hours after setting.

1. Press the TIMER ON button.
2. Press the TIMER ON button again to display 2.0H on the TIMER ON display.
3. Press the TIMER OFF button.
4. Press the TIMER OFF button again to display 5.0H on the TIMER OFF display .
5. Wait for 3 seconds and the digital display area will show the temperature again. The "TIMER ON OFF" indicator remains on and this function is activated.

OPERATING INSTRUCTIONS

NOTE: This manual does not include Remote Control Operations, see the <<Remote Control Instruction>> packed with the unit for details.

Operating temperature

Mode / Temperature	Cooling operation	Heating operation	Drying operation
Room temperature	62°F~90°F (17°C~32°C)	32°F~86°F (0°C~30°C)	50°F~90°F (10°C~32°C)
Outdoor temperature	32°C~122°C (0°F~50°F)	5°C~80°C (-15°F~30°F)	32°C~122°C (0°F~50°F)
	(5°C~122°C /-15°F~50°F: For the models with low temperature cooling system)		

NOTE:

1. Optimum performance will be achieved within these operating temperatures.If air conditioner is used outside of the above conditions, certain safety protection features might come into operation and cause the unit to function abnormally.
2. If the air conditioner runs for a long time in cooling mode and the humidity is high(over 80%) , condensed water may drip out of the unit. Please sets the vertical air flow louver to its maximum angle (vertically to the floor), and set HIGH fan mode.

Suggestion: For the unit adopts an Electric Heater, when the outside ambient temperature is below 32°F(0°C), we strongly recommend you to keep the machine plugged in order to guarantee it running smoothly.

Manual operation

Units are equipped with a switch to run emergency operation mode. It can be accessed by opening the front panel. This switch is used for manual operation in case the remote controller fails to work or maintenance is necessary.

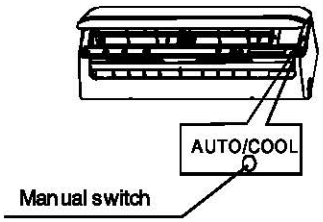

(1)

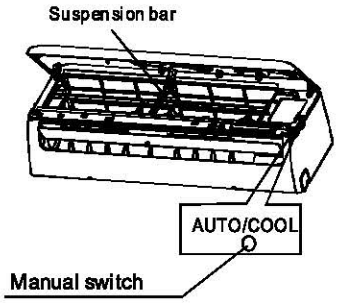

(2)

NOTE: The unit must be turned off before operating the manual control button. If the unit is operational, continue pressing the manual control button until the unit is off.

① Open and lift the front panel up to an angle until it remains fixed with a clicking sound. For some models, please use suspension bars to prop up the panel.

② One press of the manual control switch will lead to the forced AUTO operation. If pressed twice within five seconds, the unit will operate under forced COOL operation.

③ Close the panel firmly to its original position.

CAUTION:

- This switch is used for testing purposes only.
- To restore the remote controller operation, use the remote controller directly.

OPERATING INSTRUCTIONS

Airflow direction control

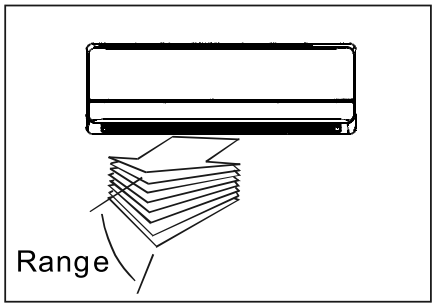

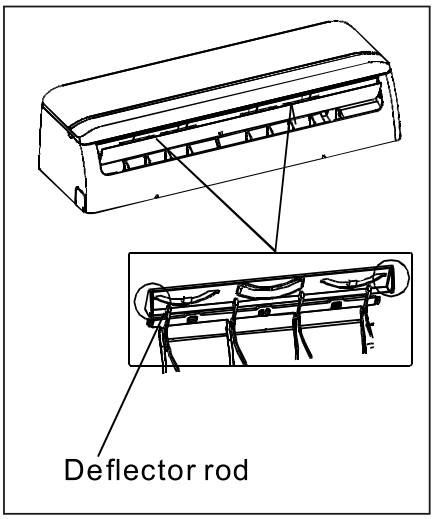

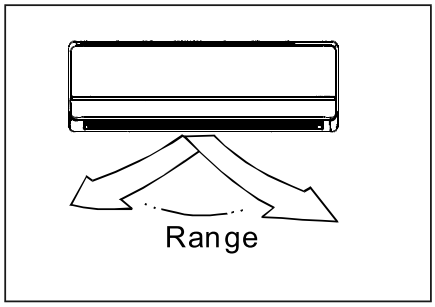

Adjust the airflow direction properly, otherwise it may cause discomfort or uneven room temperatures.

Adjust the horizontal/vertical louver using the remote controller. For some models, the vertical louver can only be adjusted manually.

To set the horizontal/vertical air flow direction

- Perform this function while the unit is in operation.
- Use the remote controller to adjust the air flow direction. The vertical/horizontal louver changes 6 degree in angle for each press, or swing up and down automatically. Please refer to the ‘‘REMOTE CONTROL OPERATION MANUAL’’ for details.
- For some models, the vertical louver can only be adjusted manually. Move the deflector rod manually to adjust the air flow in the direction you prefer.
  IMPORTANT:Do not insert fingers or objects into the blower panel and suction side of the unit. The fan could cause injury.

⚠ CAUTION

- Do not operate the air conditioner for long periods with the air flow direction set downward in cooling or dehumidifying mode. Otherwise, condensation may occur on the surface of the horizontal louver causing moisture to drip on to the floor or on furnishings.
- When the air conditioner is started immediately after it was stopped, the horizontal louver might not move for approximately 10 seconds.
- Open angle of the horizontal louver should not be set too small, as COOLING or HEATING performance may be impaired due to too restricted air flow.
- Do not move the horizontal louver manually, otherwise the horizontal louver will be out of sync. Please cease operating, turn off the unit power, and restart the air conditioner.
- Do not operate the unit with the horizontal louver in the closed position.

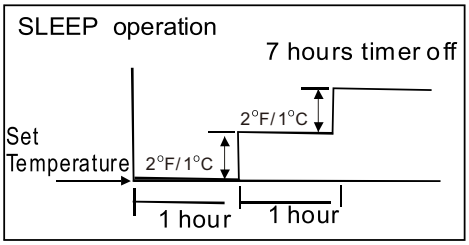

Cooling

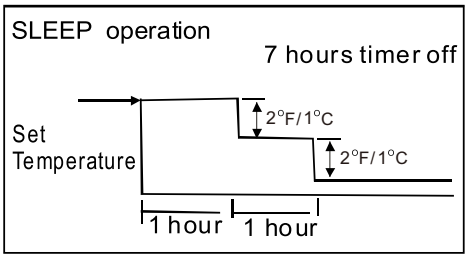

Heating

AUTO operation

- When you set the air conditioner in AUTO mode, it will automatically select cooling, heating(cooling/heating models only), or fan only operation depending on set temperature and the room temperature.
- The air conditioner will control room temperature automatically to the temperature point you set.
- If you feel uncomfortable in the AUTO mode, you can set your desired temperature.

SLEEP operation

When you push SLEEP button on remote controller during cooling, heating(cooling & heating models only), or AUTO operation , the air conditioner will automatically increase (cooling) or decrease (heating) 2°F (1°C) per hour for the first 2 hours, then hold steadily for the next 5 hours, after that it will switch off. This mode is used to conserve energy.

DRYING operation

- The fan speed will be automatically controlled under dry operation.
- During the dry operation, if the room temperature is lower than 50°F (10°C), the compressor stops operation and restarts until the room temperature is above 54°F (12°C).

Optimal operation

- To achieve optimal performance, please note the following:
- Adjust the air flow direction correctly so that it is not forwards people.
- Adjust the temperature to achieve the highest comfort level. Do not adjust the unit to excessive temperature levels.
- Close doors and windows on COOL or HEAT modes, or performance may be reduced.
- Use TIMER ON button on the remote controller to select a time you want to start your air conditioner.
- Do not put any object near air inlet or air outlet, as the efficiency of the air conditioner may be reduced and the air conditioner may stop running.
- Clean the air filter periodically, otherwise cooling or heating performance may be reduced.
  Do not operate the unit with the horizontal louver in the closed position.

CLEANING, MAINTENANCE AND TROUBLESHOOTING

⚠ CAUTION

ELECTRICAL SHOCK HAZARD

Failure to follow this caution may result in personal injury or death.
Always turn off power to the system before performing any cleaning or maintenance to the system. Turn off the outdoor disconnect switch located near outdoor unit. Be sure to disconnect indoor unit if on a separate switch

⚠ CAUTION

EQUIPMENT DAMAGE/OPERATION HAZARD

Failure to follow this caution may result in equipment damage or improper unit operation.
Operating the system with dirty air filters may damage the indoor unit and could cause reduced cooling performance, intermittent system operation, frost build-up on indoor coil or blown fuses.

Periodic Maintenance

Periodic maintenance is recommended to ensure proper operation of the unit. Recommended maintenance intervals may vary depending on the installation environment, e.g., dusty zones, etc. Refer to Table 1.

⚠ CAUTION

CUT HAZARD

Failure to follow this caution may result in personal injury.

The coil fins are very sharp. Use caution when cleaning.

Always wear safety protection.

Cleaning the Coil

Clean the coil at the beginning of each cooling season, or when necessary. Use a vacuum cleaner or a long-bristle brush to avoid damage to the coil fins.

Air Filters

Remove and clean the air filters once a month.

NOTE: If air filters show signs of excessive wear or are torn, they must be replaced. Contact your local dealer for replacement filters.

1. Open front panel on unit.
2. Pull filters down to remove.
3. Vacuum filters.
4. Clean with warm water.
5. Shake filter to remove excess water and dry thoroughly.
6. Replace filter by sliding into rack until filter snaps in place.
7. Close front panel on unit.

⚠ CAUTION

EQUIPMENT DAMAGE HAZARD

Failure to follow this caution may result in equipment damage.
When cleaning the front panel, do not use water hotter than 105°F (40.56°C) and do not pour water onto the fan coil. Do not use abrasive or petroleum based cleaners as they may damage the front panel.

Indoor Unit Front Panel

To clean the front panel on the indoor unit, wipe the outside with a soft, dry cloth. If necessary, a mild liquid detergent can be applied and wiped off with a dry cloth.

Preparing for Extended Shutdown Period

Clean the filters and reposition them in the unit. Operate the unit in Fan only mode for 12 hours to dry all internal parts.

Turn main power supply off and remove batteries from the remote control.

System Operation Recommendations

The items outlined in the following list will help to assure proper system operation:

- Replace both remote control batteries at the same time.
- Point the remote control toward the unit display panel when transmitting a command.
- Keep doors and windows closed while unit is operating.
- Contact an authorized service representative if a problem arises that cannot be easily resolved.
- Do not perform cleaning or maintenance activities while unit is on.
- Keep display panel on unit away from direct sunlight and heat as this may interfere with remote control transmissions.
- Do not block air intakes and outlets on the indoor or outdoor units.

Energy Saving Recommendations

The following recommendations will add greater efficiency to the ductfree system:

- Select a comfortable thermostat setting and leave it at chosen setting. Avoid continually raising and lowering the setting.
- Keep unit filter clean. Frequent cleaning may be necessary depending on indoor air quality.
- Use drapes, curtains or shades to keep direct sunlight from heating room on very hot days.
- Do not obstruct air intake on front panel.
- Turn on air conditioning before indoor air becomes too uncomfortable.

Troubleshooting

Refer to trouble shooting tips on pages 21-23 before contacting your local dealer.

MAINTENANCE

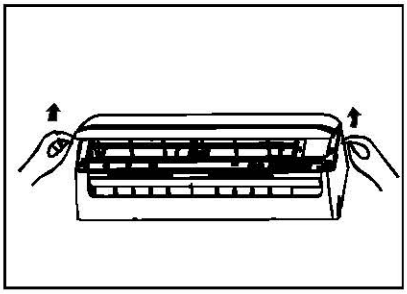

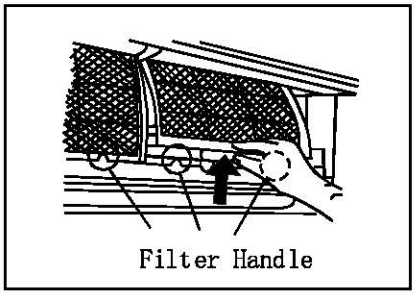

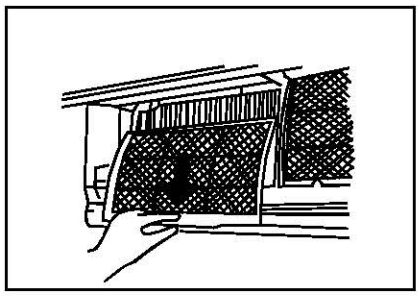

Before maintenance

- Turn the system off before cleaning. To clean, wipe with a soft, dry cloth. Do not use bleach or abrasives.

NOTE: Power supply must be disconnectd before cleaning the indoor unit.

⚠ CAUTIONS

- A cloth dampened with cold water may be used on the indoor unit if it is very dirty.
- Do not use a chemically treated cloth or duster to clean the unit.
- Do not use benzine, thinner, polishing powder, or similar solvents for cleaning. These may cause the plastic surface to crack or deform.
- Never use water hotter than 104°F(40°C)to clean the front panel, it could cause deformation or discoloration.

Cleaning the unit

To clean the front panel on the indoor unit, wipe the outside with a soft, dry cloth. If necessary, a mild liquid detergent can be applied and wiped off with a dry cloth.

Cleaning the air filter and air freshening filter

A clogged air filter reduces the cooling efficiency of this unit. Please clean the filter once every 2 weeks.

1. Lift the indoor unit panel up to an angle until it stops with a clicking sound.For some models, please use suspension bars to prop up the panel.
2. Take hold of the handle of the air filter and lift it up slightly to take it out from the filter holder, then pull it downwards.
3. Remove the AIR FILTER from the indoor unit.
   Clean the AIR FILTER once two weeks.
   Clean the AIR FILTER with a vacuum cleaner or water, then dry it up in cool place.

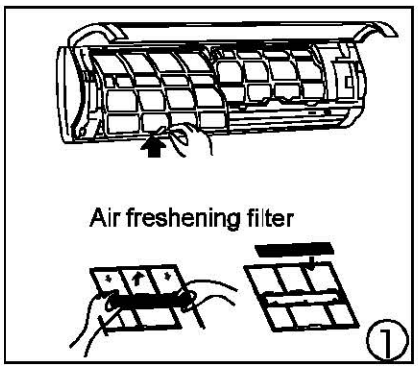

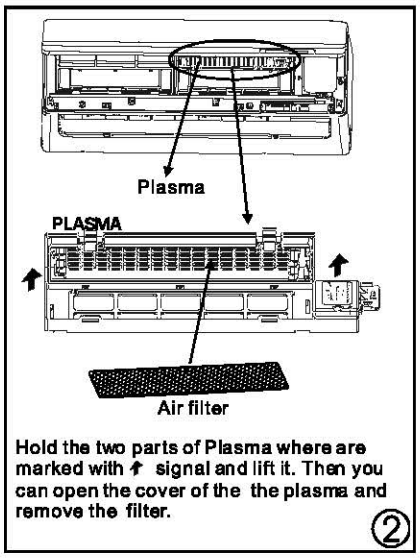

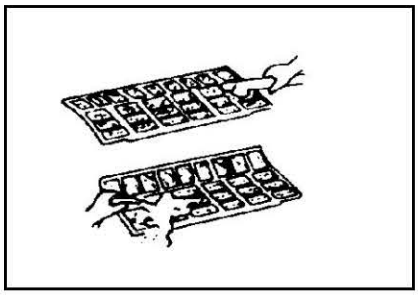

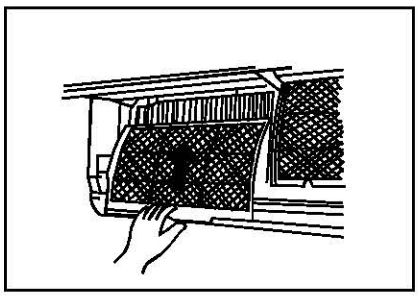

4. Remove the Air Freshening Filters from its supporting frame (The solution to disassemble may differ from each other for different filters. Refer to ① and ②). Clean the air freshening filter at least once a month, and replace it every 4-5 months.
   Clean it with vacuum cleaner, then dry it in cool place.

⚠ For the models with plasma, do not touch the plasma within 10 minutes after you open the panel.

5. Install the air freshening filter back into position.
6. Insert the upper portion of air filter back into the unit, taking care that the left and right edges line up correctly and place filter into position.

Replacement of air filter and air freshening filter

1. Remove the air filter.
2. Reinstall the air filter and securely close the front panel.

Preparation for extended non-operation

If you plan to idle the unit for a long time, perform the following:

(1) Clean the indoor unit and filters.
(2) Operate the fan for about half a day to dry the inside of the unit.
(3) Stop the air conditioner and disconnect power.
(4) Remove the batteries from the remote controller.
The outdoor unit requires periodic maintenance and cleaning. Do not attempt to do this yourself. Contact your dealer or service provider.

Pre-season inspection

- Check that the wiring is not broken off or disconnected.
- Clean the indoor unit and filters.
- Check that the air filter is installed.
- Check if the air outlet or inlet is blocked after the air conditioner has not been used for a long time.

⚠ Caution

- Do not touch the metal parts of the unit when removing the filter. Injuries can occur when handling sharp metal edges.
- Do not use water to clean inside the air conditioner. Exposure to water can destroy the insulation, leading to possible electric shock.
- When cleaning the unit, first make sure that the power and circuit breaker are turned off.
- Do not wash air filter with hot water at more than 104°F(40°C). Shake off moisture completely and dry it in the shade. Do not expose it directly to the sun, it may shrink.

TROUBLESHOOTING TIPS

Normal function of the air conditioner

The following events may occur during normal operation.

1. **Protection of the air conditioner.**

   Compressor protection

   - The compressor can't restart for 3-4 minutes after it stops.

   Anti-cold air (Cooling and heating models only)

   - The unit is designed not to blow cold air on HEAT mode, when the indoor heat exchanger is in one of the following three situations and the set temperature has not been reached.
     A) When heating has just started.
     B) Defrosting.
     C) Low temperature heating.
   - The indoor or outdoor fan stop running when defrosting (Cooling and heating models only).

   Defrosting (Cooling and heating models only)

   - Frost may be generated on the outdoor unit during heat cycle when outdoor temperature is low and humidity is high resulting in lower heating efficiency of the air conditioner.
   - During this condition air conditioner will stop heating operation and start defrosting automatically.
   - The time to defrost may vary from 4 to 10 minutes according to the outdoor temperature and the amount of frost built up on the outdoor unit.

2. **A white mist coming out from the indoor unit**
   - A white mist may generate due to a large temperature difference between air inlet and air outlet on COOL mode in an indoor environment that has a high relative humidity.
   - A white mist may generate due to moisture generated from defrosting process when the air conditioner restarts in HEAT mode operation after defrosting.

3. **Low noise of the air conditioner**
   - You may hear a low hissing sound when the compressor is running or has just stopped running. It is the sound of the refrigerant flowing or coming to a stop.
   - You can also hear a low "squeak" sound when the compressor is running or has just stopped running. This is caused by heat expansion and cold contraction of the plastic parts in the unit when the temperature is changing.
   - A noise may be heard due to louver restoring to its original position when power is turned on.

4. **Dust is blown out from the indoor unit.**
   This is a normal condition when the air conditioner has not been used for a long time or during first use of the unit.

5. **A peculiar smell comes out from the indoor unit.**
   This is caused by the indoor unit giving off smells permeated from building material, from furniture, or smoke.

6. **The air conditioner turns to FAN only mode from COOL or HEAT (For cooling and heating models only) mode.**
   When indoor temperature reaches the temperature setting on air conditioner, the compressor will stop automatically, and the air conditioner turns to FAN only mode. The compressor will start again when the indoor temperature rises on COOL mode or falls on HEAT mode (For cooling and heating models only) to the set point.

TROUBLESHOOTING TIPS

7. **The air conditioner runs Anti-mildew function after turning off the unit.**
   When turning off the unit under COOL(AUTO COOL, FORCED COOL) and DRY mode, the air conditioner will run Anti-mildew function for 7-10 minutes, if turns off on HEAT mode, the unit will continue operating for about 30 seconds at LOW fan speed, then stop the operation and turn off the unit automatically.

8. Dripping water may generate on the surface of the indoor unit when cooling in a high relatively humidity (relative humidity higher than 80%). Adjust the horizontal louver to the maximum air outlet position and select HIGH fan speed.

9. **Heating mode (For cooling and heating models only)**
   The air conditioner draws in heat from the outdoor unit and releases it via the indoor unit during heating operation. When the outdoor temperature falls, heat drawn in by the air conditioner decreases accordingly. At the same time, heat loading of the air conditioner increases due to larger difference between indoor and outdoor temperature. If a comfortable temperature can't be achieved by the air conditioner, we suggest you use a supplementary heating device.

10. **Auto-restart function**
- Power failure during operation will stop the air conditioner completely.
- For air conditioners without Auto-restart feature, when the power restores, the OPERATION indicator on the indoor unit starts flashing. To restart the operation, push the ON/OFF button on the remote controller. For air conditioners with Auto-restart feature, when the power restores, the air conditioner restarts automatically with all the previous settings preserved by the memory function.

TROUBLESHOOTING TIPS

Troubleshooting guide

Trouble	OPERATION(RUN) indicator or other indicators continue flashing.	The air conditioner may stop operation or continue to run in a safety condition (depending on models). Waiting for about 10 minutes, the fault may be recovered automatically, if not, disconnect the power and then connect it in again. If the problem still exists, disconnect the power and contact the nearest customer service center.
	If one of the following code appears on the display area : E0,E1,E2,E3.....or P0,P1,P2, P3...., or F1,F2,F3.....	
	Fuse blows frequently or circuit breaker trips frequently .	Stop the air conditioner immediately, disconnect the power and contact the nearest customer service center.
	Other objects or water fall into the air conditioner.	
	Terrible odors are smelled or abnormal sounds are heard.	

Malfunctions	Cause	What should be done?
Air conditioner does not start	Power cut	Wait for power to be restored.
	Air conditioner may have become Unplugged.	Check that plug is securely in wall receptacle.
	Fuse may have blown.	Replace the fuse.
	Battery in Remote controller may have been exhausted.	Replace the battery.
	The time you have set with timer is incorrect.	Wait or cancel timer setting.
Air conditioner not cooling or heating (Cooling/ heating models only) room very well while air flowing out from the air conditioner	Inappropriate temperature setting.	Set temperature correctly. For detailed method please refer to "Using remote control" section.
	Air filter is blocked.	Clean the air filter.
	Doors or Windows are open.	Close the doors or windows.
	Air inlet or outlet of indoor or outdoor unit has been blocked.	Clear obstructions away first, then restart the unit.
	Compressor 3 minutes protection has been activated.	Wait.
If the trouble has not been corrected, please contact a local dealer. Be sure to inform them of the detailed malfunctions and air conditioner model number.		

Notes: Do not attempt to repair the unit yourself.
Always consult an authorized service provider.

Copyright 2014 Carrier Corporation • 7310 W. Morris St. • Indianapolis, IN 46231

Edition Date:10/14

Catalog No: 538-619P-01SI

Manufacturer reserves the right to change, at any time, specifications and designs without notice and without obligations.

Replaces: New