# 58MXA
# Deluxe 4–Way Multipoise Fixed-Capacity Direct Vent Condensing Gas Furnace

Visit www.carrier.com

# Installation, Start-Up, and Operating Instructions Sizes 040-140, Series 170

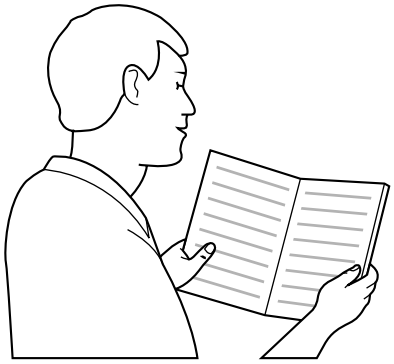

A93040

**NOTE:** Read the entire instruction manual before starting the installation.

This symbol → indicates a change since the last issue.

## TABLE OF CONTENTS


SAFETY CONSIDERATIONS ....2
INTRODUCTION ....3
CODES AND STANDARDS ....3
ELECTROSTATIC DISCHARGE (ESD) PRECAUTIONS ....5
APPLICATIONS ....6
General ....6
Upflow Applications ....6
Condensate Trap Location (Factory-Shipped Orientation) ....6
Condensate Trap Tubing (Factory-Shipped Orientation) ....6
Condensate Trap Location (Alternate Upflow Orientation) ....6
Condensate Trap Tubing (Alternate Upflow Orientation) ....6
Condensate Trap Field Drain Attachment ....7
Pressure Switch Tubing ....7
Upper Collector Box and Inducer Housing (Unused) Drain Connections ....7
Condensate Trap Freeze Protection ....7
Downflow Applications ....8
Condensate Trap Location ....8
Condensate Trap Tubing ....8
Condensate Trap Field Drain Attachment ....9
Pressure Switch Tubing ....9
Condensate Trap Freeze Protection ....10
Horizontal Left (Supply-Air Discharge) Applications ....10
Condensate Trap Location ....10
Condensate Trap Tubing ....10
Condensate Trap Field Drain Attachments ....11
Pressure Switch Tubing ....11
Condensate Trap Freeze Protection ....11
Construct a Working Platform ....11
Horizontal Right (Supply-Air Discharge) Applications ....11
Condensate Trap Location ....11
Condensate Trap Tubing ....11
Condensate Trap Field Drain Attachment ....13
Pressure Switch Tubing ....13
Condensate Trap Freeze Protection ....13
Construct a Working Platform ....13
LOCATION ....13
General ....13
Furnace Location Relative to Cooling Equipment ....14
Hazardous Locations ....14
INSTALLATION ....15
Leveling Legs (If Desired) ....15
Installation in Upflow and Downflow Applications ....15
Installation in Horizontal Applications ....16
Air Ducts ....17
General Requirements ....17
Ductwork Acoustical Treatment ....17
Supply Air Connections ....17
Return Air Connections ....17
Filter Arrangement ....18
Bottom Closure Panel ....19
Gas Piping ....19
Electrical Connections ....20
115–v Wiring ....20
24–v Wiring ....22
Accessories ....22
Direct Venting ....22
Removal of Existing Furnaces from Common Vent Systems ....22
Combustion-Air and Vent Piping ....22
Vent Extension Pipe ....27
Concentric Vent and Combustion-Air Termination Kit Installation ....29
Multiventing and Vent Terminations ....33
Condensate Drain ....34
General ....34
Application ....34
Condensation Drain Protection ....35
START-UP, ADJUSTMENTS AND SAFETY CHECK ....35
General ....35
Prime Condensate Trap With Water ....36
Purge Gas Lines ....37
Sequence of Operation ....37
Heating Mode ....37
Cooling Mode ....40
Thermidistat Mode ....40
Continuous Blower Mode ....41



**Manufacturer reserves the right to discontinue, or change at any time, specifications or designs without notice and without incurring obligations.**

Heat Pump Mode....41
Component Test....41
Adjustments....42
Set Gas Input Rate....42
Set Temperature Rise....48
Adjust Blower Off Delay (Heat Mode)....49
Set Thermostat Heat Anticipator....49
Check Safety Controls....49
Check Primary Limit Control....49
Check Pressure Switch....49
Checklist....50

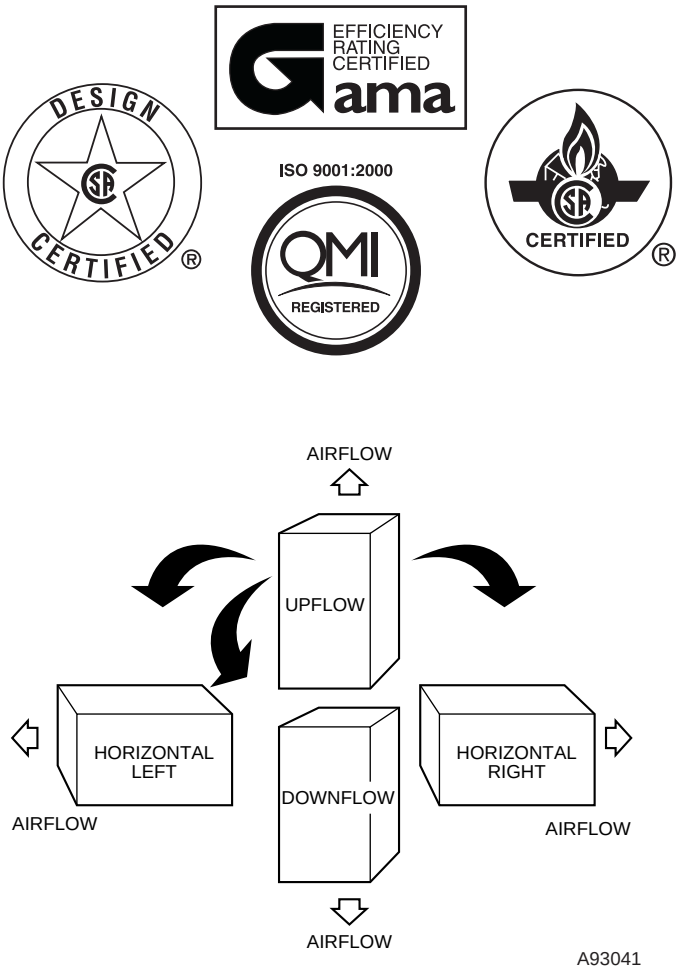


**Fig. 1—Multipoise Orientations**

## SAFETY CONSIDERATIONS

**⚠ CAUTION**

**UNIT RELIABILITY HAZARD**
Improper installation or misapplication of furnace may require excessive servicing or cause premature component failure.
Application of this furnace should be indoors with special attention given to vent sizing and material, gas input rate, air temperature rise, unit leveling, and unit sizing.

**⚠ WARNING**

**FIRE, EXPLOSION, ELECTRICAL SHOCK AND CARBON MONOXIDE POISONING HAZARD**
Failure to follow this warning could result in electrical shock, fire, personal injury, or death.
Improper installation, adjustment, alteration, service, maintenance, or use can cause carbon monoxide poisoning, explosion, fire, electrical shock, or other conditions which may cause personal injury or property damage. Consult a qualified installer, service agency, local gas supplier, or your distributor or branch for information or assistance. The qualified installer or agency must use only factory-authorized and listed kits or accessories when modifying this product.

Installing and servicing heating equipment can be hazardous due to gas and electrical components. **Only trained and qualified personnel should install, repair, or service heating equipment.** Untrained personnel can perform basic maintenance functions such as cleaning and replacing air filters. All other operations must be performed by trained service personnel. When working on heating equipment, observe precautions in literature, on tags, and on labels attached to or shipped with unit and other safety precautions that may apply.

These instructions cover the minimum requirements and conform to existing national standards and safety codes. In some instances, these instructions exceed certain local codes and ordinances, especially those that may not have kept up with changing residential construction practices. We require these instructions as a minimum for a safe installation.

Wear safety glasses and work gloves. Have a fire extinguisher available during start-up and adjustment procedures and service calls.

**⚠ CAUTION**

**CUT HAZARD**
Failure to follow this caution may result in personal injury. Sheet metal parts may have sharp edges or burrs. Use care and wear appropriate protective clothing and gloves when handling parts.

Recognize safety information. This is the safety-alert symbol ⚠. When you see this symbol on the unit and in instructions or manuals, be alert to the potential for personal injury.

Understand these signal words: DANGER, WARNING, CAUTION, and NOTE. These words are used with the safety-alert symbol. DANGER identifies the most serious hazards which **will** result in severe personal injury or death. WARNING signifies hazards which **could** result in personal injury or death. CAUTION is used to identify unsafe practices which **may** result in minor personal injury or product and property damage. NOTE is used to highlight suggestions which **will** result in enhanced installation, reliability, or operation.

The 58MXA Multipoise Condensing Gas-Fired Furnaces are C.S.A. (formerly AGA and CGA) design-certified for natural and propane gases (see furnace rating plate) and for installation in alcoves, attics, basements, closets, utility rooms, crawlspaces, and garages. The furnace is factory-shipped for use with natural gas. A C.S.A. listed gas conversion kit is required to convert furnace for use with propane gas.

See Fig. 3 for required clearances to combustibles.

Maintain a 1-in. clearance from combustible materials to supply air ductwork for a distance of 36 inches horizontally from the furnace. See NFPA 90B or local code for further requirements.

These furnaces SHALL NOT be installed directly on carpeting, tile, or any other combustible material other than wood flooring. In downflow installations, factory accessory floor base MUST be used when installed on combustible materials and wood flooring. Special base is not required when this furnace is installed on manufacturer's Coil Assembly Part No. CD5 or CK5, or when Coil Box Part No. KCAKC is used.

The 58MXA 040 through 120 size units are C.S.A. design-certified for use in manufactured (mobile) homes when factory accessory conversion kit is used. The 140 size unit is NOT design-certified for use in manufactured (mobile) homes. These furnaces are suitable for installation in a structure built on site or a manufactured building completed at final site. The design of this furnace line is NOT C.S.A. design-certified for installation in recreation vehicles or outdoors.

This furnace is designed for continuous return-air minimum temperature of 60 °F db or intermittent operation down to 55°F db such as when used with a night setback thermometer. Return-air temperature must not exceed 85°F db. Failure to follow these return air limits may affect reliability of heat exchangers, motors and controls. (See Fig. 4.)

These furnaces are shipped with the drain and pressure tubes connected for UPFLOW applications. Minor modifications are required when used in DOWNFLOW, HORIZONTAL RIGHT, or HORIZONTAL LEFT (supply-air discharge direction) applications as shown in Fig. 1. See details in Applications section.

This furnace must be installed with a direct-vent (combustion air and flue gas) system and a factory accessory termination kit. In a direct-vent system, all air for combustion is taken directly from the outdoor atmosphere and flue gases are discharged to the outside atmosphere. See furnace and factory accessory vent-air intake termination kit instructions for proper installation.

These furnaces are shipped with the following materials to assist in proper furnace installation. These materials are shipped in the main blower compartment.

| | |
|---|---|
| Installer Packet includes: | |
| Installation, Startup, and Operating Instructions | |
| Service and Maintenance Instructions | |
| User's Information Manual | |
| Warranty Certificate | |
| Loose Parts Bag includes: | Quantity |
| Pressure tube extension | 1 |
| Collector Box or condensate trap extension tube | 1 |
| Inducer housing drain tube | 1 |
| 1/2-in CPVC street elbow | 2 |
| Drain tube coupling | 1 |
| Drain tube coupling grommet | 1 |
| Vent and combustion-air pipe support | 2 |
| Condensate trap hole filler plug | 3 |
| Vent and combustion-air intake hole filler plug | 2 |
| Combustion-air pipe perforated disk assembly | 1 |
| Vent Pipe Extension | 1* |

* ONLY supplied with some furnaces.

For accessory installation details, refer to accessory installation instructions.

## INTRODUCTION

The model 58MXA 4-way multipoise, Gas-Fired, Category IV, direct-vent condensing furnace is available in model sizes ranging in input capacities of 40,000 to 138,000 Btuh.

## CODES AND STANDARDS

**Follow all national and local codes and standards in addition to these instructions.** The installation must comply with regulations of the serving gas supplier, local building, heating, plumbing, and other codes. In absence of local codes, the installation must comply with the national codes listed below and all authorities having jurisdiction.

In the United States and Canada, follow all codes and standards for the following:

### Step 1—Safety

- US: National Fuel Gas Code (NFGC) NFPA 54-2002/ANSI Z223.1-2002 and the Installation Standards, Warm Air Heating and Air Conditioning Systems ANSI/NFPA 90B
- CANADA: National Standard of Canada, Natural Gas and Propane Installation Code (NSCNGPIC) CAN/CGA -B149,1 -and.2 M-00

### Step 2—General Installation

- US: NFGC and the NFPA 90B. For copies, contact the National Fire Protection Association Inc., Batterymarch Park, Quincy, MA 02269; or for only the NFGC contact the American Gas Association, 400 N. Capitol, N.W., Washington DC 20001
- CANADA: NSCNGPIC. For a copy, contact Standard Sales, CSA International, 178 Rexdale Boulevard, Etobicoke (Toronto), Ontario, M9W 1R3, Canada.

### Step 3—Combustion and Ventilation Air

- US: Section 5.3 of the NFGC, Air for Combustion and Ventilation
- CANADA: Part 7 of the NSCNGPIC, Venting Systems and Air Supply for Appliances

### Step 4—Duct Systems

- US and CANADA: Air Conditioning Contractors Association (ACCA) Manual D, Sheet Metal and Air Conditioning Contractors National Association (SMACNA), or American Society of Heating, Refrigeration, and Air Conditioning Engineers (ASHRAE) 2001 Fundamentals Handbook Chapter 34.

### Step 5—Acoustical Lining and Fibrous Glass Duct

- US and CANADA: current edition of SMACNA, NFPA 90B as tested by UL Standard 181 for Class I Rigid Air Ducts

### Step 6—Gas Piping and Gas Pipe Pressure Testing

- US: NFGC; chapters 2, 3, 4, and 9 and national plumbing codes

→ In the state of Massachusetts:

- This product must be installed by a licensed plumber or gas fitter.
- When flexible connectors are used, the maximum length shall not exceed 36 inches.
- When lever type gas shutoffs are used they shall not exceed 36 inches.
- CANADA: NSCNGPIC Parts 3, 4, 5, A, B, E, and H.

### Step 7—Electrical Connections

- US: National Electrical Code (NEC) ANSI/NFPA 70-2002
- CANADA: Canadian Electrical Code CSA C22.1

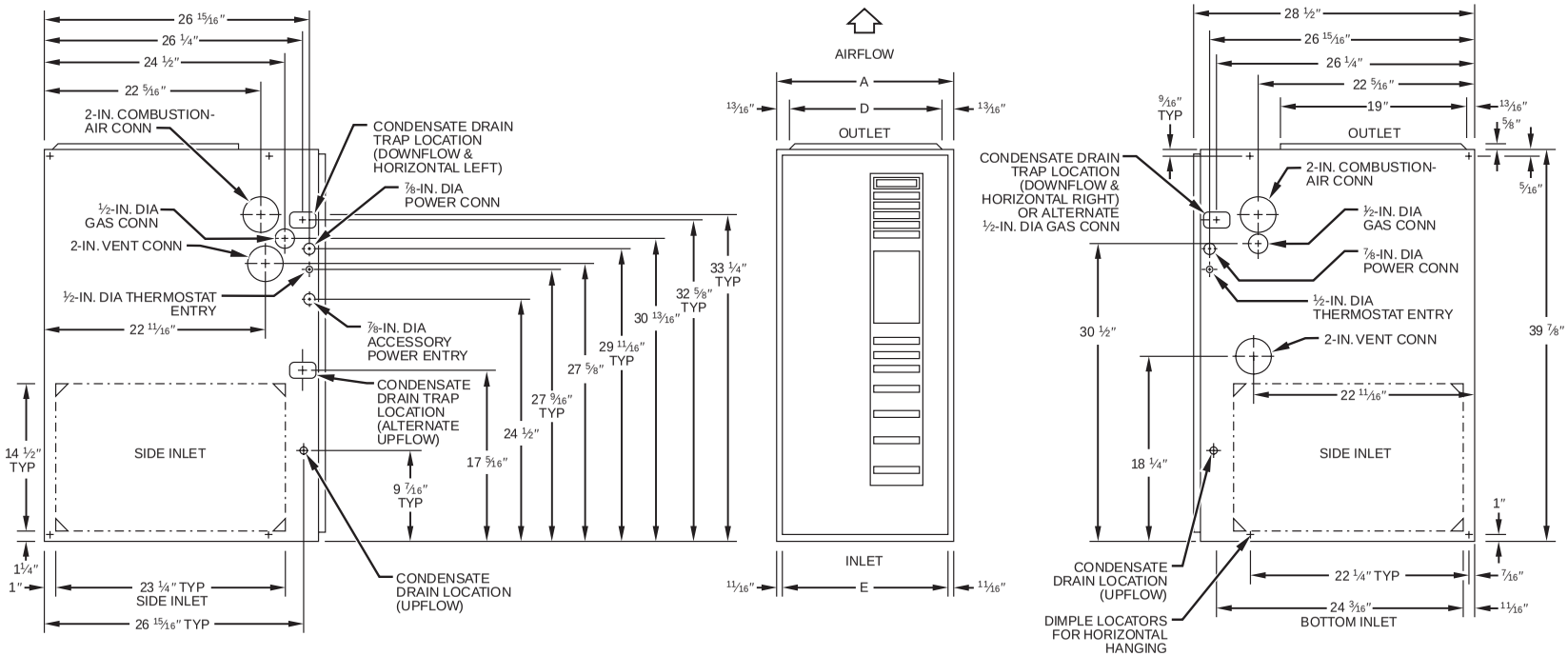


**NOTES:**
1. Minimum return-air openings at furnace, based on metal duct. If flex duct is used, see flex duct manufacturer's recommendations for equivalent diameters.
2. Minimum return-air opening at furnace:
   a. For 800 CFM–16-in. round or 14½ x 12-in. rectangle.
   b. For 1200 CFM–20-in. round or 14½ x 19½-in. rectangle.
   c. For 1600 CFM–22-in. round or 14½ x 23¼-in. rectangle.
   d. For airflow requirements above 1800 CFM, see Air Delivery table in Product Data literature for specific use of single side inlets. The use of both side inlets, a combination of 1 side and the bottom, or the bottom only will ensure adequate return air openings for airflow requirements above 1800 CFM at 0.5 W.C. ESP.

## Dimensions (in.)

| UNIT SIZE | A | D | E |
|---|---|---|---|
| **040-08** | 17-1/2 | 15-7/8 | 16 |
| **040-12** | 17-1/2 | 15-7/8 | 16 |
| **060-08** | 17-1/2 | 15-7/8 | 16 |
| **060-12** | 17-1/2 | 15-7/8 | 16 |
| **060-16** | 17-1/2 | 15-7/8 | 16 |
| **080-12** | 17-1/2 | 15-7/8 | 16 |
| **080-16** | 17-1/2 | 15-7/8 | 16 |
| **080-20** | 21 | 19-3/8 | 19-1/2 |
| **100-16** | 21 | 19-3/8 | 19-1/2 |
| **100-20** | 21 | 19-3/8 | 19-1/2 |
| **120-20** | 24-1/2 | 22-7/8 | 23 |
| **140-20** | 24-1/2 | 22-7/8 | 23 |

A02149

**Fig. 2—Dimensional Drawing**

## INSTALLATION

- This forced air furnace is equipped for use with natural gas at altitudes 0 - 10,000 ft (0 - 3,050m), except 140 size furnaces are only approved for altitudes 0 - 7,000 ft. (0 - 2,135m).
- An accessory kit, supplied by the manufacturer, shall be used to convert to propane gas use or may be required for some natural gas applications.
- This furnace is for indoor installation in a building constructed on site. This furnace may be installed in a manufactured (mobile) home when stated on rating plate and using factory authorized kit..
- This furnace may be installed on combustible flooring in alcove or closet at **Minimum Inches Clearance To Combustible Construction** as described below.
- This furnace requires a special venting system. Refer to the installation instructions for parts list and method of installation. This furnace is for use with schedule-40 PVC, PVC-DWV, CPVC, or ABS-DWV pipe, and must not be vented in common with other gas-fired appliances. Construction through which vent/air intake pipes may be installed is maximum 24 inches (600 mm), minimum 3/4 inches (19 mm) thickness (including roofing materials).
- Cette fournaise à air pulsé est équipée pour utilisation avec gaz naturel et altitudes comprises entre 0 - 3,050m (0 - 10,000 pi),excepté queles fournaises de 140 taille sont pour altitudes comprises entre 0 - 2,135m (0 - 7,000pi).
- Utiliser une trousse de conversion, fournie par le fabricant, pour passer au gaz propane ou pour certaines installations au gaz naturel.
- Cette fournaise à air pulsé est pour installation à l´intérieur dans un bâtiment construit sur place. Cette fournaise à air pulse peut être installée dans une maison préfabriquée (maison mobile) si prescrit par la plaque signalétique et si l' on utilise une trousse specifiée par le fabricant.
- Cette fournaise peut être installée sur un plancher combustible dans un enfoncement ou un placard en observant les **Dégagement Minimum En Pouces Avec Éléments De Construction Combustibles.**
- Cette fournaise nécessite un système d´évacuation spécial. La méthode d´installation et la liste des pièces nécessaires figurent dans les instructions d´installation. Cette fournaise doit s´utiliser avec la tuyauterie des nomenclatures 40 PVC, PVC-DWV, CPVC, ou ABS-DWV et elle ne peut pas être ventilée conjointment avec d´autres appareils à gaz. Épaisseur de la construction au travers de laquelle il est possible de faire passer les tuyaux d'aération (admission/évacuation): 24 po (600 mm) maximum, 3/4 po (19mm) minimum (y compris la toiture).

For upflow and downflow applications, furnace must be installed level, or pitched within 1/2" of level. For a horizontal application, the furnace must be pitched minimum 1/4" to maximum of 1/2" forward for proper drainage. See Installation Manual for IMPORTANT unit support details on horizontal applications.

Pour des applications de flux ascendant et descendant, la fournaise doit être installée de niveau ou inclinée à pas plus de 1/2" du niveau. Pour une application horizontale, la fournaise doit être inclinée entre minimum 1/4" et maximum 1/2" du niveau pour le drainage approprié. En cas d´installation en position horizontale, consulter les renseignements IMPORTANTS sur le support dans le manuel d´installation.

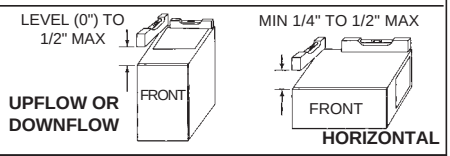


### MINIMUM INCHES CLEARANCE TO COMBUSTIBLE CONSTRUCTION

**ALL POSITIONS:**

* Minimum front clearance for service 24 inches (610mm).

† † 140 size furnaces require 1 inch back clearance to combustible materials.

**DOWNFLOW POSITIONS:**

† For installation on combustible floors only when installed on special base No. KGASB0201ALL, Coil Assembly, Part No. CD5 or CK5, or Coil Casing, Part No. KCAKC.

**HORIZONTAL POSITIONS:**

Line contact is permissible only between lines formed by intersections of top and two sides of furnace jacket, and building joists, studs, or framing.

§ Clearance shown is for air inlet and air outlet ends.

Ø 120 and 140 size furnaces require 1 inch bottom clearance to combustible materials.

DÉGAGEMENT MINIMUM EN POUCES AVEC ÉLÉMENTS DE CONSTRUCTION COMBUSTIBLES

**POUR TOUS LES POSITIONS:**

* Dégagement avant minimum de 610mm (24 po) pour l´entretien.

† † Pour les fournaises de 140 taille, 1 po (25mm) dégagement des matériaux combustibles est requis au-arriere.

**POUR LA POSITION COURANT DESCENDANT:**

† Pour l´installation sur le plancher combustible seulement quand on utilise la base spéciale, pièce nº KGASB0201ALL, l´ensemble serpentin, pièce nº CD5 ou CK5, ou le carter de serpentin, pièce nº KCAKC.

**POUR LA POSITION HORIZONTALE:**

Le contact n´est permis qúentre les lignes formées par les intersections du dessus et des deuxcôtés de la chemise de la fournaise, et des solives, des montants ou de la charpente du bâtiment.

§ La distance indiquée concerne l´extrémité du tuyau d´arrivée d´air et l´extrémité du tuyau de sortie d´air.

Ø Pour les fournaises de 120 et 140 taille, 1 po (25mm) dégagement des matériaux combusitbles est requis au-dessous.

This furnace is approved for UPFLOW, DOWNFLOW and HORIZONTAL installations.

Cette fournaise est approuvée pour l´installation HORIZONTALE et la circulation d´air VERS LE HAUT et VERS LE BAS.

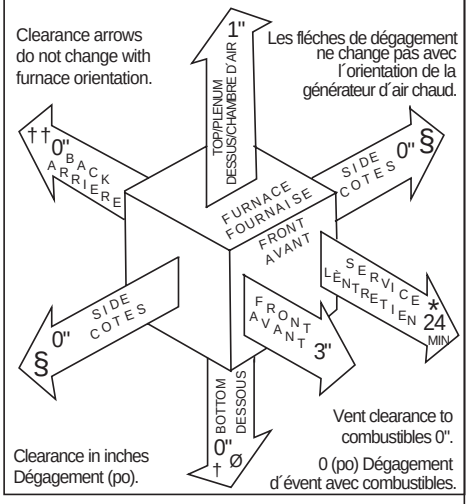


328066-201 REV. B LIT TOP

A04110

→ **Fig. 3—Clearances to Combustibles**

### ELECTROSTATIC DISCHARGE (ESD) PRECAUTIONS

**⚠ CAUTION**

→ **UNIT DAMAGE HAZARD**

Failure to follow this caution may damage furnace components.

Electrostatic discharge can affect electronic components. Take precautions during furnace installation and servicing to protect the furnace electronic control. Precautions will prevent electrostatic discharges from personnel and hand tools which are held during the procedure. These precautions will help to avoid exposing the control to electrostatic discharge by putting the furnace, the control, and the person at the same electrostatic potential.

1. Disconnect all power to the furnace. Multiple disconnects may be required. DO NOT TOUCH THE CONTROL OR **ANY** WIRE CONNECTED TO THE CONTROL PRIOR TO DISCHARGING YOUR BODY'S ELECTROSTATIC CHARGE TO GROUND.
2. Firmly touch the clean, unpainted, metal surface of the furnace chassis which is close to the control. Tools held in a person's hand during grounding will be satisfactorily discharged.
3. After touching the chassis, you may proceed to service the control or connecting wires as long as you do nothing to recharge your body with static electricity (for example; DO NOT move or shuffle your feet, do not touch ungrounded objects, etc.).
4. If you touch ungrounded objects (and recharge your body with static electricity), firmly touch a clean, unpainted metal surface of the furnace again before touching control or wires.
5. Use this procedure for installed and uninstalled (ungrounded) furnaces.
6. Before removing a new control from its container, discharge your body's electrostatic charge to ground to protect the control from damage. If the control is to be installed in a furnace, follow items 1 through 4 before bringing the control or yourself in contact with the furnace. Put all used and new

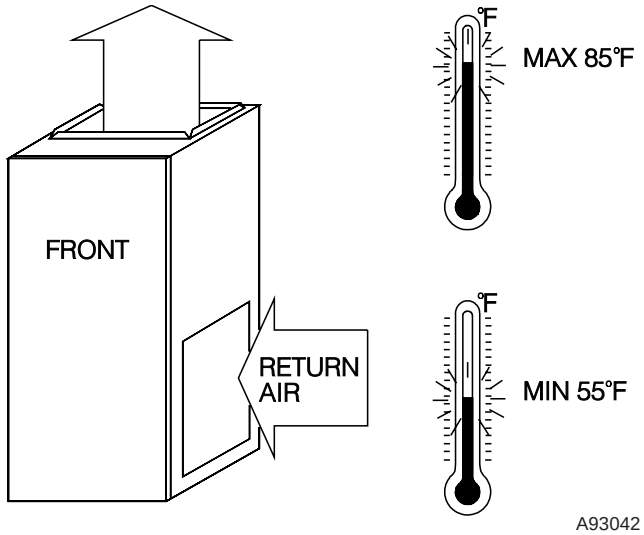


**Fig. 4—Return-Air Temperature**

controls into containers before touching ungrounded objects.

7. An ESD service kit (available from commercial sources) may also be used to prevent ESD damage.

**⚠ CAUTION**

**PROPERTY DAMAGE**
Failure to follow this caution may result in minor property damage.
Local codes may require a drain pan under entire furnace and condensate trap when a condensing furnace is used in an attic application or over a finished ceiling.

## APPLICATIONS

### Step 1—General

Some assembly and modifications are required for furnaces installed in any of the 4 applications shown in Fig. 1. All drain and pressure tubes are connected as shown in Fig. 6. See appropriate application instructions for these procedures.

### Step 2—Upflow Applications

An upflow furnace application is where furnace blower is located below combustion and controls section of furnace, and conditioned air is discharged upwards.

CONDENSATE TRAP LOCATION (FACTORY-SHIPPED ORIENTATION)

The condensate trap is factory installed in the blower shelf and factory connected for UPFLOW applications. A factory-supplied tube is used to extend the condensate trap drain connection to the desired furnace side for field drain attachment. See Condensate Trap Tubing (Factory-Shipped Orientation) section for drain tube extension details. (See Fig. 5.)

CONDENSATE TRAP TUBING (FACTORY-SHIPPED ORIENTATION)

**NOTE:** See Fig. 6 or tube routing label on main furnace door to confirm location of these tubes.

1. Collector Box Drain, Inducer Housing Drain, Relief Port, and Pressure Switch Tubes.
   These tubes should be factory attached to condensate trap and pressure switch ready for use in UPFLOW applications. These tubes can be identified by their connection location and also by a color label on each tube. These tubes are identified as follows: collector box drain tube (blue label), inducer housing drain tube (violet label or molded), relief port tube (green label), and pressure switch tube (pink label).
2. Condensate Trap Drain Tube
   The condensate trap drain connection must be extended for field attachment by doing the following:
   a. Determine location of field drain connection. (See Fig. 2 or 6.)

**NOTE:** If internal filter or side Filter/Media Cabinet is used, drain tube should be located to opposite side of casing from return duct attachment to assist in filter removal.

   b. Remove and discard casing drain hole plug button from desired side.
   c. Install drain tube coupling grommet (factory-supplied in loose parts bag) in selected casing hole.
   d. Slide drain tube coupling (factory-supplied in loose parts bag) through grommet ensuring long end of coupling faces blower.
   e. Cement 2 factory-supplied 1/2-in. street CPVC elbows to the rigid drain tube connection on the condensate trap. (See Fig. 6.) These elbows must be cemented together and cemented to condensate trap drain connection.

**NOTE:** Failure to use CPVC elbows may allow drain to kink and prevent draining.

   f. Connect larger diameter drain tube and clamp (factory-supplied in loose parts bag) to condensate trap and clamp securely.
   g. Route tube to coupling and cut to appropriate length.
   h. Attach tube to coupling and clamp securely.

CONDENSATE TRAP LOCATION (ALTERNATE UPFLOW ORIENTATION)

An alternate location for the condensate trap is the left-hand side of casing. (See Fig. 2 and 7.)

**NOTE:** If the alternate left-hand side of casing location is used, the factory-connected drain and relief port tubes must be disconnected and modified for attachment. See Condensate Trap Tubing (Alternate Upflow Orientation) section for tubing attachment.

To relocate condensate trap to the left-hand side, perform the following:

1. Remove 3 tubes connected to condensate trap.
2. Remove trap from blower shelf by gently pushing tabs inward and rotating trap.
3. Install casing hole filler cap (factory-supplied in loose parts bag) into blower shelf hole where trap was removed.

**⚠ WARNING**

→ **CARBON MONOXIDE POISONING HAZARD**
Failure to follow this warning could result in personal injury or death.
Casing hole filler cap must be installed in blower shelf hole when condensate trap is relocated.

4. Install condensate trap into left-hand side casing hole by inserting tube connection stubs through casing hole and rotating until tabs snap into locking position.
5. Fill unused condensate trap casing holes with plastic filler caps (factory-supplied in loose parts bag).

CONDENSATE TRAP TUBING (ALTERNATE UPFLOW ORIENTATION)

**NOTE:** See Fig. 7 or tube routing label on main furnace door to confirm location of these tubes.

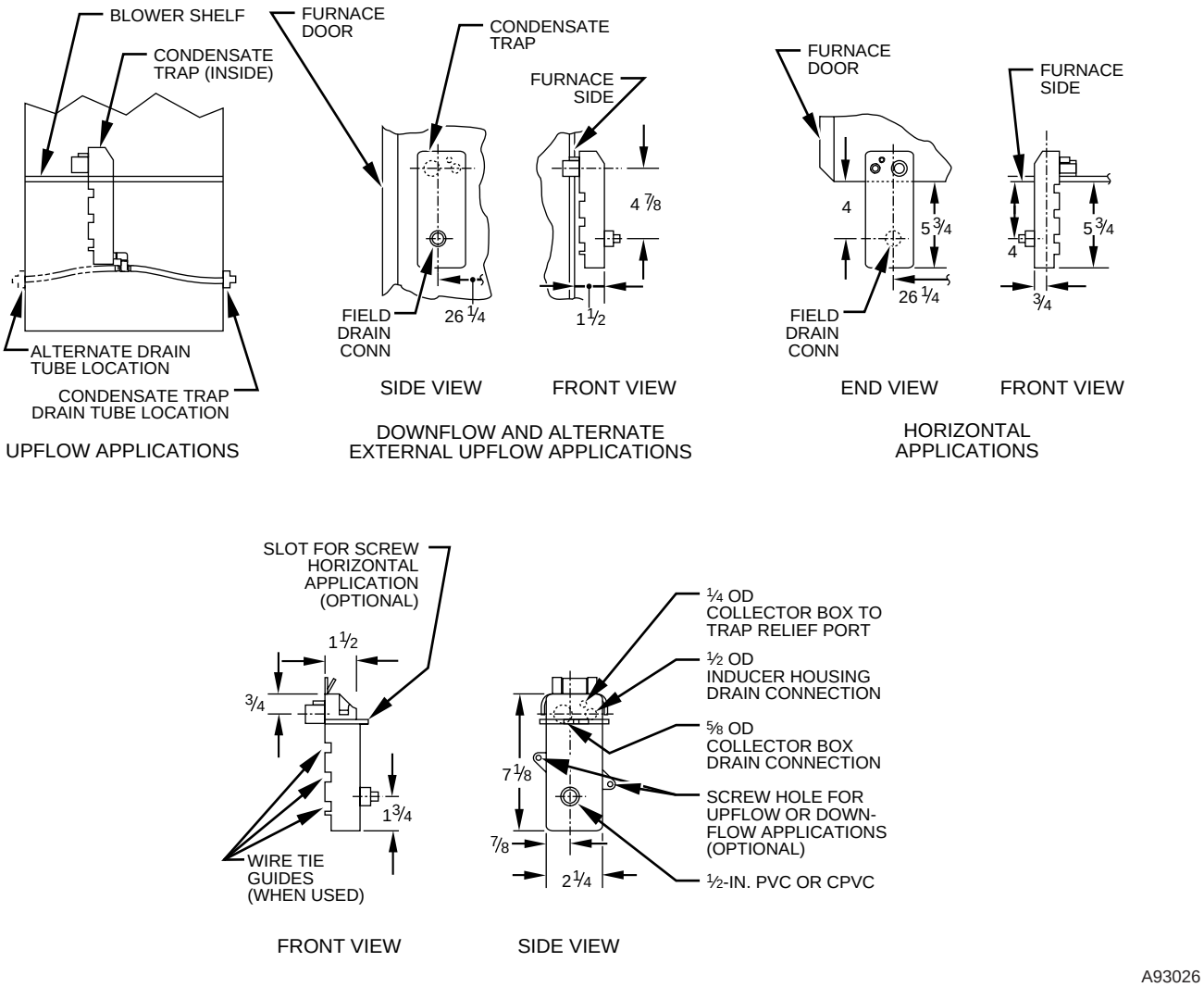


**Fig. 5—Condensate Trap**

1. Collector Box Drain Tube
   Connect collector box drain tube (blue label) to condensate trap.

**NOTE:** On 17-1/2 in. wide furnaces ONLY, cut tube between corrugated sections to prevent kinks from occurring.

2. Inducer Housing Drain Tube
   a. Remove and discard LOWER (molded) inducer housing drain tube which was previously connected to condensate trap.
   b. Use inducer housing drain extension tube (violet label and factory-supplied in loose parts bag) to connect LOWER inducer housing drain connection to the condensate trap.
   c. Determine appropriate length, cut, and connect tube.
   d. Clamp tube to prevent any condensate leakage.
3. Relief Port Tube
   a. Connect relief port tube (green label) to condensate trap.
   b. Extend this tube (if required) by splicing to small diameter tube (factory-supplied in loose parts bag).
   c. Determine appropriate length, cut, and connect tube.

CONDENSATE TRAP FIELD DRAIN ATTACHMENT

Refer to Condensate Drain section for recommendations and procedures.

PRESSURE SWITCH TUBING

The LOWER collector box pressure tube (pink label) is factory connected to the pressure switch and should not require any modification.

**NOTE:** See Fig. 6 or 7 or tube routing label on main furnace door to check for proper connections.

UPPER COLLECTOR BOX AND INDUCER HOUSING (UNUSED) DRAIN CONNECTIONS

Upper Collector Box Drain Connection

Attached to the UPPER collector box drain connection is a factory-installed corrugated, plugged tube (blue and white striped label). This tube is plugged to prevent condensate leakage in this application. Ensure this tube is plugged.

**NOTE:** See Fig. 6 or 7 or tube routing label on main furnace door to check for proper connections.

Upper Inducer Housing Drain Connection

Attached to the UPPER (unused) inducer housing drain connection is a cap and clamp. This cap is used to prevent condensate leakage in this application. Ensure this connection is capped.

**NOTE:** See Fig. 6 or 7 or tube routing label on main furnace door to check for proper connections.

CONDENSATE TRAP FREEZE PROTECTION

Refer to Condensate Drain Protection section for recommendations and procedures.

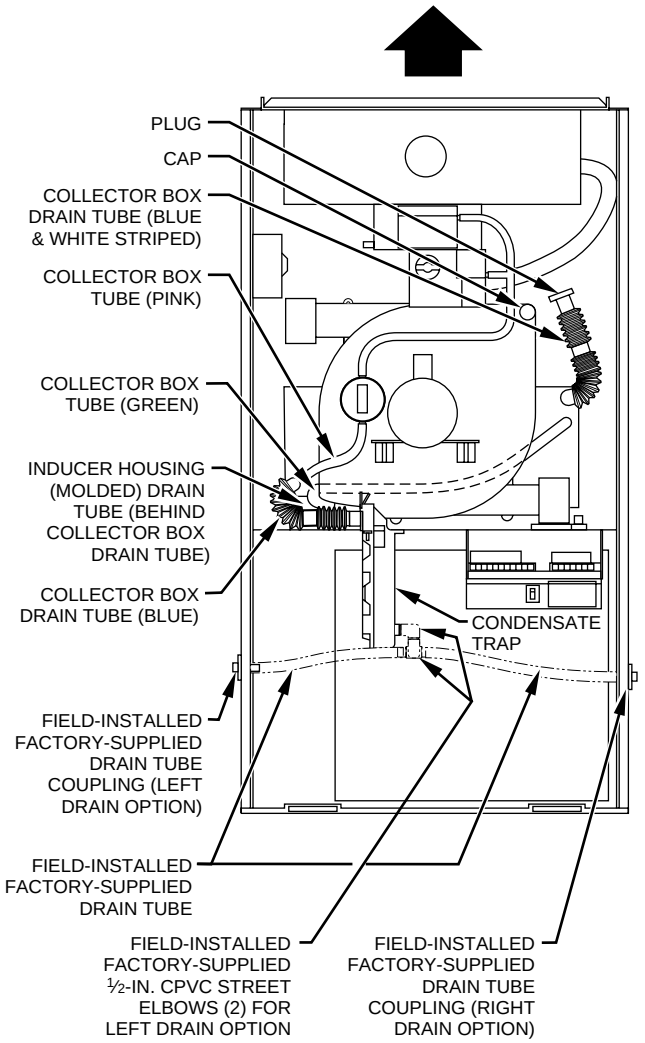


**Fig. 6—Factory-Shipped Upflow Tube Configuration (Shown with Blower Access Panel Removed)**

### Step 3—Downflow Applications

A downflow furnace application is where furnace blower is located above combustion and controls section of furnace, and conditioned air is discharged downwards.

CONDENSATE TRAP LOCATION

The condensate trap must be removed from the factory-installed blower shelf location and relocated in selected application location as shown in Fig. 2, 8, or 9.

To relocate condensate trap from the blower shelf to desired location, perform the following:

1. Remove 3 tubes connected to condensate trap.
2. Remove trap from blower shelf by gently pushing tabs inward and rotating trap.
3. Remove casing hole filler cap from casing hole. (See Fig. 2, 8, or 9.)
4. Install casing hole filler cap into blower shelf hole where trap was removed.

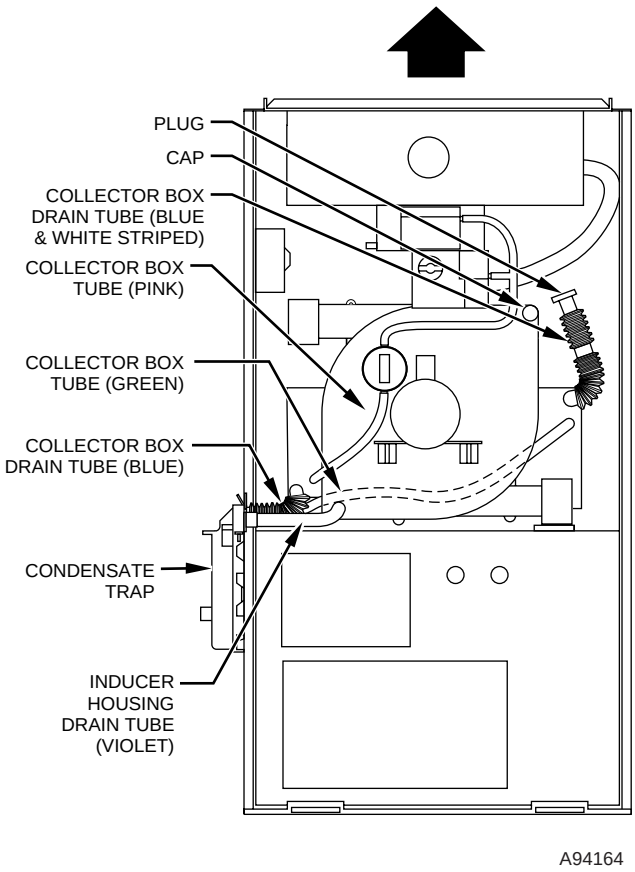


**Fig. 7—Alternate Upflow Configuration and Trap Location**

**⚠ WARNING**

→ **CARBON MONOXIDE POISONING HAZARD**
Failure to follow this warning could result in personal injury or death.
Casing hole filler cap must be installed in blower shelf hole when condensate trap is relocated.

5. Install condensate trap into desired casing hole by inserting tube connection stubs through casing hole and rotating until tabs snap into locking position.

CONDENSATE TRAP TUBING

**NOTE:** See Fig. 8 or 9 or tube routing label on main furnace door to check for proper connections.

Relocate tubes as described below.

1. Collector Box Drain Tube
   a. Remove factory-installed plug from LOWER collector box drain tube (blue and white striped label).
   b. Install removed clamp and plug into UPPER collector box drain tube (blue label) which was connected to condensate trap.
   c. Connect LOWER collector box drain connection to condensate trap.
      (1.) Condensate Trap Located on Left Side of Casing
         (a.) Connect LOWER collector box drain tube (blue and white striped label) to condensate trap. Tube does not need to be cut.
         (b.) Clamp tube to prevent any condensate leakage.

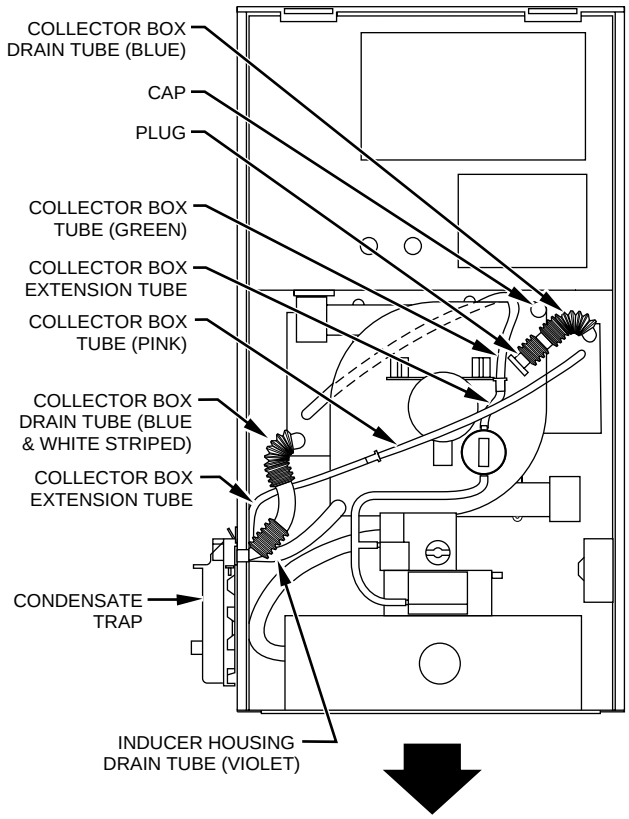


**Fig. 8—Downflow Tube Configuration (Left-Hand Trap Installation)**

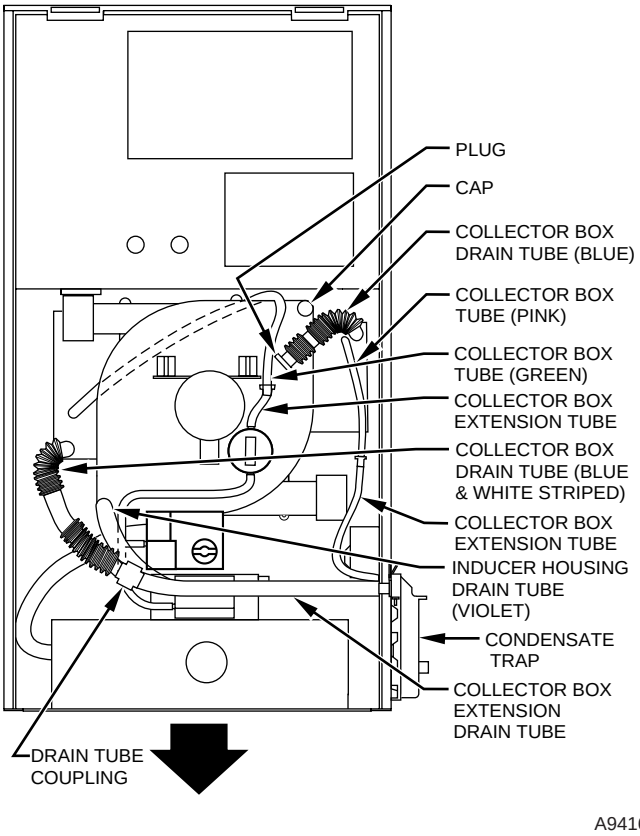


**Fig. 9—Downflow Tube Configuration (Right-Hand Trap Installation)**

(2.) Condensate Trap Located on Right Side of Casing

(a.) Install drain tube coupling (factory-supplied in loose parts bag) into collector box drain tube (blue and white striped label) which was previously plugged.

(b.) Connect larger diameter drain tube (factory-supplied in loose parts bag) to drain tube coupling, extending collector box drain tube for connection to condensate trap.

(c.) Route extended collector box drain tube directly from collector box drain to condensate trap as shown in Fig. 9.

(d.) Determine appropriate length and cut.

(e.) Connect to condensate trap.

(f.) Clamp tube to prevent any condensate leakage.

2. Inducer Housing Drain Tube

a. Remove factory-installed cap and clamp from LOWER inducer housing drain connection.

b. Remove and discard UPPER (molded) inducer housing drain tube which was previously connected to condensate trap.

c. Install cap and clamp on UPPER inducer housing drain connection where molded drain tube was removed.

d. Use inducer housing drain tube (violet label and factory-supplied in loose parts bag) to connect LOWER inducer housing drain connection to the condensate trap.

e. Connect inducer housing drain connection to condensate trap.

(1.) Condensate Trap Located on Left Side of Casing

(a.) Determine appropriate length and cut.

(b.) Connect tube to condensate trap.

(c.) Clamp tube to prevent any condensate leakage.

(2.) Condensate Trap Located on Right Side of Casing

(a.) Route inducer housing drain tube (violet label) directly from inducer housing to condensate trap as shown in Fig. 9.

(b.) Determine appropriate length and cut.

(c.) Connect tube to condensate trap.

(d.) Clamp tube to prevent any condensate leakage.

3. Relief Port Tube

Refer to Pressure Switch Tubing section for connection procedure.

CONDENSATE TRAP FIELD DRAIN ATTACHMENT

Refer to Condensate Drain section for recommendations and procedures.

PRESSURE SWITCH TUBING

One collector box pressure tube (pink label) is factory connected to the pressure switch for use when furnace is installed in UPFLOW applications. This tube MUST be disconnected and used for the condensate trap relief port tube. The other collector box pressure tube (green label) which was factory connected to the condensate trap relief port connection MUST be connected to the pressure switch in DOWNFLOW or HORIZONTAL RIGHT applications. **NOTE:** See Fig. 8 or 9 or tube routing label on main furnace door to check for proper connections.

1. Disconnect collector box pressure tube (pink label) attached to pressure switch.

2. Extend collector box pressure tube (green label) which was previously connected to condensate trap relief port connection by splicing to small diameter tube (factory-supplied in loose parts bag).

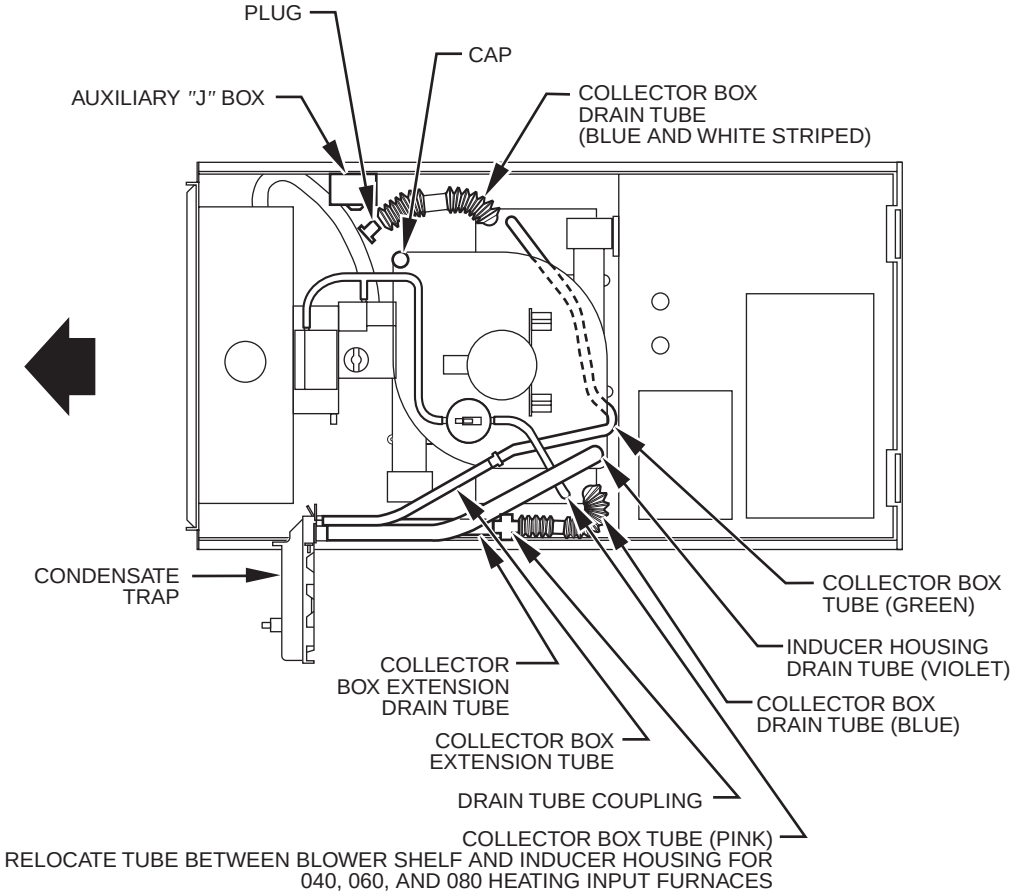


**Fig. 10—Horizontal Left Tube Configuration**

3. Connect collector box pressure tube (green label) to pressure switch connection labeled COLLECTOR BOX.
4. Extend collector box pressure tube (pink label) which was previously connected to pressure switch by splicing to remaining small diameter tube (factory-supplied in loose parts bag).
5. Route this extended tube (pink label) to condensate trap relief port connection.
6. Determine appropriate length, cut, and connect tube.
7. Clamp tube to relief port connection.

CONDENSATE TRAP FREEZE PROTECTION

Refer to Condensate Drain Protection section for recommendations and procedures.

### Step 4—Horizontal Left (Supply-Air Discharge) Applications

A horizontal left furnace application is where furnace blower is located to the right of combustion and controls section of furnace, and conditioned air is discharged to the left.

CONDENSATE TRAP LOCATION

The condensate trap must be removed from the factory-installed blower shelf location and relocated in selected application location as shown in Fig. 2 or 10.

To relocate condensate trap from the blower shelf to desired location, perform the following:

1. Remove 3 tubes connected to condensate trap.
2. Remove trap from blower shelf by gently pushing tabs inward and rotating trap.
3. Install casing hole filler cap (factory-supplied in loose parts bag) into blower shelf hole where trap was removed.

**⚠ WARNING**

→ **CARBON MONOXIDE POISONING HAZARD**
Failure to follow this warning could result in personal injury or death.
Casing filler cap must be installed in blower shelf hole when condensate trap is relocated.

4. Install condensate trap into left-hand side casing hole by inserting tube connection stubs through casing hole and rotating until tabs snap into locking position.
5. Fill unused condensate trap casing holes with plastic filler caps (factory-supplied in loose parts bag).

CONDENSATE TRAP TUBING

**NOTE:** See Fig. 10 or tube routing label on main furnace door to check for proper connections.

1. Collector Box Drain Tube
   a. Install drain tube coupling (factory-supplied in loose parts bag) into collector box drain tube (blue label) which was previously connected to condensate trap.
   b. Connect large diameter drain tube and clamp (factory-supplied in loose parts bag) to drain tube coupling, extending collector box drain tube.
   c. Route extended tube (blue label) to condensate trap and cut to appropriate length.
   d. Clamp tube to prevent any condensate leakage.
2. Inducer Housing Drain Tube
   a. Remove and discard LOWER (molded) inducer housing drain tube which was previously connected to condensate trap.

b. Use inducer housing drain extension tube (violet label and factory-supplied in loose parts bag) to connect LOWER inducer housing drain connection to the condensate trap.

c. Determine appropriate length, cut, and connect tube.

d. Clamp tube to prevent any condensate leakage.

3. Relief Port Tube

a. Extend collector box tube (green label) which was previously connected to the condensate trap by splicing to small diameter tube (factory-supplied in loose parts bag).

b. Route extended collector box pressure tube to relief port connection on the condensate trap.

c. Determine appropriate length, cut, and connect tube.

d. Clamp tube to prevent any condensate leakage.

CONDENSATE TRAP FIELD DRAIN ATTACHMENTS

Refer to Condensate Drain section for recommendations and procedures.

PRESSURE SWITCH TUBING

The LOWER collector box pressure tube (pink label) is factory connected to the pressure switch for use when furnace is installed in UPFLOW applications. This tube MUST be disconnected, extended, rerouted, and then reconnected to the pressure switch in HORIZONTAL LEFT applications.

**NOTE:** See Fig. 10 or tube routing label on main furnace door to check for proper connections.

Modify tube as described below.

1. Disconnect collector box pressure tube (pink label) attached to pressure switch.
2. Use smaller diameter tube (factory-supplied in loose parts bag) to extend tube disconnected in item 1.
3. Route extended tube:

a. Behind inducer housing.

b. Between blower shelf and inducer housing.

c. Behind inducer motor bracket.

d. Between inducer motor and pressure switch.

4. Determine appropriate length, cut, and reconnect tube to pressure switch connection labeled COLLECTOR BOX.

CONDENSATE TRAP FREEZE PROTECTION

Refer to Condensate Drain Protection section for recommendations and procedures.

CONSTRUCT A WORKING PLATFORM

Construct working platform where all required furnace clearances are met. (See Fig. 3 and 11.)

**⚠ CAUTION**

**UNIT MAY NOT OPERATE**
Failure to follow this caution may result in intermittent unit operation.
The condensate trap MUST be installed below furnace. See Fig. 5 for dimensions. The drain connection to condensate trap must also be properly sloped to an open drain.

**NOTE:** Combustion-air and vent pipes are restricted to a minimum length of 5 ft. (See Table 7.)

**NOTE:** A 12-in. minimum offset pipe section is recommended with short (5 to 8 ft) vent systems. This recommendation is to reduce excessive condensate droplets from exiting the vent pipe. (See Fig. 11 or 34.)

### Step 5—Horizontal Right (Supply-Air Discharge) Applications

A horizontal right furnace application is where furnace blower is located to the left of combustion and controls section of furnace, and conditioned air is discharged to the right.

**⚠ CAUTION**

**PROPERTY DAMAGE**
Failure to follow this caution may result in minor property damage.
Local codes may require a drain pan under entire furnace and condensate trap when a condensing furnace is used in attic application or over a finished ceiling.

**NOTE:** In Canada, installations shall be in accordance with current NSCNGPIC Installation Codes and/or local codes.

**NOTE:** The junction box (J-Box) MUST be relocated to opposite side of furnace casing. (See Fig. 12.) See Electrical Connection section for J-Box relocation.

CONDENSATE TRAP LOCATION

The condensate trap must be removed from the factory-installed blower shelf location and relocated in selected application location as shown in Fig. 2 or 12.

To relocate condensate trap from the blower shelf to desired location, perform the following:

1. Remove 3 tubes connected to condensate trap.
2. Remove trap from blower shelf by gently pushing tabs inward and rotating trap.
3. Install casing hole filler cap (factory-supplied in loose parts bag) into blower shelf hole where trap was removed.

**⚠ WARNING**

→ **CARBON MONOXIDE POISONING HAZARD**
Failure to follow this warning could result in personal injury or death.
Casing hole filler cap must be installed in blower shelf when condensate trap is relocated.

4. Install condensate trap into left-hand side casing hole by inserting tube connection stubs through casing hole and rotating until tabs snap into locking position.
5. Fill unused condensate trap casing holes with plastic filler caps (factory-supplied in loose parts bag).

CONDENSATE TRAP TUBING

**NOTE:** See Fig. 12 or tube routing label on main furnace door to check for proper connections.

1. Collector Box Drain Tube

a. Remove factory-installed plug from LOWER collector box drain tube (blue and white striped label).

b. Install removed clamp and plug into UPPER collector box drain tube (blue label) which was previously connected to condensate trap.

c. Connect LOWER collector box drain tube (blue and white striped label) to condensate trap. Tube does not need to be cut.

d. Clamp tube to prevent any condensate leakage.

2. Inducer Housing Drain Tube

a. Remove factory-installed cap and clamp from LOWER inducer housing drain connection.

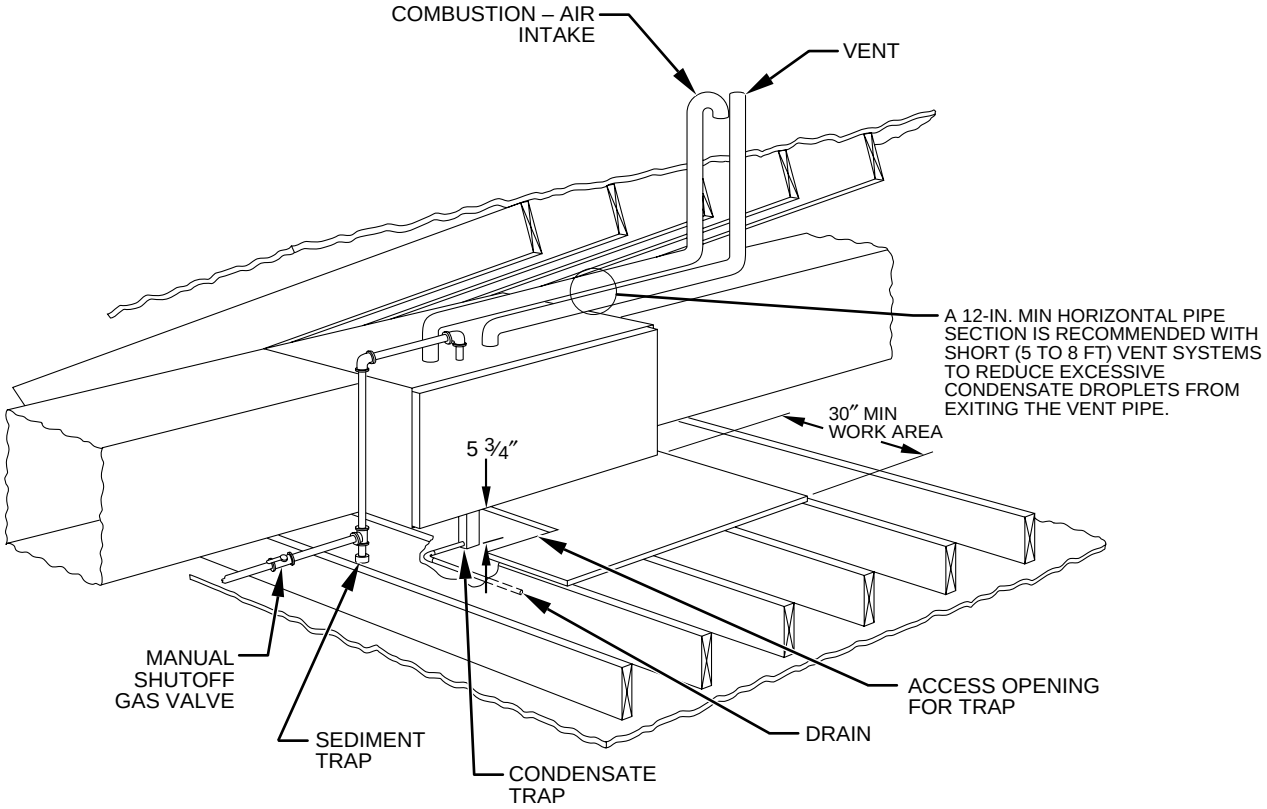


**NOTE:** LOCAL CODES MAY REQUIRE A DRAIN PAN UNDER THE FURNACE AND CONDENSATE TRAP WHEN A CONDENSING FURNACE IS INSTALLED ABOVE FINISHED CEILINGS.

A93031

**Fig. 11—Attic Location and Working Platform**

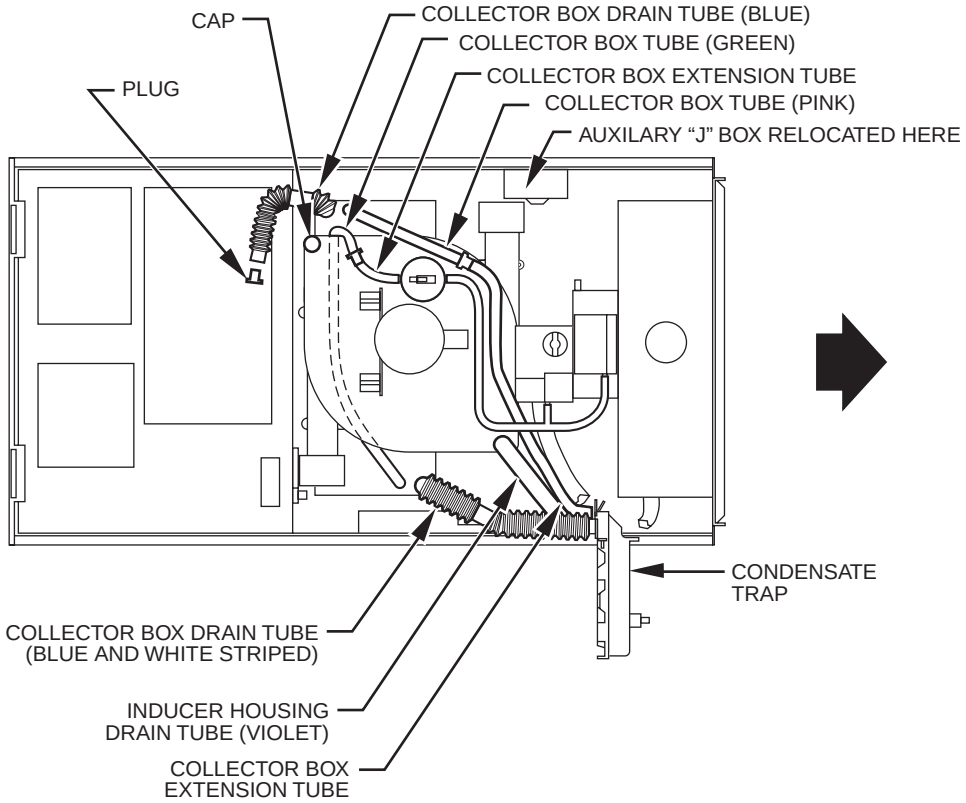


A00214

**Fig. 12—Horizontal Right Tube Configuration**

b. Remove and discard UPPER (molded) inducer housing drain tube which was previously connected to condensate trap.

c. Install cap and clamp on UPPER inducer housing drain connection where molded drain tube was removed.

d. Use inducer housing drain extension tube (violet label and factory-supplied in loose parts bag) to connect LOWER inducer housing drain connection to condensate trap.

e. Determine appropriate length, cut, and connect tube to condensate trap.

f. Clamp tube to prevent any condensate leakage.

3. Relief Port Tube
   Refer to Pressure Switch Tubing section for connection procedure.

CONDENSATE TRAP FIELD DRAIN ATTACHMENT

Refer to Condensate Drain section for recommendations and procedures.

PRESSURE SWITCH TUBING

One collector box pressure tube (pink label) is factory connected to the pressure switch for use when furnace is installed in UPFLOW applications. This tube MUST be disconnected and used for the condensate trap relief port tube. The other collector box pressure tube (green label) which was factory connected to the condensate trap relief port connection MUST be connected to the pressure switch in DOWNFLOW or HORIZONTAL RIGHT applications.

**NOTE:** See Fig. 12 or tube routing label on main furnace door to check for proper connections.
Relocate tubes as described below.

1. Disconnect collector box pressure tube (pink label) attached to pressure switch.
2. Extend collector box pressure tube (green label) which was previously connected to condensate trap relief port connection by splicing to small diameter tube (factory-supplied in loose parts bag).
3. Route extended collector box pressure tube behind inducer motor bracket then between inducer motor and pressure switch.
4. Connect collector box pressure tube (green label) to pressure switch connection labeled COLLECTOR BOX.
5. Use remaining smaller diameter tube (factory-supplied in loose parts bag) to extend collector box pressure tube (pink label) which was previously connected to pressure switch.
6. Route this extended tube (pink label) to condensate trap relief port connection.
7. Determine appropriate length, cut, and connect tube.
8. Clamp tube to relief port connection.

CONDENSATE TRAP FREEZE PROTECTION

Refer to Condensate Drain Protection section for recommendations and procedures.

CONSTRUCT A WORKING PLATFORM

Construct working platform where all required furnace clearances are met. (See Fig. 3 and 11.)

**⚠ CAUTION**

**UNIT MAY NOT OPERATE**
Failure to follow this caution may result in intermittent unit operation.
The condensate trap MUST be installed below furnace. See Fig. 5 for dimensions. The drain connection to condensate trap must also be properly sloped to an open drain.

**NOTE:** Combustion-air and vent pipes are restricted to a minimum length of 5 ft. (See Table 7.)

**NOTE:** A 12-in. minimum offset pipe section is recommended with short (5 to 8 ft) vent systems. This recommendation is to reduce excessive condensate droplets from exiting the vent pipe. (See Fig. 11 or 34.)

## LOCATION

### Step 1—General

This furnace must

- be installed so the electrical components are protected from water.
- not be installed directly on any combustible material other than wood flooring (refer to SAFETY CONSIDERATIONS).
- be located so combustion-air and vent pipe maximum lengths are not exceeded. Refer to Table 7.
- be located where available electric power and gas supplies meet specifications on the furnace rating plate.
- be attached to an air distribution system and be located as close to the center of the distribution system as possible. Refer to Air Ducts section.
- be provided with ample space for servicing and cleaning. Always comply with minimum fire protection clearances shown on the furnace clearance-to-combustibles label.

This furnace may be located in a confined space without special provisions for dilution or ventilation air.

When a furnace is installed so that supply ducts carry air circulated by the furnace to areas outside the space containing the furnace, the return air shall also be handled by ducts sealed to furnace casing. The ducts terminate outside the space containing the furnace to ensure there will not be a negative pressure condition within equipment room or space.

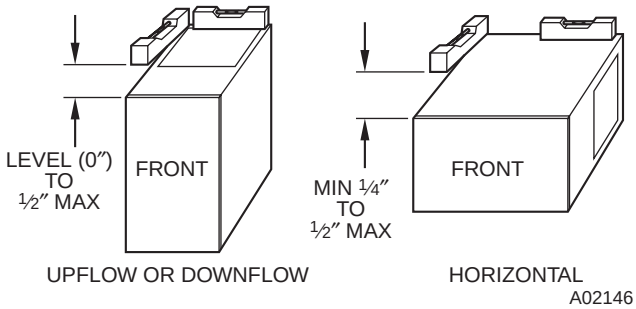


**Fig. 13—Furnace Location for Proper Condensate Drainage**

**NOTE:** For upflow/downflow applications install furnace so that it is level or pitched forward within 1/2-in. for proper furnace operation. For horizontal applications pitch 1/4-in. minimum to 1/2-in. maximum forward to ensure proper condensate drainage from secondary heat exchangers. (See Fig. 13.)

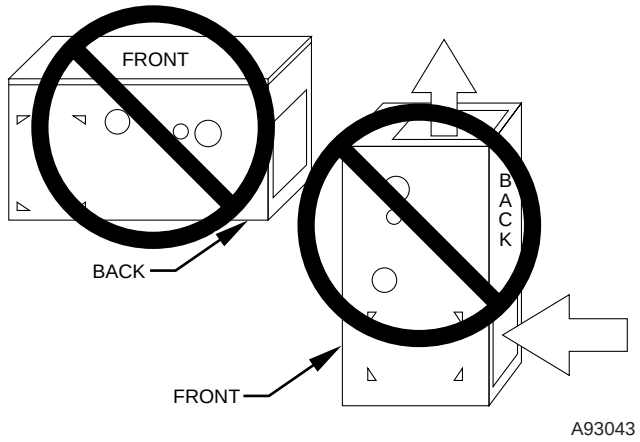


**Fig. 14—Prohibit Installation on Back**

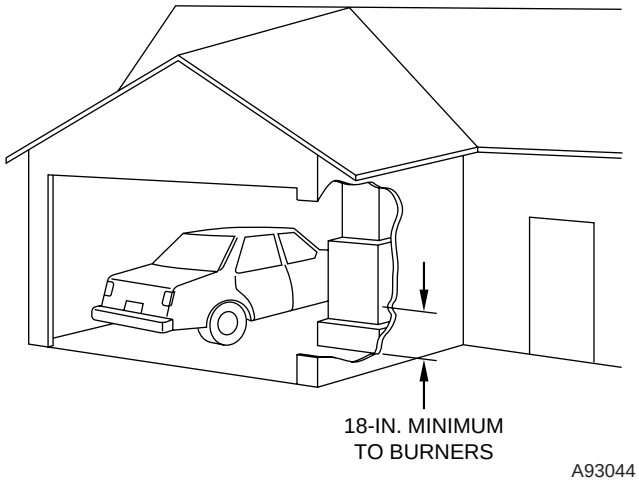


**Fig. 16—Installation in a Garage**

**⚠ WARNING**

→ **FIRE HAZARD**
Failure to follow this warning could result in fire of designed unit operation injury, or death.
Do not install furnace on its back. Safety control operation will be adversely affected. Never connect return-air ducts to back of furnace. (See Fig. 14.)

**⚠ CAUTION**

→ **UNIT DAMAGE HAZARD**
This gas furnace may be used for construction heat provided that:
-The furnace is permanently installed with all electrical wiring, piping, venting and ducting installed according to these installation instructions. A return air duct is provided, sealed to the furnace casing, and terminated outside the space containing the furnace. This prevents a negative pressure condition as created by the circulating air blower, causing a flame rollout and/or drawing combustion products into the structure.
-The furnace is controlled by a thermostat. It may not be ″hot wired″ to provide heat continuously to the structure without thermostatic control.
-Clean outside air is provided for combustion. This is to minimize the corrosive effects of adhesives, sealers and other construction materials. It also prevents the entrainment of drywall dust into combustion air, which can cause fouling and plugging of furnace components.
-The temperature of the return air to the furnace is no less than 55°F, with no evening setback or shutdown. The use of the furnace while the structure is under construction is deemed to be intermittent operation per our installation instructions.
-The air temperature rise is within the rated rise range on the furnace rating plate, and the firing rate has been set to the nameplate value.
-The filters used to clean the circulating air during the construction process must be either changed or thoroughly cleaned prior to occupancy.
-The furnace, ductwork and filters are cleaned as necessary to remove drywall dust and construction debris from all HVAC system components after construction is completed.

**⚠ CAUTION**

**UNIT DAMAGE HAZARD**
Failure to follow this caution may result in minor property or unit damage.
If furnace is installed in an unconditioned space where the ambient temperatures may be 32°F or lower, freeze protection measures must be taken. (See Fig. 15.)

### Step 2—Furnace Location Relative to Cooling Equipment

The cooling coil must be installed parallel with or on downstream side of furnace to avoid condensation in heat exchanger. When installed parallel with a furnace, dampers or other means used to control flow of air shall be adequate to prevent chilled air from entering furnace. If dampers are manually operated, they must be equipped with a means to prevent operation of either unit, unless damper is in full-heat or full-cool position.

### Step 3—Hazardous Locations

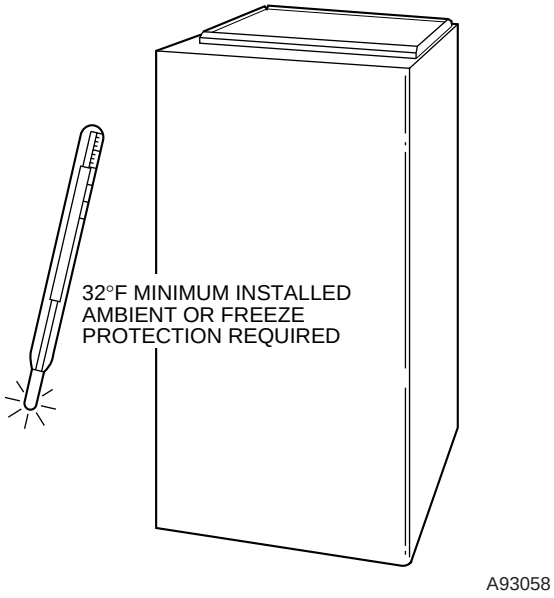


**Fig. 15—Freeze Protection**

**⚠ WARNING**

→ **FIRE, EXPLOSION, INJURY OR DEATH HAZARD**
Improper location or inadequate protection could result in fire or explosion.
When furnace is installed in a residential garage, it must be installed so that burners and ignition sources are located a minimum of 18 in. above floor. The furnace must be located or protected to avoid physical damage by vehicles. When furnace is installed in a public garage, airplane hangar, or other building having a hazardous atmosphere, the furnace must be installed in accordance with NFGC or NSCNGPIC. (See Fig. 16.)

## INSTALLATION

### Step 1—Leveling Legs (If Desired)

When furnace is used in upflow position with side inlet(s), leveling legs may be desired. (See Fig. 17.) Install field-supplied, corrosion-resistant 5/16-in. machine bolts and nuts.

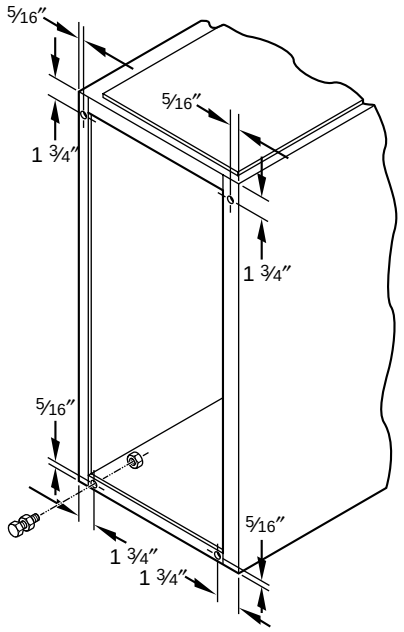


A89014

**Fig. 17—Leveling Legs**

**NOTE:** The maximum length of bolt should not exceed 1-1/2 in.

1. Position furnace on its back. Locate and drill a 5/16–in. diameter hole in each bottom corner of furnace. (See Fig. 17.) Holes in bottom closure panel may be used as guide locations.
2. For each hole, install nut on bolt and then install bolt and nut in hole. (Install flat washer if desired.)
3. Install another nut on other side of furnace base. (Install flat washer if desired.)
4. Adjust outside nut to provide desired height, and tighten inside nut to secure arrangement.

**NOTE:** Bottom closure must be used when leveling legs are used. See Bottom Closure Panel section.

### Step 2—Installation in Upflow and Downflow Applications

**NOTE:** For downflow applications, this furnace is approved for use on combustible flooring when special base (available from manufacturer) Part No. KGASB0201ALL is used. Special base is not required when this furnace is installed on manufacturer's Coil Assembly Part No. CD5 or CK5, or Coil Box Part No. KCAKC is used.

1. Determine application being installed from Table 1.
2. Construct hole in floor per dimensions specified in Table 1 and Fig. 18.
3. Construct plenum to dimensions specified in Table 1 and Fig. 18.
4. If downflow subbase (KGASB) is used, install as shown in Fig. 19.
   If Coil Assembly Part No. CD5 or CK5 or Coil Box Part No. KCAKC is used, install as shown in Fig. 20.

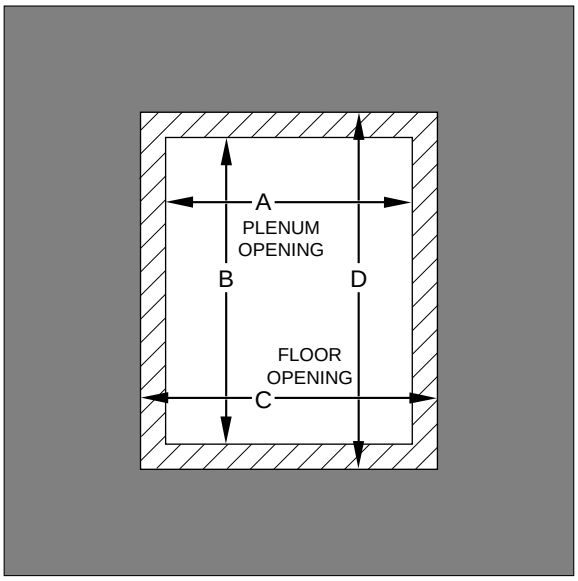


A96283

**Fig. 18—Floor and Plenum Opening Dimensions**

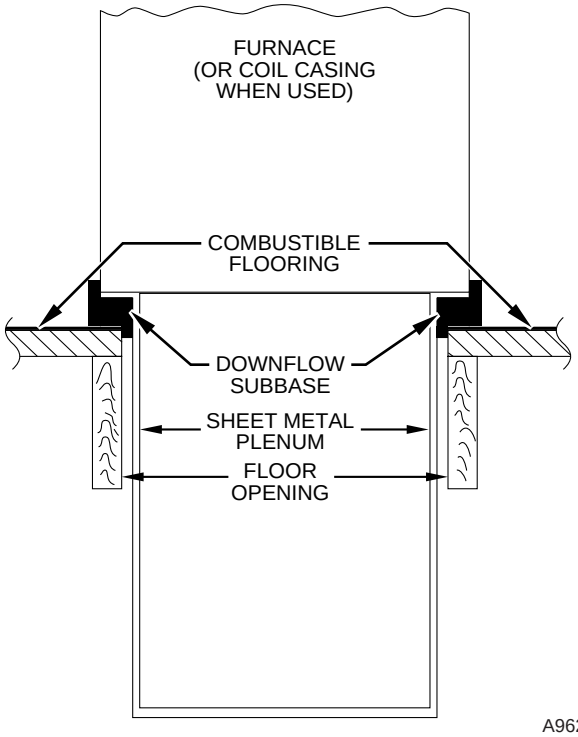


A96285

**Fig. 19—Furnace, Plenum, and Subbase Installed on a Combustible Floor**

**NOTE:** Remove furnace perforated, discharge duct flanges when they interfere with mating flanges on coil on downflow subbase. To remove furnace perforated, discharge duct flange, use wide

**Table 1—Opening Dimensions (in.)**

| FURNACE CASING WIDTH | APPLICATION | PLENUM OPENING | | FLOOR OPENING | |
|---|---|---|---|---|---|
| | | A | B | C | D |
| 17-1/2 | Upflow Applications | 16 | 24–1/8 | 16–5/8 | 24–3/4 |
| | Downflow Applications on Non-Combustible Flooring | 15-7/8 | 19 | 16-1/2 | 19-5/8 |
| | Downflow Applications on Combustible Flooring Using KGASB Subbase Furnace with or without CD5 or CK5 Coil Assembly or KCAKC Coil Box | 15-1/8 | 19 | 16-3/4 | 20-3/8 |
| | Downflow Applications on Combustible Flooring NOT Using KGASB Subbase Furnace with or without CD5 or CK5 Coil Assembly or KCAKC Coil Box | 15-1/2 | 19 | 16-1/2 | 20 |
| 21 | Upflow Applications | 19-1/2 | 24-1/8 | 20-1/8 | 24-3/4 |
| | Downflow Applications on Non-Combustible Flooring | 19-3/8 | 19 | 20 | 19-5/8 |
| | Downflow Applications on Combustible Flooring Using KGASB Subbase Furnace with or without CD5 or CK5 Coil Assembly or KCAKC Coil Box | 18-5/8 | 19 | 20-1/4 | 20-3/8 |
| | Downflow Applications on Combustible Flooring NOT Using KGASB Subbase Furnace with or without CD5 or CK5 Coil Assembly or KCAKC Coil Box | 19 | 19 | 20 | 20 |
| 24-1/2 | Upflow Applications | 23 | 24-1/8 | 23-5/8 | 24-3/4 |
| | Downflow Applications on Non-Combustible Flooring | 22-7/8 | 19 | 23-1/2 | 19-5/8 |
| | Downflow Applications on Combustible Flooring Using KGASB Subbase Furnace with or without CD5 or CK5 Coil Assembly or KCAKC Coil Box | 22-1/8 | 19 | 23-3/4 | 20-3/8 |
| | Downflow Applications on Combustible Flooring NOT Using KGASB Subbase Furnace with or without CD5 or CK5 Coil Assembly or KCAKC Coil Box | 22-1/2 | 19 | 23-1/2 | 20 |

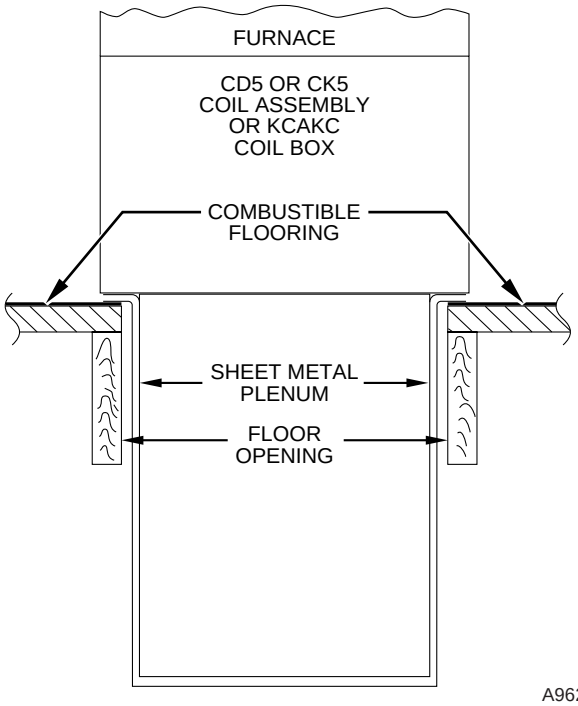


**Fig. 20—Furnace, Plenum, and Coil Assembly or Coil Box Installed on a Combustible Floor**

duct pliers or duct flange tool or hand seamers to bend flange back and forth until it breaks off. Be careful of sharp edges. (See Fig. 21.)

**⚠ CAUTION**

→ **UNIT MAY NOT OPERATE**
Failure to follow this caution may result in intermittent unit operation.
Do not bend duct flanges inward as shown in Fig. 21. This will affect airflow across heat exchangers and may cause limit cycling or premature heat exchanger failure. Remove duct flange completely or bend it inward a minimum of 210° as shown in Fig. 21.

**NOTE:** For 140 size unit when installed in downflow orientation, cut the white jumper wire off between terminals PL1-7 and PL1-9. Do not cut white jumper between terminals PL1-7 and PLI-11. Refer to Fig. 30 for location of jumper. Cut jumper close to connector and remove wire to avoid a short circuit.

### Step 3—Installation in Horizontal Applications

**⚠ CAUTION**

**UNIT MAY NOT OPERATE**
Failure to follow this caution may result in intermittent unit operation.
The entire length of furnace MUST be supported when furnace is used in a horizontal position to ensure proper draining. When suspended, bottom brace supports sides and center blower shelf. When unit is supported from the ground, blocks or pad should support sides and center blower shelf area.

These furnaces can be installed horizontally in either horizontal left or right discharge position. In a crawlspace, furnace can either be hung from floor joist or installed on suitable blocks or pad. Furnace can be suspended from each corner by hanger bolts and

angle iron supports. (See Fig. 22.) Cut hanger bolts (4 each 3/8-in. all-thread rod) to desired length. Use 1 X 3/8-in. flat washers, 3/8-in. lock washers, and 3/8-in. nuts on hanger rods as shown in Fig. 22. Dimples are provided for hole locations. (See Fig. 2.)

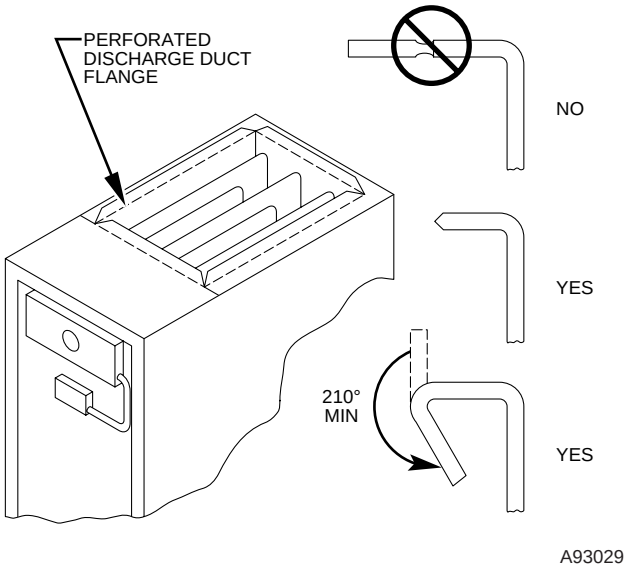


**Fig. 21—Duct Flanges**

### Step 4—Air Ducts

GENERAL REQUIREMENTS

The duct system should be designed and sized according to accepted national standards such as those published by: Air Conditioning Contractors Association (ACCA), Sheet Metal and Air Conditioning Contractors National Association (SMACNA) or American Society of Heating, Refrigerating and Air Conditioning Engineers (ASHRAE) or consult *The Air Systems Design Guidelines* reference tables available from your local distributor. The duct system should be sized to handle the required system design CFM at the design static pressure.

When a furnace is installed so that the supply ducts carry air circulated by the furnace to areas outside the space containing the furnace, the return air shall also be handled by a duct(s) sealed to the furnace casing and terminating outside the space containing the furnace.

Secure ductwork with proper fasteners for type of ductwork used. Seal supply- and return-duct connections to furnace with code approved tape or duct sealer.

Flexible connections should be used between ductwork and furnace to prevent transmission of vibration. Ductwork passing through unconditioned space should be insulated to enhance system performance. When air conditioning is used, a vapor barrier is recommended.

Maintain a 1-in. clearance from combustible materials to supply air ductwork for a distance of 36-in. horizontally from the furnace. See NFPA 90B or local code for further requirements.

For a furnace not equipped with a cooling coil, the outlet duct shall be provided with a removable access panel. This opening shall be accessible when the furnace is installed and shall be of such a size that the heat exchanger can be viewed for possible openings using light assistance or a probe can be inserted for sampling the air stream. The cover attachment shall prevent leaks.

DUCTWORK ACOUSTICAL TREATMENT

Metal duct systems that do not have a 90 degree elbow and 10 ft of main duct to the first branch take-off may require internal acoustical lining. As an alternative, fibrous ductwork may be used if constructed and installed in accordance with the latest edition of SMACNA construction 18 standard on fibrous glass ducts. Both acoustical lining and fibrous ductwork shall comply with NFPA 90B as tested by UL Standard 181 for Class 1 Rigid air ducts.

SUPPLY AIR CONNECTIONS

Upflow Furnaces

Connect supply-air duct to 3/4-in. flange on furnace supply-air outlet. The supply-air duct attachment must be connected to ONLY furnace supply-/outlet-air duct flanges or air conditioning coil casing (when used). DO NOT cut main furnace casing to attach supply side air duct, humidifier, or other accessories. All accessories MUST be connected external to furnace main casing.

Downflow Furnaces

Connect supply-air duct to supply-air opening on furnace. The supply-air duct attachment must be connected to ONLY furnace supply/outlet or air conditioning coil casing (when used), when installed on non-combustible material. When installed on combustible material, supply-air duct attachment must be connected to ONLY an accessory subbase or factory approved air conditioning coil casing. DO NOT cut main furnace casing to attach supply side air duct, humidifier, or other accessories. All accessories MUST be connected external to furnace main casing. Supply air opening duct flanges must be modified per Fig. 21.

Horizontal Furnaces

Connect supply-air duct to supply air opening on furnace. The supply-air duct attachment must be connected to ONLY furnace supply/outlet or air conditioning coil casing (when used). DO NOT cut main furnace casing to attach supply side air duct, humidifier, or other accessories. All accessories MUST be connected external to furnace main casing.

RETURN AIR CONNECTIONS

The furnace and its return air system shall be designed and installed so that negative pressure created by the air circulating fan cannot affect another appliance's combustion air supply or act to mix products of combustion with circulating air. The air circulating fan of the furnace, if installed in an enclosure communicating with another fuel-burning appliance not of the direct-vent type, shall be operable only when any door or panel covering an opening in the furnace fan compartment or in a return air plenum on ducts is in the closed position.

**⚠ WARNING**

**FIRE HAZARD**

A failure to follow this warning could result in fire, personal injury, or death.

Never connect return-air ducts to the back of the furnace. Return-air duct connections on furnace side(s) permitted in upflow applications only.

Upflow Furnaces

The return-air duct must be connected to bottom, sides (left or right), or a combination of bottom and side(s) of main furnace casing as shown in Fig. 2. Bypass humidifier may be attached into unused side return air portion of the furnace casing. DO NOT connect any portion of return-air duct to back of furnace casing.

Downflow and Horizontal Furnaces

The return-air duct must be connected to end inlet opening provided as shown in Fig. 2. DO NOT cut into casing sides or back to attach any portion of return-air duct. Bypass humidifier connections should be made at ductwork or coil casing sides exterior to furnace.

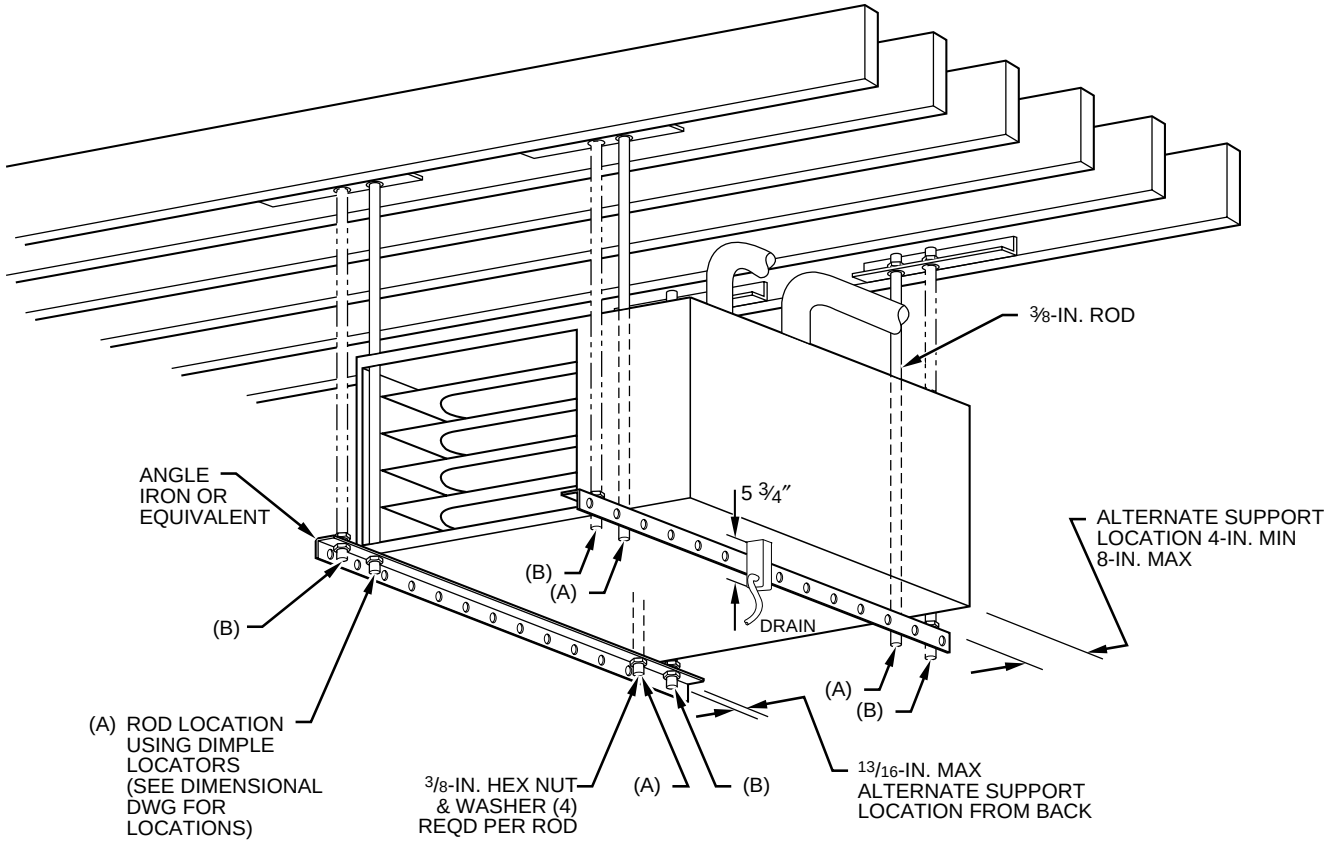


(A) PREFERRED ROD LOCATION

(B) ALTERNATE ROD LOCATION

**NOTES:** 1. A 1 In. clearance minimum between top of furnace and combustible material.

2. The entire length of furnace must be supported when furnace is used in horizontal position to ensure proper drainage.

A93304

**Fig. 22—Crawlspace Horizontal Application**

### Step 5—Filter Arrangement

**⚠ WARNING**

**FIRE, CARBON MONOXIDE AND POISONING HAZARD**

Failure to follow this warning could result in fire, personal injury, or death.

Never operate furnace without a filter or with filter access door removed.

The air filter arrangement will vary due to application, furnace orientation, and filter type. The filter may be installed in an external Filter/Media cabinet (if provided) or the furnace blower compartment. Factory supplied washable filters are shipped in the blower compartment.

If a factory-supplied external Filter/Media cabinet is provided, instructions for its application, assembly, and installation are packaged with the cabinet. The Filter/Media cabinet can be used with the factory-supplied washable filter or a factory-specified high-efficiency disposable filter (see cabinet instructions).

If installing the filter in the furnace blower compartment, determine location for filter and relocate filter retaining wire, if necessary. See Table 2 to determine correct filter size for desired filter location. Table 2 indicates filter size, location, and quantity shipped with this furnace. See Fig. 2 for location and size of bottom and side return-air openings.

**⚠ CAUTION**

**CUT HAZARD**

Failure to follow this caution may result in minor personal injury.

Use care when cutting support rods in filters to protect against flying pieces and sharp rod ends. Wear safety glasses, gloves, and appropriate protective clothing.

**⚠ CAUTION**

**UNIT MAY NOT OPERATE**

Failure to follow this caution may result in intermittent unit operation.

For airflow requirements above 1800 CFM, see Air Delivery table in Product Data literature for specific use of single side inlets. The use of both side inlets, a combination of 1 side and the bottom, or the bottom only will ensure adequate return air openings for airflow requirements above 1800 CFM.

**NOTE:** Side return-air openings can ONLY be used in UPFLOW configurations. Install filter(s) as shown in Fig. 23. Bottom return-air opening may be used with all 4 orientations. Filter may need to be cut to fit some furnace widths. Install filter as shown in Fig. 24.

**NOTE:** Remove and discard bottom closure panel when bottom inlet is used.

## Table 2—Filter Information

| AIR FILTER LOCATED IN BLOWER COMPARTMENT | | | |
|---|---|---|---|
| **FURNACE CASING WIDTH (IN.)** | FILTER SIZE (IN.) | | FILTER TYPE |
| | Side Return | Bottom Return | |
| **17–1/2** | (1) 16 X 25 X 1† | (1) 16 X 25 X 1† | Cleanable |
| **21** | (1) 16 X 25 X 1* | (1) 20 X 25 X 1† | Cleanable |
| **24–1/2** | (1 or 2) 16 X 25 X 1* | (1) 24 X 25 X 1† | Cleanable |

* Filters may be field modified by cutting filter material and support rods (3) in filters. Alternate sizes and additional filters may be ordered from your dealer.
† Factory-provided with furnace.

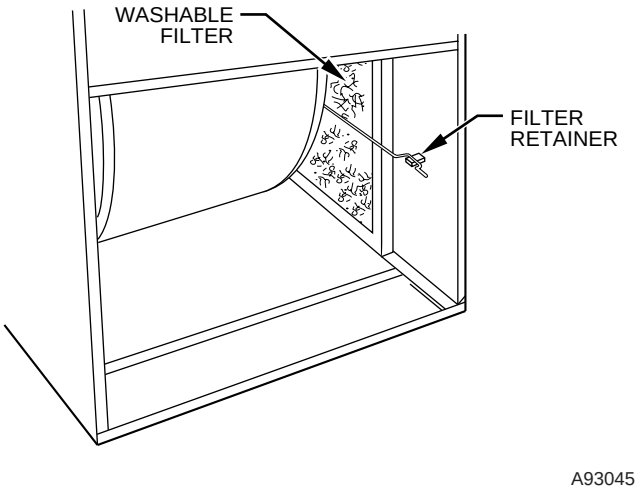


**Fig. 23—Filter Installed for Side Inlet**

### Step 6—Bottom Closure Panel

These furnaces are shipped with bottom enclosure panel installed in bottom return-air opening. This panel MUST be in place when side return air is used.

To remove bottom closure panel, perform following:

1. Tilt or raise furnace and remove 2 screws holding front filler panel. (See Fig. 25.)
2. Rotate front filler panel downward to release holding tabs.
3. Remove bottom closure panel.
4. Reinstall front filler panel and screws.

### Step 7—Gas Piping

Gas piping must be installed in accordance with national and local codes. Refer to current edition of NFGC in the United States. Canadian installations must be made in accordance with NSCNG-PIC and all authorities having jurisdiction.

Gas supply line should be a separate line running directly from meter to furnace, if possible. Refer to Table 3 for recommended gas pipe sizing. Risers must be used to connect to furnace and to meter. Support all gas piping with appropriate straps, hangers, etc. Use a minimum of 1 hanger every 6 ft. Joint compound (pipe dope) should be applied sparingly and only to male threads of joints. Pipe dope must be resistant to propane gas.

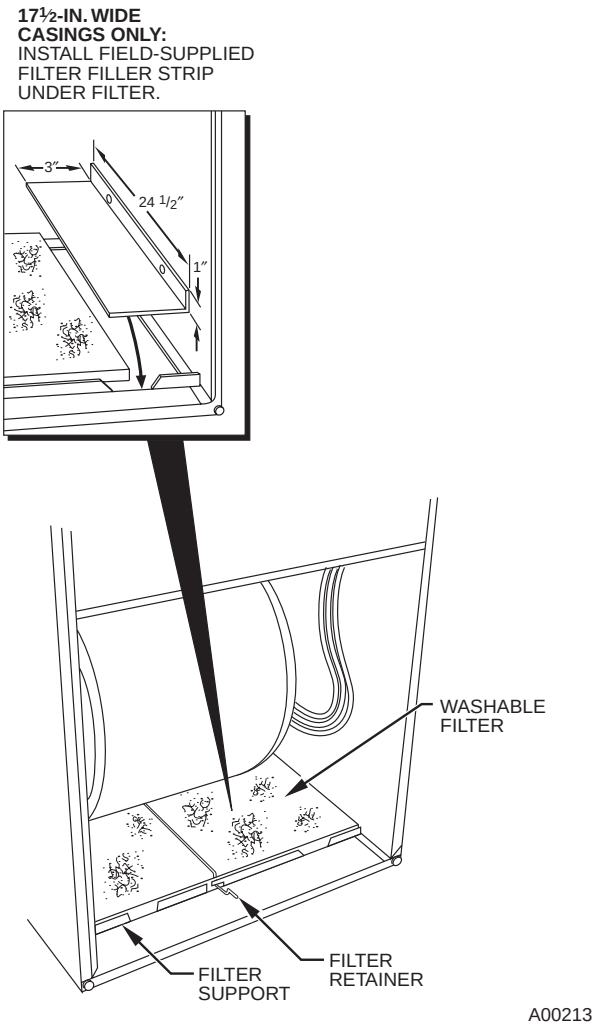


**Fig. 24—Bottom Filter Arrangement**

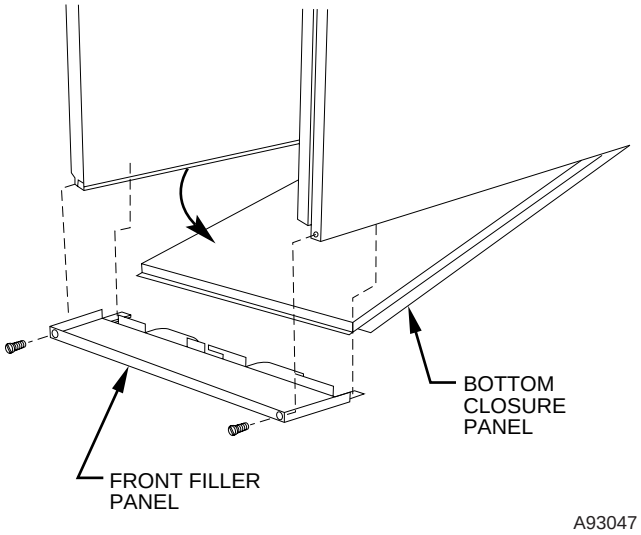


**Fig. 25—Removing Bottom Closure Panel**

### Table 3—Maximum Capacity of Pipe*

| NOMINAL IRON PIPE SIZE (IN.) | INTERNAL DIAMETER (IN.) | LENGTH OF PIPE (FT) | | | | |
|---|---|---|---|---|---|---|
| | | 10 | 20 | 30 | 40 | 50 |
| **1/2** | 0.622 | 175 | 120 | 97 | 82 | 73 |
| **3/4** | 0.824 | 360 | 250 | 200 | 170 | 151 |
| **1** | 1.049 | 680 | 465 | 375 | 320 | 285 |
| **1-1/4** | 1.380 | 1400 | 950 | 770 | 660 | 580 |
| **1-1/2** | 1.610 | 2100 | 1460 | 1180 | 990 | 900 |

* Cubic ft of gas per hr for gas pressures of 0.5 psig (14–in. wc) or less and a pressure drop of 0.5–in wc (based on a 0.60 specific gravity gas).
Ref: Table 9.2 NFGC.

**⚠ WARNING**

**FIRE OR EXPLOSION HAZARD**
Failure to follow this warning could result in fire, explosion, personal injury, or death.
-Connect gas pipe to furnace using a backup wrench to avoid damaging gas controls.
-Gas valve shutoff switch MUST be facing forward or tilted upward.
-Never purge a gas line into a combustion chamber. Never test for gas leaks with an open flame. Use a commercially available soap solution made specifically for the detection of leaks to check all connections.
-Use proper length of pipe to avoid stress on gas control manifold.
-If a flexible connector is required or allowed by authority having jurisdiction, black iron pipe shall be installed at furnace gas valve and extend a minimum of 2 in. outside furnace casing.

Install a sediment trap in riser leading to furnace. Trap can be installed by connecting a tee to riser leading to furnace so straight-through section of tee is vertical. Then connect a capped nipple into lower end of tee. Capped nipple should extend below level of gas controls. Place a ground joint union between gas control manifold and manual gas shutoff valve. (See Fig. 26.)

If local codes allow the use of a flexible gas appliance connector, always use a new listed connector. Do not use a connector which has previously served another gas appliance.

**⚠ WARNING**

**FIRE OR EXPLOSION HAZARD**
Failure to follow the safety warnings exactly could result in serious injury, death or property damage.
Never test for gas leaks with an open flame. Use a commercially available soap solution made specifically for the detection of leaks to check all connections. A fire or explosion could result causing property damage, personal injury or loss of life.

An accessible manual shutoff valve MUST be installed external to furnace casing and within 6 ft of furnace. A 1/8-in. NPT plugged tapping, accessible for test gage connection, MUST be installed immediately upstream of gas supply connection to furnace and downstream of manual shutoff valve.

**NOTE:** The gas valve inlet pressure tap connection is suitable to use as test gauge connection providing test pressure DOES NOT exceed maximum 0.5 psig (14-in. wc) stated on gas control valve. (See Fig. 57.)

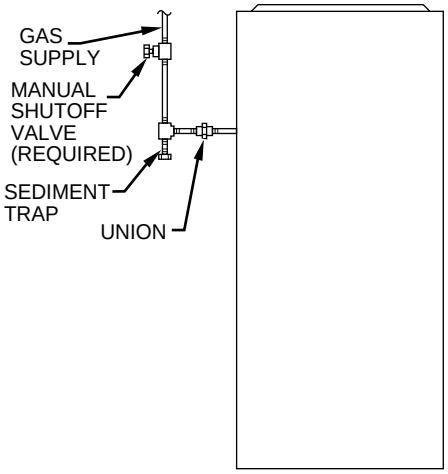


**Fig. 26—Typical Gas Pipe Arrangement**

Piping should be pressure and leak tested in accordance with NFGC in the United States or NSCNGPIC in Canada, local, and national plumbing and gas codes before the furnace has been connected. After all connections have been made, purge lines and check for leakage at furnace prior to operating furnace.

If pressure exceeds 0.5 psig (14-in. wc), gas supply pipe must be disconnected from furnace and capped before pressure test. If test pressure is equal to or less than 0.5 psig (14-in. wc), turn off electric shutoff switch located on furnace gas control valve and accessible manual shutoff valve before test. After all connections have been made, purge lines and check for leakage.

The gas supply pressure shall be within the maximum and minimum inlet supply pressures marked on the rating plate with the furnace burners ON and OFF.

### Step 8—Electrical Connections

See Fig. 27 for field wiring diagram showing typical field 115-v and 24-v wiring. Check all factory and field electrical connections for tightness.

Field-supplied wiring shall conform with the limitations of 63°F (33°C) rise.

**⚠ WARNING**

**ELECTRICAL SHOCK HAZARD**
Failure to follow this warning could result in serious injury or death.
Blower access door switch opens 115-v power to control. No component operation can occur. Do not bypass or close switch with panel removed.

**⚠ CAUTION**

→ **FURNACE MAY NOT OPERATE/PROPERTY DAMAGE**
Failure to follow this caution may result in furnace operation stopping and water pipes freezing during cold weather.
Furnace control must be grounded for proper operation or control will lock out. Control is grounded through green/yellow wire connected to gas valve and burner box screw.

115–V WIRING

Before proceeding with electrical connections, make certain that voltage, frequency, and phase correspond to that specified on furnace rating plate. Also, check to be sure that service provided

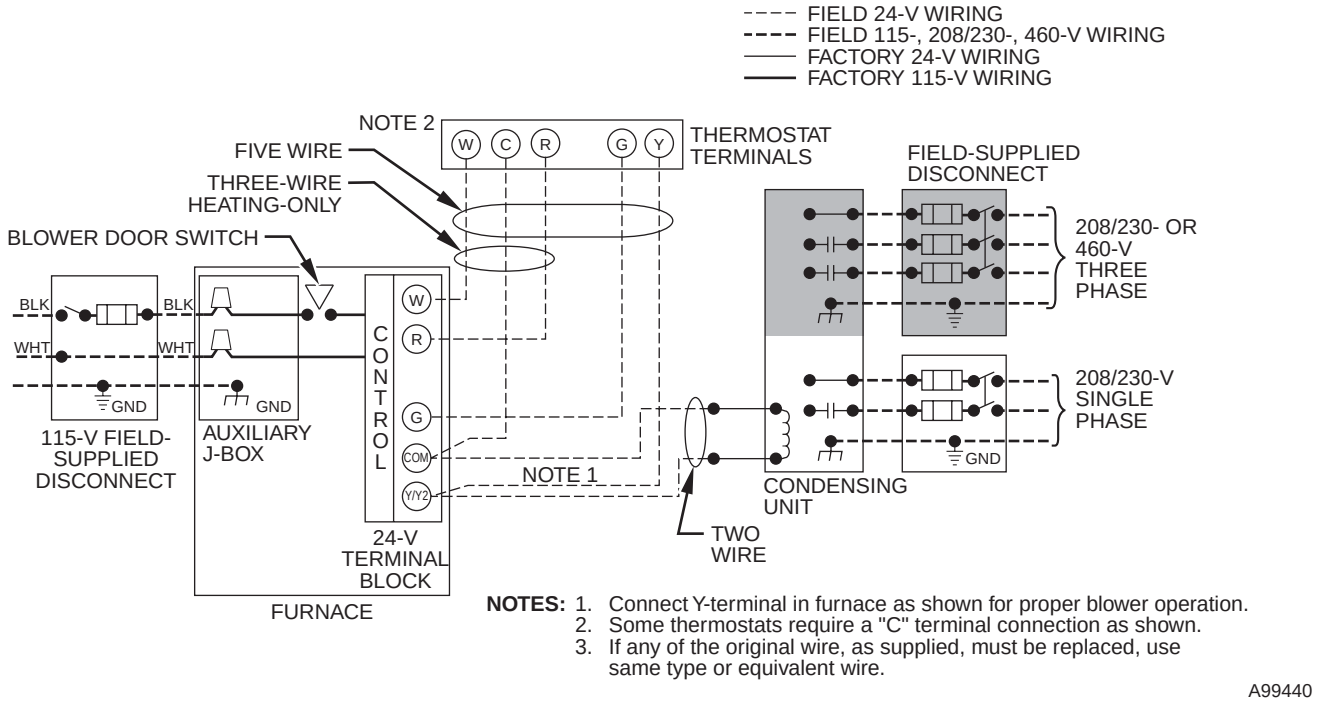


**Fig. 27—Typical Heating and Cooling Application Wiring Diagram**

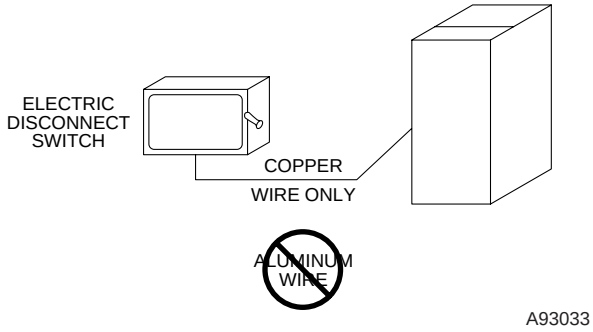


**Fig. 28—Disconnect Switch and Furnace**

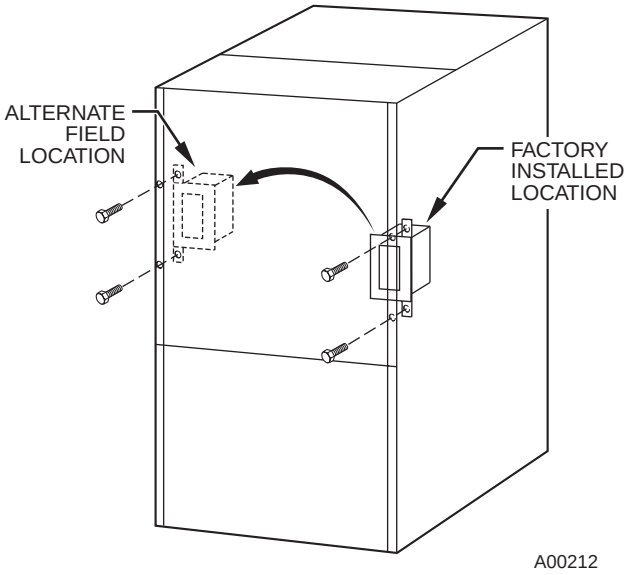


**Fig. 29—Relocating J-Box**

by power supply is sufficient to handle load imposed by this equipment. Refer to rating plate or Table 4 for equipment electrical specifications. Make all electrical connections in accordance with National Electrical Code (NEC) ANSI/NFPA 70-2002 and any local codes or ordinances that might apply. For Canadian installations, all electrical connections must be made in accordance with Canadian Electrical Code CSA C22.1 or authorities having jurisdiction. Use a separate, branch electrical circuit containing a properly sized fuse or circuit breaker for this furnace. See Table 4 for wire size and fuse specifications. A disconnecting means must be located within sight from and readily accessible to furnace.

**NOTE:** Proper polarity must be maintained for 115-v wiring. If polarity is incorrect, control LED status indicator will flash rapidly and furnace will NOT operate.

**⚠ WARNING**

**FIRE HAZARD**

Failure to follow this warning could result in serious injury, death, or property damage.

Do not connect aluminum wire between disconnect switch and furnace. Use only copper wire. (See Fig. 28.)

**⚠ WARNING**

**ELECTRICAL SHOCK AND FIRE HAZARD**

Failure to follow this warning could result in serious injury, death, or property damage.

The cabinet MUST have an uninterrupted or unbroken ground according to NEC ANSI/NFPA 70-2002 and Canadian Electrical Code CSA C22.1 or local codes to minimize personal injury if an electrical fault should occur. This may consist of electrical wire or conduit approved for electrical ground when installed in accordance with existing electrical codes. Do not use gas piping as an electrical ground.

J-Box Relocation

1. Remove 2 screws holding auxiliary J-box. (See Fig. 29.)
2. Rotate J-box 180° and attach box to left side, using holes provided.

**⚠ WARNING**

→ **ELECTRICAL SHOCK AND FIRE HAZARD**
Failure to follow this warning could result in serious injury, death, or property damage.
If manual disconnect switch is to be mounted on furnace, select a location where a drill or fastener will not contact electrical or gas components.

24–V WIRING

Connect 24-v thermostat leads to 24-v terminal block on furnace control. For proper cooling operation, Y wire from thermostat MUST be connected to Y/Y2 terminal on furnace control, as shown in Fig. 27. The 24-v terminal block is marked for easy connection of field wiring. (See Fig. 30.) The 24-v circuit contains a 3-amp, automotive-type fuse located on furnace control. (See Fig. 31.) Any electrical shorts of 24-v wiring during installation, service, or maintenance may cause fuse to blow. If fuse replacement is required, use only a fuse of identical size (3 amp) and type. The control will flash code 24 when fuse needs replacement.

**NOTE:** Use AWG No. 18 color-coded copper thermostat wire for lengths up to 100 ft. For wire lengths over 100 ft, use AWG No. 16 wire.

ACCESSORIES

1. Electronic Air Cleaner (EAC)
   Two quick-connect terminals marked EAC-1 and EAC-2 are provided for EAC connection. (See Fig. 31.) These terminals are energized with 115-v (1.0-amp maximum) during blower motor operation.

**⚠ CAUTION**

**UNIT MAY NOT OPERATE**
Failure to follow this caution may result in intermittent operation or performance satisfaction.
DO NOT connect furnace control HUM terminal to HUM (humidifier) terminal on Thermidistat™, Zone Controller or similar device. See Thermidistat™, Zone Controller, thermostat, or controller manufacturer's instructions for proper connection.

2. Humidifier (HUM)
   A quick-connect terminal (HUM) and screw terminal (COM 24V) are provided for 24-v humidifier connection. (See Fig. 30.) HUM terminal is energized with 24-v (0.5-amp maximum) when gas valve is energized.

**NOTE:** A field-supplied, 115-v controlled relay connected to EAC terminals may be added if humidifier operation is desired during all blower operation.

### Step 9—Direct Venting

The 58MXA furnaces require a dedicated (one 58MXA furnace only) direct-vent system. In a direct-vent system, all air for combustion is taken directly from outdoor atmosphere, and all flue gases are discharged to outdoor atmosphere.

REMOVAL OF EXISTING FURNACES FROM COMMON VENT SYSTEMS

When an existing Category I furnace is removed or replaced, the original venting system may no longer be sized to properly vent the remaining attached appliances. An improperly sized Category I venting system could cause the formation of condensate in the furnace and vent, leakage of condensate and combustion products, and spillage of combustion products into the living space, etc.

**⚠ WARNING**

**CARBON MONOXIDE POISONING HAZARD**
Failure to follow the steps outlined below for each appliance connected to the venting system being placed into operation could result in carbon monoxide poisoning or death.
The following steps shall be followed for each appliance connected to the venting system being placed into operation, while all other appliances connected to the venting system are not in operation:

1. Seal any unused openings in venting system.
2. Inspect the venting system for proper size and horizontal pitch, as required in the National Fuel Gas Code, ANSI Z223.1-2002/NFPA 54-2002 or the CSA B149.1, Natural Gas and Propane Installation Code and these instructions. Determine that there is no blockage or restriction, leakage, corrosion and other deficiencies, which could cause an unsafe condition.
3. As far as practical, close all building doors and windows and all doors between the space in which the appliance(s) connected to the venting system are located and other spaces of the building.
4. Close fireplace dampers.
5. Turn on clothes dryers and any appliance not connected to the venting system. Turn on any exhaust fans, such as range hoods and bathroom exhausts, so they are operating at maximum speed. Do not operate a summer exhaust fan.
6. Follow the lighting instructions. Place the appliance being inspected into operation. Adjust the thermostat so appliance is operating continuously.
7. Test for spillage from draft hood equipped appliances at the draft hood relief opening after 5 minutes of main burner operation. Use the flame of a match or candle.
8. If improper venting is observed during any of the above tests, the venting system must be corrected in accordance with the National Fuel Gas Code, ANSI Z223.1-2002/NFPA 54-2002 and/or CSA B149.1, Natural Gas and Propane Installation Codes.
9. After it has been determined that each appliance connected to the venting system properly vents when tested as outlined above, return doors, windows, exhaust fans, fireplace dampers and any other gas-fired burning appliance to their previous conditions of use.

Vent system or vent connectors may need to be resized. For any other appliances when resizing vent systems or vent connectors, system or connector must be sized to approach minimum size as determined using appropriate table found in the NFGC or NSCNGPIC.

COMBUSTION-AIR AND VENT PIPING

General

Combustion-air and vent pipe, fittings, primers, and solvents must conform to American National Standards Institute (ANSI) standards and American Society for Testing and Materials (ASTM) standards. See Table 6 for approved materials for use in the U.S.A. In Canada construct all combustion-air and vent pipes for this furnace of CSA or ULC listed schedule-40 PVC, PVC-DWV or ABS-DWV pipe and pipe cement. SDR pipe is NOT approved in Canada.

See Table 7 for maximum pipe lengths and Fig. 36, 37, 38, 39, and 40 for exterior piping arrangements.

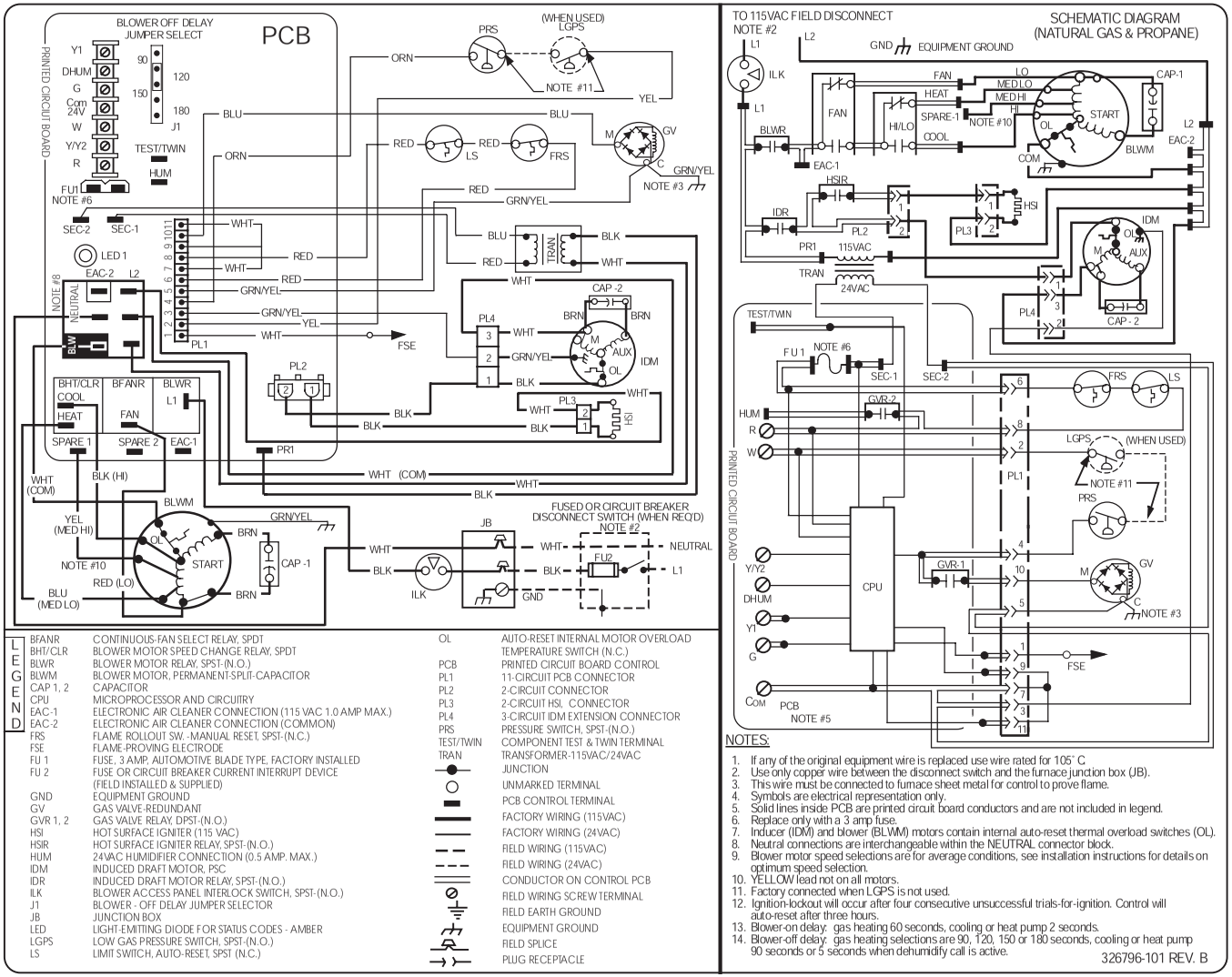


| LEGEND | | | |
|---|---|---|---|
| BFANR | CONTINUOUS-FAN SELECT RELAY, SPDT | OL | AUTO-RESET INTERNAL MOTOR OVERLOAD TEMPERATURE SWITCH (N.C.) |
| BHT/CLR | BLOWER MOTOR SPEED CHANGE RELAY, SPDT | PCB | PRINTED CIRCUIT BOARD CONTROL |
| BLWR | BLOWER MOTOR RELAY, SPST-(N.O.) | PL1 | 11-CIRCUIT PCB CONNECTOR |
| BLWM | BLOWER MOTOR, PERMANENT-SPLIT-CAPACITOR | PL2 | 2-CIRCUIT CONNECTOR |
| CAP 1, 2 | CAPACITOR | PL3 | 2-CIRCUIT HSI, CONNECTOR |
| CPU | MICROPROCESSOR AND CIRCUITRY | PL4 | 3-CIRCUIT IDM EXTENSION CONNECTOR |
| EAC-1 | ELECTRONIC AIR CLEANER CONNECTION (115 VAC 1.0 AMP MAX.) | PRS | PRESSURE SWITCH, SPST-(N.O.) |
| EAC-2 | ELECTRONIC AIR CLEANER CONNECTION (COMMON) | TEST/TWIN | COMPONENT TEST & TWIN TERMINAL |
| FRS | FLAME ROLLOUT SW. -MANUAL RESET, SPST-(N.C.) | TRAN | TRANSFORMER-115VAC/24VAC |
| FSE | FLAME-PROVING ELECTRODE | | JUNCTION |
| FU 1 | FUSE, 3 AMP, AUTOMOTIVE BLADE TYPE, FACTORY INSTALLED | | UNMARKED TERMINAL |
| FU 2 | FUSE OR CIRCUIT BREAKER CURRENT INTERRUPT DEVICE (FIELD INSTALLED & SUPPLIED) | | PCB CONTROL TERMINAL |
| GND | EQUIPMENT GROUND | | FACTORY WIRING (115VAC) |
| GV | GAS VALVE-REDUNDANT | | FACTORY WIRING (24VAC) |
| GVR 1, 2 | GAS VALVE RELAY, DPST-(N.O.) | | FIELD WIRING (115VAC) |
| HSI | HOT SURFACE IGNITER (115 VAC) | | FIELD WIRING (24VAC) |
| HSIR | HOT SURFACE IGNITER RELAY, SPST-(N.O.) | | CONDUCTOR ON CONTROL PCB |
| HUM | 24VAC HUMIDIFIER CONNECTION (0.5 AMP. MAX.) | | FIELD WIRING SCREW TERMINAL |
| IDM | INDUCED DRAFT MOTOR, PSC | | FIELD EARTH GROUND |
| IDR | INDUCED DRAFT MOTOR RELAY, SPST-(N.O.) | | EQUIPMENT GROUND |
| ILK | BLOWER ACCESS PANEL INTERLOCK SWITCH, SPST-(N.O.) | | FIELD SPLICE |
| J1 | BLOWER - OFF DELAY JUMPER SELECTOR | | PLUG RECEPTACLE |
| JB | JUNCTION BOX | | |
| LED | LIGHT-EMITTING DIODE FOR STATUS CODES - AMBER | | |
| LGPS | LOW GAS PRESSURE SWITCH, SPST-(N.O.) | | |
| LS | LIMIT SWITCH, AUTO-RESET, SPST (N.C.) | | |

NOTES:

1. If any of the original equipment wire is replaced use wire rated for 105° C
2. Use only copper wire between the disconnect switch and the furnace junction box (JB).
3. This wire must be connected to furnace sheet metal for control to prove flame.
4. Symbols are electrical representation only.
5. Solid lines inside PCB are printed circuit board conductors and are not included in legend.
6. Replace only with a 3 amp fuse.
7. Inducer (IDM) and blower (BLWM) motors contain internal auto-reset thermal overload switches (OL).
8. Neutral connections are interchangeable within the NEUTRAL connector block.
9. Blower motor speed selections are for average conditions, see installation instructions for details on optimum speed selection.
10. YELLOW lead not on all motors.
11. Factory connected when LGPS is not used.
12. Ignition-lockout will occur after four consecutive unsuccessful trials-for-ignition. Control will auto-reset after three hours.
13. Blower-on delay: gas heating 60 seconds, cooling or heat pump 2 seconds.
14. Blower-off delay: gas heating selections are 90, 120, 150 or 180 seconds, cooling or heat pump 90 seconds or 5 seconds when dehumidify call is active.

326796-101 REV. B

**Fig. 30—Wiring Diagram**

A03229

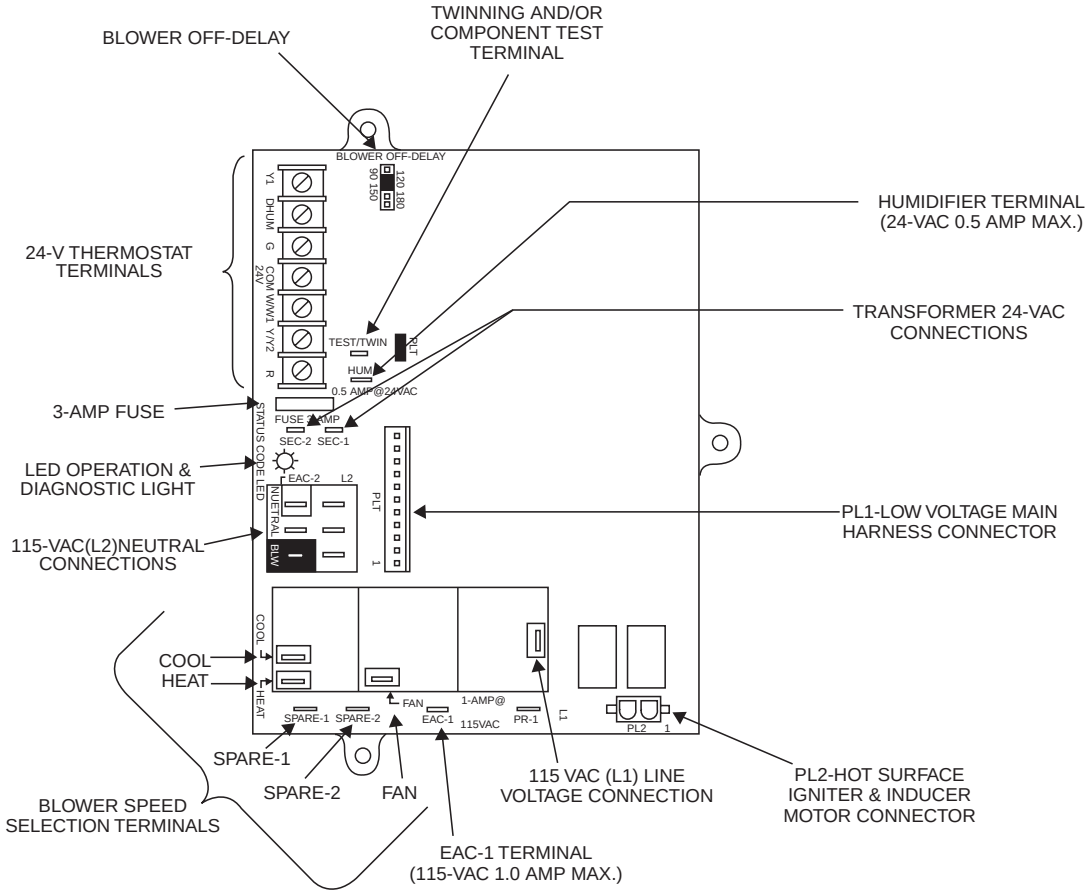


A02142

**Fig. 31—Furnace Control**

**Table 4—Electrical Data**

| FURNACE SIZE | VOLTS—HERTZ—PHASE | OPERATING VOLTAGE RANGE | | MAX UNIT AMPS | UNIT AMPACITY† | MIN WIRE SIZE | MAX WIRE LENGTH (FT)‡ | MAX FUSE OR CKT BKR AMPS** |
|---|---|---|---|---|---|---|---|---|
| | | Max* | Min* | | | | | |
| **040-08** | 115-60-1 | 127 | 104 | 6.1 | 8.4 | 14 | 44 | 15 |
| **040-12** | 115-60-1 | 127 | 104 | 7.3 | 10.0 | 14 | 37 | 15 |
| **060-08** | 115-60-1 | 127 | 104 | 6.1 | 8.4 | 14 | 44 | 15 |
| **060-12** | 115-60-1 | 127 | 104 | 7.1 | 9.8 | 14 | 38 | 15 |
| **060-16** | 115-60-1 | 127 | 104 | 9.5 | 12.8 | 14 | 29 | 15 |
| **080-12** | 115-60-1 | 127 | 104 | 7.6 | 10.4 | 14 | 36 | 15 |
| **080-16** | 115-60-1 | 127 | 104 | 10.0 | 13.4 | 14 | 28 | 15 |
| **080-20** | 115-60-1 | 127 | 104 | 14.1 | 18.4 | 12 | 31 | 20 |
| **100-16** | 115-60-1 | 127 | 104 | 10.2 | 13.5 | 14 | 27 | 15 |
| **100-20** | 115-60-1 | 127 | 104 | 14.8 | 19.3 | 12 | 30 | 20 |
| **120-20** | 115-60-1 | 127 | 104 | 14.6 | 19.1 | 12 | 30 | 20 |
| **140-20** | 115-60-1 | 127 | 104 | 14.3 | 18.8 | 12 | 30 | 20 |

* Permissible limits of voltage range at which unit will operate satisfactorily.
† Unit ampacity = 125 percent of largest operating component's full load amps plus 100 percent of all other potential operating components' (EAC, humidifier, etc.) full load amps.
‡ Length shown is a measured 1 way along wire path between unit and service panel for maximum 2 percent voltage drop.
** Time-delay type is recommended.

**NOTE:** Furnace combustion-air and vent pipe connections are sized for 2-in. pipe. Any pipe size change should be made outside furnace casing in vertical pipe. (See Fig. 32.) This allows proper drainage of vent condensate.

Combustion-air and vent pipes must terminate together in same atmospheric pressure zone, either through roof or sidewall (roof termination preferred), using accessory termination kit.

See Table 5 for required clearances.

Furnace combustion-air and vent pipe connections must be attached as shown in Fig. 33. Combustion-air intake plug fitting and inducer housing alternate vent cap may need to be relocated in some applications.

**NOTE:** Slope combustion-air and vent pipes downward toward furnace a minimum of 1/4 in. per linear ft with no sags between hangers.

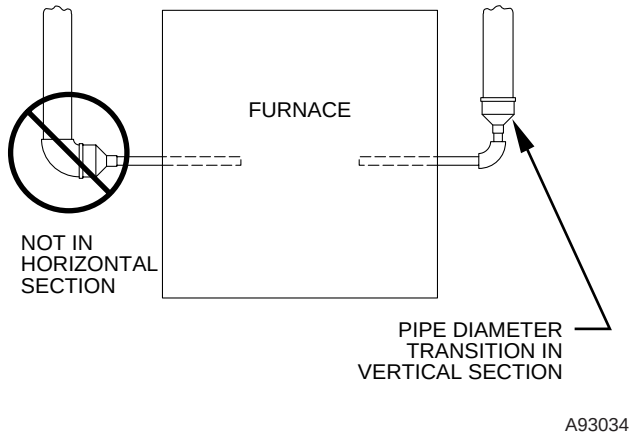


**Fig. 32—Combustion-Air and Vent Pipe Diameter Transition Location and Elbow Configuration**

**⚠ CAUTION**

→ **PROPERTY DAMAGE**
Failure to follow this caution may result in dripping condensate and potential property damage.
When combustion-air pipe is installed above a suspended ceiling, pipe must be insulated with 3/8-in. thick Armaflex-type insulation. Combustion-air pipe should also be insulated when it passes through warm, humid space.

An abandoned masonry chimney may be used as a raceway for properly insulated and supported combustion-air and vent pipes. Each furnace must have its own set of combustion-air and vent pipes and be terminated individually, as shown in Fig. 42.

Other gas appliances with their own venting system may also use the abandoned chimney as a raceway providing it is permitted by local code, the NFGC or NSCNGPIC, and the vent or liner manufacturer's installation instructions. Care must be taken to prevent the exhaust gases from one appliance from contaminating the combustion air of other gas appliances.

**⚠ CAUTION**

**UNIT MAY NOT OPERATE**
Failure to follow this caution may result in intermittent unit operation.
When vent pipe is exposed to temperatures below freezing, such as when it passes through an unheated space or when a chimney is used as a raceway, pipe must be insulated as shown in Table 8 with Armaflex-type insulation.

**⚠ CAUTION**

**UNIT CORROSION HAZARD**
Excessive exposure to contaminated combustion air may result in safety and performance related problems.
Combustion air must not be taken from inside structure because inside air is frequently contaminated by halogens, which include fluorides, chlorides, bromides, and iodides. These elements are found in aerosols, detergents, bleaches, cleaning solvents, salts, air fresheners, adhesives, paint, and other household products. Locate combustion-air inlet as far as possible from swimming pool and swimming pool pump house.

**⚠ WARNING**

**FIRE AND EXPLOSION HAZARD**
Failure to follow this warning could result in fire, property damage, personal injury, or death.
Solvent cements are combustible. Keep away from heat, sparks, and open flame. Use only in well-ventilated areas. Avoid breathing in vapor or allowing contact with skin or eyes.

**⚠ WARNING**

**CARBON MONOXIDE/PROPERTY DAMAGE**
Failure to follow this warning could result in property damage, personal injury, or death.
All combustion-air and vent pipes must be airtight and watertight. Pipes must also terminate exactly as shown in Fig. 36, 37, 38, 39, or 40.

**NOTE:** The minimum combustion-air and vent pipe length (each) for these furnaces is 5 ft. Short pipe lengths (5-8 ft) may discharge water droplets. These droplets may be undesirable, and a 12-in. minimum offset pipe section is recommended, as shown in Fig. 34, to reduce excessive droplets from exiting vent pipe outlet.

Combustion-Air and Vent Pipe Diameter

Determine combustion-air and vent pipe diameter.

1. Using Table 7, individually determine the smallest combustion-air and vent pipe diameters permitted for each pipe. Pick the larger of these 2 pipe diameters and use this diameter for both combustion-air and vent pipes.
2. When installing vent systems of short pipe length, use the smallest allowable pipe diameter. Do not use pipe size greater than required becuase incomplete combustion, flame disturbance, or flame sense lockout may occur.

**NOTE:** Do not count elbows or pipe sections in terminations or within furnace. See shaded areas in Fig. 36, 37, 38, 39, and 40.

EXAMPLE: An 080-12 size furnace located in Indianapolis, elevation 650 ft above sea level, could be installed in an application requiring 3 elbows and 32 ft of vent pipe, along with 5 elbows and 34 ft of combustion-air pipe. Table 7 indicates this application would allow a 2-in. diameter vent pipe, but require a 2-1/2 in. diameter combustion air pipe (2-in. pipe is good for 35 ft with 3 elbows, but only 30 ft with 5 elbows). Therefore, 2-1/2 in. diameter pipe must be used for both vent and combustion-air pipes since larger required diameter must always be used for both pipes. If same installation were in Albuquerque, elevation 5250 ft above sea level, installation would require 2-1/2 in. vent pipe and combustion-air pipe. At 5001- to 6000-ft elevation, 2-in. pipe is only good for 17 ft with 5 elbows, and 2-1/2 in. pipe is good for 70 ft with 5 elbows.

Combustion-Air and Vent Pipe Attachment

**NOTE:** All pipe joints must be cemented except attachment of combustion-air pipe to inlet housing connection, since it may be necessary to remove pipe for servicing.

1. Attach combustion-air pipe as follows:
   a. Determine location of combustion-air intake pipe connection to combustion-air intake housing as shown in Fig. 33 for application.
   b. Reposition combustion-air intake housing plug fitting in appropriate unused intake housing connection.

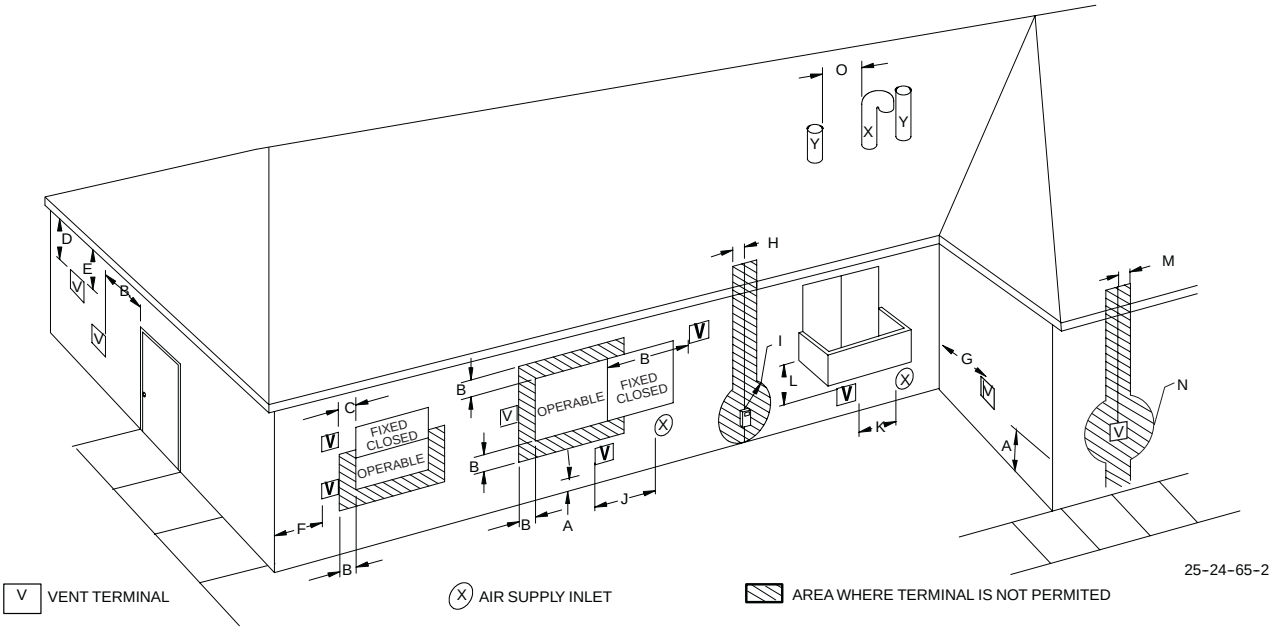


| Item | Clearance Description | Canadian Installation (1) | U.S. Installation (2) |
|---|---|---|---|
| A | Clearance above grade, veranda, porch, deck, balcony, or anticipated snow level | 12″ (30cm) # | 12″ (30 cm) |
| B | Clearance to a window or door that may be opened | 12″ (30 cm) for appliances > 10,000 Btuh (3 kW) and ≤ 100,000 Btuh (30 kW), 36″ (91 cm) for appliances > 100,000 Btuh (30 kW) | 9″(23 cm) for appliances > 10,000 Btuh (3 kW) and ≤ 50,000 Btuh (15kW), 12″ (30 cm) for appliances > 50,000 Btuh (15 kW) |
| C | Clearance to a permanently closed window | * | * |
| D | Vertical clearance to a ventilated soffit located above the terminal within a horizontal distance of 2´(61cm) from the centerline of the terminal | * | * |
| E | Clearance to an unventilated soffit | * | * |
| F | Clearance to an outside corner | * | * |
| G | Clearance to an inside corner | * | * |
| H | Clearance to each side of the centerline extended above electrical meter or gas service regulator assembly | 3´ (91 cm) within 15´(4.5 m) above the meter/regulator assembly | 3´ (91 cm) within 15´(4.5 m) above the meter/regulator assembly |
| I | Clearance to service regulator vent outlet | 3´ (91 cm) | * |
| J | Clearance to non-mechanical air supply inlet to building or the combustion air inlet to any other appliance | 9″ (23 cm) for appliances > 10,000 Btuh (3 kW) and ≤ 100,000 Btuh (30kW) and ≤ 50,000 Btuh (15 kW), 12″ (30 cm) for appliances > 50,000 Btuh (15 kW) | 9″(23 cm) for appliances > 10,000 Btuh (3 kW) and ≤ 50,000 Btuh (15kW), 12″ (30 cm) for appliances > 50,000 Btuh (15 kW) |
| K | Clearance to a mechanical air supply inlet | 6´ (1.83 m) | 3´ (91 cm) above if within 10´(3m)horizontally |
| L | Clearance under a veranda, porch, deck, or balcony | 12″ (30 cm) + | * |
| M | Clearance to each side of the centerline extended above or below vent terminal of the furnace to a dryer or water heater vent, or other appliance's direct vent intake or exhaust. | 12″ (30 cm) | 12″ (30 cm) |
| N | Clearance to the vent terminal of a dryer vent, water heater vent, or other appliances direct vent intake or exhaust. | 3´ (91 cm) | 3´ (91 cm) |
| O | Clearance from a plumbing vent stack | 3´ (91 cm) | 3´ (91 cm) |

(1.) In accordance with the current CSA B149.1, Natural Gas and Propane Installation Code

(2.) In accordance with the current ANSI Z223.1/NFPA 54, National Fuel Gas Code

# 18″ (46 cm) above roof surface

+ Permitted only if veranda, porch, deck, or balcony is fully open on a minimum of two sides beneath the floor.

* For clearances not specified in ANSI Z223.1/NFPA 54 or CSA B149.1, clearances shall be in accordance with local installation codes and the requirements of the gas supplier and the manufacturer's installation instructions

Notes:

1. The vent for this appliance shall not terminate
   a. Over public walkways; or
   b. Near soffit vents or crawl space vents or other areas where condensate or vapor could create a nusaince or hazard or property damage; or
   c. Where condensate vapor could cause damage or could be detrimental to the operation of regulators, relief valves, or other equipment.
2. When locating vent terminations, consideration must be given to prevailing winds, location, and other conditions which may cause recirculation of the combustion products of adjacent vents. Recirculation can cause poor combustion, inlet condensate problems, and accelerated corrosion of the heat exchangers.
3. Avoid venting under a deck or large overhang. Recirculation could occur and cause performance or system problems.

A04117

## → Table 5—Direct Vent Termination Clearance

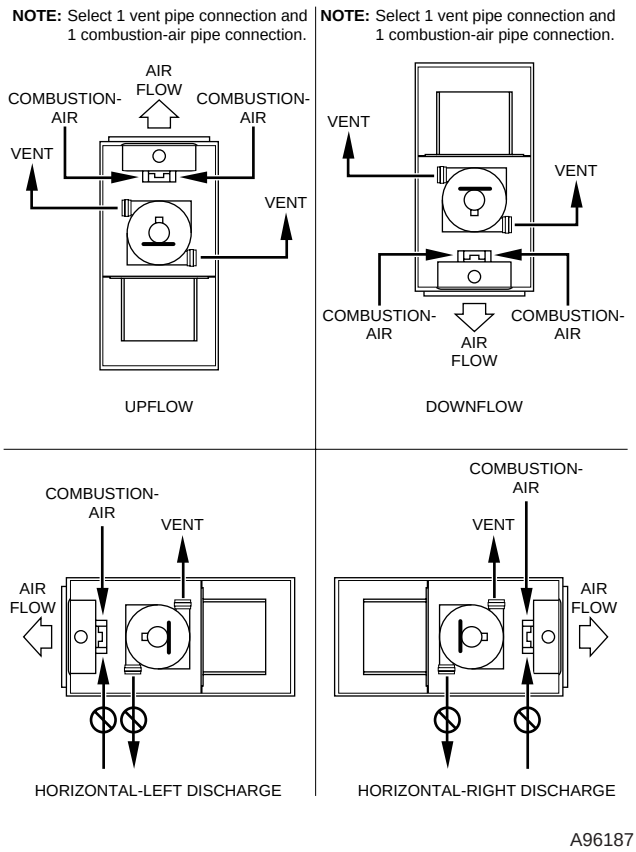


**Fig. 33—Combustion-Air and Vent Pipe Connections**

c. If required per Table 7, insert perforated disk assembly (factory-supplied in loose parts bag) in intake housing where combustion-air intake pipe will be connected. If half disk set is required, install with shoulder of disk against stop in combustion-air inlet.

d. Install pipe support (factory-supplied in loose parts bag) into selected furnace casing combustion-air pipe hole. Pipe support should be positioned at bottom of casing hole.

e. Insert 2-in. diameter pipe into intake housing.

**NOTE:** A 2-in. diameter pipe must be used within the furnace casing. Make all pipe diameter transitions outside furnace casing.

f. Install casing hole filler plug (factory-supplied in loose parts bag) in unused combustion-air pipe casing hole.

g. Drill a 1/8-in. hole in 2-in. combustion-air pipe using hole in intake housing as a guide.

h. Install a field-supplied No. 6 or No. 8 sheet metal screw into combustion-air pipe.

**NOTE:** DO NOT OVERTIGHTEN SCREW. Breakage of intake housing or fitting may cause air leakage to occur.

**NOTE:** Do not attach combustion-air intake pipe permanently to combustion-air intake housing since it may be necessary to remove pipe for service of ignitor or flame sensor.

COMBUSTION-AIR INTAKE HOUSING PLUG FITTING

The combustion-air intake plug fitting must be installed in unused combustion-air intake housing. This fitting must be attached by using RTV sealant, or by drilling a 1/8-in. hole in fitting, using hole in intake housing as a guide. Install a field-supplied No. 6 or No. 8 sheet metal screw.

**NOTE:** DO NOT OVERTIGHTEN SCREW. Breakage of intake housing or fitting may cause air leakage to occur.

A plugged drain connection has been provided on this fitting for use when moisture is found in combustion-air intake pipe and combustion box.

**NOTE:** Moisture in combustion-air intake may be result of improper termination. Ensure combustion-air intake pipe termination is similar to that shown in Fig. 36, 37, 38, 39, and 40 so it will not be susceptible to areas where light snow or other sources of moisture could be pulled in.

If use of this drain connection is desired, drill out fitting's tap plug with a 3/16-in. drill and connect a field-supplied 3/8-in. tube. This tube should be routed to open condensate drain for furnace and A/C (if used), and should be trapped. (See Fig. 35.)

2. Attach vent pipe to furnace as follows:

   a. Determine location of vent pipe connection to inducer housing as shown in Fig. 33 for application.

   b. Reposition elastomeric (rubber) inducer housing outlet cap and clamp to appropriate unused inducer housing connection. Tighten clamp.

**⚠ CAUTION**

→ **UNIT DAMAGE HAZARD**
Failure to follow this caution may result in unit component damage.
**Inducer housing outlet cap** must be installed and fully seated against inducer housing. Clamp must be tightened to prevent any condensate leakage.

   c. Install pipe support (factory-supplied in loose parts bag) into selected furnace casing vent pipe hole. Pipe support should be positioned at bottom of casing hole.

**⚠ CAUTION**

→ **UNIT DAMAGE HAZARD**
Failure to follow this caution may result in unit component damage.
**Vent pipe** must be installed and fully seated against inducer housing internal stop. Clamp must be tightened to prevent any condensate leakage.

**NOTE:** A 2-in. diameter pipe must be used within the furnace casing. Make all pipe diameter transitions outside furnace casing.

   d. Be certain that mating surfaces of inducer housing connection, elastomeric coupling, and 2-in. diameter vent pipe are clean and dry. Assemble the elastomeric (rubber) vent coupling (with 2 loose clamps) onto inducer housing connection. Insert the 2-in. diameter vent pipe through the elastomeric (rubber) coupling and fully into inducer housing connection until it bottoms on the internal stop. Tighten both clamps to secure the pipe to inducer housing. Tighten the clamp screws to 15 in.-lb. of torque.

   e. Install casing hole filler plug (factory-supplied in loose parts bag) in unused combustion-air pipe casing hole.

VENT EXTENSION PIPE

Furnaces with 100,000 Btuh and larger inputs are supplied with a PVC vent extension pipe (2-in. diameter by 12-in. long). This pipe has a built-in channel to assist vent condensate disposal. When this vent extension pipe is supplied, it must be used to connect the field vent pipe to furnace inducer housing on ALL upflow and downflow applications.

**NOTE:** See label on vent extension pipe for proper installation. This pipe may be shortened if an elbow is used to connect vent extension tube to field-installed vent pipe.

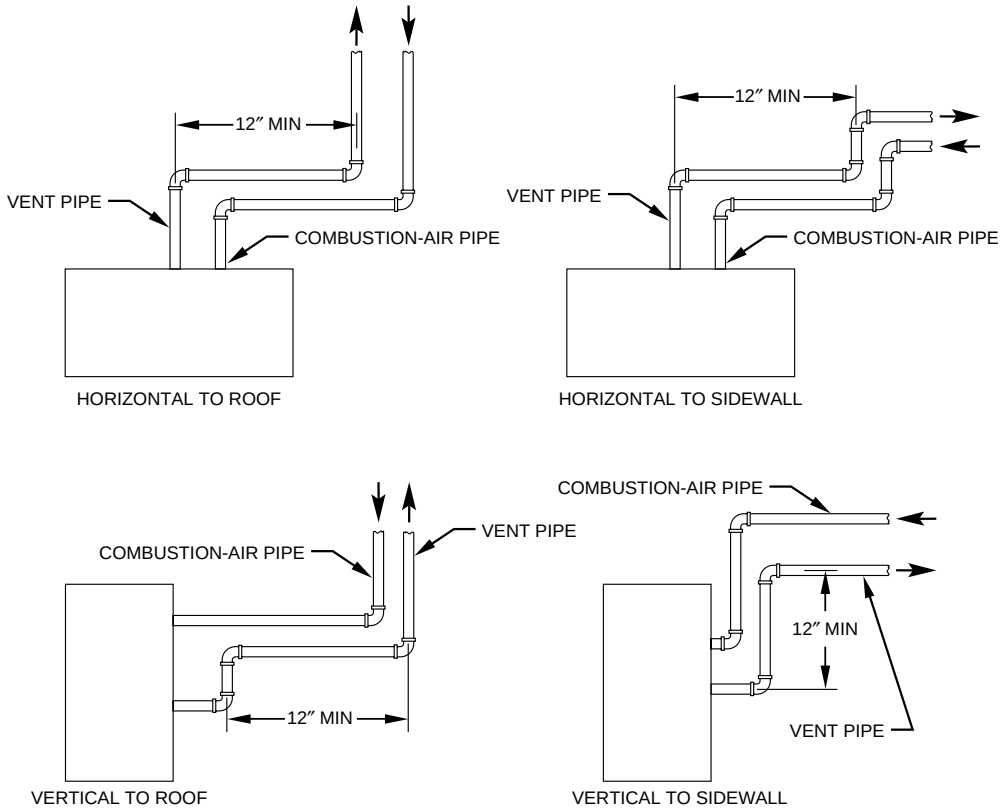


**NOTE**: A 12 In. minimum offset pipe section is recommended with short (5 to 8 ft) vent systems. This recommendation is to reduce excessive condensate droplets from exiting the vent pipe.

A96230

**Fig. 34—Short Vent (5 to 8 Ft) System**

**Table 6—Approved Combustion-Air and Vent Pipe, Fitting and Cement Materials**

| ASTM SPECIFICATION (MARKED ON MATERIAL) | MATERIAL | PIPE | FITTINGS | SOLVENT CEMENT AND PRIMERS | DESCRIPTION |
|---|---|---|---|---|---|
| **D1527** | ABS | Pipe | — | — | Schedule-40 |
| **D1785** | PVC | Pipe | — | — | Schedule-40 |
| **D2235** | For ABS | — | — | Solvent Cement | For ABS |
| **D2241** | PVC | Pipe | — | — | SDR-21 & SDR-26 |
| **D2466** | PVC | — | Fittings | — | Schedule-40 |
| **D2468** | ABS | — | Fittings | — | Schedule-40 |
| **D2564** | For PVC | — | — | Solvent Cement | For PVC |
| **D2661** | ABS | Pipe | Fittings | — | DWV at Schedule-40 IPS sizes |
| **D2665** | PVC | Pipe | Fittings | — | DWV |
| **F438** | CPVC | — | Fittings | — | Schedule-40 |
| **F441** | CPVC | Pipe | — | — | Schedule-40 |
| **F442** | CPVC | Pipe | — | — | SDR |
| **F493** | For CPVC | — | — | Solvent Cement | For CPVC |
| **F628** | ABS | Pipe | — | — | Cellular Core DWV at Schedule-40 IPS sizes |
| **F656** | For PVC | — | — | Primer | For PVC |
| **F891** | PVC | Pipe | — | — | Cellular Core Schedule-40 & DWV |

3. Working from furnace to outside, cut pipe to required length(s).
4. Deburr inside and outside of pipe.
5. Chamfer outside edge of pipe for better distribution of primer and cement.
6. Clean and dry all surfaces to be joined.
7. Check dry fit of pipe and mark insertion depth on pipe.

**NOTE:** It is recommended that all pipes be cut, prepared, and preassembled before permanently cementing any joint.

8. After pipes have been cut and preassembled, apply generous layer of cement primer to pipe fitting socket and end of pipe to insertion mark. Quickly apply approved cement to end of pipe and fitting socket (over primer). Apply cement in a light,

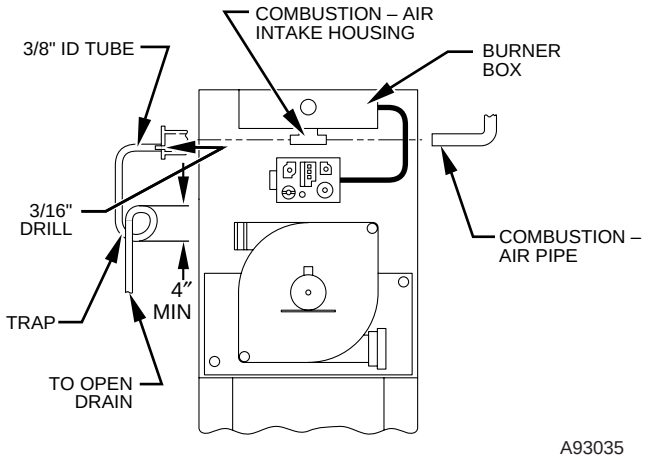


**Fig. 35—Air Intake Housing Plug Fitting Drain**

uniform coat on inside of socket to prevent buildup of excess cement. Apply second coat.

9. While cement is still wet, twist pipe into socket with 1 /4 turn. Be sure pipe is fully inserted into fitting socket.
10. Wipe excess cement from joint. A continuous bead of cement will be visible around perimeter of a properly made joint.
11. Handle pipe joints carefully until cement sets.
12. Support combustion-air and vent piping a minimum of every 5 ft (3 ft for SDR-21 or -26 PVC) using perforated metal hanging strap.
13. Slope combustion-air and vent pipes downward toward furnace a minimum of 1/4 in. per linear ft with no sags between hangers.
14. Use appropriate methods to seal openings where vent and combustion-air pipes pass through roof or side wall.

CONCENTRIC VENT AND COMBUSTION-AIR TERMINATION KIT INSTALLATION

**NOTE:** If these instructions differ from those packaged with termination kit, follow kit instructions.

Combustion-air and vent pipes must terminate outside structure. A factory accessory termination kit must be installed in 1 of the installations shown in Fig. 36, 37, 38, 39, and 40. Four termination kits are available:

→ See Table 5 for additional termination information.

1. The 2-in. termination bracket kit is for 1-in., 1-1/2 in., and 2-in. diameter 2-pipe termination systems.
2. The 3-in. termination bracket kit is for 2-1/2 in., 3-in., and 4-in. diameter 2-pipe termination systems.
3. The 2-in. concentric vent/air termination kit is for 1-in., 1-1/2 in., 2-in., and 2-1/2 in. diameter pipe systems when single penetration of wall or roof is desired.
4. The 3-in. concentric vent/air termination kit is for 2-1/2 in., 3-in., and 4-in. diameter pipe systems when single penetration of wall or roof is desired.

**NOTE:** Shaded parts in Fig. 36, 37, 38, 39, and 40 are considered to be termination. These components should NOT be counted when determining pipe diameter. Roof termination is preferred since it is less susceptible to damage, has reduced chances to take in contaminants, and has less visible vent vapors. (See Fig. 36 or 37.) Sidewall termination may require sealing or shielding of building surfaces with a corrosive resistance material due to corrosive combustion products of vent system.

Extended Exposed Sidewall Pipes

Sidewall combustion-air and vent pipe terminations may be extended beyond area shown in Fig. 39 or 40 in outside ambient by insulating pipes as indicated in Table 8.

1. Determine combustion-air and vent pipe diameters, as stated above, using total pipe length and number of elbows.
2. Using winter design temperature (used in load calculations), find appropriate temperature for your application and furnace model.
3. Determine required insulation thickness for exposed pipe lengths.

**NOTE:** Pipe length (ft) specified for maximum pipe lengths located in unconditioned spaces. Pipes located in unconditioned space cannot exceed total allowable pipe length as specified in Table 7.

Two-Pipe Termination Kit

1. Determine location for termination.
   Consider the following when determining an appropriate location for termination kit.
   a. Comply with all clearance requirements as stated in Table 5.
   b. Termination kit should be positioned where vent vapors will not damage plants/shrubs or air conditioning equipment.
   c. Termination kit should be positioned so that it will not be affected by wind eddy (such as inside building corners) or allow recirculation of flue gases, airborne leaves, or light snow.
   d. Termination kit should be positioned where it will not be damaged by or subjected to foreign objects, such as stones, balls, etc.
   e. Termination kit should be positioned where vent vapors are not objectionable.
2. Cut 2 holes, 1 for each pipe, of appropriate size for pipe size being used.
3. Loosely install elbow in bracket and place assembly on combustion-air pipe.
   **Roof terminations**—Loosely install pipe coupling on properly cut vent pipe. Coupling must be positioned so bracket will mount as shown in Fig. 36.
   For applications using combustion-air pipe option, indicated by dashed lines in Fig. 36, install 90° street elbow into 90° elbow, making U-fitting. A 180° U-fitting may be used.
   **Sidewall terminations**—Install bracket as shown in Fig. 39 or 40.
   For applications using vent pipe option indicated by dashed lines in Fig. 39, rotate vent elbow 90° from position shown in Fig. 39.
4. Disassemble loose pipe fittings. Clean and cement using same procedures as used for system piping.
5. Check required dimensions as shown in Fig. 36, 39, or 40.

Concentric Vent/Air Termination Kit

1. Determine location for termination.
   Consideration of the following should be made when determining an appropriate location for termination kit.
   a. Comply with all clearance requirements as stated in Table 5.
   b. Termination kit should be positioned where vent vapors will not damage plants/shrubs or air conditioning equipment.

## Table 7—Maximum Allowable Pipe Length (ft)

| ALTITUDE (FT) | UNIT SIZE | TERMINATION TYPE | PIPE DIA (IN.)* | NUMBER OF 90° ELBOWS | | | | | |
|---|---|---|---|---|---|---|---|---|---|
| | | | | 1 | 2 | 3 | 4 | 5 | 6 |
| 0 to 2000 | 040-08<br>040-12 | 2 Pipe or 2-in Concentric | 1 | 5 | NA | NA | NA | NA | NA |
| | | | 1-1/2 | 70 | 70 | 65 | 60 | 60 | 55 |
| | | | 2 | 70 | 70 | 70 | 70 | 70 | 70 |
| | 060-08<br>060-12<br>060-16 | 2 Pipe or 2-in Concentric | 1-1/2 | 20 | 15 | 10 | 5 | NA | NA |
| | | | 2 | 70 | 70 | 70 | 70 | 70 | 70 |
| | 080-12<br>080-16<br>080-20 | 2 Pipe or 2-in Concentric | 1-1/2 | 10 | NA | NA | NA | NA | NA |
| | | | 2 | 55 | 50 | 35 | 30 | 30 | 20 |
| | | | 2-1/2 | 70 | 70 | 70 | 70 | 70 | 70 |
| | 100-16<br>100-20 | 2 Pipe or 3-in Concentric | 2 | 5 | NA | NA | NA | NA | NA |
| | | | 2-1/2 | 40 | 30 | 20 | 20 | 10 | NA |
| | | | 3 | 70 | 70 | 70 | 70 | 70 | 70 |
| | 120-20 | 2 Pipe or 3-in. Concentric | 2-1/2 one disk | 10 | NA | NA | NA | NA | NA |
| | | | 3† | 45 | 40 | 35 | 30 | 25 | 20 |
| | | | 3† no disk | 70 | 70 | 70 | 70 | 70 | 70 |
| | 140-20 | 2 Pipe or 3-in. Concentric | 2-1/2 one disk | 5 | NA | NA | NA | NA | NA |
| | | | 3† one disk | 40 | 35 | 30 | 25 | 20 | 15 |
| | | | 3† no disk | 60 | 56 | 52 | 48 | 44 | 40 |
| | | | 4† no disk | 70 | 70 | 70 | 70 | 70 | 70 |
| **ALTITUDE (FT)** | UNIT SIZE | TERMINATION TYPE | PIPE DIA (IN.)* | NUMBER OF 90° ELBOWS | | | | | |
| | | | | 1 | 2 | 3 | 4 | 5 | 6 |
| 2001 to 3000 | 040-08<br>040-12 | 2 Pipe or 2-in Concentric | 1-1/2 | 67 | 62 | 57 | 52 | 52 | 47 |
| | | | 2 | 70 | 70 | 70 | 70 | 70 | 70 |
| | | 2 Pipe or 2-in Concentric | 1–1/2 | 17 | 12 | 7 | NA | NA | NA |
| | 060-08<br>060-12<br>060-16 | | 2 | 70 | 67 | 66 | 61 | 61 | 61 |
| | 080-12<br>080-16<br>080-20 | 2 Pipe or 2-in Concentric | 2 | 49 | 44 | 30 | 25 | 25 | 15 |
| | | | 2-1/2 | 70 | 70 | 70 | 70 | 70 | 70 |
| | 100-16<br>100-20 | 2 Pipe or 3-in Concentric | 2–1/2 | 35 | 26 | 16 | 16 | 6 | NA |
| | | | 3 | 70 | 70 | 70 | 70 | 66 | 61 |
| | 120-20 | 2 Pipe or 3-in. Concentric | 3 | 14 | 9 | NA | NA | NA | NA |
| | | | 3† no disk | 70 | 70 | 63 | 56 | 50 | 43 |
| | | | 4† no disk | 70 | 70 | 70 | 70 | 70 | 70 |
| | 140-20 | 2 Pipe or 3-in. Concentric | 3† one disk | 20 | 15 | 10 | 5 | NA | NA |
| | | | 3† no disk | 39 | 35 | 31 | 27 | 23 | 19 |
| | | | 4† no disk | 70 | 70 | 70 | 70 | 70 | 70 |
| **ALTITUDE (FT)** | UNIT SIZE | TERMINATION TYPE | PIPE DIA (IN.)* | NUMBER OF 90° ELBOWS | | | | | |
| | | | | 1 | 2 | 3 | 4 | 5 | 6 |
| 3001 to 4000 | 040-08<br>040-12 | 2 Pipe or 2-in Concentric | 1-1/2 | 64 | 59 | 54 | 49 | 48 | 43 |
| | | | 2 | 70 | 70 | 70 | 70 | 70 | 70 |
| | 060-08<br>060-12<br>060-16 | 2 Pipe or 2-in Concentric | 1–1/2 | 16 | 11 | 6 | NA | NA | NA |
| | | | 2 | 68 | 63 | 62 | 57 | 57 | 56 |
| | 080-12<br>080-16<br>080-20 | 2 Pipe or 2-in Concentric | 2 | 46 | 41 | 28 | 23 | 22 | 13 |
| | | | 2-1/2 | 70 | 70 | 70 | 70 | 70 | 70 |
| | 100-16<br>100-20 | 2 Pipe or 3-in Concentric | 2-1/2 | 33 | 24 | 15 | 14 | 5 | NA |
| | | | 3 | 70 | 70 | 70 | 66 | 61 | 56 |
| | 120-20 | 2 Pipe or 3-in. Concentric | 3† no disk | 65 | 58 | 51 | 44 | 38 | 31 |
| | | | 4† no disk | 70 | 70 | 70 | 70 | 70 | 70 |
| | 140-20 | 2 Pipe or 3-in. Concentric | 3† one disk | 11 | 6 | NA | NA | NA | NA |
| | | | 3† no disk | 30 | 26 | 22 | 18 | 14 | 10 |
| | | | 4† no disk | 70 | 70 | 70 | 70 | 70 | 70 |

See notes at end of table

c. Termination kit should be positioned so it will not be affected by wind eddy (such as inside building comers) or that may allow recirculation of flue gases, airborne leaves, or light snow.

d. Termination kit should be positioned where it will not be damaged by or subjected to foreign objects, such as stones, balls, etc.

## Table 7—Maximum Allowable Pipe Length (ft) (Continued)

| ALTITUDE (FT) | UNIT SIZE | TERMINATION TYPE | PIPE DIA (IN.)* | NUMBER OF 90° ELBOWS | | | | | |
|---|---|---|---|---|---|---|---|---|---|
| | | | | 1 | 2 | 3 | 4 | 5 | 6 |
| 4001 to 5000‡ | 040-08<br>040-12 | 2 Pipe or 2-in Concentric | 1-1/2 | 60 | 55 | 50 | 45 | 44 | 39 |
| | | | 2 | 70 | 70 | 70 | 70 | 70 | 70 |
| | 060-08<br>060-12<br>060-16 | 2 Pipe or 2-in Concentric | 1-1/2 | 15 | 10 | 5 | NA | NA | NA |
| | | | 2 | 64 | 59 | 58 | 53 | 52 | 52 |
| | 080-12<br>080-16<br>080-20 | 2 Pipe or 2-in Concentric | 2 | 44 | 39 | 26 | 21 | 20 | 11 |
| | | | 2-1/2 | 70 | 70 | 70 | 70 | 70 | 70 |
| | 100-16<br>100-20 | 2 Pipe or 3-in Concentric | 2-1/2 | 31 | 22 | 13 | 12 | NA | NA |
| | | | 3 | 70 | 70 | 67 | 62 | 57 | 52 |
| | 120-20 | 2 Pipe or 3-in. Concentric | 3† no disk | 53 | 46 | 40 | 33 | 26 | 20 |
| | | | 4† no disk | 70 | 70 | 70 | 70 | 70 | 70 |
| | 140-20 | 2 Pipe or 3-in. Concentric | 3† no disk | 21 | 17 | 13 | 9 | 5 | NA |
| | | | 4† no disk | 69 | 64 | 59 | 54 | 49 | 44 |
| ALTITUDE (FT) | UNIT SIZE | TERMINATION TYPE | PIPE DIA (IN.)* | NUMBER OF 90° ELBOWS | | | | | |
| | | | | 1 | 2 | 3 | 4 | 5 | 6 |
| 5001 to 6000‡ | 040-08<br>040-12 | 2 Pipe or 2-in Concentric | 1-1/2 | 57 | 52 | 47 | 42 | 40 | 35 |
| | | | 2 | 70 | 70 | 70 | 70 | 70 | 70 |
| | 060-08<br>060-12<br>060-16 | 2 Pipe or 2-in Concentric | 1-1/2 | 14 | 9 | NA | NA | NA | NA |
| | | | 2 | 60 | 55 | 54 | 49 | 48 | 47 |
| | 080-12<br>080-16<br>080-20 | 2 Pipe or 2-in Concentric | 2 | 41 | 36 | 23 | 18 | 17 | 8 |
| | | | 2-1/2 | 70 | 70 | 70 | 70 | 70 | 70 |
| | 100-16<br>100-20 | 2 Pipe or 3-in Concentric | 2-1/2 | 29 | 21 | 12 | 11 | NA | NA |
| | | | 3 | 70 | 67 | 62 | 57 | 52 | 47 |
| | 120-20 | 2 Pipe or 3-in. Concentric | 3† no disk | 42 | 35 | 29 | 22 | 15 | 9 |
| | | | 4† no disk | 70 | 70 | 70 | 70 | 70 | 70 |
| | 140-20 | 2 Pipe or 3-in. Concentric | 3† no disk | 12 | 8 | NA | NA | NA | NA |
| | | | 4† no disk | 42 | 37 | 32 | 27 | 22 | 17 |
| ALTITUDE (FT) | UNIT SIZE | TERMINATION TYPE | PIPE DIA (IN.)* | NUMBER OF 90° ELBOWS | | | | | |
| | | | | 1 | 2 | 3 | 4 | 5 | 6 |
| 6001 to 7000‡ | 040-08<br>040-12 | 2 Pipe or 2-in Concentric | 1-1/2 | 53 | 48 | 43 | 38 | 37 | 32 |
| | | | 2 | 70 | 70 | 68 | 67 | 66 | 64 |
| | 060-08<br>060-12<br>060-16 | 2 Pipe or 2-in Concentric | 1-1/2 | 13 | 8 | NA | NA | NA | NA |
| | | | 2 | 57 | 52 | 50 | 45 | 44 | 43 |
| | 080-12<br>080-16<br>080-20 | 2 Pipe or 2-in Concentric | 2 | 38 | 33 | 21 | 16 | 15 | 6 |
| | | | 2-1/2 | 70 | 70 | 68 | 67 | 66 | 64 |
| | 100-16<br>100-20 | 2 Pipe or 3-in Concentric | 2-1/2 | 27 | 19 | 10 | 9 | NA | NA |
| | | | 3 | 68 | 63 | 58 | 53 | 48 | 43 |
| | 120-20 | 2 Pipe or 3-in. Concentric | 3† no disk | 31 | 24 | 18 | 11 | NA | NA |
| | | | 4† no disk | 70 | 70 | 70 | 70 | 67 | 62 |
| | 140-20 | 2 Pipe or 3-in. Concentric | 4† no disk | 17 | 12 | 7 | NA | NA | NA |
| ALTITUDE (FT) | UNIT SIZE | TERMINATION TYPE | PIPE DIA (IN.)* | NUMBER OF 90° ELBOWS | | | | | |
| | | | | 1 | 2 | 3 | 4 | 5 | 6 |
| 7001 to 8000‡ | 040-08<br>040-12 | 2 Pipe or 2-in Concentric | 1-1/2 | 49 | 44 | 39 | 34 | 33 | 28 |
| | | | 2 | 66 | 65 | 63 | 62 | 60 | 59 |
| | 060-08<br>060-12<br>060-16 | 2 Pipe or 2-in Concentric | 1-1/2 | 12 | 7 | NA | NA | NA | NA |
| | | | 2 | 53 | 48 | 46 | 41 | 40 | 38 |
| | 080-12<br>080-16<br>080-20 | 2 Pipe or 2-in Concentric | 2 | 36 | 31 | 19 | 14 | 12 | NA |
| | | | 2–1/2 | 66 | 65 | 63 | 62 | 60 | 59 |
| | 100-16<br>100-20 | 2 Pipe or 3-in Concentric | 2–1/2 | 25 | 17 | 8 | 7 | NA | NA |
| | | | 3 | 63 | 58 | 53 | 48 | 43 | 38 |
| | 120-20 | 2 Pipe or 3-in. Concentric | 3† no disk | 20 | 13 | 7 | NA | NA | NA |
| | | | 4† no disk | 61 | 56 | 51 | 46 | 41 | 36 |
| | 140-20 | NA | | | | | | | |

See notes at end of table

## Table 7—Maximum Allowable Pipe Length (ft) (Continued)

| ALTITUDE (FT) | UNIT SIZE | TERMINATION TYPE | PIPE DIA (IN.)* | NUMBER OF 90° ELBOWS | | | | | |
|---|---|---|---|---|---|---|---|---|---|
| | | | | 1 | 2 | 3 | 4 | 5 | 6 |
| 8001 to 9000‡ | 040-08<br>040-12 | 2 Pipe or 2-in Concentric | 1-1/2 | 46 | 41 | 36 | 31 | 29 | 24 |
| | | | 2 | 62 | 60 | 58 | 56 | 55 | 53 |
| | 060-08<br>060-12<br>060-16 | 2 Pipe or 2-in Concentric | 1-1/2 | 11 | 6 | NA | NA | NA | NA |
| | | | 2 | 49 | 44 | 42 | 37 | 35 | 34 |
| | 080-12<br>080-16<br>080-20 | 2 Pipe or 2-in Concentric | 2 | 33 | 28 | 17 | 12 | 10 | NA |
| | | | 2-1/2 | 62 | 60 | 58 | 56 | 55 | 53 |
| | 100-16<br>100-20 | 2 Pipe or 3-in Concentric | 2-1/2 | 23 | 15 | 7 | 5 | NA | NA |
| | | | 3 | 59 | 54 | 49 | 44 | 39 | 34 |
| | 120-20 | 2 Pipe or 3-in. Concentric | 3† no disk | 10 | NA | NA | NA | NA | NA |
| | | | 4† no disk | 35 | 30 | 25 | 20 | 15 | 10 |
| | 140-20 | NA | | | | | | | |
| ALTITUDE (FT) | UNIT SIZE | TERMINATION TYPE | PIPE DIA (IN.)* | NUMBER OF 90° ELBOWS | | | | | |
| | | | | 1 | 2 | 3 | 4 | 5 | 6 |
| 9001 to 10,000‡ | 040-08<br>040-12 | 2 Pipe or 2-in Concentric | 1-1/2 | 42 | 37 | 32 | 27 | 25 | 20 |
| | | | 2 | 57 | 55 | 53 | 51 | 49 | 47 |
| | 060-08<br>060-12<br>060-16 | 2 Pipe or 2-in Concentric | 2 | 45 | 40 | 38 | 33 | 31 | 29 |
| | 080-12<br>080-16<br>080-20 | 2 Pipe or 2-in Concentric | 2 | 30 | 25 | 14 | 9 | 7 | NA |
| | | | 2-1/2 | 57 | 55 | 53 | 51 | 49 | 47 |
| | 100-16<br>100-20 | 2 Pipe or 3-in Concentric | 2-1/2 | 21 | 13 | 5 | NA | NA | NA |
| | | | 3 | 54 | 49 | 44 | 39 | 34 | 29 |
| | 120-20 | 2 Pipe or 3-in. Concentric | 4† no disk | 10 | 5 | NA | NA | NA | NA |
| | 140-20 | NA | | | | | | | |

Disk usage-Unless otherwise specified, use perforated disk assembly (factory-supplied in loose parts bag). If one disk is stated, separate 2 halves of perforated disk assembly and use shouldered disk half. When using shouldered disk half, install screen side toward inlet box.
†Wide radius elbow.
‡Vent sizing for Canadian installations over 4500 ft (1370 m) above sea level are subject to acceptance by the local authorities having jurisdiction.
NA-Not Allowed; pressure switch will not make.

**NOTES:**
1. Do not use pipe size greater than those specified in table or incomplete combustion, flame disturbance, or flame sense lockout may occur.
2. Size both the combustion-air and vent pipe independently, then use the larger diameter for both pipes.
3. Assume two 45° elbows equal one 90° elbow. Long radius elbows are desirable and may be required in some cases.
4. Elbows and pipe sections within the furnace casing and at the vent termination should not be included in vent length or elbow count.
5. The minimum pipe length is 5 ft for all applications.
6. Use 3-in. diameter vent termination kit for installations requiring 4-in diameter pipe.

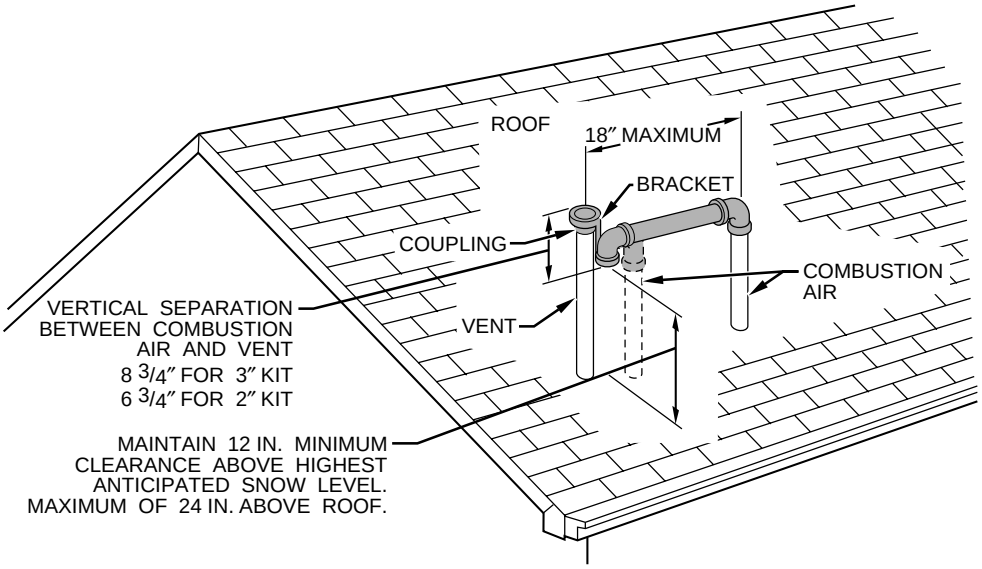


**Fig. 36—Roof Termination (Preferred)**

e. Termination kit should be positioned where vent vapors are not objectionable.

2. Cut one 4-in. diameter hole for 2-in. kit, or one 5-in. diameter hole for 3-in. kit.

3. Loosely assemble concentric vent/air termination components together using instructions in kit.

4. Slide assembled kit with rain shield REMOVED through hole.

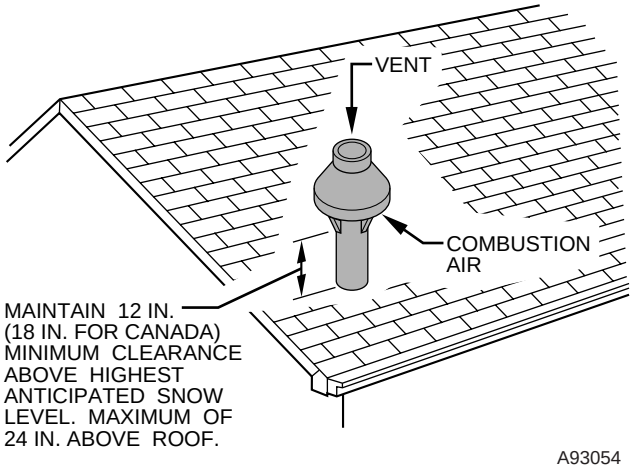


**Fig. 37—Concentric Vent and Combustion-Air Roof Termination (Preferred)**

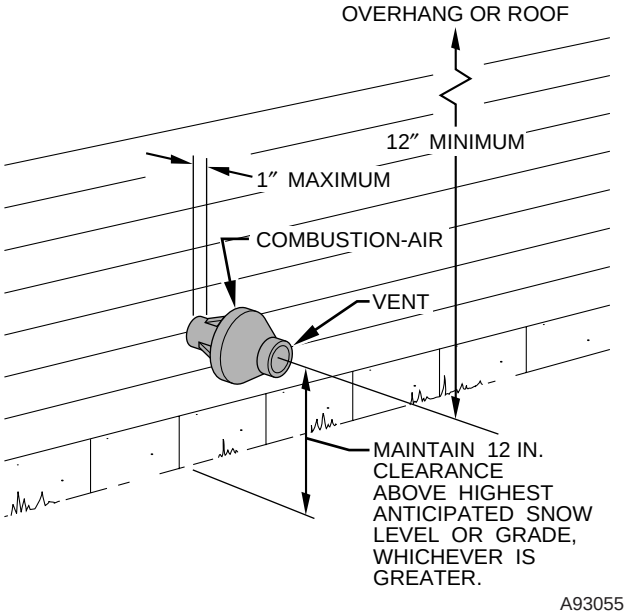


**Fig. 38—Concentric Vent and Combustion-Air Side Termination**

**NOTE:** Do not allow insulation or other materials to accumulate inside of pipe assembly when installing it through hole.

**Roof terminations**—Locate assembly through roof to appropriate height as shown in Fig. 37.

**Sidewall terminations**—Locate assembly through sidewall with rain shield positioned no more than 1-in. from wall as shown in Fig. 38.

5. Disassemble loose pipe fittings. Clean and cement using same procedures as used for system piping.
6. Check required dimensions as shown in Fig. 37 or 38.

MULTIVENTING AND VENT TERMINATIONS

When 2 or more 58MXA Furnaces are vented near each other, each furnace must be individually vented. NEVER common vent or breach vent 58MXA furnaces. When 2 or more 58MXA furnaces are vented near each other, 2 vent terminations may be installed as shown in Fig. 41, 42, 43, 44, and 45, but next vent termination must be at least 36 in. away from first 2 terminations.

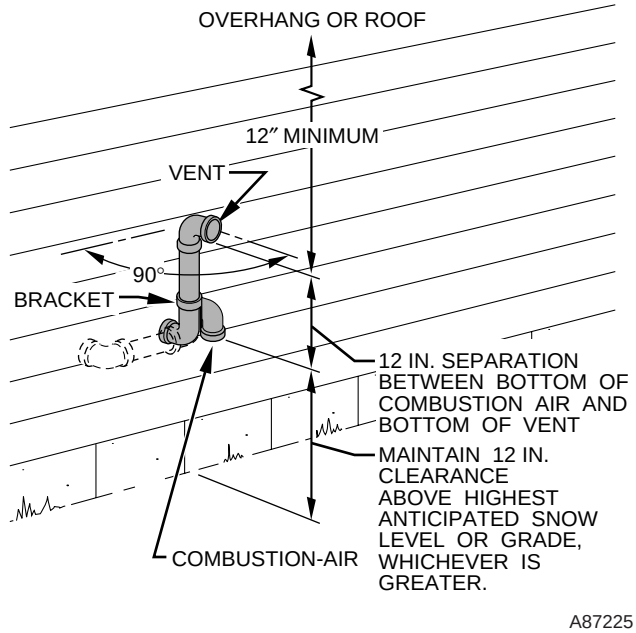


**Fig. 39—Sidewall Termination of 12 in. or More**

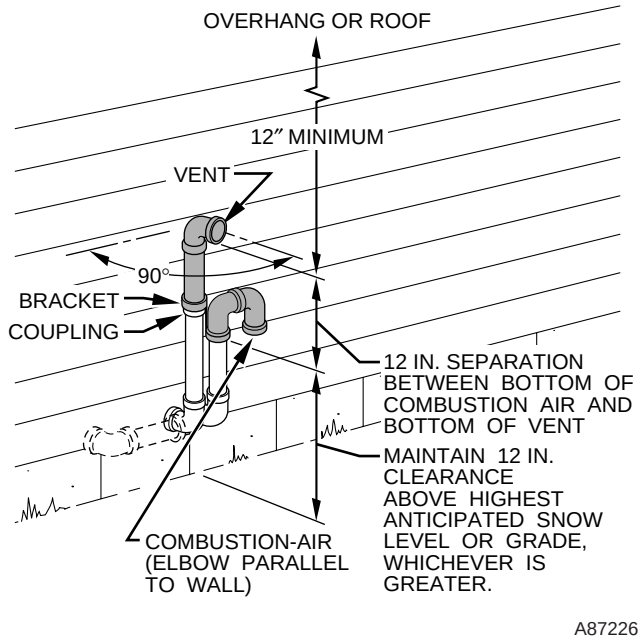


**Fig. 40—Sidewall Termination When Wall Penetration is Less than 12 in Above Snow or Grade.**

It is important that vent terminations be made as shown to avoid recirculation of flue gases. Dimension ″A″ in Fig. 41, 42, 43, 44, and 45 represents distance between pipes or rain shields, as touching or 2-in. maximum separation.

**Table 8—Maximum Allowable Exposed Vent Pipe Length (ft) With and Without Insulation in Winter Design Temperature Ambient***

| FURNACE SIZE | WINTER DESIGN TEMPERATURE (°F) | MAX PIPE DIAMETER (IN.) | WITHOUT INSULATION | WITH 3/8–IN. OR THICKER INSULATION† |
|---|---|---|---|---|
| 040 | 20 | 1.5 | 51 | 70 |
| | 0 | 1.5 | 28 | 70 |
| | -20 | 1.5 | 16 | 70 |
| | 20 | 2 | 45 | 70 |
| | 0 | 2 | 22 | 70 |
| | -20 | 2 | 10 | 58 |
| 060 | 20 | 2 | 65 | 70 |
| | 0 | 2 | 35 | 70 |
| | -20 | 2 | 20 | 70 |
| 080 | 20 | 2 | 55 | 55 |
| | 0 | 2 | 48 | 55 |
| | -20 | 2 | 30 | 55 |
| | 20 | 2.5 | 70 | 70 |
| | 0 | 2.5 | 47 | 70 |
| | -20 | 2.5 | 28 | 70 |
| 100 | 20 | 2.5 | 40 | 40 |
| | 0 | 2.5 | 40 | 40 |
| | -20 | 2.5 | 38 | 40 |
| | 20 | 3 | 70 | 70 |
| | 0 | 3 | 50 | 70 |
| | -20 | 3 | 28 | 70 |
| 120 | 20 | 3 | 70 | 70 |
| | 0 | 3 | 61 | 70 |
| | -20 | 3 | 37 | 70 |
| | 20 | 4 | 70 | 70 |
| | 0 | 4 | 48 | 70 |
| | -20 | 4 | 23 | 70 |
| 140 | 20 | 3 | 60 | 60 |
| | 0 | 3 | 60 | 60 |
| | -20 | 3 | 44 | 60 |
| | 20 | 4 | 70 | 70 |
| | 0 | 4 | 57 | 70 |
| | -20 | 4 | 30 | 70 |

* Pipe length (ft) specified for maximum pipe lengths located in unconditioned spaces. Pipes located in unconditioned space cannot exceed total allowable pipe length as specified in Table 7.
† Insulation thickness based on R value of 3.5 per in.

**⚠ CAUTION**

**UNIT MAY NOT OPERATE**

Failure to follow this caution may result in intermittent unit operation.

Unit must not be installed, operated, and then turned off and left in an unoccupied structure during cold weather when temperature drops to 32°F and below unless drain trap and drain line have adequate freeze protection. See Service and Maintenance Instructions for winterizing procedure. (See Fig. 15.)

### Step 10—Condensate Drain

GENERAL

Condensate trap is shipped installed in the blower shelf and factory connected for UPFLOW applications. Condensate trap must be RELOCATED for use in DOWNFLOW and HORIZONTAL applications.

Condensate trap MUST be used for all applications.

An external trap is not required when connecting the field drain to this condensate trap.

The field drain connection (condensate trap or drain tube coupling) is sized for l/2-in. CPVC, 1/2-in. PVC, or 5/8-in. ID tube connection.

Drain pipe and fittings must conform to ANSI standards and ASTM D1785, D2466 or D2846. CPVC or PVC cement must conform to ASTM D2564 or F493. Primer must conform to ASTM F656. In Canada, use CSA or ULC listed schedule 40 CPVC or PVC drain pipe, fittings, and cement.

When a condensate pump is required, select a pump which is approved for condensing furnace applications. To avoid condensate spillage, select a pump with an overflow switch.

Furnace condensate is mildly acidic, typically in the pH range of 3.2 to 4.5. Due to corrosive nature of this condensate, a condensate pH neutralizing filter may be desired. Check with local authorities to determine if a pH neutralizer is required.

APPLICATION

The furnace, A/C, and humidifier drains may be combined and drained together. The A/C drain must have an external, field-supplied trap prior to the furnace drain connection. All drain connections (furnace, A/C, or humidifier) must be terminated into an open or vented drain as close to the respective equipment as possible to prevent siphoning of the equipment's drain.

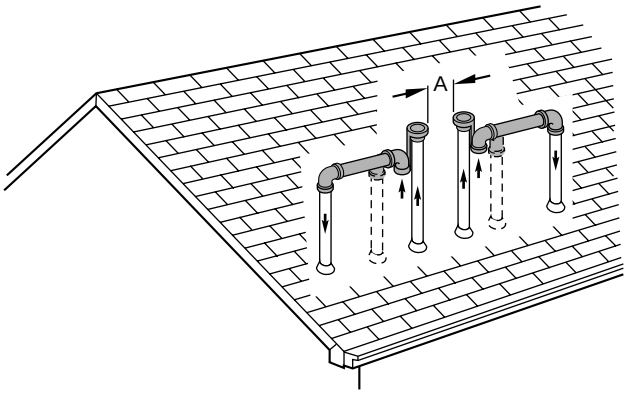


A96128

**Fig. 41—Rooftop Termination (Dimension "A" is Touching or 2-in. Maximum Separation)**

See Fig. 46 for example of possible field drain attachment using 1/2-in. CPVC or PVC tee for vent and A/C or humidifier drain connection.

Outdoor draining of the furnace is permissible if allowed by local codes. Caution should be taken when freezing ambient may freeze drain pipe and prohibit draining.

**⚠ WARNING**

**PERSONAL INJURY HAZARD**

Caution should be taken to prevent draining where slippery conditions could cause personal injuries.

Excessive condensate draining may cause saturated soil conditions which could result in damage to plants.

CONDENSATE DRAIN PROTECTION

Freezing condensate left in condensate trap and drain line may cause cracks, and possible water damage may occur. If freeze protection is required, use condensate freeze protection accessory or equivalent 3 to 6 watt per ft at 120–v and 40°F self-regulating, shielded, and waterproof heat tape. See Installation Instructions supplied with accessory or heat tape manufacturer's recommendations.

1. Fold heat tape in half and wrap on itself 3 times.
2. Locate heat tape between sides of condensate trap back. (See Fig. 47.)
3. Use wire ties to secure heat tape in place. Wire ties can be positioned in notches of condensate trap sides. (See Fig. 47.)
4. Wrap field drain pipe with remaining heat tape, approximately 1 wrap per ft.
5. When using field-supplied heat tape, follow heat tape manufacturer's instructions for all other installation guidelines.

## START-UP, ADJUSTMENTS, AND SAFETY CHECK

### Step 1—General

1. Furnace must have a 115-v power supply properly connected and grounded.

**NOTE:** Proper polarity must be maintained for 115-v wiring. If polarity is incorrect, control LED status indicator will flash rapidly and furnace will not operate.

2. Thermostat wire connections at terminals R, W, G, and Y/Y2 must be made at 24-v terminal block on furnace control.
3. Natural gas service pressure must not exceed 0.5 psig (14-in. wc), and be no less than 0.16 psig (4.5-in. wc).
4. Blower access panel must be in place to complete 115-v electrical circuit to furnace.

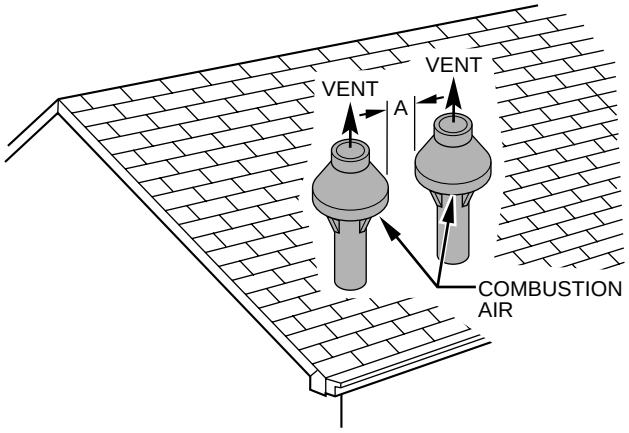


A93056

**Fig. 42—Concentric Vent and Combustion-Air Roof Termination (Dimension "A" is Touching or 2-in. Maximum Separation)**

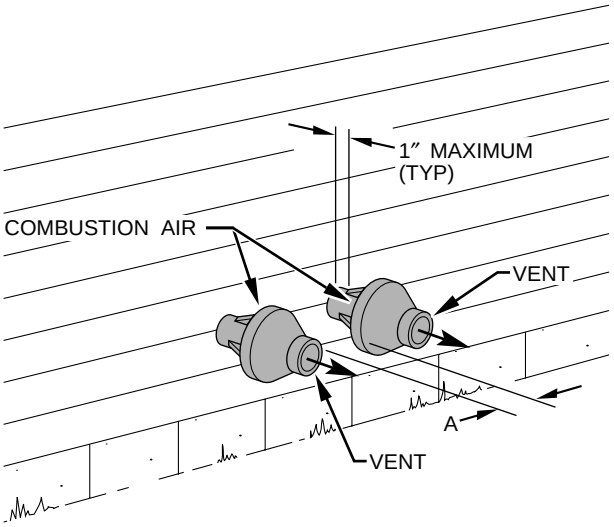


A93057

**Fig. 43—Concentric Vent and Combustion-Air Side Termination (Dimension "A" is Touching or 2-in. Maximum Separation)**

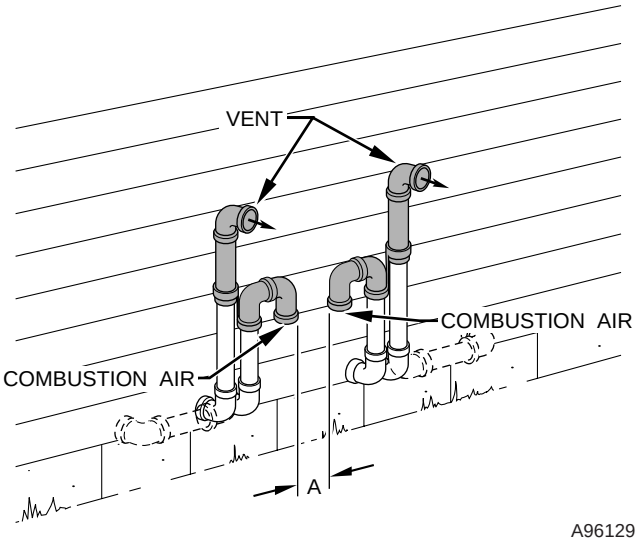


**Fig. 44—Raised Sidewall Termination When Wall Penetration is 12 in. or Less Above Snow or Grade (Dimension "A" is Touching or 2-in. Maximum Separation)**

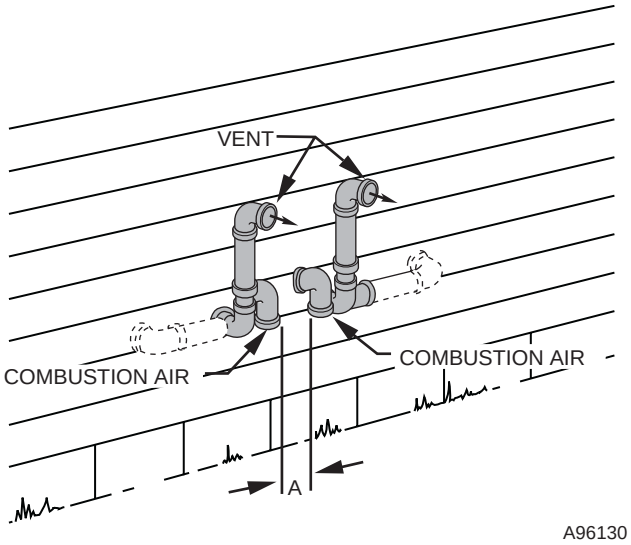


**Fig. 45—Sidewall Termination of More than 12 in. (Dimension "A" is Touching or 2-in. Maximum Separation)**

**⚠ CAUTION**

**FIRE HAZARD**

Failure to follow this caution may result in intermittent unit operation.

These furnaces are equipped with a manual reset limit switch in burner box. This switch will open and shut off power to gas valve if an overheat condition (flame rollout) occurs in burner enclosure. Correct inadequate combustion-air supply or improper venting condition and reset switch. DO NOT jumper this switch.

Before operating furnace, check flame roll-out manual reset switch for continuity. If necessary, press button to reset switch.

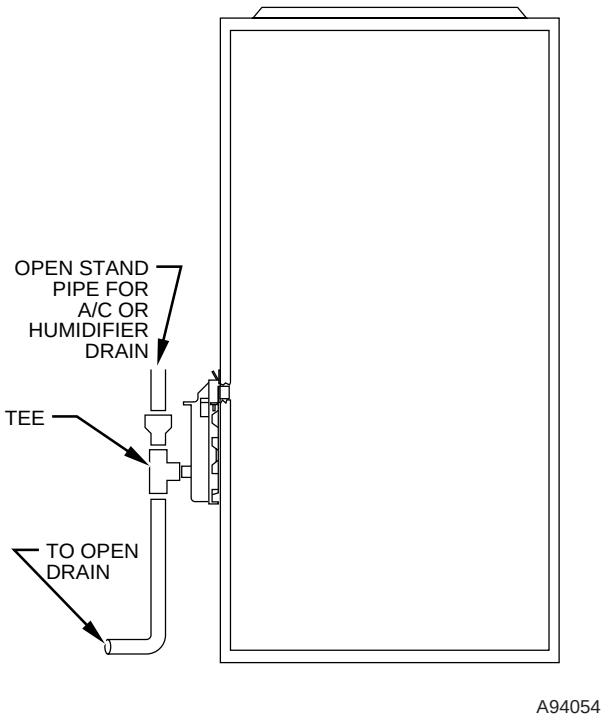


**Fig. 46—Example of Field Drain Attachment**

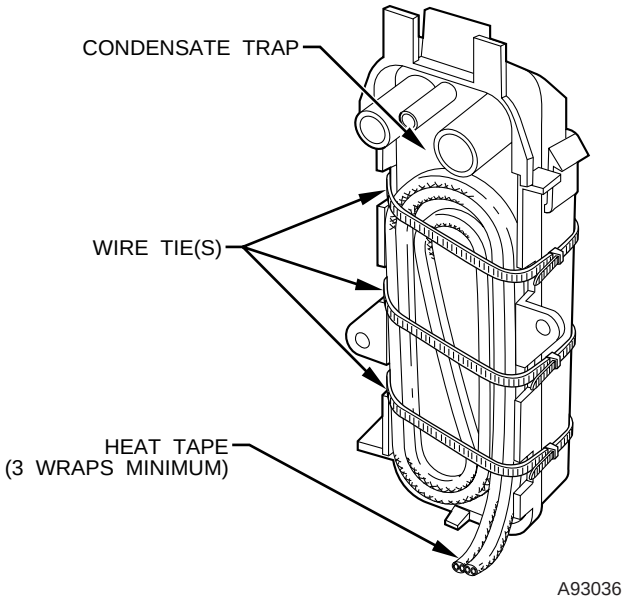


**Fig. 47—Condensate Trap Heat Tape**

**Step 2—Prime Condensate Trap With Water**

**⚠ CAUTION**

**UNIT MAY NOT OPERATE**

Failure to follow this caution may result in intermittent unit operation.

Condensate trap must be PRIMED or proper draining may not occur. The condensate trap has 2 internal chambers which can ONLY be primed by pouring water into the inducer drain side of condensate trap.

1. Remove upper inducer housing drain connection cap. (See Fig. 48.)
2. Connect field-supplied 1/2-in. ID tube to upper inducer housing drain connection.

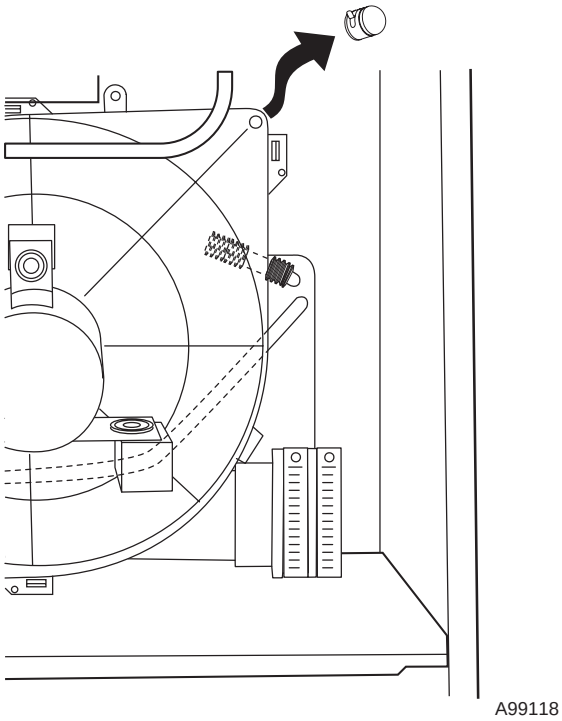


**Fig. 48—Inducer Housing Drain Tube Cap**

3. Insert field-supplied funnel into tube.
4. Pour 1 quart of water into funnel/tube. Water should run through inducer housing, overfill condensate trap, and flow into open field drain. (See Fig. 49.)
5. Remove funnel and tube from inducer housing and replace drain connection cap and clamp.

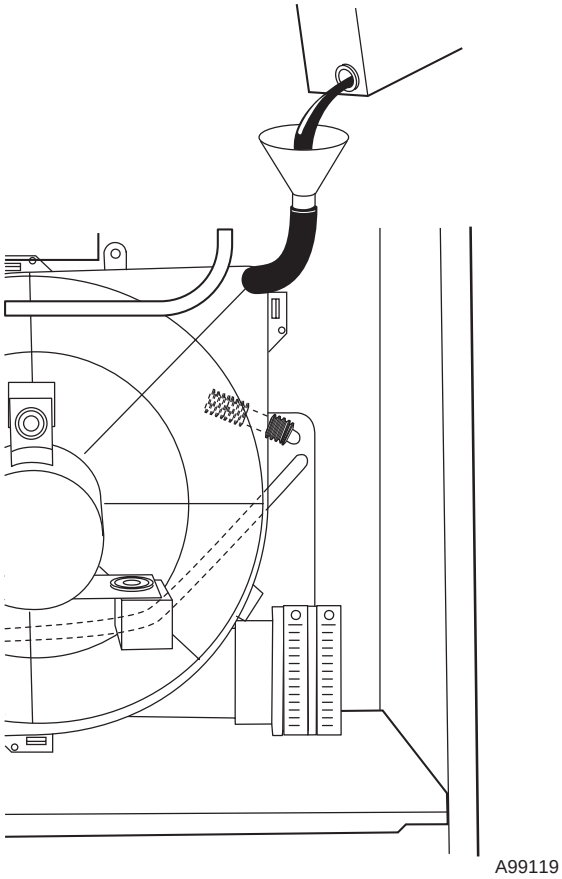


**Fig. 49—Filling Condensate Trap**

### Step 3—Purge Gas Lines

If not previously done, purge lines after all connections have been made and check for leaks.

**⚠ WARNING**

**FIRE AND EXPLOSION HAZARD**

Failure to follow this warning could result in a fire, explosion, personal injury, or death.

Never purge a gas line into a combustion chamber. Never test for gas leaks with an open flame. Use a commercially available soap solution made specifically for the detection of leaks to check all connections.

### Step 4—Sequence of Operation

**⚠ CAUTION**

→ **FURNACE MAY NOT OPERATE**

Failure to follow this caution may result in furnace operation stopping and water pipes freezing during cold weather.

Furnace control must be grounded for proper operation, or control will lock out. Control is grounded through green/yellow wire connected to gas valve and burner box screw.

Using schematic diagram, follow sequence of operation through different modes. (See Fig. 30.) Read and follow wiring diagram carefully.

**NOTE:** If a power interruption occurs during a call for heat (W), the control will start a 90-second blower-only ON period two seconds after power is restored, if the thermostat is still calling for gas heating. The Amber status code LED light will flash code 12 during the 90-second period, after which the LED will be ON continuous, as long as no faults are detected. After the 90-second period, the furnace will respond to the thermostat normally.

The blower door must be installed for power to be conducted through the blower door interlock switch ILK to the furnace control CPU, transformer TRAN, inducer motor IDM, blower motor BLWM, hot-surface igniter HSI, and gas valve GV.

HEATING MODE

(See Fig. 27 for thermostat connections.)

The wall thermostat ″calls for heat,″ closing the R to W circuit. The furnace control performs a self-check, verifies the pressure switch contacts PRS are open, and starts the inducer motor IDM.

a. **Inducer Prepurge Period**- As the inducer motor IDM comes up to speed, the pressure switch contacts PRS close to begin a 15-second prepurge period.

b. **Igniter Warm-Up**- At the end of the prepurge period, the Hot-Surface igniter HSI is energized for a 17-second igniter warm-up period.

c. **Trial-for-Ignition Sequence**- When the igniter warm-up period is completed the main gas valve relay contacts GVR-1 and -2 close to energize the gas valve GV, the gas valve opens, and 24 vac power is supplied for a field-installed humidifier at the HUM terminal. The gas valve GV permits gas flow to the burners where it is ignited by the Hot Surface Igniter HSI. Five seconds after the GVR-1 closes, a 2-second flame period begins. The HSI igniter will remain energized until the flame is sensed or until the 2-second flame proving period begins.

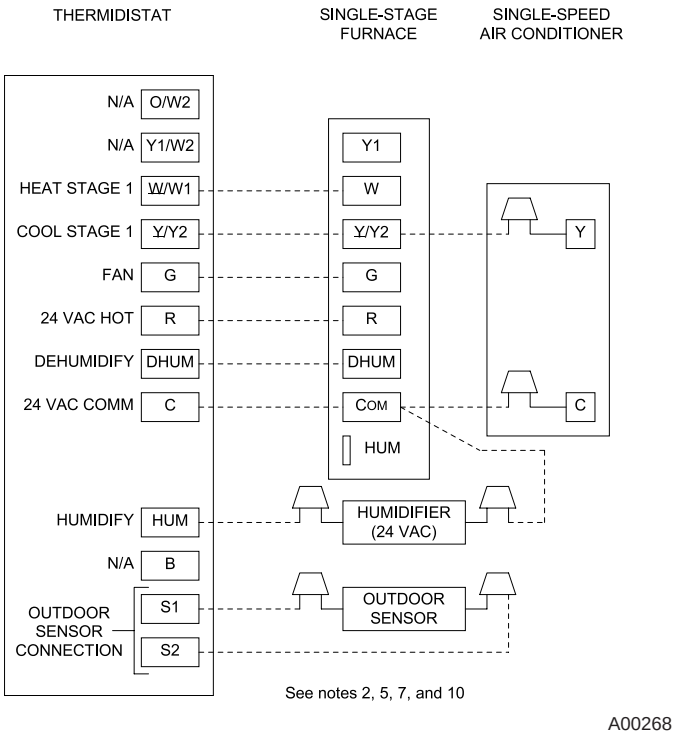


**Fig. 50–Single-Stage Furnace with Single-Speed Air Conditioner**

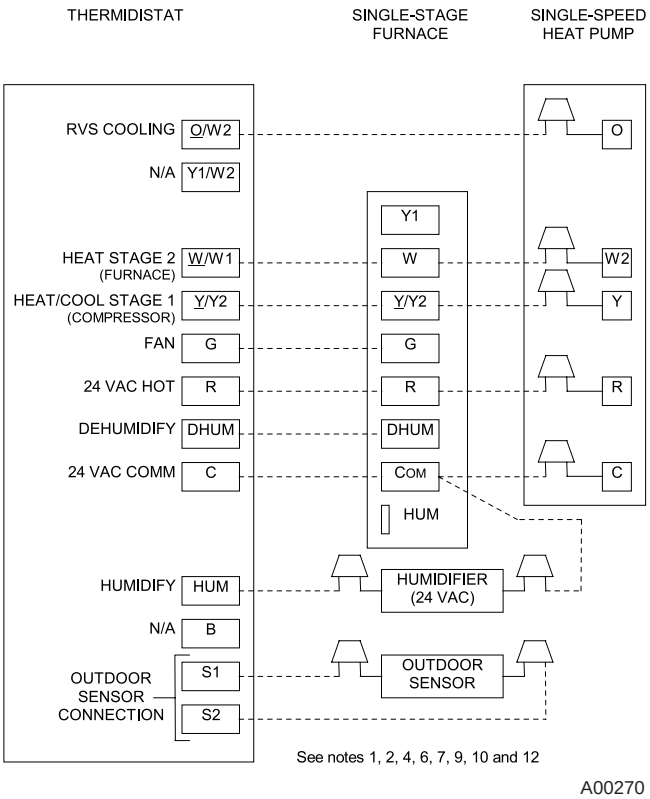


**Fig. 52–Single-Stage Furnace with Single-Speed Heat Pump (Dual Fuel)**

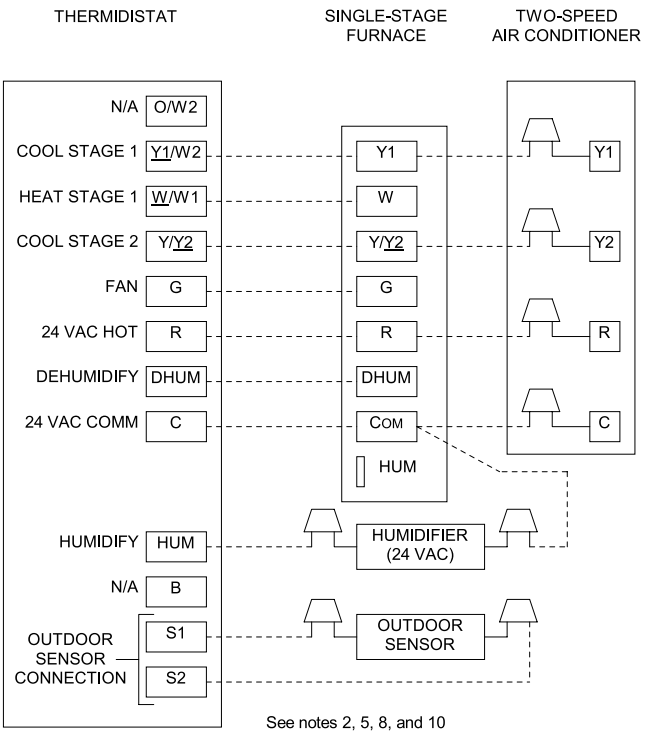


**Fig. 51–Single Stage Furnace with Two-Speed Air Conditioner**

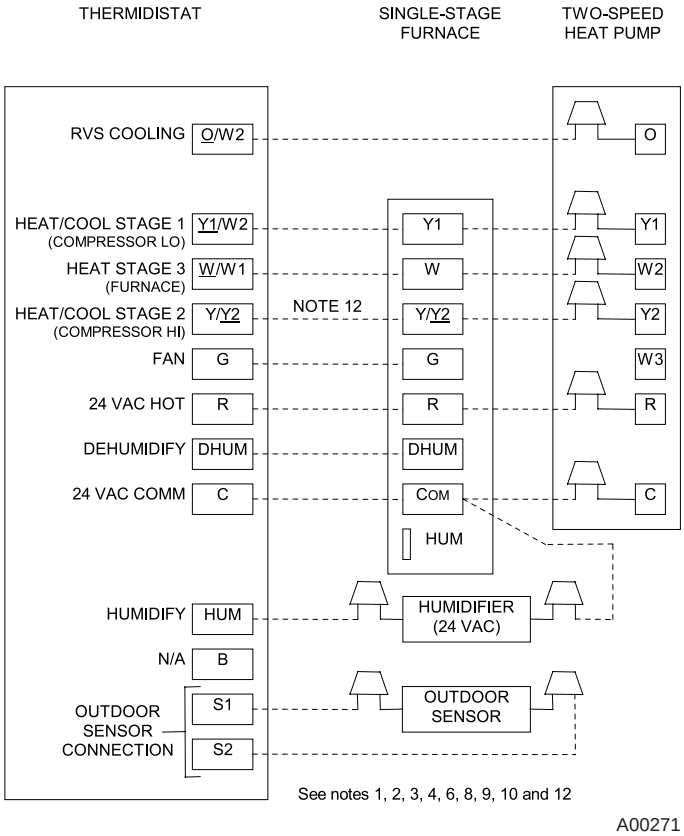


**Fig. 53–Single-Stage Furnace with Two-Speed Heat Pump (Dual Fuel)**

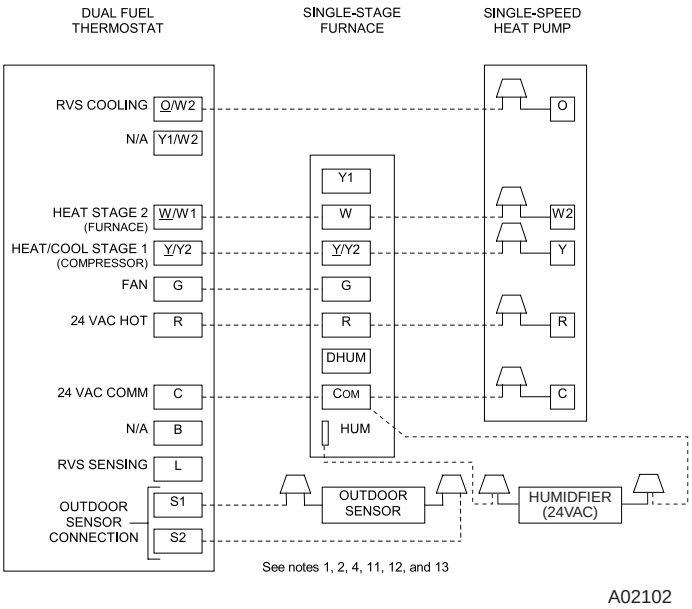


**Fig. 54–Dual Fuel Thermostat with Single-Stage Furnace and Single-Speed Heat Pump**

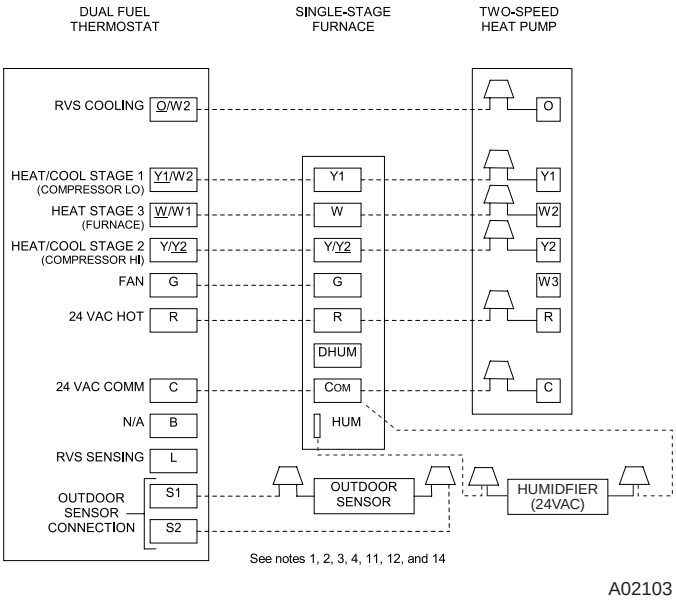


**Fig. 55–Dual Fuel Thermostat with Single-Stage Furnace and Two-Speed Heat Pump**

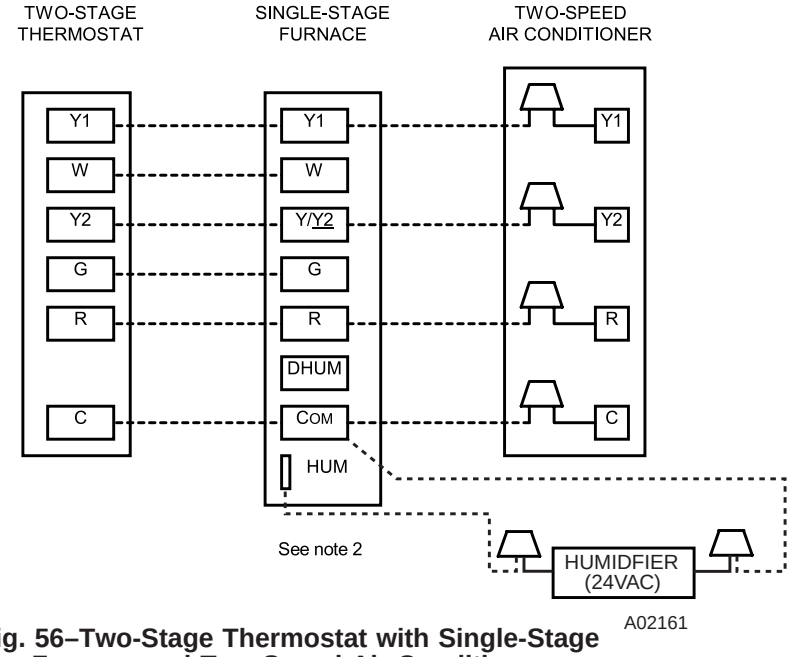


**Fig. 56–Two-Stage Thermostat with Single-Stage Furnace and Two-Speed Air Conditioner**

## Notes For Figure 50-56

1. Heat pump **MUST** have a high pressure switch for dual fuel applications.
2. Refer to outdoor equipment Installation Instructions for additional information and setup procedure.
3. Select the "ZONE" position on the two-speed heat pump control.
4. Outdoor Air Temperature Sensor must be attached in all dual fuel applications.
5. Dip switch No. 1 on Thermidistat should be set in **OFF** position for air conditioner installations. This is factory default.
6. Dip switch No. 1 on Thermidistat should be set in**ON** position for heat pump installations.
7. Dip switch No. 2 on Thermidistat should be set in **OFF** position for single-speed compressor operation. This is factory default.
8. Dip switch No. 2 on Thermidistat should be set in **ON** position for two-speed compressor operation.
9. Configuration Option No. 10 "Dual Fuel Selection" must be turned**ON** in all dual fuel applications.
10. **NO** connection should be made to the furnace HUM terminal when using a Thermidistat.
11. The RVS Sensing terminal "L" should not be connected. This is internally used to sense defrost operation.
12. **DO NOT SELECT** the "FURNACE INTERFACE" or "BALANCE POINT" option on the two-speed heat pump control board. This is controlled internally by the Thermidistat/Dual Fuel Thermostat.
13. Dip switch D on Dual Fuel Thermostat should be set in **OFF** position for single-speed compressor operation. This is factory default.
14. Dip switch D on Dual Fuel Thermostat should be set in **ON** position for two-speed compressor operation.

d. **Flame-Proving-** When the burner flame is proved at the flame-proving sensor electrode FSE, the furnace control CPU begins the blower-ON delay period and continues to hold the gas valve GV open. If the burner flame is not proved within two seconds, the control CPU will close the gas valve GV, and the control CPU will repeat the ignition sequence for up to three more Trials-For-Ignition before going to Ignition-Lockout. **Lockout will be reset** automatically after three hours, or by momentarily interrupting 115 vac power to the furnace, or by interrupting 24 vac power at SEC1 or SEC2 to the furnace control CPU (not at W, G, R, etc.).
If flame is proved when flame should not be present, the furnace control CPU will lock out of Gas-Heating mode and operate the inducer motor IDM until flame is no longer proved.

e. **Blower-On Delay-** If the burner flame is proven, the blower motor is energized on HEAT speed 66 seconds (040 through 120 sizes) or 45 seconds (140 size) after the gas valve GV is energized.
Simultaneously, the electronic air cleaner terminal EAC-1 is energized and remains energized as long as the blower motor BLWM is energized.

f. **Blower-Off Delay-** When the thermostat is satisfied, the R-to-W circuit is opened, de-energizing the gas valve GV, stopping gas flow to the burners, and de-energizing the humidifier terminal HUM. The inducer motor IDM will remain energized for a 15-second (040 through 120 sizes) or 5-second (140 size) post-purge period. The blower motor BLWM and air cleaner terminal EAC-1 will remain energized for 90, 120, 150, or 180 seconds (depending on the blower-OFF delay selection). The furnace control CPU is factory-set for a 120-second blower-OFF delay.

COOLING MODE

The thermostat "calls for cooling."

a. **Single-Speed Cooling**
(See Fig. 27, 50, 52, and 54 for thermostat connections)

The thermostat closes the R to G-and-Y circuits. The R to Y circuit starts the outdoor unit, and the R to G-and-Y/Y2 circuits start the furnace blower motor BLWM on COOL speed.
The electronic air cleaner terminal EAC-1 is energized with 115 vac when the blower motor BLWM is operating.
When the thermostat is satisfied, the R to G-and-Y circuits are opened. The outdoor unit will stop, and the furnace blower motor BLWM will continue operating on the COOL speed for an additional 90 seconds. Jumper Y/Y2 to DHUM to reduce the cooling off-delay to 5 seconds. (See Fig. 31.)

b. **Two-Speed Cooling**
(See Fig. 27, 51, 53, 55, and 56 for thermostat connections.)

The thermostat closes the R to G-and-Y1 circuits for low-cooling or closes the R to G-and-Y1-and-Y2 circuits for high-cooling. The R to Y1 circuit starts the outdoor unit on low-cooling speed, and the R to G-and-Y1 circuit starts the furnace blower motor BLWM on low-cool speed (same speed as FAN). The R to Y1-and-Y2 circuits start the outdoor unit on high-cooling speed, and the R to G-and-Y/Y2 circuits start the furnace blower motor BLWM on COOL speed.
The electronic air cleaner terminal EAC-1 is energized with 115 vac whenever the blower motor BLWM is operating.
When the thermostat is satisfied, the R to G and-Y1 or R to G and-Y1 and-Y2 circuits are opened. The outdoor unit stops, and the furnace blower BLWM and electronic air cleaner terminal EAC-1 will remain energized for an additional 90 seconds. Jumper Y1 to DHUM to reduce the cooling off-delay to 5 seconds. (See Fig. 31.)

THERMIDISTAT MODE

(See Fig. 50, 51, 52, and 53 for Thermidistat connections.)

The dehumidification output, DHUM on the Thermidistat should be connected to the furnace control thermostat terminal DHUM. When there is a dehumidify demand, the DHUM input is activated, which means 24 vac signal is removed from the DHUM input terminal. In other words, the DHUM input logic is reversed. The DHUM input is turned ON when no dehumidify demand exists. When 24 vac is initially detected by the furnace control on the DHUM input, the furnace control operates in Thermidistat mode. If the DHUM input is low or OFF for more than 48 hours, the furnace control reverts back to non-Thermidistat mode.

The cooling operation described in item 2. above also applies to operation with a Thermidistat. The exceptions are listed below:

a. When the R to G-and-Y1 circuit is closed and there is a demand for dehumidification, the furnace blower motor BLWM will continue running at low-cool speed (same speed as FAN).

b. When the R to G-and Y/Y2 circuit is closed and there is a demand for dehumidification, the furnace blower motor BLWM will drop the blower speed from COOL to HEAT for a maximum of 10 minutes before reverting back to COOL speed. If there is still a demand for dehumidification after 20 minutes, the furnace control CPU will drop the blower speed back to HEAT speed. This alternating 10-minute cycle will continue as long as there is a call for cooling.

c. When the ″call for cooling″ is satisfied while there is a demand for dehumidification, the cooling blower-off delay is decreased from 90 seconds to 5 seconds.

CONTINUOUS BLOWER MODE

When the R to G circuit is closed by the thermostat, the blower motor BLWM will operate on continuous-blower speed (can be adjusted to FAN, HEAT, or COOL speed) at the thermostat. Factory default is FAN speed. Terminal EAC-1 is energized as long as the blower motor BLWM is energized.

During a call for heat, the blower BLWM will stop during igniter warm-up (17 seconds), ignition (7 seconds), and blower-ON delay (66 or 45 seconds for 040 through 120 sizes or for 140 size), allowing the furnace heat exchangers to heat up more quickly, then restarts at the end of the blower-ON delay period at HEAT speed.

In heating, the furnace control CPU will hold the blower motor BLWM at HEAT speed during the selected blower-OFF delay period before reverting to continuous-blower speed.

When the thermostat ″calls for low-cooling″, the blower motor BLWM will switch to operate at low-cool speed (same speed as FAN). When the thermostat is satisfied, the blower motor BLWM will operate an additional 90 seconds on low-cool speed (same speed as FAN) before reverting back to continuous-blower speed.

When the thermostat ″calls for high-cooling″, the blower motor BLWM will operate at COOL speed. When the thermostat is satisfied, the blower motor BLWM will operate an additional 90 seconds on COOL speed before reverting back to continuous-blower speed.

When the R to G circuit is opened, the blower motor BLWM will continue operating for an additional 5 seconds, if no other function requires blower motor BLWM operation.

**Continuous Blower Speed Selection from Thermostat** -To select different continuous-blower speeds from the room thermostat, momentarily turn off the FAN switch or push-button on the room thermostat for 1-3 seconds after the blower motor BLWM is operating. The furnace control CPU will shift the continuous-blower speed from the factory setting of FAN to HEAT speed. Momentarily turning off the FAN switch again at the thermostat will shift the continuous-blower speed from HEAT to COOL. Repeating the procedure will shift the continuous-blower speed from COOL back to FAN speed. The selection can be changed as many times as desired and is stored in the memory to be automatically used following a power interruption.

HEAT PUMP MODE

(See Fig. 52, 53, 54, and 55 for thermostat connections.)

When installed with a heat pump, the furnace control automatically changes the blower timing sequence to avoid long blower off times during demand defrost cycles. When the R to W-and-Y1 or R to W-and-Y1-and-G circuits are energized the furnace control CPU will switch to or turn on the blower motor BLWM at HEAT speed, and begin a heating cycle. The blower motor BLWM will remain on until the end of the prepurge period, then shut off for 24 seconds then come back on at HEAT speed. When the W input signal disappears, the furnace control begins a normal inducer post-purge period and the blower remains running at HEAT speed for the selected blower-OFF delay period then switches to low-cool speed (same speed as FAN). If the R to W-and-Y1-and-G signals disappear at the same time, the blower motor BLWM will remain on for the selected blower-OFF delay period. If the R to W-and-Y1 signals disappear, leaving the G signal, the blower motor BLWM will remain on for the selected blower-OFF delay period then switch to continuous-blower speed.

When the R to W-and-Y/Y2, R to W-and-Y/Y2-and-G, R to W-and-Y1-and-Y/Y2, or R to W-and-Y1-and-Y/Y2-and-G circuits are energized the furnace control CPU will switch to or turn on the blower motor BLWM at HEAT speed, and begin a heating cycle. The blower motor BLWM will remain on until the end of the prepurge period, then shut off for 24 seconds then come back on at HEAT speed. When the W input signal disappears, the furnace control begins a normal inducer post-purge period and the blower switches to COOL speed after a 3-second delay. If the R to W-and-Y/Y2-and-G or R to W-and-Y1-and-Y/Y2-and-G signals disappear at the same time, the blower motor BLWM will remain on for the selected blower-OFF delay period. If the R to W-and-Y/Y2 or R to W-and-Y1-and-Y/Y2 signals disappear, leaving the G signal, the blower motor BLWM will remain on for the selected blower-OFF delay period then switch to continuous-blower speed.

COMPONENT TEST

**NOTE:** The furnace control component test allows all components to run for a short time; except the gas valve and humidifier terminal HUM are not energized for safety reasons. The EAC-1 terminal is energized when the blower is energized. This feature helps diagnose a system problem in case of a component failure. The component test feature will not operate if any thermostat signal is present ant the control and not until all time delays are completed.

To Begin Component Self-Test:

**⚠ WARNING**

**ELECTRICAL SHOCK HAZARD**

Failure to follow this warning could result in electrical shock, personal injury, or death.

Blower access panel door switch opens 115-v power to control. No component operation can occur. Caution must be taken when manually closing this switch for service purposes.

1. Remove blower access door.
2. Disconnect the thermostat R lead from furnace control.
3. Manually close blower door switch.
4. For approximately 2 sec, short (jumper) the COM-24v terminal on control to the TEST/TWIN 3/16-inch quick-connect terminal on control until the LED goes off. Remover jumper from terminals. (See Fig. 31.)

**NOTE:** If TEST/TWIN and COM-24v terminals are jumpered longer than 2 sec, LED will flash rapidly and ignore component test request.

Component test sequence is as follows:

a. LED will display previous status code 4 times.

b. Inducer motor starts and continues to run until Step g of component test sequence.

c. After 7 seconds the hot surface igniter is energized for 15 sec., then off.

d. Blower motor operates on Continuous-FAN speed for 10 sec.

e. Blower motor operates on HEAT speed for 10 sec.

f. Blower motor operates on COOL speed for 10 sec.

g. Inducer motor stops.

5. Reconnect R lead to furnace control, remove tape from blower door switch, and re-install blower door.
6. Operate furnace per instruction on outer door.
7. Verify furnace shut down by lowering thermostat setting below room temperature.
8. Verify that furnace restarts by raising thermostat setting above room temperature.

### Step 5—Adjustments

SET GAS INPUT RATE

Furnace gas input rate on rating plate is for installations at altitudes up to 2000 ft.

In the U.S.A., the input ratings for altitudes above 2000 ft must be reduced by 2 percent for each 1000 ft above sea level.

In Canada, the input ratings must be derated by 5 percent for altitudes between 2001 ft to 4500 ft above sea level.

Furnace input rate must be within ± 2 percent of input on furnace rating plate adjusted for altitude.

1. Determine natural gas orifice size and manifold pressure for correct input.

a. Obtain average gas heat value (at installed altitude) from local gas supplier.

b. Obtain average gas specific gravity from local gas supplier.

c. Verify furnace model and size. Table 9 can only be used for model 58MXA furnaces with rating plate heating inputs (1000's Btuh) of 040 through 120. Table 10 can only be used for model 58MXA furnaces with a heating size of 140.

d. Find installation altitude in Table 9 or 10.

**NOTE:** For Canadian altitudes of 2001 to 4500 ft, use U.S.A. altitudes of 2001 to 3000 ft in Table 9 or 10.

e. Find closest natural gas heat value and specific gravity in Table 9 or 10.

f. Follow heat value and specific gravity lines to point of intersection to find orifice size and manifold pressure settings for proper operation.

EXAMPLE: (0-2000 ft altitude using Table 9)
Heating value = 1050 Btu/cu ft
Specific gravity = 0.62
Therefore: Orifice No. 45 and
Manifold pressure 3.6-in. wc
* Furnace is shipped with No. 45 orifices. In this example all main burner orifices are the correct size and do not need to be changed to obtain the proper input rate.

Check and verify burner orifice size in furnace. NEVER ASSUME ORIFICE SIZE; ALWAYS CHECK AND VERIFY.

2. Adjust manifold pressure to obtain input rate.

**NOTE:** Manifold pressure must always be measured with burner enclosure front REMOVED. Gas meter must always be clocked with burner enclosure front INSTALLED.

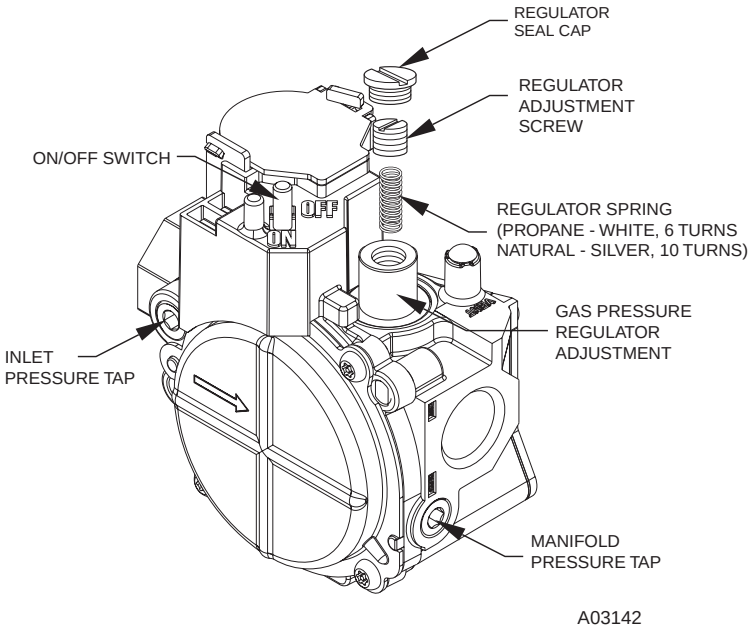


**Fig. 57—Redundant Automatic Gas Control Valve**

a. Remove burner enclosure front.

b. Remove seal cap that conceals adjustment screw for gas valve regulator. (See Fig. 57.)

c. Jumper R and W thermostat connections on control to start furnace.

d. Turn adjusting screw, counterclockwise (out) to decrease manifold pressure or clockwise (in) to increase manifold pressure.

**NOTE:** This furnace has been approved for a manifold pressure of 3.2 in. wc to 3.8 in. wc when installed at altitudes up to 2000 ft. For altitudes above 2000 ft, the manifold pressure can be adjusted from 2.0 in. wc to 3.8 in. wc. If manifold pressure is outside this range, change burner orifices to obtain pressure in this range.

## Table 9—Model 58MXA Orifice Size and Manifold Pressure for Correct Input For Use with 040 through 120 Size Furnaces Only (Tabulated Data is Based on 20,000 Btuh per Burner, Derated 2% for Each 1000 Ft Above Sea Level) *

| ALTITUDE RANGE (FT) | | AVG GAS HEAT VALUE AT ALTITUDE (BTU/CU FT) | SPECIFIC GRAVITY OF NATURAL GAS | | | | | | | | | |
|---|---|---|---|---|---|---|---|---|---|---|---|---|
| | | | 0.58 | | 0.60 | | 0.62 | | 0.64 | | 0.66 | |
| | | | Orifice No. | Manifold Pressure | Orifice No. | Manifold Pressure | Orifice No. | Manifold Pressure | Orifice No. | Manifold Pressure | Orifice No. | Manifold Pressure |
| U.S.A. and Canada | | **850** | 43 | 3.7 | 43 | 3.8 | 42 | 3.2 | 42 | 3.3 | 42 | 3.4 |
| | | **875** | 43 | 3.5 | 43 | 3.6 | 43 | 3.7 | 43 | 3.8 | 42 | 3.2 |
| | | **900** | 44 | 3.7 | 43 | 3.4 | 43 | 3.5 | 43 | 3.6 | 43 | 3.7 |
| | **0** | **925** | 44 | 3.5 | 44 | 3.7 | 44 | 3.8 | 43 | 3.4 | 43 | 3.5 |
| | | **950** | 44 | 3.4 | 44 | 3.5 | 44 | 3.6 | 44 | 3.7 | 44 | 3.8 |
| | **to** | **975** | 44 | 3.2 | 44 | 3.3 | 44 | 3.4 | 44 | 3.5 | 44 | 3.6 |
| | | **1000** | **45** | **3.7** | **45** | **3.8** | 44 | 3.2 | 44 | 3.4 | 44 | 3.5 |
| | **2000** | **1025** | **45** | **3.5** | **45** | **3.6** | **45** | **3.7** | 44 | 3.2 | 44 | 3.3 |
| | | **1050** | **45** | **3.3** | **45** | **3.4** | **45** | **3.6** | **45** | **3.7** | **45** | **3.8** |
| | **0%** | **1075** | **45** | **3.2** | **45** | **3.3** | **45** | **3.4** | **45** | **3.5** | **45** | **3.6** |
| | **derate** | **1100** | 47 | 3.6 | 47 | 3.7 | **45** | **3.2** | **45** | **3.4** | **45** | **3.5** |

| ALTITUDE RANGE (Ft) | | Avg GAS HEAT VALUE AT ALTITUDE (Btu/cu ft) | SPECIFIC GRAVITY OF NATURAL GAS | | | | | | | | | |
|---|---|---|---|---|---|---|---|---|---|---|---|---|
| | | | 0.58 | | 0.60 | | 0.62 | | 0.64 | | 0.66 | |
| | | | Orifice No. | Manifold Pressure | Orifice No. | Manifold Pressure | Orifice No. | Manifold Pressure | Orifice No. | Manifold Pressure | Orifice No. | Manifold Pressure |
| U.S.A. and Canada | **U.S.A.** | **775** | 43 | 3.8 | 42 | 3.2 | 42 | 3.3 | 42 | 3.4 | 42 | 3.5 |
| | **Altitudes** | **800** | 43 | 3.5 | 43 | 3.7 | 43 | 3.8 | 42 | 3.2 | 42 | 3.3 |
| | **2001 to** | **825** | 44 | 3.8 | 43 | 3.4 | 43 | 3.6 | 43 | 3.7 | 43 | 3.8 |
| | **3000** | **850** | 44 | 3.6 | 44 | 3.7 | 44 | 3.8 | 43 | 3.5 | 43 | 3.6 |
| | **or** | **875** | 44 | 3.4 | 44 | 3.5 | 44 | 3.6 | 44 | 3.7 | 43 | 3.4 |
| | **Canada** | **900** | 44 | 3.2 | 44 | 3.3 | 44 | 3.4 | 44 | 3.5 | 44 | 3.6 |
| | **Altitudes** | **925** | **45** | **3.7** | **45** | **3.8** | 44 | 3.2 | 44 | 3.3 | 44 | 3.4 |
| | **2001 to** | **950** | **45** | **3.5** | **45** | **3.6** | **45** | **3.7** | **45** | **3.8** | 44 | 3.3 |
| | **4500** | **975** | **45** | **3.3** | **45** | **3.4** | **45** | **3.5** | **45** | **3.6** | **45** | **3.8** |
| | **5%** | **1000** | **45** | **3.1** | **45** | **3.2** | **45** | **3.4** | **45** | **3.5** | **45** | **3.6** |
| | **derate** | **1025** | **45** | **3.0** | **45** | **3.1** | **45** | **3.2** | **45** | **3.3** | **45** | **3.4** |

| ALTITUDE RANGE (Ft) | | Avg GAS HEAT VALUE AT ALTITUDE (Btu/cu ft) | SPECIFIC GRAVITY OF NATURAL GAS | | | | | | | | | |
|---|---|---|---|---|---|---|---|---|---|---|---|---|
| | | | 0.58 | | 0.60 | | 0.62 | | 0.64 | | 0.66 | |
| | | | Orifice No. | Manifold Pressure | Orifice No. | Manifold Pressure | Orifice No. | Manifold Pressure | Orifice No. | Manifold Pressure | Orifice No. | Manifold Pressure |
| U.S.A. Only | | **750** | 43 | 3.7 | 43 | 3.8 | 42 | 3.3 | 42 | 3.4 | 42 | 3.5 |
| | | **775** | 43 | 3.5 | 43 | 3.6 | 43 | 3.7 | 43 | 3.8 | 42 | 3.2 |
| | | **800** | 44 | 3.7 | 43 | 3.4 | 43 | 3.5 | 43 | 3.6 | 43 | 3.7 |
| | **3001** | **825** | 44 | 3.5 | 44 | 3.6 | 44 | 3.8 | 43 | 3.4 | 43 | 3.5 |
| | | **850** | 44 | 3.3 | 44 | 3.4 | 44 | 3.5 | 44 | 3.7 | 44 | 3.8 |
| | **to** | **875** | **45** | **3.8** | 44 | 3.2 | 44 | 3.3 | 44 | 3.5 | 44 | 3.6 |
| | | **900** | **45** | **3.6** | **45** | **3.7** | **45** | **3.8** | 44 | 3.3 | 44 | 3.4 |
| | **4000** | **925** | **45** | **3.4** | **45** | **3.5** | **45** | **3.6** | **45** | **3.7** | 44 | 3.2 |
| | | **950** | **45** | **3.2** | **45** | **3.3** | **45** | **3.4** | **45** | **3.5** | **45** | **3.7** |
| | **7%** | **975** | **45** | **3.0** | **45** | **3.2** | **45** | **3.3** | **45** | **3.4** | **45** | **3.5** |
| | **derate** | **1000** | **45** | **2.9** | **45** | **3.0** | **45** | **3.1** | **45** | **3.2** | **45** | **3.3** |

* Orifice numbers 45 shown in **BOLD** are factory installed.

Percents of derate are based on midpoints of U.S. altitude ranges.

## TABLE 9—Model 58MXA Orifice Size and Manifold Pressure for Correct Input (Continued) for Use With 040 Through 120 Size Furnaces Only (Tabulated Data Based on 20,000 Btuh per Burner, Derated 2 Percent for Each 1000 ft Above Sea Level)*

| ALTITUDE RANGE (FT) | | AVG GAS HEAT VALUE AT ALTITUDE (BTU/CU FT) | SPECIFIC GRAVITY OF NATURAL GAS | | | | | | | | | |
|---|---|---|---|---|---|---|---|---|---|---|---|---|
| | | | 0.58 | | 0.60 | | 0.62 | | 0.64 | | 0.66 | |
| | | | Orifice No. | Manifold Pressure | Orifice No. | Manifold Pressure | Orifice No. | Manifold Pressure | Orifice No. | Manifold Pressure | Orifice No. | Manifold Pressure |
| U.S.A. Only | | **725** | 43 | 3.7 | 43 | 3.8 | 42 | 3.2 | 42 | 3.3 | 42 | 3.4 |
| | | **750** | 43 | 3.4 | 43 | 3.5 | 43 | 3.7 | 43 | 3.8 | 42 | 3.2 |
| | | **775** | 44 | 3.7 | 44 | 3.8 | 43 | 3.4 | 43 | 3.5 | 43 | 3.7 |
| | **4001** | **800** | 44 | 3.5 | 44 | 3.6 | 44 | 3.7 | 44 | 3.8 | 43 | 3.4 |
| | | **825** | 44 | 3.2 | 44 | 3.4 | 44 | 3.5 | 44 | 3.6 | 44 | 3.7 |
| | **to** | **850** | **45** | **3.7** | **45** | **3.8** | 44 | 3.3 | 44 | 3.4 | 44 | 3.5 |
| | | **875** | **45** | **3.5** | **45** | **3.6** | **45** | **3.7** | 44 | 3.2 | 44 | 3.3 |
| | **5000** | **900** | **45** | **3.3** | **45** | **3.4** | **45** | **3.5** | **45** | **3.6** | **45** | **3.8** |
| | **9%** | **925** | **45** | **3.1** | **45** | **3.2** | **45** | **3.3** | **45** | **3.4** | **45** | **3.6** |
| | **derate** | **950** | **45** | **3.0** | **45** | **3.1** | **45** | **3.2** | **45** | **3.3** | **45** | **3.4** |

| ALTITUDE RANGE (Ft) | | Avg GAS HEAT VALUE AT ALTITUDE (Btu/cu ft) | SPECIFIC GRAVITY OF NATURAL GAS | | | | | | | | | |
|---|---|---|---|---|---|---|---|---|---|---|---|---|
| | | | 0.58 | | 0.60 | | 0.62 | | 0.64 | | 0.66 | |
| | | | Orifice No. | Manifold Pressure | Orifice No. | Manifold Pressure | Orifice No. | Manifold Pressure | Orifice No. | Manifold Pressure | Orifice No. | Manifold Pressure |
| U.S.A. Only | | **700** | 43 | 3.6 | 43 | 3.7 | 42 | 3.2 | 42 | 3.3 | 42 | 3.4 |
| | | **725** | 43 | 3.4 | 43 | 3.5 | 43 | 3.6 | 43 | 3.7 | 43 | 3.8 |
| | | **750** | 44 | 3.6 | 44 | 3.7 | 43 | 3.4 | 43 | 3.5 | 43 | 3.6 |
| | | **775** | 44 | 3.4 | 44 | 3.5 | 44 | 3.6 | 44 | 3.7 | 43 | 3.4 |
| | **5001** | **800** | 44 | 3.2 | 44 | 3.3 | 44 | 3.4 | 44 | 3.5 | 44 | 3.6 |
| | | **825** | **45** | **3.6** | **45** | **3.7** | 44 | 3.2 | 44 | 3.3 | 44 | 3.4 |
| | **to** | **850** | **45** | **3.4** | **45** | **3.5** | **45** | **3.6** | **45** | **3.8** | 44 | 3.2 |
| | | **875** | **45** | **3.2** | **45** | **3.3** | **45** | **3.4** | **45** | **3.6** | **45** | **3.7** |
| | **6000** | **900** | **45** | **3.0** | **45** | **3.1** | **45** | **3.3** | **45** | **3.4** | **45** | **3.5** |
| | | **925** | **45** | **2.9** | **45** | **3.0** | **45** | **3.1** | **45** | **3.2** | **45** | **3.3** |
| | | **950** | **45** | **2.7** | **45** | **2.8** | **45** | **2.9** | **45** | **3.0** | **45** | **3.1** |
| | **11%** | **975** | **45** | **2.6** | **45** | **2.7** | **45** | **2.8** | **45** | **2.9** | **45** | **2.9** |
| | **derate** | **1000** | **45** | **2.5** | **45** | **2.5** | **45** | **2.6** | **45** | **2.7** | **45** | **2.8** |

| ALTITUDE RANGE (Ft) | | Avg GAS HEAT VALUE AT ALTITUDE (Btu/cu ft) | SPECIFIC GRAVITY OF NATURAL GAS | | | | | | | | | |
|---|---|---|---|---|---|---|---|---|---|---|---|---|
| | | | 0.58 | | 0.60 | | 0.62 | | 0.64 | | 0.66 | |
| | | | Orifice No. | Manifold Pressure | Orifice No. | Manifold Pressure | Orifice No. | Manifold Pressure | Orifice No. | Manifold Pressure | Orifice No. | Manifold Pressure |
| U.S.A. Only | | **650** | 42 | 3.2 | 42 | 3.3 | 42 | 3.4 | 42 | 3.5 | 42 | 3.6 |
| | | **675** | 43 | 3.6 | 43 | 3.7 | 43 | 3.8 | 42 | 3.2 | 42 | 3.3 |
| | | **700** | 44 | 3.8 | 43 | 3.4 | 43 | 3.6 | 43 | 3.7 | 43 | 3.8 |
| | **6001** | **725** | 44 | 3.6 | 44 | 3.7 | 44 | 3.8 | 43 | 3.4 | 43 | 3.5 |
| | | **750** | 44 | 3.3 | 44 | 3.4 | 44 | 3.6 | 44 | 3.7 | 44 | 3.8 |
| | **to** | **775** | **45** | **3.8** | 44 | 3.2 | 44 | 3.3 | 44 | 3.4 | 44 | 3.5 |
| | | **800** | **45** | **3.5** | **45** | **3.7** | **45** | **3.8** | 44 | 3.2 | 44 | 3.3 |
| | **7000** | **825** | **45** | **3.3** | **45** | **3.4** | **45** | **3.6** | **45** | **3.7** | **45** | **3.8** |
| | **13%** | **850** | **45** | **3.1** | **45** | **3.2** | **45** | **3.4** | **45** | **3.5** | **45** | **3.6** |
| | **derate** | **875** | **45** | **3.0** | **45** | **3.1** | **45** | **3.2** | **45** | **3.3** | **45** | **3.4** |

* Orifice numbers 45 shown in **BOLD** are factory installed.

Percents of derate are based on midpoints of U.S. Altitude ranges.

## Table 9—Model 58MXA Orifice Size and Manifold Pressure for Correct Input (Continued)
## For Use with 040 through 120 Size Furnaces Only
## (Tabulated Data Based on 20,000 Btuh per Burner, Derated 2% for Each 1000 Ft Above Sea Level) *

| ALTITUDE RANGE (FT) | | AVG GAS HEAT VALUE AT ALTITUDE (BTU/CU FT) | SPECIFIC GRAVITY OF NATURAL GAS | | | | | | | | | |
|---|---|---|---|---|---|---|---|---|---|---|---|---|
| | | | 0.58 | | 0.60 | | 0.62 | | 0.64 | | 0.66 | |
| | | | Orifice No. | Manifold Pressure | Orifice No. | Manifold Pressure | Orifice No. | Manifold Pressure | Orifice No. | Manifold Pressure | Orifice No. | Manifold Pressure |
| U.S.A. Only | | **625** | 43 | 3.8 | 42 | 3.3 | 42 | 3.4 | 42 | 3.5 | 42 | 3.6 |
| | | **650** | 43 | 3.5 | 43 | 3.7 | 43 | 3.8 | 42 | 3.2 | 42 | 3.3 |
| | | **675** | 44 | 3.8 | 43 | 3.4 | 43 | 3.5 | 43 | 3.6 | 43 | 3.7 |
| | **7001** | **700** | 44 | 3.5 | 44 | 3.6 | 44 | 3.8 | 43 | 3.4 | 43 | 3.5 |
| | | **725** | 44 | 3.3 | 44 | 3.4 | 44 | 3.5 | 44 | 3.6 | 44 | 3.7 |
| | **to** | **750** | **45** | **3.7** | **45** | **3.8** | 44 | 3.3 | 44 | 3.4 | 44 | 3.5 |
| | | **775** | **45** | **3.5** | **45** | **3.6** | **45** | **3.7** | **45** | **3.8** | 44 | 3.3 |
| | **8000** | **800** | **45** | **3.3** | **45** | **3.4** | **45** | **3.5** | **45** | **3.6** | **45** | **3.7** |
| | **15%** | **825** | **45** | **3.1** | **45** | **3.2** | **45** | **3.3** | **45** | **3.4** | **45** | **3.5** |
| | **derate** | **850** | **45** | **2.9** | **45** | **3.0** | **45** | **3.1** | **45** | **3.2** | **45** | **3.3** |

| ALTITUDE RANGE (Ft) | | Avg GAS HEAT VALUE AT ALTITUDE (Btu/cu ft) | SPECIFIC GRAVITY OF NATURAL GAS | | | | | | | | | |
|---|---|---|---|---|---|---|---|---|---|---|---|---|
| | | | 0.58 | | 0.60 | | 0.62 | | 0.64 | | 0.66 | |
| | | | Orifice No. | Manifold Pressure | Orifice No. | Manifold Pressure | Orifice No. | Manifold Pressure | Orifice No. | Manifold Pressure | Orifice No. | Manifold Pressure |
| U.S.A. Only | | **600** | 43 | 3.8 | 42 | 3.3 | 42 | 3.4 | 42 | 3.5 | 42 | 3.6 |
| | | **625** | 43 | 3.5 | 43 | 3.6 | 43 | 3.8 | 42 | 3.2 | 42 | 3.3 |
| | **8001** | **650** | 44 | 3.7 | 43 | 3.4 | 43 | 3.5 | 43 | 3.6 | 43 | 3.7 |
| | | **675** | 44 | 3.5 | 44 | 3.6 | 44 | 3.7 | 44 | 3.8 | 43 | 3.4 |
| | **to** | **700** | 44 | 3.2 | 44 | 3.3 | 44 | 3.4 | 44 | 3.6 | 44 | 3.7 |
| | | **725** | **45** | **3.6** | **45** | **3.8** | 44 | 3.2 | 44 | 3.3 | 44 | 3.4 |
| | **9000** | **750** | **45** | **3.4** | **45** | **3.5** | **45** | **3.6** | **45** | **3.8** | 44 | 3.2 |
| | **17%** | **775** | **45** | **3.2** | **45** | **3.3** | **45** | **3.4** | **45** | **3.5** | **45** | **3.6** |
| | **derate** | **800** | **45** | **3.0** | **45** | **3.1** | **45** | **3.2** | **45** | **3.3** | **45** | **3.4** |

| ALTITUDE RANGE (ft) | | Avg GAS HEAT VALUE AT ALTITUDE (Btu/cu ft) | SPECIFIC GRAVITY OF NATURAL GAS | | | | | | | | | |
|---|---|---|---|---|---|---|---|---|---|---|---|---|
| | | | 0.58 | | 0.60 | | 0.62 | | 0.64 | | 0.66 | |
| | | | Orifice No. | Manifold Pressure | Orifice No. | Manifold Pressure | Orifice No. | Manifold Pressure | Orifice No. | Manifold Pressure | Orifice No. | Manifold Pressure |
| U.S.A. Only | | **575** | 43 | 3.8 | 42 | 3.2 | 42 | 3.3 | 42 | 3.5 | 42 | 3.6 |
| | | **600** | 43 | 3.5 | 43 | 3.6 | 43 | 3.7 | 42 | 3.2 | 42 | 3.3 |
| | **9001** | **625** | 44 | 3.7 | 44 | 3.8 | 43 | 3.5 | 43 | 3.6 | 43 | 3.7 |
| | | **650** | 44 | 3.4 | 44 | 3.5 | 44 | 3.7 | 44 | 3.8 | 43 | 3.4 |
| | **to** | **675** | **45** | **3.8** | 44 | 3.3 | 44 | 3.4 | 44 | 3.5 | 44 | 3.6 |
| | | **700** | **45** | **3.6** | **45** | **3.7** | **45** | **3.8** | 44 | 3.3 | 44 | 3.4 |
| | **10,000** | **725** | **45** | **3.3** | **45** | **3.4** | **45** | **3.6** | **45** | **3.7** | **45** | **3.8** |
| | **19%** | **750** | **45** | **3.1** | **45** | **3.2** | **45** | **3.3** | **45** | **3.4** | **45** | **3.5** |
| | **derate** | **775** | **45** | **2.9** | **45** | **3.0** | **45** | **3.1** | **45** | **3.2** | **45** | **3.3** |

Orifice numbers 45 shown in **BOLD** are factory installed.

Percents of derate are based on midpoints of U.S. altitude ranges.

## Table 10—Model 58MXA Orifice Size and Manifold Pressure for Correct Input For Use with 140 Size Furnaces Only (Tabulated Data Based on 23,000 Btuh per Burner, Derated 2% for Each 1000 Ft Above Sea Level) *

| ALTITUDE RANGE (FT) | | AVG GAS HEAT VALUE AT ALTITUDE (BTU/CU FT) | SPECIFIC GRAVITY OF NATURAL GAS | | | | | | | | | |
|---|---|---|---|---|---|---|---|---|---|---|---|---|
| | | | 0.58 | | 0.60 | | 0.62 | | 0.64 | | 0.66 | |
| | | | Orifice No. | Manifold Pressure | Orifice No. | Manifold Pressure | Orifice No. | Manifold Pressure | Orifice No. | Manifold Pressure | Orifice No. | Manifold Pressure |
| U.S.A. and Canada | | **850** | 41 | 3.6 | 41 | 3.7 | 41 | 3.8 | 40 | 3.6 | 40 | 3.8 |
| | | **875** | 42 | 3.8 | 41 | 3.5 | 41 | 3.6 | 41 | 3.7 | 41 | 3.8 |
| | | **900** | 42 | 3.5 | 42 | 3.7 | 42 | 3.8 | 41 | 3.5 | 41 | 3.6 |
| | **0** | **925** | 42 | 3.4 | 42 | 3.5 | 42 | 3.6 | 42 | 3.7 | 42 | 3.8 |
| | | **950** | 42 | 3.2 | 42 | 3.3 | 42 | 3.4 | 42 | 3.5 | 42 | 3.6 |
| | **to** | **975** | **43** | **3.7** | **43** | **3.8** | 42 | 3.2 | 42 | 3.3 | 42 | 3.4 |
| | | **1000** | **43** | **3.5** | **43** | **3.6** | **43** | **3.7** | 42 | 3.2 | 42 | 3.3 |
| | **2000** | **1025** | **43** | **3.3** | **43** | **3.4** | **43** | **3.6** | **43** | **3.7** | **43** | **3.8** |
| | | **1050** | **43** | **3.2** | **43** | **3.3** | **43** | **3.4** | **43** | **3.5** | **43** | **3.6** |
| | **0%** | **1075** | 44 | 3.5 | 44 | 3.6 | **43** | **3.2** | **43** | **3.3** | **43** | **3.4** |
| | **derate** | **1100** | 44 | 3.3 | 44 | 3.4 | 44 | 3.5 | **43** | **3.2** | **43** | **3.3** |

| ALTITUDE RANGE (ft) | | AVG GAS HEAT VALUE AT ALTITUDE (Btu/cu ft) | SPECIFIC GRAVITY OF NATURAL GAS | | | | | | | | | |
|---|---|---|---|---|---|---|---|---|---|---|---|---|
| | | | 0.58 | | 0.60 | | 0.62 | | 0.64 | | 0.66 | |
| | | | Orifice No. | Manifold Pressure | Orifice No. | Manifold Pressure | Orifice No. | Manifold Pressure | Orifice No. | Manifold Pressure | Orifice No. | Manifold Pressure |
| U.S.A. and Canada | **U.S.A.** | **775** | 41 | 3.7 | 41 | 3.8 | 40 | 3.6 | 40 | 3.7 | 39 | 3.6 |
| | **Altitudes** | **800** | 42 | 3.8 | 41 | 3.6 | 41 | 3.7 | 41 | 3.8 | 40 | 3.6 |
| | **2001 to** | **825** | 42 | 3.6 | 42 | 3.7 | 41 | 3.5 | 41 | 3.6 | 41 | 3.7 |
| | **3000 or** | **850** | 42 | 3.4 | 42 | 3.5 | 42 | 3.6 | 42 | 3.7 | 41 | 3.5 |
| | **Canada** | **875** | 42 | 3.2 | 42 | 3.3 | 42 | 3.4 | 42 | 3.5 | 42 | 3.6 |
| | **Altitudes** | **900** | **43** | **3.7** | **43** | **3.8** | 42 | 3.2 | 42 | 3.3 | 42 | 3.4 |
| | **2001 to** | **925** | **43** | **3.5** | **43** | **3.6** | **43** | **3.7** | 42 | 3.2 | 42 | 3.3 |
| | **4500** | **950** | **43** | **3.3** | **43** | **3.4** | **43** | **3.5** | **43** | **3.7** | **43** | **3.8** |
| | | **975** | **43** | **3.1** | **43** | **3.3** | **43** | **3.4** | **43** | **3.5** | **43** | **3.6** |
| | **5%** | **1000** | **43** | **3.0** | **43** | **3.1** | **43** | **3.2** | **43** | **3.3** | **43** | **3.4** |
| | **derate** | **1025** | **43** | **2.8** | **43** | **2.9** | **43** | **3.0** | **43** | **3.1** | **43** | **3.2** |

| ALTITUDE RANGE (ft) | | AVG GAS HEAT VALUE AT ALTITUDE (Btu/cu ft) | SPECIFIC GRAVITY OF NATURAL GAS | | | | | | | | | |
|---|---|---|---|---|---|---|---|---|---|---|---|---|
| | | | 0.58 | | 0.60 | | 0.62 | | 0.64 | | 0.66 | |
| | | | Orifice No. | Manifold Pressure | Orifice No. | Manifold Pressure | Orifice No. | Manifold Pressure | Orifice No. | Manifold Pressure | Orifice No. | Manifold Pressure |
| U.S.A. Only | | **750** | 41 | 3.6 | 41 | 3.8 | 40 | 3.6 | 40 | 3.7 | 40 | 3.8 |
| | | **775** | 42 | 3.8 | 41 | 3.5 | 41 | 3.6 | 41 | 3.7 | 40 | 3.6 |
| | | **800** | 42 | 3.5 | 42 | 3.7 | 42 | 3.8 | 41 | 3.5 | 41 | 3.6 |
| | **3001** | **825** | 42 | 3.3 | 42 | 3.4 | 42 | 3.6 | 42 | 3.7 | 42 | 3.8 |
| | | **850** | **43** | **3.8** | 42 | 3.2 | 42 | 3.4 | 42 | 3.5 | 42 | 3.6 |
| | **to** | **875** | **43** | **3.6** | **43** | **3.7** | 42 | 3.2 | 42 | 3.3 | 42 | 3.4 |
| | | **900** | **43** | **3.4** | **43** | **3.5** | **43** | **3.6** | **43** | **3.8** | 42 | 3.2 |
| | **4000** | **925** | **43** | **3.2** | **43** | **3.3** | **43** | **3.5** | **43** | **3.6** | **43** | **3.7** |
| | | **950** | **43** | **3.1** | **43** | **3.2** | **43** | **3.3** | **43** | **3.4** | **43** | **3.5** |
| | **7%** | **975** | **43** | **2.9** | **43** | **3.0** | **43** | **3.1** | **43** | **3.2** | **43** | **3.3** |
| | **derate** | **1000** | **43** | **2.8** | **43** | **2.9** | **43** | **3.0** | **43** | **3.0** | **43** | **3.1** |

* Orifice numbers 43 shown in **BOLD** are factory installed.

Percents of derate are based on midpoints of U.S. altitude ranges.

## Table 10—Model 58MXA Orifice Size and Manifold Pressure for Correct Input (Continued) for Use With 140 Size Furnaces Only (Tabulated Data Based on 23,000 Btuh per Burner, Derated 2% for Each 1000 Ft Above Sea Level) *

| ALTITUDE RANGE (FT) | | AVG GAS HEAT VALUE AT ALTITUDE (BTU/CU FT) | SPECIFIC GRAVITY OF NATURAL GAS | | | | | | | | | |
|---|---|---|---|---|---|---|---|---|---|---|---|---|
| | | | 0.58 | | 0.60 | | 0.62 | | 0.64 | | 0.66 | |
| | | | Orifice No. | Manifold Pressure | Orifice No. | Manifold Pressure | Orifice No. | Manifold Pressure | Orifice No. | Manifold Pressure | Orifice No. | Manifold Pressure |
| U.S.A. Only | | **725** | 41 | 3.6 | 41 | 3.7 | 41 | 3.8 | 40 | 3.6 | 40 | 3.8 |
| | | **750** | 42 | 3.7 | 42 | 3.8 | 41 | 3.6 | 41 | 3.7 | 41 | 3.8 |
| | **4001** | **775** | 42 | 3.5 | 42 | 3.6 | 42 | 3.7 | 42 | 3.8 | 41 | 3.6 |
| | | **800** | 42 | 3.3 | 42 | 3.4 | 42 | 3.5 | 42 | 3.6 | 42 | 3.7 |
| | **to** | **825** | **43** | **3.7** | 42 | 3.2 | 42 | 3.3 | 42 | 3.4 | 42 | 3.5 |
| | | **850** | **43** | **3.5** | **43** | **3.6** | **43** | **3.8** | 42 | 3.2 | 42 | 3.3 |
| | **5000** | **875** | **43** | **3.3** | **43** | **3.4** | **43** | **3.6** | **43** | **3.7** | **43** | **3.8** |
| | | **900** | **43** | **3.1** | **43** | **3.3** | **43** | **3.4** | **43** | **3.5** | **43** | **3.6** |
| | **9%** | **925** | **43** | **3.0** | **43** | **3.1** | **43** | **3.2** | **43** | **3.3** | **43** | **3.4** |
| | **derate** | **950** | **43** | **2.8** | **43** | **2.9** | **43** | **3.0** | **43** | **3.1** | **43** | **3.2** |

| ALTITUDE RANGE (ft) | | AVG GAS HEAT VALUE AT ALTITUDE (Btu/cu ft) | SPECIFIC GRAVITY OF NATURAL GAS | | | | | | | | | |
|---|---|---|---|---|---|---|---|---|---|---|---|---|
| | | | 0.58 | | 0.60 | | 0.62 | | 0.64 | | 0.66 | |
| | | | Orifice No. | Manifold Pressure | Orifice No. | Manifold Pressure | Orifice No. | Manifold Pressure | Orifice No. | Manifold Pressure | Orifice No. | Manifold Pressure |
| U.S.A. Only | | **700** | 41 | 3.5 | 41 | 3.7 | 41 | 3.8 | 40 | 3.6 | 40 | 3.7 |
| | | **725** | 42 | 3.7 | 42 | 3.8 | 41 | 3.5 | 41 | 3.6 | 41 | 3.8 |
| | | **750** | 42 | 3.4 | 42 | 3.5 | 42 | 3.7 | 42 | 3.8 | 41 | 3.5 |
| | | **775** | 42 | 3.2 | 42 | 3.3 | 42 | 3.4 | 42 | 3.5 | 42 | 3.7 |
| | **5001** | **800** | **43** | **3.7** | **43** | **3.8** | 42 | 3.2 | 42 | 3.3 | 42 | 3.4 |
| | | **825** | **43** | **3.5** | **43** | **3.6** | **43** | **3.7** | **43** | **3.8** | 42 | 3.2 |
| | **to** | **850** | **43** | **3.3** | **43** | **3.4** | **43** | **3.5** | **43** | **3.6** | **43** | **3.7** |
| | | **875** | **43** | **3.1** | **43** | **3.2** | **43** | **3.3** | **43** | **3.4** | **43** | **3.5** |
| | **6000** | **900** | **43** | **2.9** | **43** | **3.0** | **43** | **3.1** | **43** | **3.2** | **43** | **3.3** |
| | | **925** | **43** | **2.7** | **43** | **2.8** | **43** | **2.9** | **43** | **3.0** | **43** | **3.1** |
| | | **950** | **43** | **2.6** | **43** | **2.7** | **43** | **2.8** | **43** | **2.9** | **43** | **3.0** |
| | **11%** | **975** | **43** | **2.5** | **43** | **2.6** | **43** | **2.6** | **43** | **2.7** | **43** | **2.8** |
| | **derate** | **1000** | **43** | **2.3** | **43** | **2.4** | **43** | **2.5** | **43** | **2.6** | **43** | **2.7** |

| ALTITUDE RANGE (ft) | | AVG GAS HEAT VALUE AT ALTITUDE (Btu/cu ft) | SPECIFIC GRAVITY OF NATURAL GAS | | | | | | | | | |
|---|---|---|---|---|---|---|---|---|---|---|---|---|
| | | | 0.58 | | 0.60 | | 0.62 | | 0.64 | | 0.66 | |
| | | | Orifice No. | Manifold Pressure | Orifice No. | Manifold Pressure | Orifice No. | Manifold Pressure | Orifice No. | Manifold Pressure | Orifice No. | Manifold Pressure |
| U.S.A. Only | | **650** | 41 | 3.8 | 40 | 3.6 | 40 | 3.7 | 40 | 3.8 | 39 | 3.7 |
| | | **675** | 41 | 3.5 | 41 | 3.6 | 41 | 3.7 | 40 | 3.6 | 40 | 3.7 |
| | **6001** | **700** | 42 | 3.6 | 42 | 3.7 | 41 | 3.5 | 41 | 3.6 | 41 | 3.7 |
| | | **725** | 42 | 3.4 | 42 | 3.5 | 42 | 3.6 | 42 | 3.7 | 42 | 3.8 |
| | **to** | **750** | **43** | **3.8** | 42 | 3.3 | 42 | 3.4 | 42 | 3.5 | 42 | 3.6 |
| | | **775** | **43** | **3.6** | **43** | **3.7** | **43** | **3.8** | 42 | 3.3 | 42 | 3.4 |
| | **7000** | **800** | **43** | **3.4** | **43** | **3.5** | **43** | **3.6** | **43** | **3.7** | **43** | **3.8** |
| | | **825** | **43** | **3.2** | **43** | **3.3** | **43** | **3.4** | **43** | **3.5** | **43** | **3.6** |
| | **13%** | **850** | **43** | **3.0** | **43** | **3.1** | **43** | **3.2** | **43** | **3.3** | **43** | **3.4** |
| | **derate** | **875** | **43** | **2.8** | **43** | **2.9** | **43** | **3.0** | **43** | **3.1** | **43** | **3.2** |

* Orifice numbers 43 shown in **BOLD** are factory installed.

Percents of derate are based on midpoints of U.S. altitude ranges.

**⚠ CAUTION**

→ **FIRE HAZARD**

Failure to follow this caution may result in reduced furnace life, property damage, personal injury, and death.

DO NOT bottom-out gas valve regulator adjusting screw. This can result in unregulated manifold pressure and result in excess overfire and heat exchanger failures.

**NOTE:** If orifice hole appears damaged or it is suspected to have been redrilled, check orifice hole with a numbered drill bit of correct size. Never redrill an orifice. A burr-free and squarely aligned orifice hole is essential for proper flame characteristics.

**⚠ CAUTION**

**UNIT DAMAGE HAZARD**

Failure to follow this caution may result in component damage due to flame impingement of burners and heat exchangers.

DO NOT redrill orifices. Improper drilling (burrs, out-of-round holes, etc.) can cause excessive burner noise and misdirection of burner flames. (See Fig. 58.)

e. Replace gas valve regulator adjustment screw seal cap.

f. Replace burner enclosure front and verify adjusted gas input rate using method outlined in item 3.

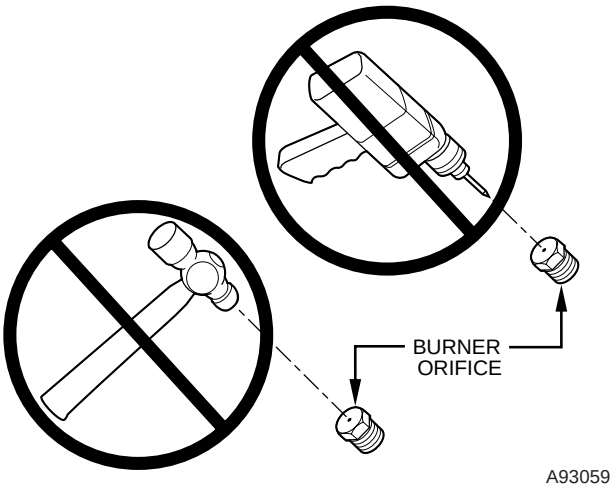


**Fig. 58—Orifice Holes**

g. Look through sight glass in burner enclosure and check burner flame. Burner flame should be clear blue, almost transparent. (See Fig. 59.)

h. Remove jumper from R and W.

3. Verify natural gas input rate by clocking gas meter.

**NOTE:** Be sure all pressure tubing, combustion-air and vent pipes, and burner box cover front are in place when checking input by clocking gas meter.

EXAMPLE:
100,000 Btuh input furnace installed at 4300 ft.

| Furnace Input Rate at Sea Level | X | Derate Multiplier Factor | = | Furnace Input Rate at Installation Altitude |
|---|---|---|---|---|
| 100,000 | X | 0.91 | = | 91,000 |

a. Calculate high-altitude adjustment (if required).
UNITED STATES
At altitudes above 2000 ft, this furnace has been approved for a 2 percent derate for each 1000 ft above sea level. See Table 11 for derate multiplier factor.
CANADA
At installation altitudes between 2001 to 4500 ft, this furnace must be derated 5 percent by an authorized Gas Conversion Station or Dealer. To determine correct input rate for altitude, see example above and use 0.95 as derate multiplier factor.

**Table 11–Altitude Derate Multipler for U.S.A.**

| ALTITUDE (FT) | PERCENT OF DERATE | DERATE MULTIPLIER FACTOR* |
|---|---|---|
| **0–2000** | 0 | 1.00 |
| **2001–3000** | 4–6 | 0.95 |
| **3001–4000** | 6–8 | 0.93 |
| **4001–5000** | 8–10 | 0.91 |
| **5001–6000** | 10–12 | 0.89 |
| **6001–7000** | 12–14 | 0.87 |
| **7001–8000** | 14–16 | 0.85 |
| **8001–9000** | 16–18 | 0.83 |
| **9001–10,000** | 18–20 | 0.81 |

* Derate multiplier factors are based on midpoint altitude for altitude range.

b. Reinstall burner box cover.

c. Gas valve regulator seal cap MUST be on.

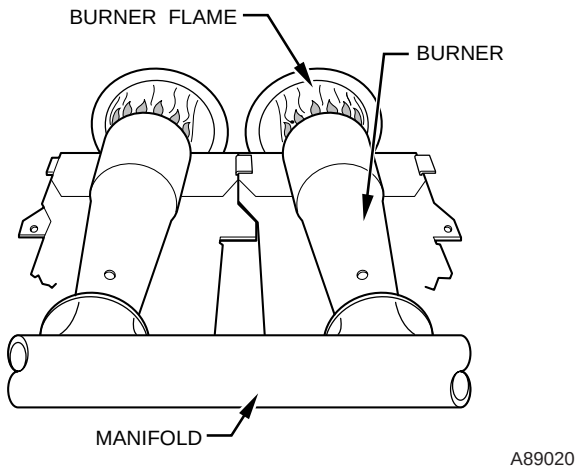


**Fig. 59—Burner Flame**

d. Turn off all other gas applications and pilots.

e. Start furnace and let operate for 3 minutes.

f. Measure time (in sec) for gas meter to dial to complete 1 revolution.

g. Refer to Table 12 for cu ft of gas per hr.

h. Multiply gas rate (cu ft/hr) X heating value (Btu/cu ft) using natural gas heating value from local gas utility/supplier.

EXAMPLE: (0-2000 ft altitude)
Furnace input from rating plate is 100,000 Btuh.
Btu heating input = Btu/cu ft X cu ft/hr
Heating value of gas = 975 Btu/cu ft
Time for 1 revolution of 2-cu ft dial = 70 sec
Gas rate = 103 cu ft/hr (from Table 12)
Btu heating input = 103 X 975 = 100,425 Btuh.
In this example, the orifice size and manifold pressure adjustment is within ±2 percent of the furnace input rate.

SET TEMPERATURE RISE

**⚠ CAUTION**

→ **UNIT DAMAGE HAZARD**
Failure to follow this caution may result in overheating the heat exchangers or condensing flue gases in heat exchanger areas not designed for condensate.
Temperature rise must be within limits specified on furnace rating plate. Recommended operation is at midpoint of rise range or slightly above.

Determine and adjust air temperature rise as follows:

1. Place thermometers in return and supply ducts as close to furnace as possible. Be sure thermometers do not see heat exchangers so that radiant heat does not affect readings. This practice is particularly important with straight-run ducts.
2. When thermometer readings stabilize, subtract return-air temperature from supply-air temperature to determine air temperature rise.
3. Adjust temperature rise by adjusting blower speed. Increase blower speed to reduce temperature rise. Decrease blower speed to increase temperature rise.

## Table 12—Gas Rate (cu ft/hr)

| SECONDS FOR 1 REVOLUTION | SIZE OF TEST DIAL | | | SECONDS FOR 1 REVOLUTION | SIZE OF TEST DIAL | | |
|---|---|---|---|---|---|---|---|
| | 1 Cu Ft | 2 Cu Ft | 5 Cu Ft | | 1 Cu Ft | 2 Cu Ft | 5 Cu Ft |
| **10** | 360 | 720 | 1800 | **50** | 72 | 144 | 360 |
| **11** | 327 | 655 | 1636 | **51** | 71 | 141 | 355 |
| **12** | 300 | 600 | 1500 | **52** | 69 | 138 | 346 |
| **13** | 277 | 555 | 1385 | **53** | 68 | 136 | 340 |
| **14** | 257 | 514 | 1286 | **54** | 67 | 133 | 333 |
| **15** | 240 | 480 | 1200 | **55** | 65 | 131 | 327 |
| **16** | 225 | 450 | 1125 | **56** | 64 | 129 | 321 |
| **17** | 212 | 424 | 1059 | **57** | 63 | 126 | 316 |
| **18** | 200 | 400 | 1000 | **58** | 62 | 124 | 310 |
| **19** | 189 | 379 | 947 | **59** | 61 | 122 | 305 |
| **20** | 180 | 360 | 900 | **60** | 60 | 120 | 300 |
| **21** | 171 | 343 | 857 | **62** | 58 | 116 | 290 |
| **22** | 164 | 327 | 818 | **64** | 56 | 112 | 281 |
| **23** | 157 | 313 | 783 | **66** | 54 | 109 | 273 |
| **24** | 150 | 300 | 750 | **68** | 53 | 106 | 265 |
| **25** | 144 | 288 | 720 | **70** | 51 | 103 | 257 |
| **26** | 138 | 277 | 692 | **72** | 50 | 100 | 250 |
| **27** | 133 | 267 | 667 | **74** | 48 | 97 | 243 |
| **28** | 129 | 257 | 643 | **76** | 47 | 95 | 237 |
| **29** | 124 | 248 | 621 | **78** | 46 | 92 | 231 |
| **30** | 120 | 240 | 600 | **80** | 45 | 90 | 225 |
| **31** | 116 | 232 | 581 | **82** | 44 | 88 | 220 |
| **32** | 113 | 225 | 563 | **84** | 43 | 86 | 214 |
| **33** | 109 | 218 | 545 | **86** | 42 | 84 | 209 |
| **34** | 106 | 212 | 529 | **88** | 41 | 82 | 205 |
| **35** | 103 | 206 | 514 | **90** | 40 | 80 | 200 |
| **36** | 100 | 200 | 500 | **92** | 39 | 78 | 196 |
| **37** | 97 | 195 | 486 | **94** | 38 | 76 | 192 |
| **38** | 95 | 189 | 474 | **96** | 38 | 75 | 188 |
| **39** | 92 | 185 | 462 | **98** | 37 | 74 | 184 |
| **40** | 90 | 180 | 450 | **100** | 36 | 72 | 180 |
| **41** | 88 | 176 | 439 | **102** | 35 | 71 | 178 |
| **42** | 86 | 172 | 429 | **104** | 35 | 69 | 173 |
| **43** | 84 | 167 | 419 | **106** | 34 | 68 | 170 |
| **44** | 82 | 164 | 409 | **108** | 33 | 67 | 167 |
| **45** | 80 | 160 | 400 | **110** | 33 | 65 | 164 |
| **46** | 78 | 157 | 391 | **112** | 32 | 64 | 161 |
| **47** | 76 | 153 | 383 | **116** | 31 | 62 | 155 |
| **48** | 75 | 150 | 375 | **120** | 30 | 60 | 150 |
| **49** | 73 | 147 | 367 | **124** | 29 | 58 | 145 |

**⚠ WARNING**

**ELECTRICAL SHOCK HAZARD**

Failure to follow this warning could result in personal injury or death.

Disconnect 115-v electrical power before changing speed tap.

4. To change blower motor speed selections for heating mode, remove blower motor lead from control HEAT terminal. (See Fig. 31.) Select desired blower motor speed lead from 1 of the other motor leads and relocate it to HEAT terminal. See Table 13 for lead color identification. Reconnect original lead on SPARE terminal.

   Follow this same procedure for proper selection of COOL speed selection.

ADJUST BLOWER OFF DELAY (HEAT MODE)

The blower off delay has 4 adjustable settings from 90 sec to 180 sec. (See Table 14.) The blower off delay jumpers are located on the furnace control (See Fig. 31). To change the blower off delay setting, move the jumper from one set of pins on the control to the pins used for the desired blower off delay. Factory blower off delay setting is 120 sec.

## Table 13—Speed Selector

| COLOR | SPEED | FACTORY-SHIPPED CONNECTION |
|---|---|---|
| **Black** | High | Cool |
| **Yellow (When Present)** | Medium High | Spare |
| **Blue** | Medium Low | Heat |
| **Red** | Low | Fan |
| **White** | Common | COM |

## Table 14—Blower Off Delay Jumper Positions

| PINS | 1 AND 2 | 2 AND 3 | 3 AND 4 | 4 AND 5 |
|---|---|---|---|---|
| **Time (in sec)** | 90 | 120 | 150 | 180 |

SET THERMOSTAT HEAT ANTICIPATOR

When using a nonelectronic thermostat, the thermostat heat anticipator must be set to match the amp draw of the electrical components in R-W circuit. Accurate amp draw readings can be obtained at thermostat subbase terminals R and W. Fig. 60 illustrates the easy method of obtaining actual amp draw. The amp reading should be taken after blower motor has started and furnace is heating. Connect ammeter wires as shown in Fig. 60. The thermostat anticipator should NOT be in the curcuit while measuring current. If thermostat has no subbase, the thermostat must be disconnected from R and W wires during current measurement. See thermostat manufacturer's instructions for adjusting heat anticipator and for varying heating cycle length.

For an electronic thermostat, set cycle rate for 3 cycles per hour.

### Step 6—Check Safety Controls

This section covers the safety controls that must be checked before the installation is complete. The flame sensor, gas valve, and pressure switch were all checked in the Start-up procedure section as part of normal operation.

CHECK PRIMARY LIMIT CONTROL

This control shuts off gas control system and energizes air-circulating blower motor if furnace overheats. Recommended method of checking this limit control is to gradually block off return air after furnace has been operating for a period of at least 5 minutes. As soon as limit control has shut off burners, return-air opening should be unblocked to permit normal air circulation. By using this method to check limit control, it can be established that limit is functioning properly and operates if there is a restricted return-air duct or motor failure. If limit control does not function during this test, cause must be determined and corrected.

CHECK PRESSURE SWITCH

This control proves operation of draft inducer. Check switch operation as follows:

1. Turn off 115-v power to furnace.
2. Remove outer furnace door and disconnect inducer motor from wire harness.
3. Turn on 115-v power to furnace.
4. Set thermostat to ″call for heat″ and wait 1 minute. When pressure switch is functioning properly, hot surface igniter should NOT glow, and control status code LED flashes a Status Code 31. If hot surface igniter glows when inducer

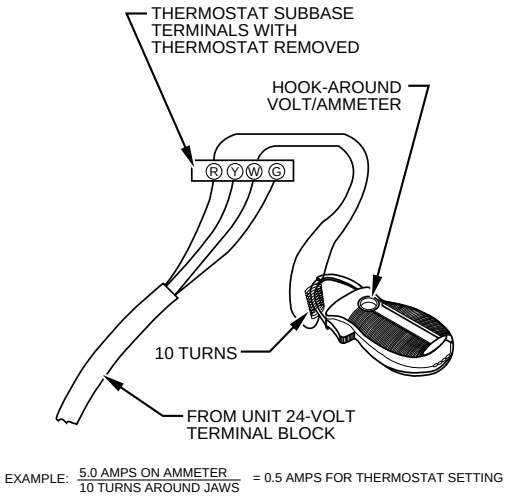


**Fig. 60—Amp Draw Check with Ammeter**

motor is disconnected, shut furnace down immediately. Determine reason pressure switch did not function properly and correct condition.

5. Turn off 115-v power to furnace.
6. Reconnect inducer motor leads, reinstall main furnace door, and turn on 115-v power supply.

### Step 7—Checklist

1. Put away tools and instruments. Clean up debris.
2. Verify flame-rollout manual reset switch has continuity.
3. Verify that blower and main outer access doors are properly installed.
4. Cycle test furnace with room thermostat.
5. Check operation of accessories per manufacturer's instructions.
6. Review User's Guide with owner.
7. Leave literature packet near furnace.

## CHECKLIST—INSTALLATION

**LOAD CALCULATION**

_____ Heating Load (Btuh)

_____ Cooling Load (Btuh)

_____ Furnace Model Selection

**COMBUSTION AIR AND VENT PIPING**

**Termination Location**

_____ Roof or Sidewall

_____ Termination Kit — 2 Pipe or Concentric

_____ Combustion-Air Pipe Length

_____ Combustion-Air Pipe Elbow Quantity

_____ Vent Pipe Length

_____ Vent Pipe Elbow Quantity

_____ Pipe Diameter Determined from Sizing Table

_____ Pipe Sloped To Furnace

**Pipe Insulation**

_____ Over Ceilings

_____ Low-Ambient Exposed Pipes

**Condensate Drain**

_____ Unit Level or Pitched Forward

_____ Internal Tubing Connections Free of Kinks and Traps

_____ External Drain Connection Leak Tight and Sloped

_____ Condensate Trap Primed before Start-Up

_____ Heat Tape Installed if Required

**CHECKLIST—START-UP**

_____ Gas Input Rate
(Set Within 2 percent of Rating Plate)

_____ Temperature Rise Adjusted

**Thermostat Anticipator**

_____ Anticipator Setting Adjusted or

_____ Cycle Rate (3 Cycles per Hr) Selected

**Safety Controls Check Operation**

_____ Primary Limit

_____ Pressure Switch

Copyright 2004 CARRIER Corp. • 7310 W. Morris St. • Indianapolis, IN 46231


**Manufacturer reserves the right to discontinue, or change at any time, specifications or designs without notice and without incurring obligations.**