# 59MN7A
# Infinity® Modulating 4–Way Multipoise Condensing Gas Furnace Series 100

Carrier
turn to the experts

# Product Data

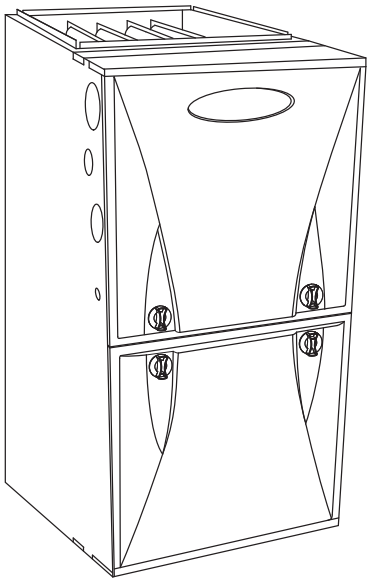

A11263

The 59MN7A Multipoise Variable-Capacity Condensing Gas Furnace features the modulating Infinity® System. The innovative modulating gas valve is at the heart of this furnace's quiet operation, along with the variable-speed ECM blower motor and variable-speed inducer motor. This furnace also provides 3.5 times tighter temperature control than single stage furnaces. With an Annual Fuel Utilization Efficiency (AFUE) up to 97.4%, this Infinity gas furnace provides exceptional savings over standard furnaces as well. This Infinity Gas Furnace also features 4-way multipoise installation flexibility. The 59MN7A can be vented as a direct vent/two-pipe furnace or as an optional ventilated combustion air application. A Carrier Infinity® Control and an Infinity Air Conditioner or Heat Pump can be used to form a complete Infinity System. All units meet California Air Quality Management District emission requirements. All sizes are design certified in Canada.

## STANDARD FEATURES

- Our quietest furnace. Compare for yourself at HVACpartners.com
- Supports single- and multiple-zone Infinity systems
- Ideal height 35" (889 mm) cabinet: short enough for taller coils,but still allows enough room for service
- Infinity Features—match with the Infinity Control for Infinity System benefits
- Integral part of the Ideal Humidity System® Technology
- Silicon Nitride Power Heat™ Hot Surface Igniter
- SmartEvap™ technology helps control humidity levels in the home when used with a compatible humidity control system
- ComfortFan™ technology allows control of continuous fan speed from a compatible thermostat
- External Media Filter Cabinet included
- 4-way multipoise design for upflow, downflow or horizontal installations, with unique vent elbow and optional through-the-cabinet downflow venting capability
- Variable-Speed blower and inducer motors, modulating gas valve
- Self-diagnostics and extended diagnostic data through the Advanced Product Monitor (APM) accessory or Infinity User Interface
- Adjustable blower speed for cooling, continuous fan, and dehumidification
- Aluminized-steel primary heat exchanger
- Stainless-steel condensing secondary heat exchanger
- Propane convertible (See Accessory list).
- Factory-configured ready for upflow applications
- Fully-insulated casing including blower section
- Convenient Electronic Air Cleaner and Humidifier connections
- Direct-vent/sealed combustion or ventilated combustion air venting
- Installation flexibility: sidewall or vertical vent
- Residential installations may be eligible for consumer financing through the Retail Credit Program

## LIMITED WARRANTY*

- 10 year parts and lifetime heat exchanger limited warranty to the original purchaser upon timely registration.
- Limited warranty period is five years for parts and twenty years for the heat exchanger if not registered within 90 days of installation.†

* For owner occupied, residential applications.

†Jurisdictions where warranty benefits cannot be conditioned on registration will receive registered limited warranty benefits.

INFINITY SERIES IdealHumidity greenspeed INTELLIGENCE ENERGY STAR DESIGN CERTIFIED CERTIFIED

AHRI CERTIFIED www.ahridirectory.org

Use of the AHRI Certified TM Mark indicates a manufacturer's participation in the program. For verification of certification for individual products, go to www.ahridirectory.org.

Certified System ISO 9001 DMI-SAI Global

Always Ask For FACTORY AUTHORIZED PARTS

# SPECIFICATIONS

| Heating Capacity and Efficiency | | | 060-14 | 080-14 | 100-20 | 120-22 |
|---|---|---|---|---|---|---|
| Input | Maximum Heat | (BTUH) | 60,000 | 80,000 | 100,000 | 120,000 |
| | Intermediate Heat | (BTUH) | 39,000 | 52,000 | 65,000 | 78,000 |
| | Minimum Heat | (BTUH) | 24,000 | 32,000 | 40,000 | 48,000 |
| Output | Maximum Heat | (BTUH) | 59,000 | 78,000 | 97,000 | 117,000 |
| | Intermediate Heat | (BTUH) | 38,000 | 51,000 | 63,000 | 76,000 |
| | Minimum Heat | (BTUH) | 24,000 | 31,000 | 39,000 | 47,000 |
| Efficiency | AFUE % (ICS) | | 97.4 | 97.4 | 97.1 | 97.2 |
| Certified Temperature Rise Range °F (°C) | | Maximum Heat | 35 - 65 (19-36) | 40 - 70 (21-38) | 45 - 75 (25-41) | 45 - 75 (25-41) |
| | | Intermediate Heat | 50 - 80 (27-44) | 50 - 80 (27-44) | 50 - 80 (27-44) | 50 - 80 (27-44) |
| | | Minimum Heat | 35 -65 (19-36) | 35 - 65 (19-36) | 35 - 65 (19-36) | 35 - 65 (19-36) |
| **Airflow Capacity and Blower Data** | | | **060-14** | **080-14** | **100-20** | **120-22** |
| Certified External Static Pressure (in. w.c.) | | Heating | 0.12 | 0.15 | 0.20 | 0.20 |
| | | Cooling | 0.5 | 0.5 | 0.5 | 0.5 |
| Airflow Delivery @ Rated ESP (CFM) | | Maximum Heat | 1075 | 1510 | 1515 | 1815 |
| | | Intermediate Heat | 530 | 750 | 905 | 1100 |
| | | Minimum Heat | 415 | 620 | 725 | 900 |
| | | Cooling | 1335 | 1375 | 2030 | 2185 |
| Cooling Capacity (tons) @ 400, 350 CFM/ton | | 400 CFM/ton | 3 | 3.5 | 5 | 5.5 |
| | | 350 CFM/ton | 3.5 | 4 | 5.5 | 6 |
| Direct-Drive Motor Type | | | Electronically Commutated Motor (ECM) | | | |
| Direct-Drive Motor HP | | | 1/2 | 1/2 | 1 | 1 |
| Motor Full Load Amps | | | 7.7 | 7.7 | 12.8 | 12.8 |
| RPM Range | | | 300 - 1300 | | | |
| Speed Selections | | | Variable (Communicating) | | | |
| Blower Wheel Dia. X Width | | in. | 11 x 8 | 11 x 8 | 11 x 10 | 11 x 11 |
| Air Filtration System | | | Factory Supplied Media Cabinet<br>Field Supplied Filter | | | |
| Filter Used for Certified Watt Data | | | KGAWF1306UFR | KGAWF1306UFR | KGAWF1406UFR | KGAWF1506UFR |
| **Electrical Data** | | | **060-14** | **080-14** | **100-20** | **120-22** |
| Input Voltage | | Volts-Hertz-Phase | 115-60-1 | | | |
| Operating Voltage Range | | Min-Max | 104-127 | | | |
| Maximum Input Amps | | Amps | 9.7 | 9.7 | 14.8 | 14.8 |
| Unit Ampacity | | Amps | 12.7 | 12.7 | 19.1 | 19.1 |
| Minimum Wire Size | | AWG | 14 | 14 | 12 | 12 |
| Maximum Wire Length @ Minimum Wire Size | | Feet | 29 | 29 | 30 | 30 |
| | | (M) | (8.8) | (8.8) | (9.1) | (9.1) |
| Maximum Fuse/Ckt Bkr (Time-Delay Type Recommended) | | Amps | 15 | 15 | 20 | 20 |
| Transformer Capacity (24vac output) | | | 40 VA | | | |
| External Control Power Available | | Heating | 27.9 VA | | | |
| | | Cooling | 27.9 VA | | | |
| **Controls** | | | **060-14** | **080-14** | **100-20** | **120-22** |
| Gas Connection Size | | | 1/2" - NPT | | | |
| Burners (Monoport) | | | 3 | 4 | 5 | 6 |
| Gas Valve (Redundant) | | Manufacturer | White Rogers™ | | | |
| | | Minimum Inlet Gas pressure (in. W.C.) | 4.5 | | | |
| | | Maximum Inlet Gas pressure (in. W.C.) | 13.6 | | | |
| Gas Conversion Kit - Natural to Propane | | | KGANP5201VSP | | | |
| Gas Conversion Kit - Propane to Natural | | | KGAPN4401VSP | | | |
| Manufactured (Mobile) Home Kit | | | *not approved for MH use* | | | |
| Ignition Device | | | Silicon Nitride | | | |
| Limit Control | | | 180 | 170 | 160 | 160 |
| Heating Blower Control (Heating Off-Delay) | | | Adjustable: 90, 120, 150, 180 seconds | | | |
| Cooling Blower Control (Time Delay Relay) | | | 90 seconds | | | |
| Communication System | | | Infinity; Infinity Zoning | | | |
| Thermostat Connections | | | W2, Y1, DHUM, G, COM 24V, W/W1, Y/Y2, R | | | |
| Accessory Connections | | | EAC (115vac); HUM (24vac); 1-stg AC (via Y/Y2) | | | |

# MODEL NUMBER NOMENCLATURE

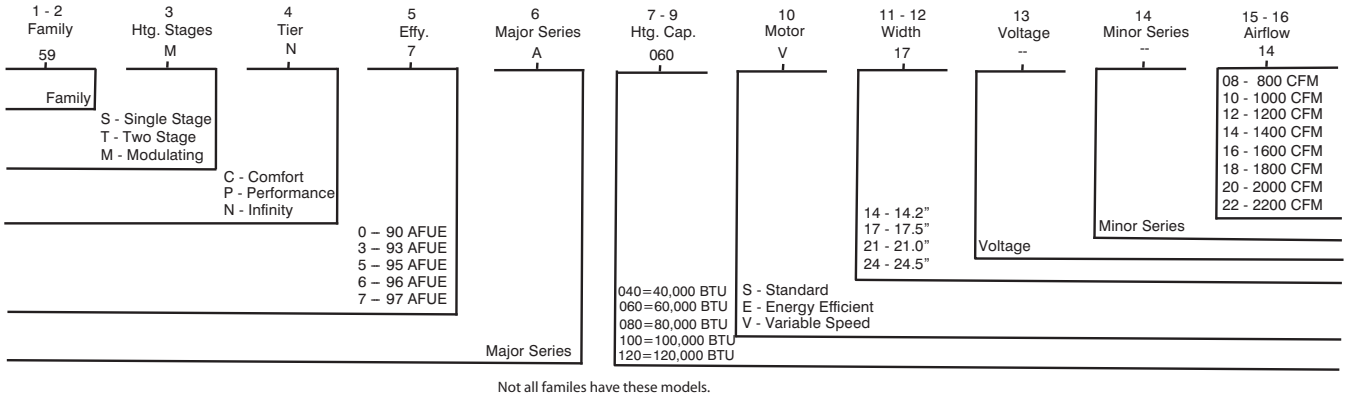


Not all familes have these models.

A11159

# FURNACE COMPONENTS

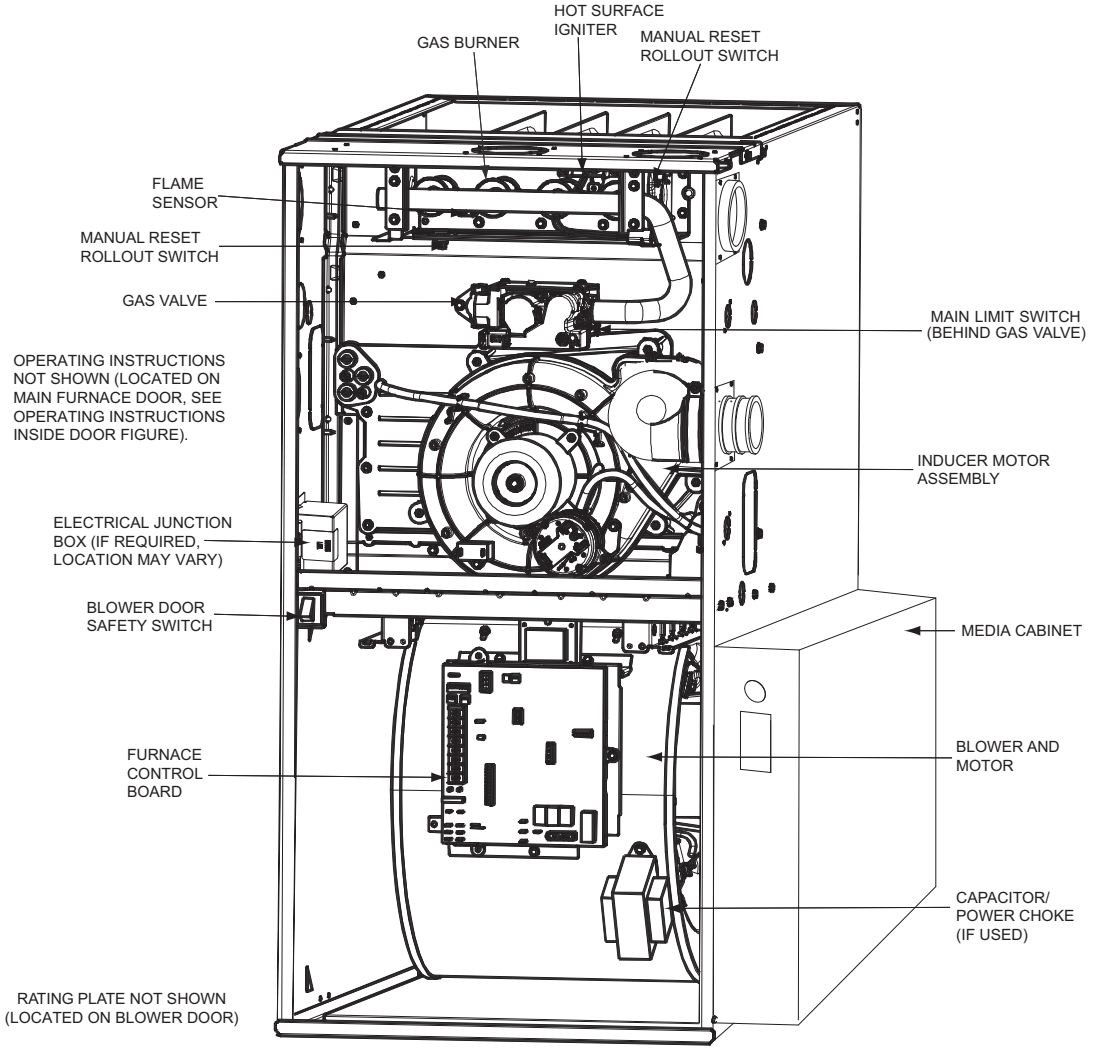


REPRESENTATIVE DRAWING ONLY, SOME MODELS MAY VARY IN APPEARANCE.

A11408

# ACCESSORIES

| DESCRIPTION | PART NUMBER | 060-14 | 080-14 | 100-20 | 120-22 |
|---|---|---|---|---|---|
| **Venting, Drainage and Installation** | | | | | |
| Vent Kit - Through the Cabinet | KGADC0101BVC | X | X | X | X |
| Vent Terminal - Concentric - 2” (51 mm) | KGAVT0701CVT | X | X | X | N/A |
| Vent Terminal - Concentric - 3” (76 mm) | KGAVT0801CVT | X | X | X | X |
| Vent Terminal Bracket - 2” (51 mm) | KGAVT0101BRA | X | X | X | N/A |
| Vent Terminal Bracket - 3” (76 mm) | KGAVT0201BRA | X | X | X | X |
| CPVC to PVC Drain Adapters - 1/2” CPVC to 3/4” PVC | KGAAD0110PVC | X | X | X | X |
| Horizontal Trap Grommet - Direct Vent | KGACK0101HCK | X | X | X | X |
| Freeze Protect Kit - Heat Patch for Drain Trap | KGAHT0201CFP | X | X | X | X |
| Freeze Protect Kit - Heat Tape | KGAHT0101CFP | X | X | X | X |
| Furnace Base Kit for Combustible Floors | KGASB0201ALL | X | X | X | X |
| **Gas Conversion** | | | | | |
| Gas Cnv Kit - Nat to LP; Var-spd Products | KGANP5201VSP | X | X | X | X |
| Gas Cnv Kit - LP to Nat; Var-spd Products | KGAPN4401VSP | X | X | X | X |
| Gas Orifice Kit - #42 (Nat Gas) | KGAHA0150N42 | X | X | X | X |
| Gas Orifice Kit - #43 (Nat Gas) | KGAHA0250N43 | X | X | X | X |
| Gas Orifice Kit - #44 (Nat Gas) | KGAHA0350N44 | X | X | X | X |
| Gas Orifice Kit - #45 (Nat Gas) | KGAHA0450N45 | X | X | X | X |
| Gas Orifice Kit - #46 (Nat Gas) | KGAHA0550N46 | X | X | X | X |
| Gas Orifice Kit - #47 (Nat Gas) | KGAHA1550N47 | X | X | X | X |
| Gas Orifice Kit - #48 (Nat Gas) | KGAHA1650N48 | X | X | X | X |
| Gas Orifice Kit - #54 (LP) | KGAHA0650P54 | X | X | X | X |
| Gas Orifice Kit - #55 (LP) | KGAHA0750P55 | X | X | X | X |
| Gas Orifice Kit - #56 (LP) | KGAHA0850P56 | X | X | X | X |
| Gas Orifice Kit - 1.25mm (LP) | KGAHA5750125 | X | X | X | X |
| Gas Orifice Kit - 1.30mm (LP) | KGAHA5750130 | X | X | X | X |
| **Indoor Air Quality** | | | | | |
| Carrier Infinity Air Purifier - 16x25 (406x635 mm) | GAPAAXCC1625-A08 | X | X | X | X |
| Carrier Infinity Air Purifier - 20x25 (508x635 mm) | GAPAAXCC2025-A08 | X | X | X | X |
| Carrier Infinity Air Purifier Repl. Filter- 16x25 (406x635 mm) | GAPACCCAR1625-A05 | X | X | X | X |
| Carrier Infinity Air Purifier Repl. Filter- 20x25 (508x635 mm) | GAPACCCAR2025-A05 | X | X | X | X |
| EZ Flex Cabinet 16” (406 mm) | EZXCABCC1016-A20 | X | X | X | X |
| EZ Flex Cabinet 20” (508 mm) | EZXCABCC1020-A20 | X | X | X | X |
| Cartridge Media Filter - 16” (406 mm) | FILXXCAR0016 | X | X | X | X |
| Cartridge Media Filter - 20” (508 mm) | FILXXCAR0020 | X | X | X | X |
| Cartridge Media Filter - 24” (610 mm) | FILXXCAR0024 | X | X | X | X |
| EZ-Flex Filter - 16” (406 mm) | EXPXXFIL0016 | X | X | X | X |
| EZ-Flex Filter - 20” (508 mm) | EXPXXFIL0020 | X | X | X | X |
| EZ-Flex Filter - 24” (610 mm) | EXPXXFIL0024 | X | X | X | X |
| EZ-Flex Filter with End Caps - 16” (406 mm) | EXPXXUNV0016 | X | X | X | X |
| EZ-Flex Filter with End Caps - 20” (508 mm) | EXPXXUNV0020 | X | X | X | X |
| EZ-Flex Filter with End Caps - 24” (610 mm) | EXPXXUNV0024 | X | X | X | X |
| Filter Pack (6 pack) - Washable - 16x25x1 (406x635x25 mm) | KGAWF1306UFR | X | X | X | X |
| Filter Pack (6 pack) - Washable - 24x25x1 (610x635x25 mm) | KGAWF1506UFR | X | X | X | X |
| **Controls** | | | | | |
| Infinity™ Control User Interface | SYSTXCCUID01-V | X | X | X | X |
| Infinity™ Control Zoning User Interface | SYSTXCCUIZ01-V | X | X | X | X |
| **Service Tools** | | | | | |
| Advanced Product Monitor - APM (CBP, Only) | KGASD0301APM | X | X | X | X |
| ECM Motor Simulator Kit | KGASD0301FMS | X | X | X | X |

X = Used with the model furnace
N/A = Not used with the model furnace

# AIR DELIVERY - CFM (BOTTOM RETURN WITH FILTER)

**(SW1-5 and SW4-3 set to OFF, except as indicated. See Notes 1 and 2.)**

| INPUT BTUH | Cooling Switch Settings | | | External Static Pressure (E.S.P.) | | | | | | | | | |
|---|---|---|---|---|---|---|---|---|---|---|---|---|---|
| | SW2-3 | SW2-2 | SW2-1 | 0.1 | 0.2 | 0.3 | 0.4 | 0.5 | 0.6 | 0.7 | 0.8 | 0.9 | 1.0 |
| 60000 | OFF | OFF | OFF | 1060 | 1070 | 1080 | 1080 | 1075 | 1065 | 1050 | 1035 | 1025 | 1010 |
| | OFF | OFF | ON | 545 | 530 | 520 | 525 | 510 | | | | | |
| | OFF | ON | OFF | 710 | 710 | 710 | 695 | 690 | | | | | |
| | OFF | ON | ON | 875 | 880 | 890 | 895 | 895 | 890 | 885 | 880 | 870 | 855 |
| | ON | OFF | OFF | 1060 | 1070 | 1080 | 1080 | 1075 | 1065 | 1050 | 1035 | 1025 | 1010 |
| | ON | OFF | ON | 1235 | 1240 | 1250 | 1255 | 1255 | 1250 | 1230 | 1190 | 1155 | 1115 |
| | ON | ON | OFF | 1235 | 1240 | 1250 | 1255 | 1255 | 1250 | 1230 | 1190 | 1155 | 1115 |
| | ON | ON | ON | 1235 | 1240 | 1250 | 1255 | 1255 | 1250 | 1230 | 1190 | 1155 | 1115 |
| | Maximum Cooling Airflow[2] | | | 1425 | 1425 | 1405 | 1370 | 1335 | 1300 | 1260 | 1225 | 1190 | 1155 |
| | Maximum Heat Airflow[3] | | | 1075 | 1085 | 1095 | 1095 | 1090 | 1080 | 1065 | 1050 | 1035 | 1020 |
| | Intermediate Heat Airflow[3] | | | 535 | 515 | 505 | 515 | 495 | | | | | |
| | Minimum Heat Airflow[3] | | | 420 | 410 | 415 | 400 | 380 | | | | | |

| INPUT BTUH | Cooling Switch Settings | | | External Static Pressure (E.S.P.) | | | | | | | | | |
|---|---|---|---|---|---|---|---|---|---|---|---|---|---|
| | SW2-3 | SW2-2 | SW2-1 | 0.1 | 0.2 | 0.3 | 0.4 | 0.5 | 0.6 | 0.7 | 0.8 | 0.9 | 1.0 |
| 80000 | OFF | OFF | OFF | 1055 | 1065 | 1080 | 1075 | 1065 | 1050 | 1045 | 1035 | 1025 | 1005 |
| | OFF | OFF | ON | 520 | 505 | 505 | 495 | 490 | | | | | |
| | OFF | ON | OFF | 665 | 685 | 680 | 660 | 665 | | | | | |
| | OFF | ON | ON | 885 | 895 | 905 | 900 | 900 | 895 | 885 | 875 | 860 | 845 |
| | ON | OFF | OFF | 1055 | 1065 | 1080 | 1075 | 1065 | 1050 | 1045 | 1035 | 1025 | 1005 |
| | ON | OFF | ON | 1245 | 1245 | 1255 | 1255 | 1260 | 1255 | 1250 | 1235 | 1220 | 1185 |
| | ON | ON | OFF | 1245 | 1245 | 1255 | 1255 | 1260 | 1255 | 1250 | 1235 | 1220 | 1185 |
| | ON | ON | ON | 1245 | 1245 | 1255 | 1255 | 1260 | 1255 | 1250 | 1235 | 1220 | 1185 |
| | Maximum Cooling Airflow[2] | | | 1520 | 1485 | 1450 | 1415 | 1375 | 1335 | 1300 | 1265 | 1225 | 1190 |
| | Maximum Heat Airflow[3] | | | 1520 | 1485 | 1450 | 1415 | 1375 | 1335 | 1300 | 1265 | 1225 | 1190 |
| | Intermediate Heat Airflow[3] | | | 755 | 745 | 755 | 755 | 765 | | | | | |
| | Minimum Heat Airflow[3] | | | 620 | 625 | 630 | 620 | 610 | | | | | |

# AIR DELIVERY - CFM (BOTTOM RETURN WITH FILTER) (CONTINUED)

**(SW1-5 and SW4-3 set to OFF, except as indicated. See Notes 1 and 2.)**

| INPUT BTUH | Cooling Switch Settings | | | External Static Pressure (E.S.P.) | | | | | | | | | |
|---|---|---|---|---|---|---|---|---|---|---|---|---|---|
| | SW2-3 | SW2-2 | SW2-1 | 0.1 | 0.2 | 0.3 | 0.4 | 0.5 | 0.6 | 0.7 | 0.8 | 0.9 | 1.0 |
| 100000 | OFF | OFF | OFF | 1815 | 1810 | 1805 | 1800 | 1785 | 1765 | 1745 | 1720 | 1710 | 1685 |
| | OFF | OFF | ON | 765 | 775 | 755 | 730 | 710 | | | | | |
| | OFF | ON | OFF | 930 | 940 | 935 | 930 | 935 | | | | | |
| | OFF | ON | ON | 1095 | 1120 | 1120 | 1105 | 1095 | 1100 | 1085 | 1075 | 1055 | 1050 |
| | ON | OFF | OFF | 1245 | 1270 | 1275 | 1280 | 1290 | 1280 | 1285 | 1270 | 1260 | 1245 |
| | ON | OFF | ON | 1440 | 1445 | 1455 | 1445 | 1450 | 1440 | 1440 | 1425 | 1415 | 1405 |
| | ON | ON | OFF | 1815 | 1810 | 1805 | 1800 | 1785 | 1765 | 1745 | 1720 | 1710 | 1685 |
| | ON | ON | ON | 1815 | 1810 | 1805 | 1800 | 1785 | 1765 | 1745 | 1720 | 1710 | 1685 |
| | Maximum Cooling Airflow[2] | | | 2055 | 2055 | 2050 | 2045 | 2030 | 2015 | 1995 | 1940 | 1870 | 1805 |
| | Maximum Heat Airflow[3] | | | 1495 | 1515 | 1515 | 1520 | 1525 | 1520 | 1515 | 1505 | 1490 | 1480 |
| | Intermediate Heat Airflow[3] | | | 900 | 905 | 900 | 900 | 890 | | | | | |
| | Minimum Heat Airflow[3] | | | 725 | 725 | 720 | 690 | 670 | | | | | |

| INPUT BTUH | Cooling Switch Settings | | | External Static Pressure (E.S.P.) | | | | | | | | | |
|---|---|---|---|---|---|---|---|---|---|---|---|---|---|
| | SW2-3 | SW2-2 | SW2-1 | 0.1 | 0.2 | 0.3 | 0.4 | 0.5 | 0.6 | 0.7 | 0.8 | 0.9 | 1.0 |
| 120000[6] | OFF | OFF | OFF | 1850 | 1855 | 1860 | 1855 | 1850 | 1830 | 1805 | 1775 | 1750 | 1730 |
| | OFF | OFF | ON | 765 | 745 | 740 | 705 | 680 | | | | | |
| | OFF | ON | OFF | 930 | 925 | 915 | 900 | 885 | | | | | |
| | OFF | ON | ON | 1095 | 1100 | 1110 | 1105 | 1085 | | | | | |
| | ON | OFF | OFF | 1265 | 1255 | 1265 | 1280 | 1275 | 1285 | 1270 | 1260 | 1250 | 1230 |
| | ON | OFF | ON | 1465 | 1455 | 1470 | 1465 | 1465 | 1470 | 1455 | 1450 | 1435 | 1415 |
| | ON | ON | OFF | 1850 | 1855 | 1860 | 1855 | 1850 | 1830 | 1805 | 1775 | 1750 | 1730 |
| | ON | ON | ON | 2200 | 2200 | 2200 | 2190 | 2185 | 2170 | 2145 | 2085 | 1990 | 1890 |
| | Maximum Cooling Airflow[2] | | | 2200 | 2200 | 2200 | 2190 | 2185 | 2170 | 2145 | 2085 | 1990 | 1890 |
| | Maximum Heat Airflow[3] | | | 1815 | 1820 | 1825 | 1820 | 1815 | 1795 | 1775 | 1745 | 1720 | 1700 |
| | Intermediate Heat Airflow[3] | | | 1095 | 1100 | 1110 | 1105 | 1085 | | | | | |
| | Minimum Heat Airflow[3] | | | 905 | 900 | 890 | 875 | 855 | | | | | |

1. Nominal 350 CFM/ton cooling airflow is delivered with SW1-5 and SW4-2 set to OFF.
   Set SW1-5 to ON for nominal 400 CFM/ton (+15% airflow).
   Set SW4-3 to ON for nominal 325 CFM/ton (-7% airflow).
   Set both SW1-5 and SW4-3 to ON for nominal 370 CFM/ton (+7% airflow).
2. Maximum cooling airflow is achieved when switches SW3-1, SW3-2, SW3-3 and SW1-5 are set to ON, and SW4-3 is set to OFF.
3. All heating CFM's are when minimum/intermediate heat rise adjustment switch (SW1-3) and comfort/efficiency adjustment switch (SW1-4) are both set to OFF.
4. Ductwork must be sized for maximum-heating CFM within the operational range of E.S.P. Operation within the blank areas of the chart is not recommended because maximum-heat operation will be above 1.0 E.S.P.
5. All airflows on 21" (533 mm) casing size furnaces are 5% less on side return only installations.)
6. Side returns for 24.5" (622 mm) casing sizes require two sides, or side and bottom, to allow sufficient airflow at the return of the furnace.

# MAXIMUM EQUIVALENT VENT LENGTH - FT. (M)

***NOTE: Maximum Equivalent Vent Length (MEVL) does NOT include elbows or terminations. Use Table 2 - Deductions from Maximum Equivalent Vent Length to determine allowable vent length for each application.***

**Table 1 – Maximum Equivalent Vent Length - Ft. (M)**
**0 to 4500 Ft. (0 to 1370 M) Altitude**

| Altitude FT (M) | Unit Size BTU/Hr | DIRECT VENT (2-PIPE) AND VENTILATED COMBUSTION AIR ONLY | | | | | | | | | |
|---|---|---|---|---|---|---|---|---|---|---|---|
| | | Vent Pipe Diameter (in.) | | | | | | | | | |
| | | 1-1/2 | | 2 | | 2-1/2 | | 3 | | 4 | |
| 0 to 2000 (0 to 610) | 60,000 | 55 | (16.8) | 135 | (41.1) | 235 | (71.6) | 265 | (80.8) | NA | |
| | 80,000 | 35 | (10.7) | 130 | (39.6) | 175 | (53.3) | 235 | (71.6) | 265 | (80.8) |
| | 100,000 | NA | | 50 | (15.2) | 110 | (33.5) | 235 | (71.6) | 265 | (80.8) |
| | 120,000 | NA | | NA | | 15 | (4.6) | 100 | (30.5) | 250 | (76.2) |
| 2001 to 3000 (610 to 914) | 60,000 | 45 | (13.7) | 127 | (38.7) | 222 | (67.7) | 250 | (76.2) | NA | |
| | 80,000 | 30 | (9.1) | 90 | (27.4) | 165 | (50.3) | 222 | (67.7) | 249 | (75.9) |
| | 100,000 | NA | | 40 | (12.2) | 104 | (31.7) | 223 | (68.0) | 250 | (76.2) |
| | 120,000 | NA | | NA | | 11 | (3.4) | 93 | (28.3) | 237 | (72.2) |
| 3001 to 4000 (914 to 1219) | 60,000 | 40 | (12.2) | 119 | (36.3) | 210 | (64.0) | 235 | (71.6) | NA | |
| | 80,000 | 25 | (7.6) | 85 | (25.9) | 155 | (47.2) | 210 | (64.0) | 232 | (70.7) |
| | 100,000 | NA | | 40 | (12.2) | 98 | (29.9) | 211 | (64.3) | 236 | (71.9) |
| | 120,000 | NA | | NA | | 8 | (2.4) | 86 | (26.2) | 224 | (68.3) |
| 4001 to 4500 (1219 to 1370) | 60,000 | 35 | (10.7) | 115 | (35.1) | 204 | (62.2) | 228 | (69.5) | NA | |
| | 80,000 | 23 | (7.0) | 85 | (25.9) | 150 | (45.7) | 202 | (61.6) | 224 | (68.3) |
| | 100,000 | NA | | 40 | (12.2) | 94 | (28.7) | 205 | (62.5) | 229 | (69.8) |
| | 120,000 | NA | | NA | | NA | | 83 | (25.3) | 217 | (66.1) |

* See notes at end of venting tables.
*See Table 3 for altitudes over 4500 ft. (1370 M)

**Table 2 – Deductions from Maximum Equivalent Vent Length - Ft. (M)**

| Pipe Diameter (in): | 1-1/2 | | 2 | | 2-1/2 | | 3* | | 4* | |
|---|---|---|---|---|---|---|---|---|---|---|
| **Mitered 90° Elbow** | 8 | (2.4) | 8 | (2.4) | 8 | (2.4) | NA | NA | NA | NA |
| **Medium Radius 90° Elbow** | 5 | (1.5) | 5 | (1.5) | 5 | (1.5) | NA | NA | NA | NA |
| **Long Radius 90° Elbow** | 3 | (0.9) | 3 | (0.9) | 3 | (0.9) | 3 | (0.9) | 3 | (0.9) |
| **Mitered 45° Elbow** | 4 | (1.2) | 4 | (1.2) | 4 | (1.2) | NA | NA | NA | NA |
| **Medium Radius 45° Elbow** | 2.5 | (0.8) | 2.5 | (0.8) | 2.5 | (0.8) | NA | NA | NA | NA |
| **Long Radius 45° Elbow** | 1.5 | (0.5) | 1.5 | (0.5) | 1.5 | (0.5) | 1.5 | (0.5) | 1.5 | (0.5) |
| **Tee** | 16 | (4.9) | 16 | (4.9) | 16 | (4.9) | 16 | (4.9) | 16 | (4.9) |

* Note: 3– and 4–in. Vent pipe systems require long radius elbows.

## Venting System Length Calculations

The maximum length for each vent pipe (inlet or exhaust) equals the Maximum Equivalent Vent Length (MEVL) from Table 1 or Table 3 minus the number of elbows multiplied by the deduction for each elbow in Table 2.

Standard vent terminations and concentric vent terminations count for zero deductions.

## Example

A direct-vent 60,000 Btuh furnace installed at 2100 ft. (640 m) with 2-in.(51 mm) Vent piping. Venting system includes, **FOR EACH PIPE**, (3) 90° long radius elbows, (2) 45° long radius elbows and a concentric vent kit.

| | | | | | | |
|---|---|---|---|---|---|---|
| Maximum Equivalent Vent Length | | | | = | 127 ft. | (From Table 1) |
| Deduct (3) 90 long radius | 3 | x | 3 ft. | = | - 9 ft. | (From Table 2) |
| Deduct (2) 45 long radius | 2 | x | 1.5 ft. | = | - 3 ft. | (From Table 2) |
| Maximum Vent Length | | | | = | 115 ft. | For **EACH** vent or inlet pipe |

# MAXIMUM EQUIVALENT VENT LENGTH - FT. (M)

***NOTE: Maximum Equivalent Vent Length (MEVL) does NOT include elbows or terminations. Use Table 2 - Deductions from Maximum Equivalent Vent Length to determine allowable vent length for each application.***

**Table 3 – Maximum Equivalent Vent Length - Ft. (M)**
**4501 to 10,000 Ft. (0 to 1370 M) Altitude**

| Altitude FT (M) | Unit Size | DIRECT VENT (2-PIPE) AND VENTILATED COMBUSTION AIR ONLY | | | | | | | | | |
|---|---|---|---|---|---|---|---|---|---|---|---|
| | | Vent Pipe Diameter | | | | | | | | | |
| | | 1-1/2 | | 2 | | 2-1/2 | | 3 | | 4 | |
| 4501 to 5000 (1370 to 1524) | 60,000 | 35 | (10.7) | 111 | (33.8) | 198 | (60.4) | 221 | (67.4) | NA | |
| | 80,000 | 23 | (7.0) | 85 | (25.9) | 146 | (44.5) | 195 | (59.4) | 216 | (65.8) |
| | 100,000 | NA | | 40 | (12.2) | 91 | (27.7) | 200 | (61.0) | 222 | (67.7) |
| | 120,000 | NA | | NA | | NA | | 80 | (24.4) | 211 | (64.3) |
| 5001 to 6000 (1524 to 1829) | 60,000 | 37 | (11.3) | 103 | (31.4) | 186 | (56.7) | 207 | (63.1) | NA | |
| | 80,000 | 22 | (6.7) | 76 | (23.2) | 137 | (41.8) | 183 | (55.8) | 200 | (61.0) |
| | 100,000 | NA | | 33 | (10.1) | 85 | (25.9) | 188 | (57.3) | 208 | (63.4) |
| | 120,000 | NA | | NA | | NA | | 74 | (22.6) | 199 | (60.7) |
| 6001 to 7000 (1829 to 2134) | 60,000 | 35 | (10.7) | 96 | (29.3) | 174 | (53.0) | 194 | (59.1) | NA | |
| | 80,000 | 20 | (6.1) | 71 | (21.6) | 120 | (36.6) | 171 | (52.1) | 185 | (56.4) |
| | 100,000 | NA | | 31 | (9.4) | 79 | (24.1) | 178 | (54.3) | 195 | (59.4) |
| | 120,000 | NA | | NA | | NA | | 68 | (20.7) | 187 | (57.0) |
| 7001 to 8000 (2134 to 2438) | 60,000 | 32 | (9.8) | 89 | (27.1) | 163 | (49.7) | 181 | (55.2) | NA | |
| | 80,000 | 18 | (5.5) | 66 | (20.1) | 120 | (36.6) | 159 | (48.5) | 170 | (51.8) |
| | 100,000 | NA | | 29 | (8.8) | 73 | (22.3) | 167 | (50.9) | 182 | (55.5) |
| | 120,000 | NA | | NA | | NA | | 62 | (18.9) | 175 | (53.3) |
| 8001 to 9000 (2438 to 2743) | 60,000 | 30 | (9.1) | 82 | (25.0) | 152 | (46.3) | 168 | (51.2) | NA | |
| | 80,000 | 17 | (5.2) | 62 | (18.9) | 111 | (33.8) | 148 | (45.1) | 156 | (47.5) |
| | 100,000 | NA | | 27 | (8.2) | 67 | (20.4) | 157 | (47.9) | 170 | (51.8) |
| | 120,000 | NA | | NA | | NA | | 56 | (17.1) | 164 | (50.0) |
| 9001 to 10,000 (2743 to 3048) | 60,000 | 27 | (8.2) | 76 | (23.2) | 142 | (43.3) | 156 | (47.5) | NA | |
| | 80,000 | 15 | (4.6) | 57 | (17.4) | 103 | (31.4) | 137 | (41.8) | 142 | (43.3) |
| | 100,000 | NA | | 24 | (7.3) | 62 | (18.9) | 147 | (44.8) | 157 | (47.9) |
| | 120,000 | NA | | NA | | NA | | 51 | (15.5) | 153 | (46.6) |

**Notes:**

1. 3– and 4–in. Vent pipe systems require long radius elbows.
2. Vent sizing for Canadian installations over 4500 ft. (1370 M) above sea level are subject to acceptance by the local authorities having jurisdiction.
3. NA – Not allowed; pressure switch will not close, or flame disturbance may result.
4. Do not use pipe size greater than those specified in table or incomplete combustion, flame disturbance, or flame sense lockout may occur.
5. Size both the combustion –air and vent pipe independently, then use the larger diameter for both pipes.
6. Assume the two 45° elbows equal one 90° elbow. Wide radius elbows are desirable and may be required in some cases.
7. Elbows and pipe sections within the furnace casing and at the vent termination should not be included in vent length or elbow count.
8. The minimum pipe length is 5 ft. (1.5 M) for all applications.
9. Use 3–in. (76 mm) diameter vent termination kit for installations requiring 4–in. (102 mm) diameter pipe.

# MAXIMUM ALLOWABLE EXPOSED VENT PIPE LENGTH INSULATION TABLE - FT. / M

| Maximum Length of Uninsulated and Insulated Vent Pipe-Ft (M) | | | | | | | | | | | | | | | | | |
|---|---|---|---|---|---|---|---|---|---|---|---|---|---|---|---|---|---|
| Modulating Furnace High Heat Input | Winter Design Temp °F (°C) | Pipe Length in Ft. & M | No Insulation | | | | | 3/8-in. (9.5 mm) | | | | | 1/2-in. (12.7 mm) | | | | |
| | | | Pipe Diameter-in. (mm) | | | | | Pipe Diameter-in. (mm) | | | | | Pipe Diameter-in. (mm) | | | | |
| | | | 1.5 | 2.0 | 2.5 | 3.0 | 4.0 | 1.5 | 2.0 | 2.5 | 3.0 | 4.0 | 1.5 | 2.0 | 2.5 | 3.0 | 4.0 |
| | | | (38) | (51) | (64) | (76) | (102) | (38) | (51) | (64) | (76) | (102) | (38) | (51) | (64) | (76) | (102) |
| 60000 | 20 (-10) | Ft. | 34.0 | 29.0 | 28.0 | 23.0 | N/A | 55.0 | 88.0 | 79.0 | 69.0 | N/A | 55.0 | 104.0 | 93.0 | 81.0 | N/A |
| | | M | 10.4 | 8.8 | 8.5 | 7.0 | N/A | 16.8 | 26.8 | 24.1 | 21.0 | N/A | 16.8 | 31.7 | 28.3 | 24.7 | N/A |
| | 0 (-20) | Ft. | 14.0 | 9.0 | 7.0 | 0.0 | N/A | 55.0 | 49.0 | 43.0 | 34.0 | N/A | 55.0 | 60.0 | 52.0 | 42.0 | N/A |
| | | M | 4.3 | 2.7 | 2.1 | 0.0 | N/A | 16.8 | 14.9 | 13.1 | 10.4 | N/A | 16.8 | 18.3 | 15.8 | 12.8 | N/A |
| | -20 (-30) | Ft. | 5.0 | 0.0 | 0.0 | 0.0 | N/A | 41.0 | 32.0 | 26.0 | 18.0 | N/A | 50.0 | 40.0 | 33.0 | 24.0 | N/A |
| | | M | 1.5 | 0.0 | 0.0 | 0.0 | N/A | 12.5 | 9.8 | 7.9 | 5.5 | N/A | 15.2 | 12.2 | 10.1 | 7.3 | N/A |
| | -40 (-40) | Ft. | 0.0 | 0.0 | 0.0 | 0.0 | N/A | 30.0 | 21.0 | 16.0 | 8.0 | N/A | 37.0 | 28.0 | 22.0 | 13.0 | N/A |
| | | M | 0.0 | 0.0 | 0.0 | 0.0 | N/A | 9.1 | 6.4 | 4.9 | 2.4 | N/A | 11.3 | 8.5 | 6.7 | 4.0 | N/A |
| | | | | | | | | | | | | | | | | | |
| 80000 | 20 (-10) | Ft. | 35.0 | 39.0 | 39.0 | 33.0 | 25.0 | 35.0 | 118.0 | 107.0 | 92.0 | 76.0 | 35.0 | 130.0 | 125.0 | 109.0 | 90.0 |
| | | M | 10.7 | 11.9 | 11.9 | 10.1 | 7.6 | 10.7 | 36.0 | 32.6 | 28.0 | 23.2 | 10.7 | 39.6 | 38.1 | 33.2 | 27.4 |
| | 0 (-20) | Ft. | 22.0 | 16.0 | 14.0 | 7.0 | 0.0 | 35.0 | 69.0 | 60.0 | 49.0 | 35.0 | 35.0 | 83.0 | 72.0 | 60.0 | 45.0 |
| | | M | 6.7 | 4.9 | 4.3 | 2.1 | 0.0 | 10.7 | 21.0 | 18.3 | 14.9 | 10.7 | 10.7 | 25.3 | 21.9 | 18.3 | 13.7 |
| | -20 (-30) | Ft. | 11.0 | 5.0 | 2.0 | 0.0 | 0.0 | 35.0 | 46.0 | 39.0 | 29.0 | 16.0 | 35.0 | 57.0 | 48.0 | 37.0 | 23.0 |
| | | M | 3.4 | 1.5 | 0.6 | 0.0 | 0.0 | 10.7 | 14.0 | 11.9 | 8.8 | 4.9 | 10.7 | 17.4 | 14.6 | 11.3 | 7.0 |
| | -40 (-40) | Ft. | 4.0 | 0.0 | 0.0 | 0.0 | 0.0 | 35.0 | 33.0 | 26.0 | 17.0 | 4.0 | 35.0 | 41.0 | 34.0 | 24.0 | 11.0 |
| | | M | 1.2 | 0.0 | 0.0 | 0.0 | 0.0 | 10.7 | 10.1 | 7.9 | 5.2 | 1.2 | 10.7 | 12.5 | 10.4 | 7.3 | 3.4 |
| | | | | | | | | | | | | | | | | | |
| 100000 | 20 (-10) | Ft. | N/A | 47.0 | 47.0 | 41.0 | 32.0 | N/A | 50.0 | 110.0 | 112.0 | 93.0 | N/A | 50.0 | 110.0 | 132.0 | 110.0 |
| | | M | N/A | 14.3 | 14.3 | 12.5 | 9.8 | N/A | 15.2 | 33.5 | 34.1 | 28.3 | N/A | 15.2 | 33.5 | 40.2 | 33.5 |
| | 0 (-20) | Ft. | N/A | 21.0 | 19.0 | 12.0 | 1.0 | N/A | 50.0 | 74.0 | 61.0 | 45.0 | N/A | 50.0 | 89.0 | 74.0 | 57.0 |
| | | M | N/A | 6.4 | 5.8 | 3.7 | 0.3 | N/A | 15.2 | 22.6 | 18.6 | 13.7 | N/A | 15.2 | 27.1 | 22.6 | 17.4 |
| | -20 (-30) | Ft. | N/A | 8.0 | 6.0 | 0.0 | 0.0 | N/A | 50.0 | 49.0 | 38.0 | 23.0 | N/A | 50.0 | 60.0 | 48.0 | 32.0 |
| | | M | N/A | 2.4 | 1.8 | 0.0 | 0.0 | N/A | 15.2 | 14.9 | 11.6 | 7.0 | N/A | 15.2 | 18.3 | 14.6 | 9.8 |
| | -40 (-40) | Ft. | N/A | 1.0 | 0.0 | 0.0 | 0.0 | N/A | 42.0 | 34.0 | 24.0 | 10.0 | N/A | 50.0 | 43.0 | 32.0 | 18.0 |
| | | M | N/A | 0.3 | 0.0 | 0.0 | 0.0 | N/A | 12.8 | 10.4 | 7.3 | 3.0 | N/A | 15.2 | 13.1 | 9.8 | 5.5 |
| | | | | | | | | | | | | | | | | | |
| 120000 | 20 (-10) | Ft. | N/A | N/A | 15.0 | 49.0 | 40.0 | N/A | N/A | 15.0 | 100.0 | 111.0 | N/A | N/A | 15.0 | 100.0 | 131.0 |
| | | M | N/A | N/A | 4.6 | 14.9 | 12.2 | N/A | N/A | 4.6 | 30.5 | 33.8 | N/A | N/A | 4.6 | 30.5 | 39.9 |
| | 0 (-20) | Ft. | N/A | N/A | 15.0 | 17.0 | 6.0 | N/A | N/A | 15.0 | 75.0 | 57.0 | N/A | N/A | 15.0 | 90.0 | 70.0 |
| | | M | N/A | N/A | 4.6 | 5.2 | 1.8 | N/A | N/A | 4.6 | 22.9 | 17.4 | N/A | N/A | 4.6 | 27.4 | 21.3 |
| | -20 (-30) | Ft. | N/A | N/A | 10.0 | 2.0 | 0.0 | N/A | N/A | 15.0 | 48.0 | 32.0 | N/A | N/A | 15.0 | 59.0 | 42.0 |
| | | M | N/A | N/A | 3.0 | 0.6 | 0.0 | N/A | N/A | 4.6 | 14.6 | 9.8 | N/A | N/A | 4.6 | 18.0 | 12.8 |
| | -40 (-40) | Ft. | N/A | N/A | 1.0 | 0.0 | 0.0 | N/A | N/A | 15.0 | 32.0 | 17.0 | N/A | N/A | 15.0 | 41.0 | 25.0 |
| | | M | N/A | N/A | 0.3 | 0.0 | 0.0 | N/A | N/A | 4.6 | 9.8 | 5.2 | N/A | N/A | 4.6 | 12.5 | 7.6 |

* Pipe length (ft) specified for maximum pipe lengths located in unconditioned spaces. Pipes located in unconditioned space cannot exceed total allowable pipe length calculated from Table 1 or 3.

† Insulation thickness based on R value of 3.5 per in.

## RETURN AIR TEMPERATURE

This furnace is designed for continuous return-air minimum temperature of 60°F (15°C) db or intermittent operation down to 55°F (13°C) db such as when used with a night setback thermometer. Return-air temperature must not exceed 80°F (27°C) db. Failure to follow these return air limits may affect reliability of heat exchangers, motors and controls.

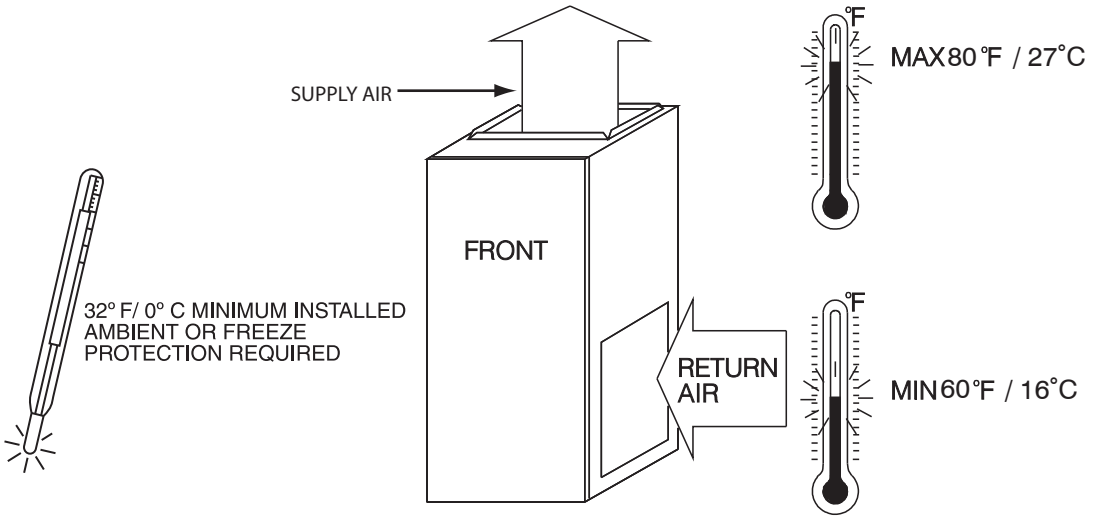


A10490

## MINIMUM CLEARANCES TO COMBUSTIBLE MATERIALS

| POSITION | CLEARANCE |
|---|---|
| Rear | 0 (0 mm) |
| Front (Combustion air openings in furnace and in structure) | 1 in. (25 mm) |
| Required for service | *24 in. (610 mm) |
| All Sides of Supply Plenum | 1 in. (25 mm) |
| Sides | 0 (0 mm) |
| Vent | 0 (0 mm) |
| Top of Furnace | 1 in. (25 mm) |

* Recommended

## COMBUSTION-AIR PIPE FOR NON-DIRECT (1-PIPE) VENT APPLICATION

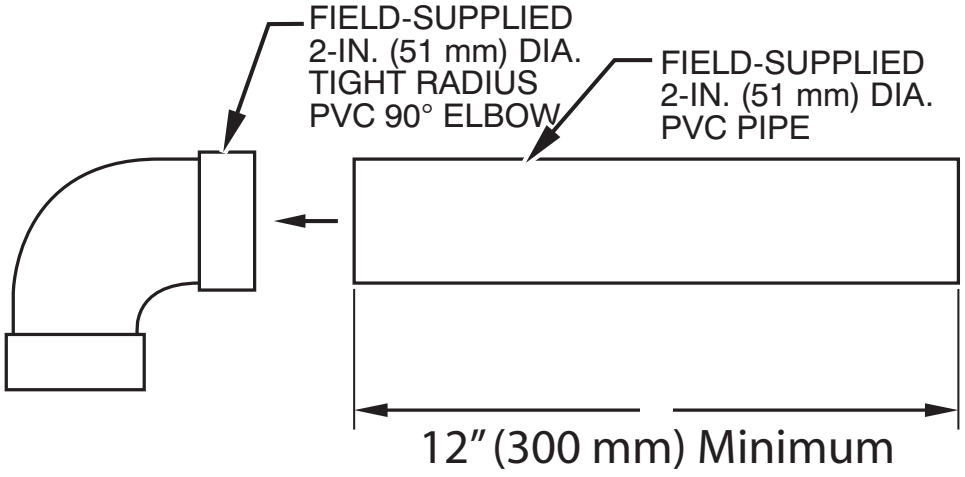


A11487

# DOWNFLOW SUBBASE

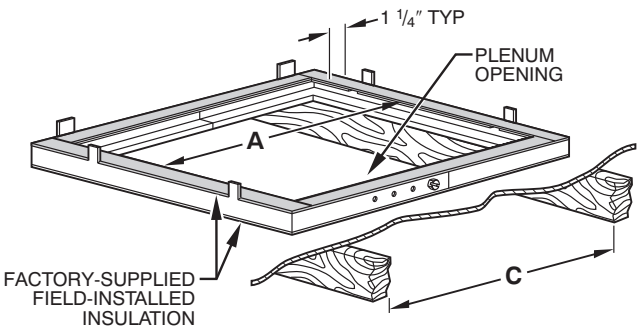


A97427

**Assembled**

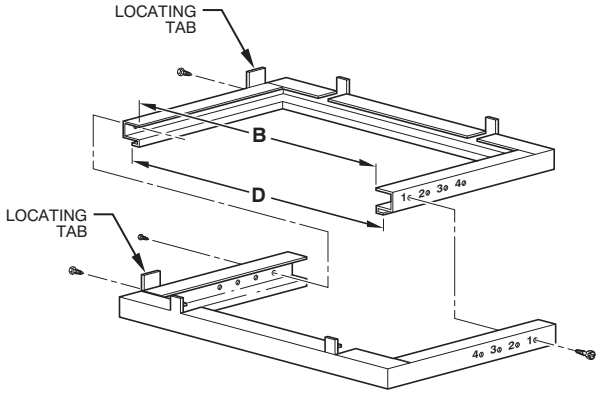


A88207

**Disassembled**

| DIMENSIONS (IN. / MM) | | | | | | |
|---|---|---|---|---|---|---|
| FURNACE CASING WIDTH | FURNACE IN DOWNFLOW APPLICATION | PLENUM OPENING* | | FLOOR OPENING | | HOLE NO. FOR WIDTH ADJUSTMENT |
| | | A | B | C | D | |
| 17–1/2 (444.5) | Furnace with or without Cased Coil Assembly or Coil Box | 15–1/8 (384.2) | 19 (482.6) | 16–3/4 (425.5) | 20–3/8 (517.5) | 3 |
| 21 (533.4) | Furnace with or without Cased Coil Assembly or Coil Box | 18–5/8 (396.4) | 19 (482.6) | 20–1/4 (514.4) | 20–3/8 (517.5) | 2 |
| 24–1/2 (622.3) | Furnace with or without Cased Coil Assembly or Coil Box | 22–1/8 (562.0) | 19 (482.6) | 23–3/4 (603.3) | 20–3/8 (517.5) | 1 |

*The plenum should be constructed 1/4–in. (6 mm) smaller in width and depth than the plenum dimensions shown above.

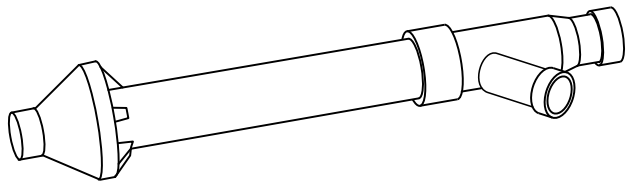

**Concentric Vent Kit**

A93086

A concentric vent kit allows vent and combustion-air pipes to terminate through a single exit in a roof or side wall. One pipe runs inside the other allowing venting through the inner pipe and combustion air to be drawn in through the outer pipe.

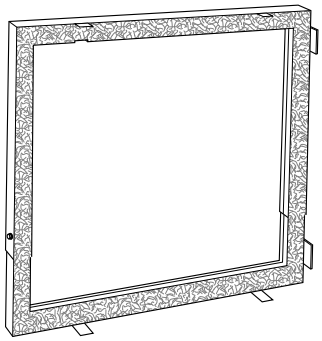

**Downflow Subbase**

A88202

One base fits all furnace sizes. The base is designed to be installed between the furnace and a combustible floor when no coil box is used or when a coil box other than a Carrier cased coil is used. It is CSA design certified for use with Carrier branded furnaces when installed in downflow applications.

# MEDIA FILTER CABINET

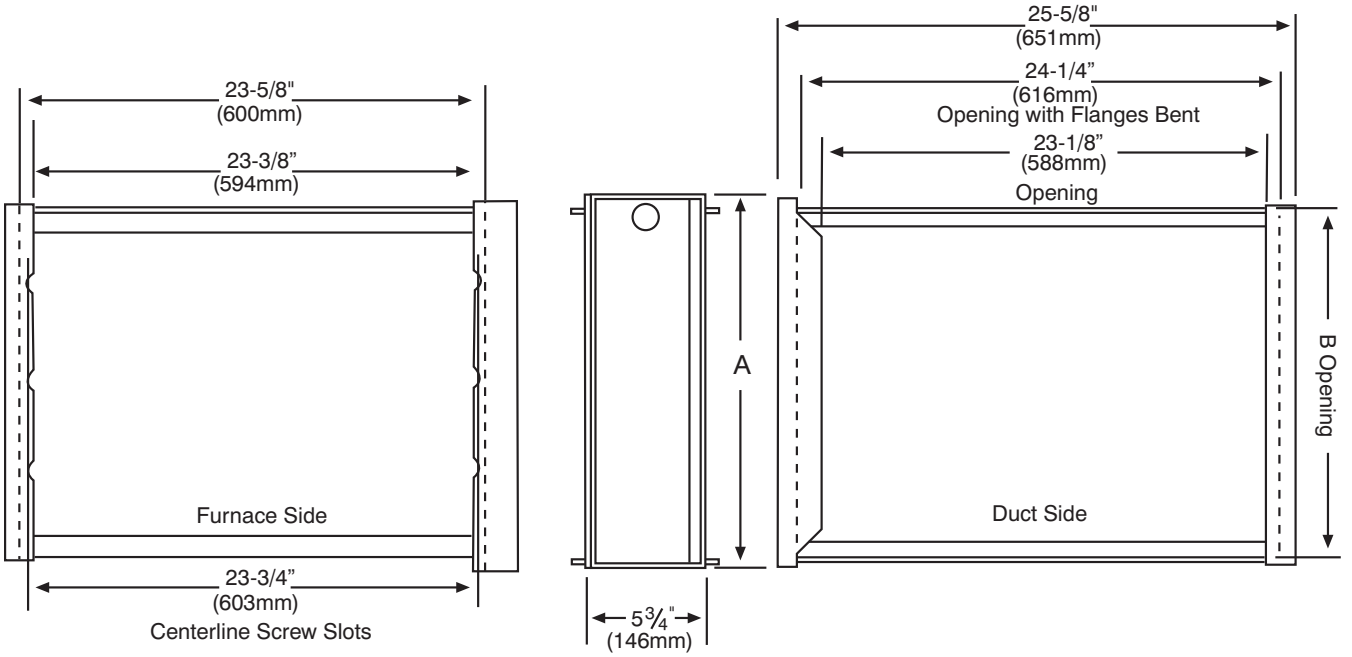


A11456A

| DIMENSIONS (IN. / MM) | | | |
|---|---|---|---|
| **MEDIA FILTER CABINET** | **A** | **B** | **SHIPPED WITH SIZES** |
| 16 (406.4) | 17 (432.8) | 16 (406.4) | 040–08, 040–12, 060–08, 060–12, 080–12, 080–16 |
| 20 (508.0) | 21 (533.4) | 20 (508) | 080–20, 100–16, 100–20 |
| 24 (609.6) | 25 (635.0) | 24 (609.6) | 120–20, 140–20 |

# TYPICAL WIRING SCHEMATIC

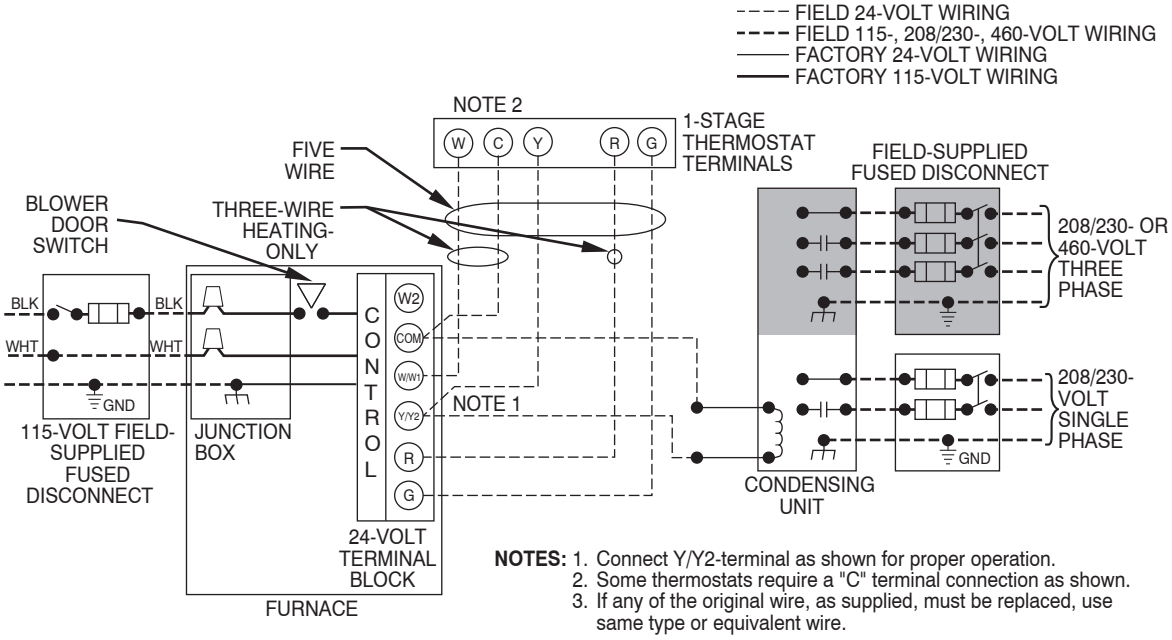


**NOTES:** 1. Connect Y/Y2-terminal as shown for proper operation.
2. Some thermostats require a "C" terminal connection as shown.
3. If any of the original wire, as supplied, must be replaced, use same type or equivalent wire.

A11401

# DIMENSIONAL DRAWING

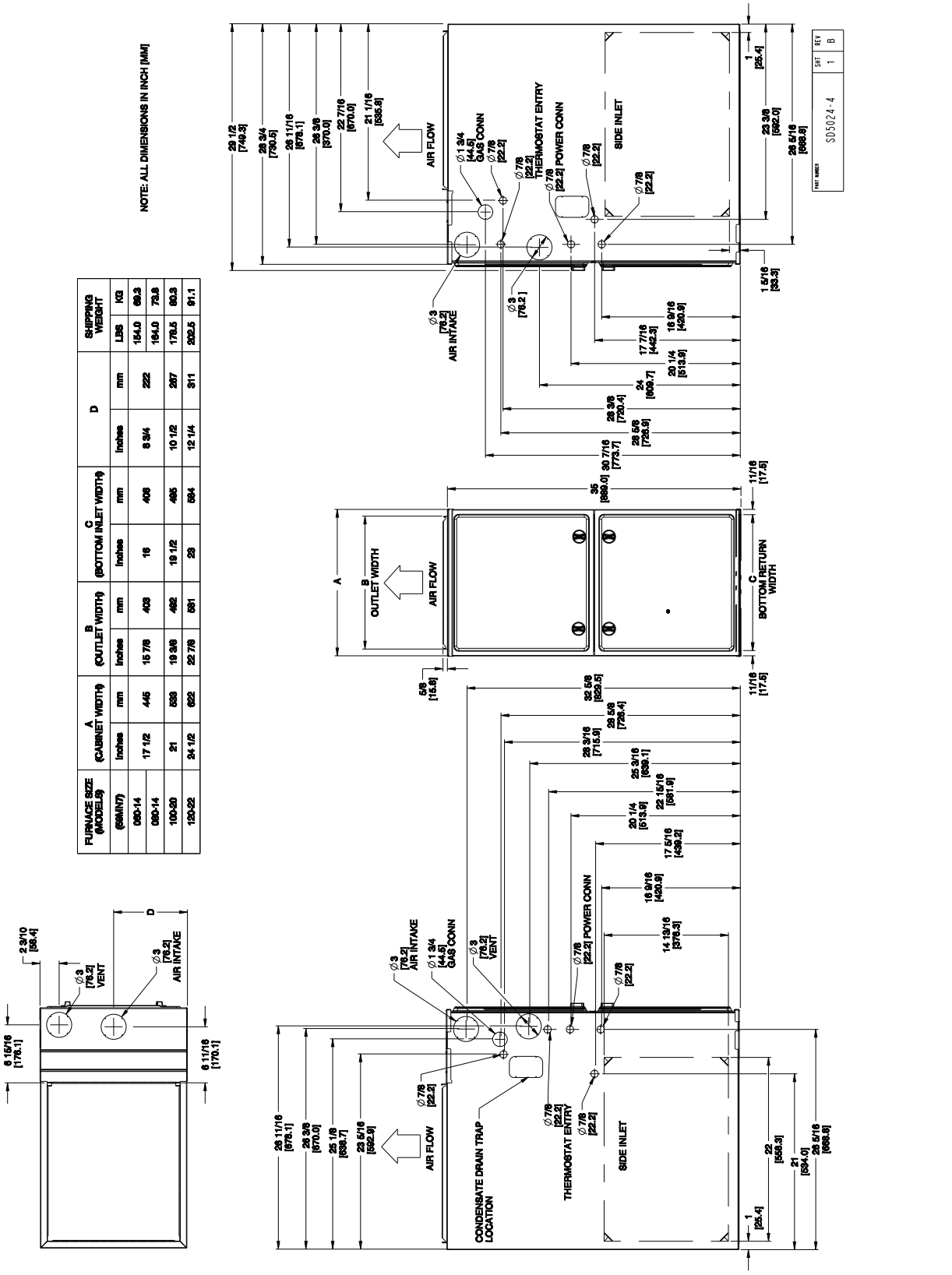


| FURNACE SIZE (MODEL#) | A (CABINET WIDTH) | | B (OUTLET WIDTH) | | C (BOTTOM INLET WIDTH) | | D | | SHIPPING WEIGHT | |
|---|---|---|---|---|---|---|---|---|---|---|
| (SIM/NT) | Inches | mm | Inches | mm | Inches | mm | Inches | mm | LBS | KG |
| 060-14 | 17 1/2 | 445 | 15 7/8 | 403 | 16 | 406 | 8 3/4 | 222 | 154.0 | 69.9 |
| 080-14 | | | | | | | | | 164.0 | 74.8 |
| 100-20 | 21 | 533 | 19 3/8 | 492 | 19 1/2 | 495 | 10 1/2 | 267 | 179.5 | 80.3 |
| 120-22 | 24 1/2 | 622 | 22 7/8 | 581 | 23 | 584 | 12 1/4 | 311 | 202.5 | 91.1 |

A11450

**Fig. 1 - Dimensional Drawing**

**NOTE**: Doors may vary by model.

a. For 800 CFM – 16 – in. (406 mm) round or 14 1/2 x 12 – in. (368 x 305 mm) rectangle.

b. For 1200 CFM – 20 – in. (508 mm) round or 14 1/2 x 19 1/2 – in. (368 x 495 mm) rectangle.

c. For 1600 CFM – 22 – in. (559 mm) round or 14 1/2 x 22 1/16 – in. (368 x 560mm) rectangle.

d. For airflow requirements above 1800 CFM, see Air Delivery table in these installation instructions for specific use of single side inlets. The use of both side inlets, a combination of 1 side and the bottom, or the bottom only return air openings may be required for airflow requirements above 1800 CFM at 0.5 in. W.C. E.S.P.

# GUIDE SPECIFICATIONS

## General

### System Description

Furnish a _____ 4-way multipoise gas-fired condensing furnace for use with natural gas or propane (factory-authorized conversion kit required for propane); furnish cold air return plenum; furnish external media cabinet for use with accessory media filter or standard filter.

### Quality Assurance

Unit will be designed, tested and constructed to the current ANSI Z 21.47/CSA 2.3 design standard for gas-fired central furnaces.

Unit will be third party certified by CSA to the current ANSI Z 21.47/CSA 2.3 design standard for gas-fired central furnaces. Unit will carry the CSA Blue Star® and Blue Flame® labels. Unit efficiency testing will be performed per the current DOE test procedure as listed in the Federal Register.

Unit will be certified for capacity and efficiency and listed in the latest AHRI Consumer's Directory of Certified Efficiency Ratings.

Unit will carry the current Federal Trade Commission Energy Guide efficiency label.

### Delivery, Storage, and Handling

Unit will be shipped as single package only and is stored and handled per unit manufacturer's recommendations.

### Warranty (for inclusion by specifying engineer)

U.S. and Canada only. Warranty certificate available upon request.

### Equipment

Blower Wheel and ECM Blower Motor

Galvanized blower wheel shall be centrifugal type, statically and dynamically balanced. Blower motor of ECM type shall be permanently lubricated with sealed ball bearings, of _____hp, and have infinitely variable speed from 300-1300 RPM operating only when 24-VAC motor inputs are provided. Blower motor shall be direct drive and soft mounted to the blower scroll to reduce vibration transmission.

Filters

Furnace shall have reusable-type filters. Filter shall be _____ in. (mm) X _____ in. (mm). An accessory highly efficient Media Filter is available as an option. _____ Media Filter.

Casing

Casing shall be of .030 in. thickness minimum, pre-painted galvanized steel.

Draft Inducer Motor

Draft inducer motor shall be variable-speed design.

Primary Heat Exchangers

Primary heat exchangers shall be 3-Pass corrosion- resistant aluminized steel of fold-and-crimp sectional design and applied operating under negative pressure.

Secondary Heat Exchangers

Secondary heat exchangers shall be of a stainless steel flow-through of fin-and-tube design and applied operating under negative pressure.

Controls

Controls shall include a micro-processor-based integrated electronic control board with at least 16 service troubleshooting codes displayed via diagnostic flashing LED light on the control, a self-test feature that checks all major functions of the furnace, and a replaceable automotive-type circuit protection fuse. Multiple operational settings available, including separate blower speeds for all modulating heating capacities, low cooling, high cooling and continuous fan. Continuous fan speed may be adjusted from the thermostat. Cooling airflow will be selectable between 325 and 400 CFM per ton of air conditioning. Features will also include temporary reduced airflow in the cooling mode for improved dehumidification when an Infinity Control or TP-PRH edge® is selected as the thermostat.

### Operating Characteristics

Heating capacity shall be _____ Btuh input; _____ Btuh output capacity.

Fuel Gas Efficiency shall be _____ AFUE.

Air delivery shall be _____ cfm minimum at 0.50 in. W.C. external static pressure.

Dimensions shall be: depth_____in. (mm); width _____in. (mm); height_____in. (mm) (casing only). Height shall be _____in. (mm) with A/C coil and _____in. (mm) overall with plenum.

### Electrical Requirements

Electrical supply shall be 115 volts, 60 Hz, single-phase (nominal). Minimum wire size shall be _____AWG; maximum fuse size of HACR-type designated circuit breaker shall be _____ amps.

### Special Features

Refer to section of the product data identifying accessories and descriptions for specific features and available enhancements.

Copyright 2011 Carrier Corp. • 7310 W. Morris St. • Indianapolis, IN 46231
Printed in U.S.A. Edition Date: 09/11 **Catalog No: 59MN7A-01PD**

**Manufacturer reserves the right to change, at any time, specifications and designs without notice and without obligations.**
Replaces: NEW