59TP6A
Performance Two–Stage, Variable Speed 4–Way Multipoise Condensing Gas Furnace Series 2, 3

Carrier
turn to the experts

Product Data

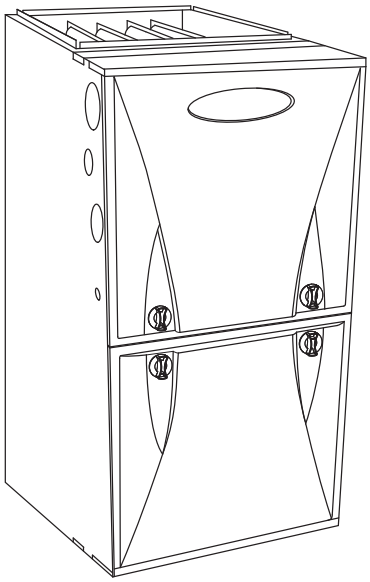

A11263

The 59TP6A Multipoise Variable-Speed Condensing Gas Furnace features the two-stage Performance™ System. The Comfort Heat® technology two-stage gas valve is at the heart of the comfort provided by this furnace, along with the variable-speed ECM blower motor, and two-speed inducer motor. With an Annual Fuel Utilization Efficiency (AFUE) up to 96.5%, the Performance™ Series two-stage gas furnace provides exceptional savings when compared to standard gas furnaces. This Performance Gas Furnace also features 4-way multipoise installation flexibility, and is available in eight model sizes. The 59TP6A can be vented for direct vent/two-pipe, ventilated combustion air, or single-pipe applications. All units meet California Air Quality Management District emission requirements. All sizes are design certified in Canada.

STANDARD FEATURES

- All sizes meet ENERGY STAR® Version 4.0 criteria for gas furnaces: 95+AFUE; AMACF electrical rating; 2% or less cabinet airflow leakage.
- Quiet operation. Compare for yourself at HVACpartners.com.
- Series 3 or greater (sizes 080-20, 100-20, 120-22) allow 15 Amp breaker with accessory (order separately).
- Ideal height 35” (889 mm) cabinet: short enough for taller coils, but still allows enough room for service.
- Silicon Nitride Perfect Light™ Hot Surface Igniter.
- Ideal Humidity System® technology, including SmartEvap™ technology, when paired with appropriate thermostat.
- ComfortFan™ technology allows control of continuous fan speed from a compatible thermostat.
- 4-way multipoise design for upflow, downflow or horizontal installations, with unique vent elbow and optional through-the-cabinet downflow venting capability.
- Full-featured variable-speed blower motor, two-speed inducer motor, and two-stage gas valve.
- Self-diagnostics.
- Adjustable blower speed for cooling, continuous fan, and dehumidification.
- Aluminized-steel primary heat exchanger.
- Stainless-steel condensing secondary heat exchanger.
- Propane convertible (See Accessory list).
- Factory-configured ready for upflow applications.
- Fully-insulated casing including blower section.
- Convenient Air Purifier and Humidifier connections.
- Direct-vent/sealed combustion, single-pipe venting or ventilated combustion air.
- Installation flexibility: sidewall or vertical vent.
- Residential installations may be eligible for consumer financing through the Retail Credit Program.
- Certified to leak 2% or less of nominal air conditioning CFM delivered when pressurized to 1-in. water column with all present air inlets, air outlets, and condensate drain port(s) sealed.

Performance SERIES IdealHumidity ComfortHeat

ENERGY STAR ISO 9001 CERTIFIED DESIGN CERTIFIED AHRI CERTIFIED

Use of the AHRI Certified TM Mark indicates a manufacturer's participation in the program For verification of certification for individual products, go to www.ahridirectory.org.

SAP ORDERING NO.	CASING DIMENSIONS (IN.)			RATED HEATING OUTPUT† (BTUH)		AFUE		ENERGY STAR®	HEATING AIRFLOW			COOLING CFM @ 0.5 ESP (in. W.C.)	MOTOR HP - SPEED (VARIABLE SPEED)
	H	D	W	High	Low	UPFLOW/ HORIZON-TAL	DOWN-FLOW		CFM‡ (High Heating	CFM (Low Heating)	High Heating ESP (in. W.C.)		
59TP6A040E141110	35	29.5	14.2	39,000	25,000	96.5%	95.0%	YES	815	660	0.10	905	1/2
59TP6A040E171112	35	29.5	17.5	39,000	25,000	96.0%	95.0%	NO	860	660	0.10	1065	1/2
59TP6A060E141112	35	29.5	14.2	58,000	38,000	95.0%	95.0%	YES	1120	910	0.12	1065	1/2
59TP6A060E171114	35	29.5	17.5	58,000	38,000	96.3%	95.0%	YES	1135	860	0.12	1475	3/4
59TP6A080E171116	35	29.5	17.5	78,000	50,000	96.2%	95.0%	YES	1505	1160	0.15	1610	3/4
59TP6A080E211120	35	29.5	21.0	78,000	51,000	96.5%	95.0%	YES	1555	1200	0.15	2005	1
59TP6A100E211120	35	29.5	21.0	97,000	63,000	96.1%	95.0%	YES	1865	1435	0.20	2005	1
59TP6A120E241122	35	29.5	24.0	117,000	76,000	96.5%	95.0%	YES	2375	1675	0.20	2115	1

†Capacity in accordance with DOE test procedures. Ratings are position dependent. See rating plate.
‡Minimum heat CFM when low–heat rise adjustment switch (SW 1–3) and comfort/efficiency adjustment switch (SW1–4) on control center are OFF.
ESP – External Static Pressure

FEATURES AND BENEFITS

Comfort Heat Technology® — This feature with Adaptive Control is a proprietary function that promotes homeowner comfort through two stages of heating. This Carrier furnace offers a patented algorithm that continually monitors and adjusts furnace operation by looking at both current and past conditions to determine the most effective stage of heating and the amount of time to run each stage, every cycle.

SmartEvap™ Technology — When paired with a compatible thermostat, this dehumidification feature overrides the cooling blower off-delay when there is a call for dehumidification. By deactivating the blower off-delay, SmartEvap technology prevents condensate that remains on the coil after a dehumidification cycle from re-humidifying throughout the home. This results in reduced humidity and a more comfortable indoor environment for the homeowner.

Unlike competitive systems, SmartEvap technology only overrides the cooling blower off delay when humidity control is needed. Once humidity is back in control, SmartEvap re-enables the energy-saving cooling blower off-delay.

ComfortFan™ Technology — Sometimes the constant fan setting on a standard furnace system can actually reduce homeowner comfort by providing too much or too little air! Fan On Plus technology improves comfort all year long by allowing the homeowner to select the continuous fan speed of their choice using a compatible thermostat.

HYBRID HEAT® Dual Fuel system — This system can provide more control over your monthly energy bills by automatically selecting the most economical method of heating. With HYBRID HEAT, our system automatically switches between the gas furnace and the electric heat pump as outside temperatures change to maintain greater efficiency and comfort than with any traditional single-source heating system. The heat pump also delivers high-efficiency cooling in the summer.

Power Heat™ Igniter — Carrier's unique SiN igniter is not only physically robust but it is also electrically robust. It is capable of running at line voltage and does not require complex voltage regulators as do other brands. This unique feature further enhances the gas furnace reliability and continues Carrier's tradition of technology leadership and innovation in providing a reliable and durable product.

Full-Featured, Variable Speed Motors — Our variable-speed ECM (Electronically Commutated Motor) optimizes comfort levels in the home year round; features such as passive/active dehumidification, ramping profiles, and quiet operation. They can provide cooling match enhancements to increase the effective SEER of select Carrier air conditioner or heat pump system. This motor does not report back RPM and static pressure to enable static pressure reporting to the UI or zoning system, which is required for zoning, active filter monitoring and system static pressure reporting.

Reliable Heat Exchanger Design — The aluminized steel, clam shell primary heat exchanger was re-engineered to achieve greater efficiency out of a smaller size. The first two passes of the heat exchanger are based on the current 80% product, a design with more than ten years of field-proven performance and success. These innovations, paired with the continuation of a crimped, no-weld seam create an efficient, robust design for this essential component.

The condensing heat exchanger, a stainless steel fin and tube design, is positioned in the furnace to extract additional heat. Stainless steel coupling box componentry between heat exchangers has exceptional corrosion resistance in both natural gas and propane applications.

Optional Media Filter Cabinet — Enhanced indoor air quality in the home is made easier with our media filter cabinet When installed as a part of the system, this cabinet allows for easy and convenient addition of a Carrier high efficiency air filter.

4-Way Multipoise Design — One model for all applications – there is no need to stock special downflow or horizontal models when one unit will do it all. The new heat exchanger design allows these units to achieve the certified AFUE in all positions.

Direct or Single-pipe Venting, or Optional Ventilated Combustion Air — This furnace can be installed as a 2-pipe (Direct Vent) furnace, in an optional ventilated combustion air application, or in single-pipe, non-direct vent applications. This provides added flexibility to meet diverse installation needs.

Sealed Combustion System — This furnace brings in combustion air from outside the furnace, which results in especially quiet operation. By sealing the entire combustion vestibule, the entire furnace can be made quieter, not just the burners.

Insulated Casing — Foil-faced insulation in heat exchanger section of the casing minimizes heat loss. The acoustical insulation in the blower compartment reduces air and motor noise for quiet operation.

Monoport Burners — The burners are specially designed and finely tuned for smooth, quiet combustion and economical operation.

Bottom Closure — Factory-installed for side return; easily removable for bottom return. The multi-use bottom closure can also serve for roll-out protection in horizontal applications, and act as the bottom closure for the optional return air base accessory.

Certifications — This furnace is CSA (AGA and CGA) design certified for use with natural and propane gases. The furnace is factory-shipped for use with natural gas. A CSA listed gas conversion kit is required to convert furnace for use with propane gas. The efficiency is AHRI efficiency rating certified. This furnace meets California Air Quality Management District emission requirements.

MODEL NUMBER NOMENCLATURE

Example of Model Number

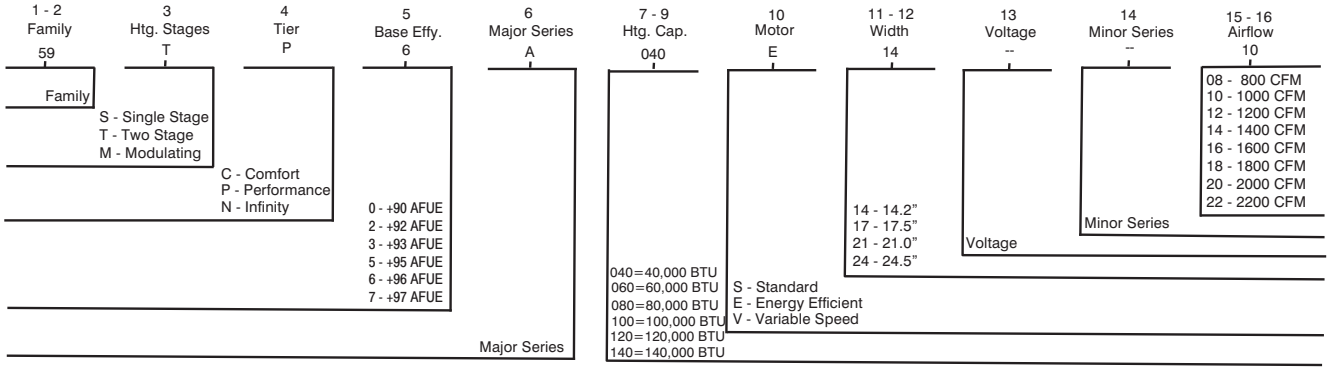

Not all familes have these models.

A14368

59TP6A

FURNACE COMPONENTS

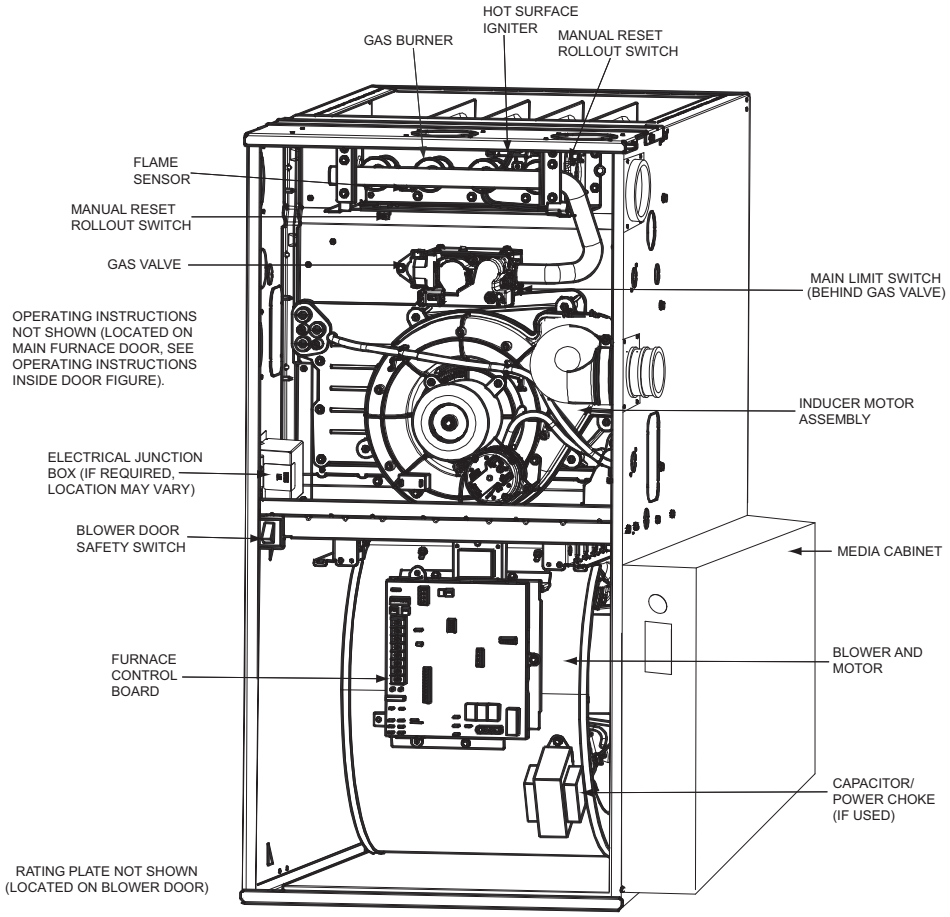

REPRESENTATIVE DRAWING ONLY, SOME MODELS MAY VARY IN APPEARANCE.

A11408

SPECIFICATIONS

The furnace should be sized to provide 100 percent of the design heating load requirement plus any margin that occurs because of furnace model size capacity increments. None of the furnace model sizes can be used if the heating load is 20,000 BTU or lower. Use Air Conditioning Contractors of America (Manual J and S); American Society of Heating, Refrigerating, and Air-Conditioning Engineers; or other approved engineering method to calculate heating load estimates and select the furnace. Excessive oversizing of the furnace may cause the furnace and/or vent to fail prematurely, customer discomfort and/or vent freezing.

Failure to follow these guidelines is considered faulty installation and/or misapplication of the furnace; and resulting failure, damage, or repairs may impact warranty coverage.

59TP6A

Heating Capacity and Efficiency			**040-10**	**040-12**	**060-12**	**060-14**	**080-16**	**080-20**	**100-20**	**120-22**
Input	High Heat	(BTUH)	40,000	40,000	60,000	60,000	80,000	80,000	100,000	120,000
	Low Heat	(BTUH)	26,000	26,000	39,000	39,000	52,000	52,000	65,000	78,000
Output	High Heat	(BTUH)	39,000	39,000	58,000	58,000	78,000	78,000	97,000	117,000
	Low Heat	(BTUH)	25,000	25,000	38,000	38,000	50,000	51,000	63,000	76,000
Certified Temperature Rise Range ºF (ºC)		High Heat	40 - 70 (22 - 39)	40 - 70 (22 - 39)	40 - 70 (22 - 39)	40 - 70 (22 - 39)	40 - 70 (22 - 39)	40 - 70 (22 - 39)	40 - 70 (22 - 39)	40 - 70 (22 - 39)
		Low Heat	30 - 60 (17 - 33)	30 - 60 (17 - 33)	30 - 60 (17 - 33)	30 - 60 (17 - 33)	30 - 60 (17 - 33)	30 - 60 (17 - 33)	30 - 60 (17 - 33)	30 - 60 (17 - 33)

Airflow Capacity and Blower Data		**040-10**	**040-12**	**060-12**	**060-14**	**080-16**	**080-20**	**100-20**	**120-22**
Rated External Static Pressure (in. w.c.)	Heating	0.10	0.10	0.12	0.12	0.15	0.15	0.20	0.20
	Cooling	0.5	0.5	0.5	0.5	0.5	0.5	0.5	0.5
Airflow Delivery @ Rated ESP (CFM)	High Heat	815	860	1120	1135	1505	1555	1865	2375
	Low Heat	660	660	910	860	1160	1200	1435	1675
	Cooling	905	1065	1065	1475	1610	2005	2005	2115
Cooling Capacity (tons) @ 400, 350 CFM/ton	400 CFM/ton	2	2.5	2.5	3.5	4	5	5	5
	350 CFM/ton	2.5	3	3	4	4.5	5.5	5.5	6
Direct-Drive Motor Type		Electronically Communicated Motor (ECM)							
Direct-Drive Motor HP		1/2	1/2	1/2	3/4	3/4	1	1	1
Motor Full Load Amps—Default / Low Amp Kit†		6.8	6.8	6.8	10.1	10.1	13.9/10.4	13.9/10.4	13.9/10.4
RPM Range		600 - 1200							
Speed Selections		Variable (PWM)							
Blower Wheel Dia x Width	in.	11 x 7	11 x 8	11 x 7	11 x 8	11 x 8	11 x 10	11 x 10	11 x 11
Air Filtration System		Optional Media Cabinet Field Supplied Filter							
Filter Used for Certified Watt Data		KGAWF1506UFR							

Electrical Data		**040-10**	**040-12**	**060-12**	**060-14**	**080-16**	**080-20†**	**100-20†**	**120-22†**
Input Voltage	Volts-Hertz-Phase	115-60-1							
Operating Voltage Range	Min-Max	104-127							
Maximum Input Amps—Default / Low Amp Kit†	Amps	7.5	7.5	7.6	10.9	10.9	14.7/11.3	14.7/11.3	14.7/11.3
Unit Ampacity—Default / Low Amp Kit†	Amps	10.3	10.2	10.3	14.5	14.5	19.3/14.9	19.4/15.0	19.4/15.0
Minimum Wire Size—Default / Low Amp Kit†	AWG	14	14	14	14	14	12/14	12/14	12/14
Maximum Wire Length @ Minimum Wire Size—Default / Low Amp Kit†	Feet	36	36	36	25	25	29/24	29/24	29/24
	(M)	(11.0)	(11.0)	(11.0)	(7.6)	(7.6)	(8.8/7.3)	(8.8/7.3)	(8.8/7.3)
Maximum Fuse/Ckt Bkr (Time-Delay Type Recommended)—Default / Low Amp Kit†	Amps	15	15	15	15	15	20/15	20/15	20/15
Transformer Capacity (24vac output)		40 VA							
External Control Power Available	Heating	24.3 VA							
	Cooling	34.6 VA							

Controls		**040-10**	**040-12**	**060-12**	**060-14**	**080-16**	**080-20**	**100-20**	**120-22**
Gas Connection Size		1/2" - NPT							
Burners (Monoport)		2	2	3	3	4	4	5	6
Gas Valve (Redundant)	Manufacturer	White Rodgers							
Minimum Inlet Gas pressure (in. wc)		4.5							
Maximum Inlet Gas pressure (in. wc)		13.6							
Manufactured (Mobile) Home Kit		*not approved for MH use*							
Ignition Device		Silicon Nitride							
Limit Control		165	180	165	180	170	200	180	160
Heating Blower Control (Heating Off-Delay)		Adjustable: 90, 120, 150, 180 seconds							
Cooling Blower Control (Time Delay Relay)		90 seconds							
Communication System		None							
Thermostat Connections		R, W/W1, W2 Y/Y2, Y1, G, Com 24V, DHUM							
Accessory Connections		EAC (115vac); HUM (24vac); 1-stg AC (via Y/Y2)							

* See Accessory List for part numbers available.

† Low Amp Kit (KGAPC0101ECM) allows select furnaces to be installed with a 15 Amp Breaker and 14 AWG wire within the listed wire length.

ACCESSORIES

DESCRIPTION	PART NUMBER	040–10	040–12	060–12	060–14	080–16	080–20	100–20	120–22
Venting Accessories									
Vent Kit - Through the Cabinet	KGADC0101BVC	●	●	●	●	●	●	●	●
Vent Terminal - Concentric - 2” (51 mm)	KGAVT0701CVT	See Venting Tables							
Vent Terminal - Concentric - 3” (76 mm)	KGAVT0801CVT								
Vent Terminal Bracket - 2” (51 mm)	KGAVT0101BRA								
Vent Terminal Bracket - 3” (76 mm)	KGAVT0201BRA								
Vent Kit – Rubber Coupling	KGAAC0101RVC	See Venting Tables							
Condensate Drainage Accessories									
Freeze Protect Kit - Heat Tape	KGAHT0101CFP	●	●	●	●	●	●	●	●
CPVC to PVC Drain Adapters - 1/2” CPVC to 3/4” PVC	KGAAD0110PVC	●	●	●	●	●	●	●	●
Horizontal Trap Grommet - Direct Vent	KGACK0101HCK	All DV Horizontal							
Condensate Neutralizer Kit	P908–0001	●	●	●	●	●	●	●	●
External Trap Kit	KGAET0201ETK	●	●	●	●	●	●	●	●
Ductwork Adapter Accessories									
Furnace Base Kit for Combustible Floors	KGASB0201ALL	●	●	●	●	●	●	●	●
Coil Adapter Kits – No Offset	KGADA0101ALL	●	●	●	●	●	●	●	●
Coil Adapter Kits – Single Offset	KGADA0201ALL	●	●	●	●	●	●	●	●
Coil Adapter Kits – Double Offset	KGADA0301ALL	●	●	●	●	●	●	●	●
Return Air Base (Upflow Applications) 14.0–in. wide	KGARP0301B14	●	●						
Return Air Base (Upflow Applications) 17.5–in. wide	KGARP0301B17			●	●	●			
Return Air Base (Upflow Applications) 21.0–in. wide	KGARP0301B21						●	●	
Return Air Base (Upflow Applications) 24.5–in. wide	KGARP0301B24								●
IAQ Device Duct Adapters 20.0–in. IAQ to 16 in. Side Return	KGAAD0101MEC	20”x25” IAQ Devices							
IAQ Device Duct Adapters 24.0–in. IAQ to 16 in. Side Return	KGAAD0201MEC	24”x25” IAQ Devices							
Gas Conversion Accessories									
Gas Conversion Kit - Nat to LP; Var-speed Products	KGCNP5201VSP	●	●	●	●	●	●	●	●
Gas Conversion Kit - LP to Nat; Var-speed Products	KGCPN4401VSP	●	●	●	●	●	●	●	●
Gas Orifice Kit - #42 (Nat Gas)	LH32DB207	●	●	●	●	●	●	●	●
Gas Orifice Kit - #43 (Nat Gas)	LH32DB202	●	●	●	●	●	●	●	●
Gas Orifice Kit - #44 (Nat Gas)	LH32DB200	●	●	●	●	●	●	●	●
Gas Orifice Kit - #45 (Nat Gas)	LH32DB205	●	●	●	●	●	●	●	●
Gas Orifice Kit - #46 (Nat Gas)	LH32DB208	●	●	●	●	●	●	●	●
Gas Orifice Kit - #47 (Nat Gas)	LH32DB078	●	●	●	●	●	●	●	●
Gas Orifice Kit - #48 (Nat Gas)	LH32DB076	●	●	●	●	●	●	●	●
Gas Orifice Kit - #54 (LP)	LH32DB203	●	●	●	●	●	●	●	●
Gas Orifice Kit - #55 (LP)	LH32DB201	●	●	●	●	●	●	●	●
Gas Orifice Kit - #56 (LP)	LH32DB206	●	●	●	●	●	●	●	●
Gas Orifice Kit - 1.25mm (LP)	LH32DB209	●	●	●	●	●	●	●	●
Gas Orifice Kit - 1.30mm (LP)	LH32DB210	●	●	●	●	●	●	●	●
Control Accessories									
Performance® Series Edge® Thermostat	T6–PRH01–A	●	●	●	●	●	●	●	●
Twinning Kit	KGATW0801HSI				●	●		●	●
IAQ Accessories									
Filter Pack (6 pack) – Washable - 16x25x1 (406x635x25 mm)	KGAWF1306UFR	●	●	●	●	●	●	●	●
Filter Pack (6 pack) – Washable - 24x25x1 (610x635x25 mm)	KGAWF1506UFR	●	●	●	●	●	●	●	●
EZ-Flex Filter - 16” (406 mm)	EXPXXFIL0016	Use with EZXCAB–1016							
EZ-Flex Filter - 20” (508 mm)	EXPXXFIL0020	Use with EZXCAB–1020							
EZ-Flex Filter - 24” (610 mm)	EXPXXFIL0024	Use with EZXCAB–1024							
EZ-Flex Filter with End Caps - 16” (406 mm)	EXPXXUNV0016	Use with EZXCAB–1016							
EZ-Flex Filter with End Caps - 20” (508 mm)	EXPXXUNV0020	Use with EZXCAB–1020							
EZ-Flex Filter with End Caps - 24” (610 mm)	EXPXXUNV0024	Use with EZXCAB–1024							
Cartridge Media Filter - 16” (406 mm)	FILXXCAR0016	Use with FILCABXL–1016							
Cartridge Media Filter - 20” (508 mm)	FILXXCAR0020	Use with FILCABXL–1020							
Cartridge Media Filter - 24” (610 mm)	FILXXCAR0024	Use with FILCABXL–1024							
Carrier Infinity Air Purifier - 16x25 (406x635 mm)	GAPAAXCC1625-A08	Up to 1600 CFM							
Carrier Infinity Air Purifier - 20x25 (508x635 mm)	GAPAAXCC2025-A08	Up to 2000 CFM							
Carrier Infinity Air Purifier Repl. Filter- 16x25 (406x635 mm)	GAPACCCAR1625-A05	Use with GAPAAXCC1625							
Carrier Infinity Air Purifier Repl. Filter- 20x25 (508x635 mm)	GAPACCCAR2025-A05	Use with GAPAAXCC2025							
Carrier Performance Air Purifier - 16x25 (508x635 mm)	PGAPXX1625	Up to 1600 CFM							
Carrier Performance Air Purifier - 20x25 (508x635 mm)	PGAPXX2025	Up to 2000 CFM							
Carrier Performance Air Purifier Repl Filter - 16x25 (406x635 mm)	PGAPAXXCAR1625	Use with PGAPXX1625							
Carrier Performance Air Purifier Repl. Filter - 20x25 (508x635 mm)	PGAPAXXCAR2025	Use with PGAPXX2025							
Other									
Lower Amp Kit	KGAPC0101ECM						●	●	●

● = Used with the model furnace

59TP6A

AIR DELIVERY - CFM

(SW1-5 and SW2–2 set to OFF, except as indicated. See notes 1 and 2)													
Unit Size	Cooling Switch Settings			External Static Pressure (ESP)									
	SW2-8	SW2-7	SW2-6	0.1	0.2	0.3	0.4	0.5	0.6	0.7	0.8	0.9	1.030
040–10													
Clg Default:	OFF	OFF	OFF	1125	1080	1020	970	905	855	805	755	700	635
Cooling (SW2)	OFF	OFF	ON	615	555	510	475	440	395	355	270	230	note 8
	OFF	ON	OFF	785	740	695	665	630	590	565	520	485	450
	OFF	ON	ON	990	950	910	875	850	815	770	720	670	615
	ON	OFF	OFF	1125	1080	1020	970	905	855	805	755	700	635
	ON	OFF	ON	1125	1080	1020	970	905	855	805	755	700	635
	ON	ON	OFF	1125	1080	1020	970	905	855	805	755	700	635
	ON	ON	ON	1125	1080	1020	970	905	855	805	755	700	635
Clg SW2:	Maximum Clg Airflow [2]			1125	1080	1020	970	905	855	805	755	700	635
Heating (SW1)	High Heat Airflow [3]			815	770	725	695	660	625	595	550	510	475
	Low Heat Airflow [3]			660	605	560	530	495	450	415	340	300	Note 7
040–12													
Clg Default:	OFF	OFF	OFF	1250	1210	1165	1115	1065	1015	965	915	860	810
Cooling (SW2)	OFF	OFF	ON	575	540	490	435	385	See note 4				
	OFF	ON	OFF	770	725	685	640	600	560	515	480	See note 4	
	OFF	ON	ON	945	910	875	835	800	770	735	695	665	635
	ON	OFF	OFF	1140	1105	1075	1040	1005	970	930	885	835	790
	ON	OFF	ON	1250	1210	1165	1115	1065	1015	965	915	860	810
	ON	ON	OFF	1250	1210	1165	1115	1065	1015	965	915	860	810
	ON	ON	ON	1250	1210	1165	1115	1065	1015	965	915	860	810
Clg SW2:	Maximum Clg Airflow [2]			1250	1210	1165	1115	1065	1015	965	915	860	810
Heating (SW1)	High Heat Airflow [3]			860	825	785	745	705	670	630	595	565	525
	Low Heat Airflow [3]			650	595	545	500	460	415	365	320	275	note 7
060–12													
Clg Default:	OFF	OFF	OFF	1250	1210	1165	1115	1065	1015	955	895	815	745
Cooling (SW2)	OFF	OFF	ON	605	565	510	455	420	See note 4				
	OFF	ON	OFF	785	750	705	675	630	585	See note 4			
	OFF	ON	ON	955	920	895	860	825	785	755	720	685	650
	ON	OFF	OFF	1135	1110	1080	1055	1020	990	935	880	825	745
	ON	OFF	ON	1250	1210	1165	1115	1065	1015	955	895	815	745
	ON	ON	OFF	1250	1210	1165	1115	1065	1015	955	895	815	745
	ON	ON	ON	1250	1210	1165	1115	1065	1015	955	895	815	745
Clg SW2:	Maximum Clg Airflow [2]			1250	1210	1165	1115	1065	1015	955	895	815	745
Heating (SW1)	High Heat Airflow [3]			1125	1100	1070	1045	1010	980	925	875	820	740
	Low Heat Airflow [3]			900	865	835	800	760	720	690	650	610	580

59TP6A

AIR DELIVERY - CFM (CONTINUED)

Unit Size	Cooling Switch Settings			External Static Pressure (ESP)									
	SW2-8	SW2-7	SW2-6	0.1	0.2	0.3	0.4	0.5	0.6	0.7	0.8	0.9	1.0
060–14													
Clg Default:	OFF	OFF	OFF	1330	1295	1260	1220	1190	1150	1110	1075	1045	1005
Cooling (SW2)	OFF	OFF	ON	725	600	435	280	210	See note 4				
	OFF	ON	OFF	780	725	660	615	540	See note 4				
	OFF	ON	ON	975	925	875	835	785	750	690	655	610	570
	ON	OFF	OFF	1160	1120	1090	1045	1010	970	920	885	840	800
	ON	OFF	ON	1330	1295	1260	1220	1190	1150	1110	1075	1045	1005
	ON	ON	OFF	1705	1650	1595	1545	1475	1415	1340	1275	1200	1105
	ON	ON	ON	1705	1650	1595	1545	1475	1415	1340	1275	1200	1105
Clg SW2:	Maximum Clg Airflow [2]			1705	1650	1595	1545	1475	1415	1340	1275	1200	1105
Heating (SW1)	High Heat Airflow [3]			1145	1105	1075	1030	995	955	905	870	825	785
	Low Heat Airflow [3]			870	820	760	720	655	620	560	525	470	435
080–16													
Clg Default:	OFF	OFF	OFF	1805	1765	1720	1665	1610	1540	1475	1400	1315	1235
Cooling (SW2)	OFF	OFF	ON	775	635	455	230	See note 8					
	OFF	ON	OFF	840	740	675	625	555	See note 4				
	OFF	ON	ON	995	955	910	860	815	770	720	660	620	585
	ON	OFF	OFF	1175	1140	1090	1060	1025	980	940	905	855	815
	ON	OFF	ON	1325	1280	1245	1210	1180	1140	1105	1070	1025	990
	ON	ON	OFF	1545	1515	1480	1445	1410	1380	1350	1315	1245	1175
	ON	ON	ON	1805	1765	1720	1665	1610	1540	1475	1400	1315	1235
Clg SW2:	Maximum Clg Airflow [2]			1805	1765	1720	1665	1610	1540	1475	1400	1315	1235
Heating (SW1)	High Heat Airflow [3]			1520	1490	1455	1420	1385	1355	1320	1285	1220	1155
	Low Heat Airflow [3]			1180	1145	1095	1065	1030	985	945	910	860	820
080-20													
Clg Default:	OFF	OFF	OFF	1905	1870	1825	1785	1750	1700	1665	1625	1560	1460
Cooling (SW2)	OFF	OFF	ON	950	770	620	515	440	365	See note 4			
	OFF	ON	OFF	1015	935	880	825	765	690	625	580	See note 4	
	OFF	ON	ON	1155	1105	1040	990	920	875	815	755	710	645
	ON	OFF	OFF	1335	1290	1245	1190	1145	1085	1040	990	930	890
	ON	OFF	ON	1520	1485	1435	1390	1340	1300	1255	1200	1160	1115
	ON	ON	OFF	1905	1870	1825	1785	1750	1700	1665	1625	1560	1460
	ON	ON	ON	2290	2230	2160	2085	2005	1915	1820	1730	1640	1525
Clg SW2:	Maximum Clg Airflow [2]			2290	2230	2160	2085	2005	1915	1820	1730	1640	1525
Heating (SW1)	High Heat Airflow [3]			1575	1535	1485	1445	1400	1350	1310	1260	1215	1170
	Low Heat Airflow [3]			1230	1170	1125	1065	1015	955	900	855	795	755

NOTE: See notes at end of table.

AIR DELIVERY - CFM (CONTINUED)

Unit Size	Cooling Switch Settings			External Static Pressure (ESP)									
	SW2-8	SW2-7	SW2-6	0.1	0.2	0.3	0.4	0.5	0.6	0.7	0.8	0.9	1.0
100-20													
Clg Default:	OFF	OFF	OFF	1890	1845	1800	1755	1700	1655	1610	1560	1510	1460
Cooling (SW2)	OFF	OFF	ON	1015	825	630	485	405	325	See note 4			
	OFF	ON	OFF	1080	895	815	740	690	615	555	475	See note 4	
	OFF	ON	ON	1155	1080	1020	940	890	825	785	710	660	590
	ON	OFF	OFF	1310	1260	1195	1140	1075	1025	970	925	875	810
	ON	OFF	ON	1520	1475	1425	1365	1315	1255	1210	1155	1110	1055
	ON	ON	OFF	1890	1845	1800	1755	1700	1655	1610	1560	1510	1460
	ON	ON	ON	2290	2230	2160	2085	2005	1915	1820	1730	1640	1525
Clg SW2:	Maximum Clg Airflow [2]			2290	2230	2160	2085	2005	1915	1820	1730	1640	1525
Heating (SW1)	High Heat Airflow [3]			1905	1865	1825	1775	1730	1685	1640	1590	1545	1490
	Low Heat Airflow [3]			1480	1435	1375	1330	1265	1215	1160	1115	1060	1005
120-22													
Clg Default:	OFF	OFF	OFF	2010	1960	1910	1850	1800	1750	1690	1645	1565	1480
Cooling (SW2)	OFF	OFF	ON	1015	805	645	550	480	See note 4				
	OFF	ON	OFF	1075	975	915	835	765	See note 4				
	OFF	ON	ON	1205	1135	1055	1000	935	See note 4				
	ON	OFF	OFF	1400	1330	1260	1190	1145	1080	1035	970	905	845
	ON	OFF	ON	1615	1550	1500	1435	1370	1325	1265	1215	1160	1110
	ON	ON	OFF	2010	1960	1910	1850	1800	1750	1690	1645	1565	1480
	ON	ON	ON	note 8	2375	2300	2205	2115	2010	1890	1750	1645	1550
Clg SW2:	Maximum Clg Airflow [2]			note 8	2375	2300	2205	2115	2010	1890	1750	1645	1550
Heating (SW1)	High Heat Airflow [3]			note 8	2375	2300	2205	2115	2010	1890	1750	1645	1550
	Low Heat Airflow [3]			1735	1675	1625	1560	1500	1455	1395	1345	1285	1225

1. Nominal 350 CFM/ton cooling airflow is delivered with SW1−5 and SW2−2 set to OFF.
   Set both SW1−5 and SW2−2 to ON for +7% airflow (nominal 370 CFM/ton).
   Set SW1−5 to ON and SW2−2 to OFF for +15% airflow (nominal 400 CFM/ton).
   Set SW2−2 to ON and SW1−5 to OFF for −7% airflow (nominal 325 CFM/ton).
   The above adjustments in airflow are subject to motor horsepower range/capacity.
2. Maximum cooling airflow is achieved when switches SW2−6, SW2−7, SW2−8 and SW1−5 are set to ON, and SW2−2 is set to OFF.
3. All heating CFM's are when low heat rise adjustment switch (SW1−3) and comfort/efficiency adjustment switch (SW1−4) are both set to OFF.
4. Ductwork must be sized for high−heating CFM within the operational range of ESP. Operation within the blank areas of the chart is not recommended because high−heat operation will be above 1.0 ESP.
5. All airflows of 1880 CFM or less on 21" and 24.5" casing size furnaces are 5% less on side return only installations.
6. Return air above 1800 CFM on 24.5" casing requires two sides, one side and bottom, or bottom only to allow sufficient airflow to the furnace.
7. For upflow applications, air entering from one side into both the side of the furnace and a return air base counts as a side and bottom return.
8. Airflow not stable at this ESP.

MAXIMUM ALLOWABLE EXPOSED VENT LENGTH

Table 1 – Maximum Allowable Exposed Vent Lengths in Unconditioned Space Insulation Table - Ft.

Winter Design Temp °F	Unit Size	40,000* BTUH									60,000 BTUH											
		Uninsulated			3/8-in. Insulation			1/2-in. Insulation			Uninsulated				3/8-in. Insulation				1/2-in. Insulation			
	Pipe Dia. in.	1 ½	2	2 ½	1 ½	2	2 ½	1 ½	2	2 ½	1 ½	2	2 ½	3	1 ½	2	2 ½	3	1 ½	2	2 ½	3
	20	20	20	20	20	50	45	20	60	50	20	30	30	25	20	75	65	60	20	85	75	65
	0	10	5	5	20	25	20	20	30	25	15	15	10	10	20	40	30	25	20	45	40	30
	-20	5			20	15	10	20	20	15	10	5			20	25	20	15	20	30	25	20
	-40				15	10	5	15	15	10	5				20	15	15	10	20	20	15	10

Winter Design Temp °F	Unit Size	80,000 BTUH														
		Uninsulated					3/8-in. Insulation					1/2-in. Insulation				
	Pipe Dia. in.	1 ½	2	2 ½	3	4	1 ½	2	2 ½	3	4	1 ½	2	2 ½	3	4
	20	15	40	40	35	30	15	50	90	75	65	15	50	70	70	70
	0	15	20	15	10	5	15	50	45	35	30	15	50	50	40	35
	-20	15	10	5			15	35	30	20	15	15	40	30	25	15
	-40	10	5				15	25	20	15	5	15	30	25	20	10

Winter Design Temp °F	Unit Size	100,000 BTUH											
		Uninsulated				3/8-in. Insulation				1/2-in. Insulation			
	Pipe Dia. in.	2	2 ½	3	4	2	2 ½	3	4	2	2 ½	3	4
	20	20	50	40	35	20	80	95	80	20	80	105	90
	0	20	20	15	10	20	55	45	35	20	65	55	45
	-20	15	10	5		20	35	30	20	20	45	35	25
	-40	10	5			20	25	20	10	20	30	25	15

Winter Design Temp °F	Unit Size	120,000 BTUH									140,000 BTUH								
		Uninsulated			3/8-in. Insulation			1/2-in. Insulation			Uninsulated			3/8-in. Insulation			1/2-in. Insulation		
	Pipe Dia. in.	2 ½	3	4	2 ½	3	4	2 ½	3	4	2 ½	3	4	2 ½	3	4	2 ½	3	4
	20	10	50	40	10	75	95	10	75	105	5	55	50	5	65	105	5	65	125
	0	10	20	15	10	55	45	10	65	50	5	25	15	5	65	50	5	65	60
	-20	10	10		10	35	25	10	45	30	5	10	5	5	45	30	5	50	40
	-40	10	5		10	25	15	10	30	20	5	5		5	30	20	5	35	25

Maximum Allowable Exposed Vent Length in Unconditioned Space - Meters

Winter Design Temp °C	Unit Size	40,000* BTUH									60,000 BTUH											
		Uninsulated			3/8-in. Insulation			1/2-in. Insulation			Uninsulated				3/8-in. Insulation				1/2-in. Insulation			
	Pipe Dia. mm	38	51	64	38	51	64	38	51	64	38	51	64	76	38	51	64	76	38	51	64	76
	-7	6.1	6.1	6.1	6.1	15.2	13.7	6.1	18.3	15.2	6.1	9.1	9.1	7.6	6.1	22.9	19.8	18.3	6.1	25.9	22.9	19.8
	-18	3.0	1.5	1.5	6.1	7.6	6.1	6.1	9.1	7.6	4.6	4.6	3.0	3.0	6.1	12.2	9.1	7.6	6.1	13.7	12.2	9.1
	-29	1.5			6.1	4.6	3.0	6.1	6.1	4.6	3.0	1.5			6.1	7.6	6.1	4.6	6.1	9.1	7.6	6.1
	-40				4.6	3.0	1.5	4.6	4.6	3.0	1.5				6.1	4.6	4.6	3.0	6.1	6.1	4.6	3.0

Winter Design Temp °C	Unit Size	80,000 BTUH														
		Uninsulated					3/8-in. Insulation					1/2-in. Insulation				
	Pipe Dia. mm	38	51	64	76	102	38	51	64	76	102	38	51	64	76	102
	-7	4.6	12.2	12.2	10.7	9.1	4.6	15.2	27.4	22.9	19.8	4.6	15.2	21.3	21.3	21.3
	-18	4.6	6.1	4.6	3.0	1.5	4.6	15.2	13.7	10.7	9.1	4.6	15.2	15.2	12.2	10.7
	-29	4.6	3.0	1.5			4.6	10.7	9.1	6.1	4.6	4.6	12.2	9.1	7.6	4.6
	-40	3.0	1.5				4.6	7.6	6.1	4.6	1.5	4.6	9.1	7.6	6.1	3.0

Winter Design Temp °C	Unit Size	100,000 BTUH											
		Uninsulated				3/8-in. Insulation				1/2-in. Insulation			
	Pipe Dia. mm	51	64	76	102	51	64	76	102	51	64	76	102
	-7	6.1	15.2	12.2	10.7	6.1	24.4	28.9	24.4	6.1	24.4	32.0	27.4
	-18	6.1	6.1	4.6	3.0	6.1	16.8	13.7	10.7	6.1	19.8	16.7	13.7
	-29	4.6	3.0	1.5		6.1	10.7	9.1	6.1	6.1	13.7	10.7	7.6
	-40	3.0	1.5			6.1	7.6	6.1	3.0	6.1	9.1	7.6	4.6

Winter Design Temp °C	Unit Size	120,000 BTUH									140,000 BTUH								
		Uninsulated			3/8-in. Insulation			1/2-in. Insulation			Uninsulated			3/8-in. Insulation			1/2-in. Insulation		
	Pipe Dia. mm	64	76	102	64	76	102	64	76	102	64	76	102	64	76	102	64	76	102
	-7	3.0	15.2	12.2	3.0	22.9	28.9	3.0	22.9	32.0	1.5	16.7	15.2	1.5	19.8	32.0	1.5	19.8	38.1
	-18	3.0	6.1	4.6	3.0	16.8	13.7	3.0	19.8	15.2	1.5	7.6	4.6	1.5	19.8	15.2	1.5	19.8	18.3
	-29	3.0	3.0		3.0	10.7	7.6	3.0	13.7	9.1	1.5	3.0	1.5	1.5	13.7	9.1	1.5	15.2	12.2
	-40	3.0	1.5		3.0	7.6	4.6	3.0	9.1	6.1	1.5	1.5		1.5	9.1	6.1	1.5	35	7.6

* Pipe length (ft) specified for maximum pipe lengths located in unconditioned spaces. Pipes located in unconditioned space cannot exceed total allowable pipe length calculated from Table 2.

† Insulation thickness based on R value of 3.5 per in.

MAXIMUM EQUIVALENT VENT LENGTH - FT. (M)

NOTE: Maximum Equivalent Vent Length (MEVL) includes standard and concentric vent termination and does NOT include elbows. Use Table 3 - Deductions from Maximum Equivalent Vent Length to determine allowable vent length for each application.

Table 2 – Maximum Equivalent Vent Length - Ft.

Unit Size		40,000 [1]			60,000 [2]				80,000					100,000 [3]				120,000		
Altitude (feet)	Pipe Dia. (in)	1 ½	2	2 ½	1 ½	2	2 ½	3	1 ½	2	2 ½	3	4	2	2 ½	3	4	2 ½	3	4
	0 – 2000	40	155	185	20	100	175	200	15	55	130	175	200	20	80	175	200	10	75	185
	2001 – 3000	35	150	175		95	165	185	10	49	125	165	185	15	75	165	185		70	175
	3001 – 4000	30	135	160	16	90	155	175			115	155	175			155	175	5	65	165
	4001 – 4500	25	130	155	15	85	150	170		44	110	150	165	10	70		170	N/A	60	160
	4501 – 5000		125	145		80	145	165				145	160		65	150	165			
	5001 – 6000	20	120	130		75	140	155		41	100	135	150			140	155			155
	6001 – 7000	15	110	120	13	70	130	145	N/A	38	90	125	140		60	135	145		50	140
	7001 – 8000	10	100	110	10	65	120	135		36		120	125	N/A	55	125	135		46	130
	8001 – 9000		90	95	5	60	115	125		33	80	110	115		50	115	125		43	120
	9001 – 10000	5	80	85	N/A	55	105	115		30	75	100	105		45	100	115		39	115
Maximum Equivalent Vent Length – Meters																				
Unit Size		40,000 [1]			60,000 [2]				80,000					100,000 [3]				120,000		
Altitude (meters)	Pipe Dia. (mm)	38	51	64	38	51	64	76	38	51	64	76	102	51	64	76	102	64	76	102
	0 – 610	12.1	47.2	56.3	6.0	30.4	53.3	60.9	4.5	16.7	39.6	53.3	60.9	6.0	24.3	53.3	60.9	3.0	22.8	56.3
	611 – 914	10.6	45.7	53.3		28.9	50.2	56.3	3.0	14.9	38.1	50.2	56.3	4.5	22.8	50.2	56.3		21.3	53.3
	915 – 1219	9.1	41.1	48.7	4.8	27.4	47.2	53.3			35.0	47.2	53.3			47.2	53.3	1.5	19.8	50.2
	1220 – 1370	7.6	39.6	47.2	4.5	25.9	45.7	51.8		13.4	33.5	45.7	50.2	3.0	21.3		51.8	N/A	18.2	48.7
	1371 – 1524		38.1	44.1		24.3	44.1	50.2				44.1	48.7		19.8	45.7	50.2			
	1525 – 1829	6.0	36.5	39.6		22.8	42.6	47.2		12.4	30.4	41.1	45.7			42.6	47.2			47.2
	1830 – 2134	4.5	33.5	36.5	3.9	21.3	39.6	44.1	NA	11.5	27.4	38.1	42.6		18.2	41.1	44.1		15.2	42.6
	2135 – 2438	3.0	30.4	33.5	3.0	19.8	36.5	41.1		10.9		36.5	38.1	NA	16.7	38.1	41.1		14.0	39.6
	2439 – 2743		27.4	28.9	1.5	18.2	35.0	38.1		10.0	24.3	33.5	35.0		15.2	35.0	38.1		13.1	36.5
	2744 – 3048	1.5	24.3	25.9	NA	16.7	32.0	35.0		9.1	22.8	30.4	32.0		13.7	30.4	35.0		11.8	35.0

1. Inducer Outlet Restrictor disk (P/N 337683 – 401; 1.25 – in. (32 mm) Dia.) shipped in the loose parts bag or available through Replacement Components required under 10 – ft. (3 M) TEVL in all orientations. Required for installations from 0 – 2000 (0 to 610 M) above sea level. Failure to use an outlet restrictor may result in flame disturbances or flame sense lock – out.
2. Inducer Outlet Restrictor disk (P/N 337683 – 401; 1.25 – in. (32 mm) Dia.) available through Replacement Components required for no greater than 5 – ft. (1.5 M) TEVL in downflow and horizontal orientations only. Required for installations from 0 – 2000 (0 to 610 M) above sea level.
3. Inducer Outlet Restrictor disk (P/N 337683 – 402; 1.50 – in. (38 mm) Dia.) available through Replacement Components required for no greater than 5 – ft. (1.5 M) TEVL in downflow and horizontal orientations only. Required for installations from 0 – 2000 (0 to 610 M) above sea level.

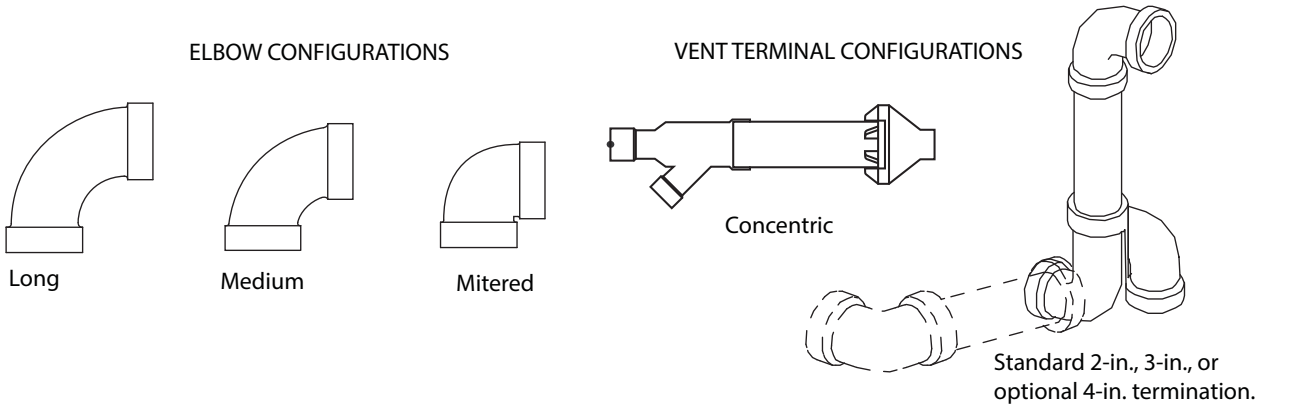

A13110

Table 3 – Deductions from Maximum Equivalent Vent Length - Ft. (M)

Pipe Diameter (in):	1-1/2		2		2-1/2		3		4	
Mitered 90° Elbow	8	(2.4)	8	(2.4)	8	(2.4)	8	(2.4)	8	(2.4)
Medium Radius 90° Elbow	5	(1.5)	5	(1.5)	5	(1.5)	5	(1.5)	5	(1.5)
Long Radius 90° Elbow	3	(0.9)	3	(0.9)	3	(0.9)	3	(0.9)	3	(0.9)
Mitered 45° Elbow	4	(1.2)	4	(1.2)	4	(1.2)	4	(1.2)	4	(1.2)
Medium Radius 45° Elbow	2.5	(0.8)	2.5	(0.8)	2.5	(0.8)	2.5	(0.8)	2.5	(0.8)
Long Radius 45° Elbow	1.5	(0.5)	1.5	(0.5)	1.5	(0.5)	1.5	(0.5)	1.5	(0.5)
Tee	16	(4.9)	16	(4.9)	16	(4.9)	16	(4.9)	16	(4.9)
Concentric Vent Termination	NA		0	(0.0)	NA		0	(0.0)	NA	
Standard Vent Termination	0	(0.0)	0	(0.0)	0	(0.0)	0	(0.0)	0	(0.0)

NOTES:
1. Use only the smallest diameter pipe possible for venting. Over – sizing may cause flame disturbance or excessive vent terminal icing or freeze – up.
2. NA – Not allowed. Pressure switch will not close, or flame disturbance may result.
3. Not all furnace families include 140,000 BTUH input models.
4. Vent sizing for Canadian installations over 4500 ft (1370 M) above sea level are subject to acceptance by local authorities having jurisdiction.
5. Size both the combustion air and vent pipe independently, then use the larger size for both pipes.
6. Assume the two 45° elbows equal one 90° elbow. Wide radius elbows are desirable and may be required in some cases.
7. Elbow and pipe sections within the furnace casing and at the vent termination should not be included in vent length or elbow count.
8. The minimum pipe length is 5 ft. (2 M) linear feet (meters) for all applications.
9. Use 3 – in. (76 mm) diameter vent termination kit for installations requiring 4 – in. (102 mm) diameter pipe.

Venting System Length Calculations

The Total Equivalent Vent Length (TEVL) for **EACH** combustion air or vent pipe equals the length of the venting system, plus the equivalent length of elbows used in the venting system from Table **3**.

Standard vent terminations or factory accessory concentric vent terminations count for zero deduction.

See vent system manufacturer's data for equivalent lengths of flexible vent pipe or other termination systems. **DO NOT ASSUME** that one foot of flexible vent pipe equals one foot of straight PVC/ABS DWV vent pipe.

Compare the Total Equivalent Vent Length to the Maximum Equivalent Vent Lengths in Table 2.

Example 1

A direct-vent 60,000 BTUH furnace installed at 2100 ft. (640M). Venting system includes **FOR EACH PIPE:**
70 feet (22 M) of vent pipe, 65 feet (20 M) of combustion air inlet pipe, (3) 90º long-radius elbows, (2) 45º long-radius elbows, and a factory accessory concentric vent kit.

Can this application use 2" (50 mm ND) PVC/ABS DWV vent piping?

Measure the required linear length of air inlet and vent pipe; insert the longest of the two here					70 ft. (22 M)	Use length of the longer of the vent or air inlet piping system
Add equiv length of (3) 90º long-radius elbows (use the highest number of elbows for either the vent or inlet pipe)	3	x	3 ft. (0.9 M)	=	9 ft. (2.7 M)	From Table 3.
Add equiv length of (2) 45º long-radius elbows (use the highest number of elbows for either the vent or inlet pipe)	2	x	1.5 ft. (0.5 M)	=	3 ft. (0.9 M)	From Table 3.
Add equiv length of factory concentric vent term					0 ft.	From Table 3.
Add correction for flexible vent pipe, if any					0 ft.	From Vent Manufacturer's instructions; zero for PVC/ABS DWV
Total Equivalent Vent Length (TEVL)					82 ft. (25 M)	Add all of the above lines
Maximum Equivalent Vent Length (MEVL)					95 ft. (29 M)	For 2" pipe from Table 2
Is TEVL less than MEVL?					**YES**	**Therefore, 2" pipe MAY be used**

Example 2

A direct-vent 60,000 BTUH furnace installed at 2100 ft. (640M). Venting system includes **FOR EACH PIPE:**
100 feet (30 M) of vent pipe, 95 feet (29 M) of combustion air inlet pipe, (3) 90º long-radius elbows, and a polypropylene concentric vent kit. Also includes 20 feet (6.1 M) of flexible polypropylene vent pipe, included within the 100 feet (30 M) of vent pipe.

VERIFY FROM POLYPROPYLENE VENT MANUFACTURER'S INSTRUCTIONS for the multiplier correction for flexible vent pipe.

Can this application use 60mm o.d. (2") polypropylene vent piping? If not, what size piping can be used?

Measure the required linear length of **RIGID** air inlet and vent pipe; insert the longest of the two here: 100 ft. Of rigid pipe – 20 ft. Of flexible pipe				=	80 ft. (24 M)	Use length of the longer of the vent or air inlet piping system
Add equiv length of (3) 90º long-radius elbows (use the highest number of elbows for either the vent or inlet pipe)	3	x	5 ft. (1.5 M)	=	15 ft. (4.6 M)	Example from polypropylene vent manufacturer's instructions, Verify from vent manufacturer's instructions.
Add equiv length of 45º long-radius elbows (use the highest number of elbows for either the vent or inlet pipe)	0	x		=	0 ft. (0 M)	
Add equiv length of factory concentric vent term	9	x	3.3 ft (0.9 M)	=	30 ft. (9 M)	
Add correction for flexible vent pipe, if any	2*	x	20 ft. (6.1 M)	=	36 ft. (11 M)	
* VERIFY FROM VENT MANUFACTURER'S INSTRUCTIONS; For example only, assume 1 meter of flexible 60mm (2") or 80mm (3") polypropylene pipe equals 2.0 meters (6.5 ft.) of PVC/ABS pipe.						
Total Equivalent Vent Length (TEVL)					165 ft. (50 M)	Add all of the above lines
Maximum Equivalent Vent Length (MEVL)					95 ft. (29 M)	For 2" pipe from Table 2
Is TEVL less than MEVL?					**NO**	**Therefore, 60mm (2") pipe may NOT be used; try 80mm (3")**
Maximum Equivalent Vent Length (MEVL)					185 ft. (57 M)	For 3" pipe from Table 2
Is TEVL less than MEVL?					**YES**	**Therefore, 80mm (3") pipe MAY be used**

RETURN AIR TEMPERATURE

This furnace is designed for continuous return-air minimum temperature of 60°F (15°C) db or intermittent operation down to 55°F (13°C) db such as when used with a night setback thermometer. Return-air temperature must not exceed 80°F (27°C) db. Failure to follow these return air limits may affect reliability of heat exchangers, motors and controls.

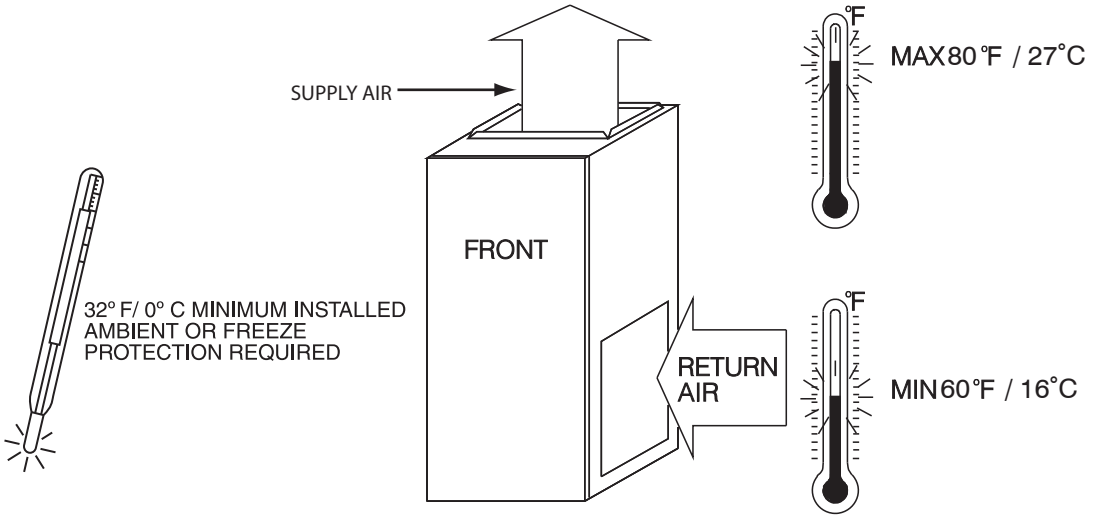

A10490

MINIMUM CLEARANCES TO COMBUSTIBLE MATERIALS

POSITION	CLEARANCE
Rear	0 (0 mm)
Front (Combustion air openings in furnace and in structure)	1 in. (25 mm)
Required for service**	24 in. (610 mm)*
All Sides of Supply Plenum**	1 in. (25 mm)
Sides	0 (0 mm)
Vent	0 (0 mm)
Top of Furnace	1 in. (25 mm)

* Recommended
**Consult your local building codes

COMBUSTION-AIR PIPE FOR NON-DIRECT (1-PIPE) VENT APPLICATION

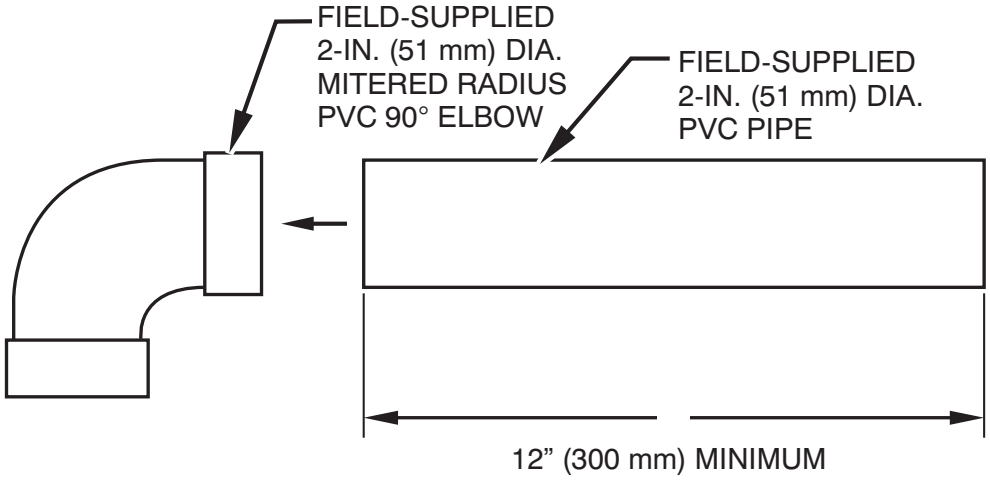

A12376

NOTE: See Installation Instructions for specific venting configurations.

DOWNFLOW SUBBASE

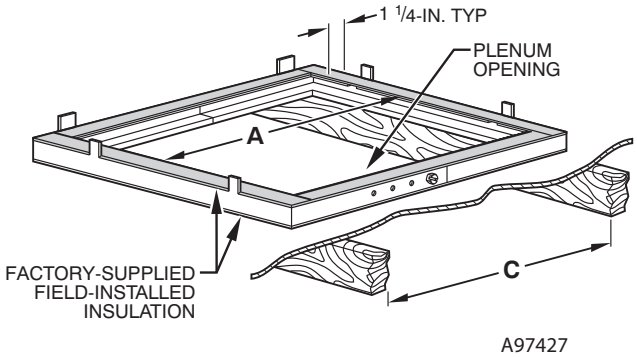

Assembled

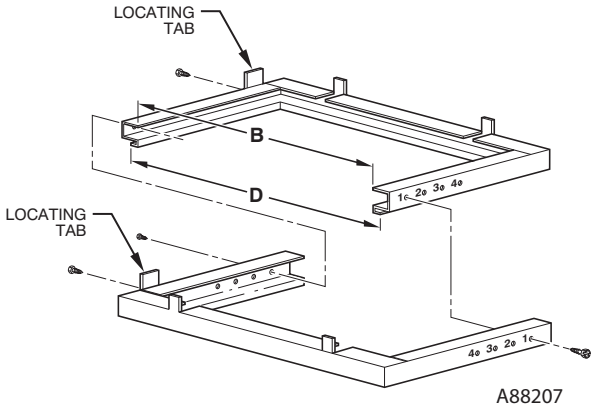

Disassembled

59TP6A

DIMENSIONS (IN. / MM)						
FURNACE CASING WIDTH	FURNACE IN DOWNFLOW APPLICATION	PLENUM OPENING*		FLOOR OPENING		HOLE NO. FOR WIDTH ADJUSTMENT
		A	B	C	D	
14–3/16 (360)	Furnace with or without Cased Coil Assembly or Coil Box	11–3/16 (322)	19 (483)	13–7/16 (341)	20–5/8 (600)	4
17–1/2 (445)	Furnace with or without Cased Coil Assembly or Coil Box	15–1/8 (384)	19 (483)	16–3/4 (426)	20–5/8 (600)	3
21 (533)	Furnace with or without Cased Coil Assembly or Coil Box	18–5/8 (396)	19 (483)	20–1/4 (514)	20–5/8 (600)	2
24–1/2 (622)	Furnace with or without Cased Coil Assembly or Coil Box	22–1/8 (562)	19 (483)	23–3/4 (603)	20–5/8 (600)	1

*The plenum should be constructed 1/4–in. (6 mm) smaller in width and depth than the plenum dimensions shown above.

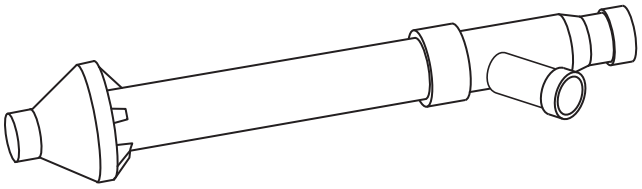

Concentric Vent Kit

A93086

A concentric vent kit allows vent and combustion-air pipes to terminate through a single exit in a roof or side wall. One pipe runs inside the other allowing venting through the inner pipe and combustion air to be drawn in through the outer pipe.

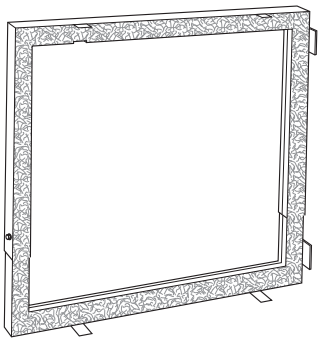

Downflow Subbase

A88202

One base fits all furnace sizes. The base is designed to be installed between the furnace and a combustible floor when no coil box is used or when a coil box other than a Carrier cased coil is used. It is CSA design certified for use with Carrier branded furnaces when installed in downflow applications.

OPTIONAL MEDIA FILTER CABINET

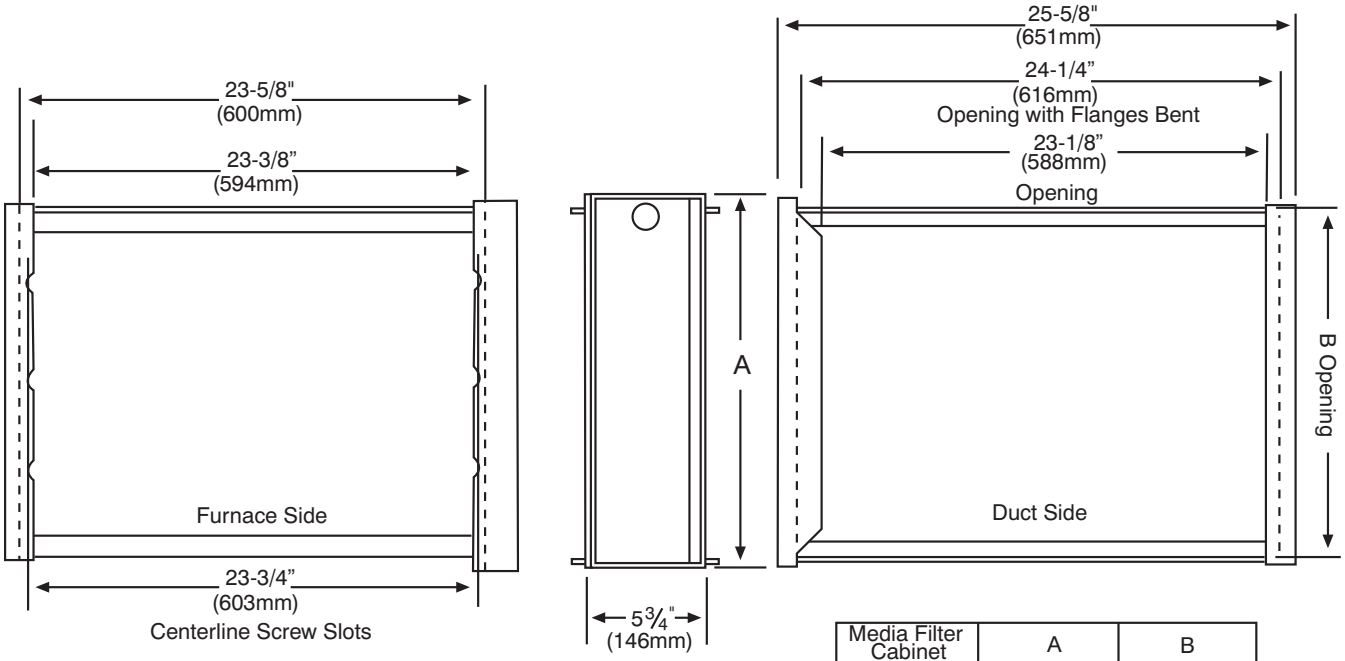

Media Filter Cabinet	A	B
16" (406mm)	17" (432mm)	16" (406mm)
20" (508mm)	21" (533mm)	20" (508mm)
24" (610mm)	25" (635mm)	24" (610mm)

NOTE: Media cabinet is matched to the bottom opening on furnace. May also be used for side return.

A12428

TYPICAL WIRING SCHEMATIC

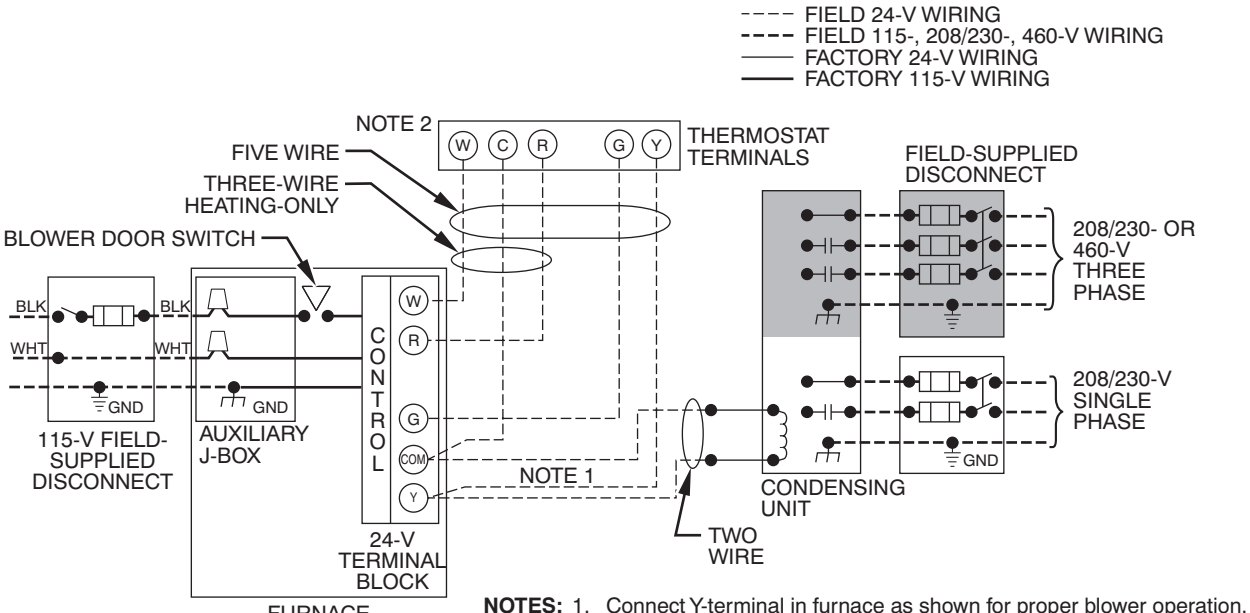

NOTES: 1. Connect Y-terminal in furnace as shown for proper blower operation.
2. Some thermostats require a "C" terminal connection as shown.
3. If any of the original wire, as supplied, must be replaced, use same type or equivalent wire.

A11387

DIMENSIONAL DRAWING

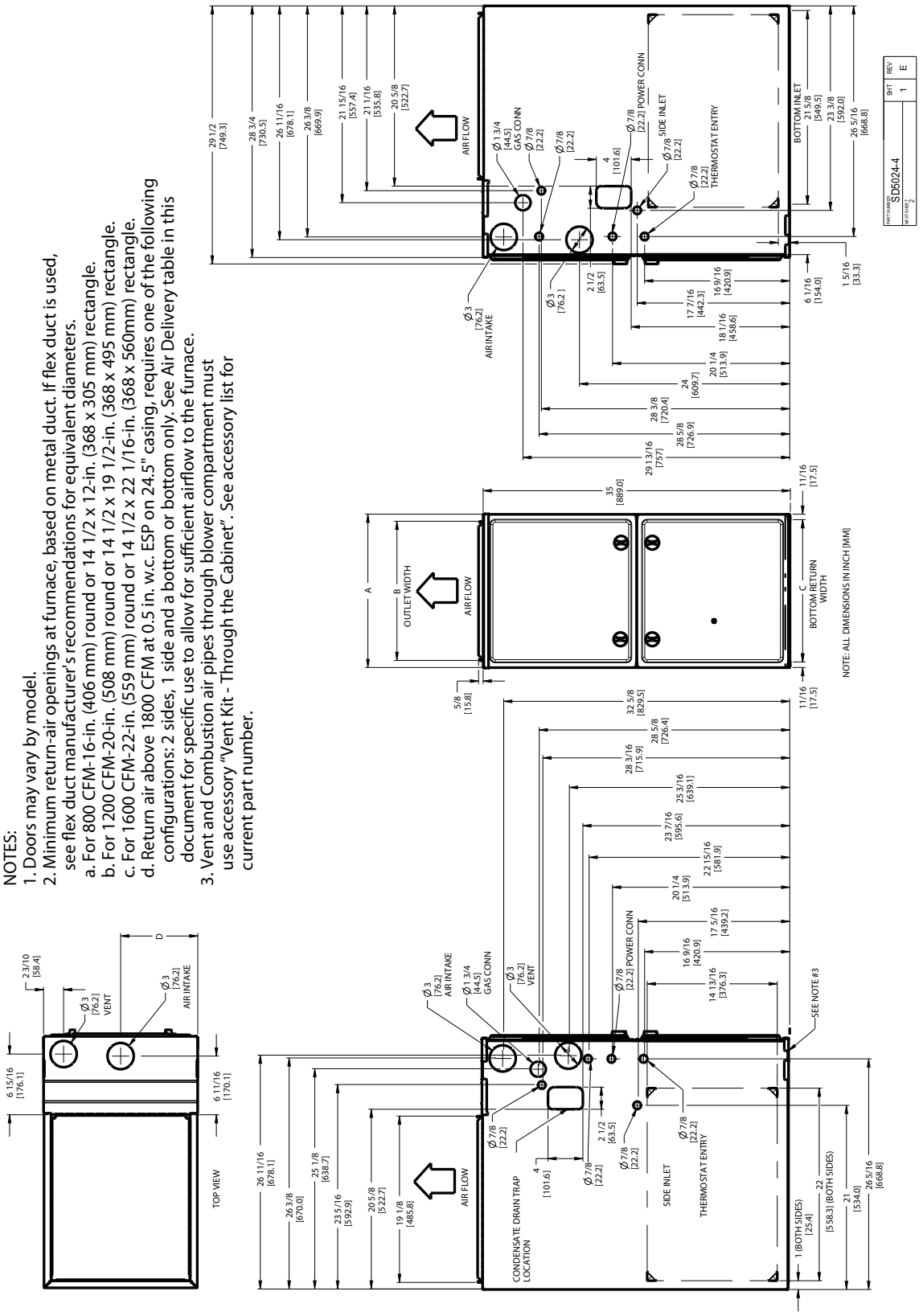

59TP6A FURNACE SIZE	A CABINET WIDTH	B OUTLET WIDTH	C BOTTOM INLET WIDTH	D AIR INTAKE	SHIP WT. LB (KG)
040 – 10	14 – 3/16 (361)	12 – 1/2 (319)	12 – 9/16 (322)	7 – 1/8 (181)	121.0 (55.0)
060 – 12					130.5 (59.2)
040 – 12	17 – 1/2 (445)	15 – 7/8 (403)	16 (406)	8 – 3/4 (222)	131.5 (59.6)
060 – 14					142.0 (64.4)
080 – 16					152.0 (68.9)
080 – 20	21 (533)	19 – 3/8 (492)	19 – 1/2 (495)	10 – 1/2 (267)	156.0 (70.8)
100 – 20					166.0 (75.3)
120 – 22	24 – 1/2 (622)	22 – 7/8 (581)	23 (584)	12 – 1/4 (311)	190.0 (86.2)

GUIDE SPECIFICATIONS

General

System Description

Furnish a _____ 4-way multipoise gas-fired condensing furnace for use with natural gas or propane (factory-authorized conversion kit required for propane); furnish external media cabinet for use with accessory media filter or standard filter.

Quality Assurance

Unit will be designed, tested and constructed to the current ANSI Z 21.47/CSA 2.3 design standard for gas-fired central furnaces.

Unit will be third party certified by CSA to the current ANSI Z 21.47/CSA 2.3 design standard for gas-fired central furnaces. Unit will carry the CSA Blue Star® and Blue Flame® labels. Unit efficiency testing will be performed per the current DOE test procedure as listed in the Federal Register.

Unit will be certified for capacity and efficiency and listed in the latest AHRI Consumer's Directory of Certified Efficiency Ratings.

Unit will carry the current Federal Trade Commission Energy Guide efficiency label.

Delivery, Storage, and Handling

Unit will be shipped as single package only and is stored and handled per unit manufacturer's recommendations.

Warranty (for inclusion by specifying engineer)

U.S. and Canada only. Warranty certificate available upon request.

Equipment

Blower Wheel and ECM Blower Motor

Galvanized blower wheel shall be centrifugal type, statically and dynamically balanced. Blower motor of ECM type shall be permanently lubricated with sealed ball bearings, of _____hp, and have infinitely variable speed from 600-1200 RPM operating only when motor inputs are provided. Blower motor shall be direct drive and soft mounted to the blower housing to reduce vibration transmission.

Filters

Furnace shall have reusable-type filters. Filter shall be _____ in. (mm) X _____ in. (mm). An accessory highly efficient Media Filter is available as an option. _____ Media Filter.

Casing

Casing shall be of .030 in. thickness minimum, pre-painted steel.

Draft Inducer Motor

Draft inducer motor shall be two-speed PSC design.

Primary Heat Exchangers

Primary heat exchangers shall be 3-Pass corrosion-resistant aluminized steel of fold-and-crimp sectional design and applied operating under negative pressure.

Secondary Heat Exchangers

Secondary heat exchangers shall be of a stainless steel flow-through of fin-and-tube design and applied operating under negative pressure.

Controls

Controls shall include a micro-processor-based integrated electronic control board with at least 16 service troubleshooting codes displayed via diagnostic flashing LED light on the control, a self-test feature that checks all major functions of the furnace, and a replaceable automotive-type circuit protection fuse. Multiple operational settings available, including separate blower speeds for low heat, high heat, low cooling, high cooling and continuous fan. Continuous fan speed may be adjusted from the thermostat. Cooling airflow will be selectable between 325 to 400 CFM per ton of air conditioning. Features will also include temporary reduced airflow in the cooling mode for improved dehumidification when a TP-PRH is selected as the thermostat.

Operating Characteristics

Heating capacity shall be _____ Btuh input; _____ Btuh output capacity.

Fuel Gas Efficiency shall be_____ AFUE.

Air delivery shall be _____ cfm minimum at 0.50 in. W.C. external static pressure.

Dimensions shall be: depth_____in. (mm); width _____in. (mm); height_____in. (mm) (casing only). Height shall be _____in. (mm) with A/C coil and _____in. (mm) overall with plenum.

Electrical Requirements

Electrical supply shall be 115 volts, 60 Hz, single-phase (nominal). Minimum wire size shall be _____AWG; maximum fuse size of HACR-type designated circuit breaker shall be _____ amps.

Special Features

Refer to section of the product data identifying accessories and descriptions for specific features and available enhancements.

Copyright 2017 Carrier Corp. • 7310 W. Morris St. • Indianapolis, IN 46231

Edition Date:02/17

Catalog No: 59TP6A–07PD

Manufacturer reserves the right to change, at any time, specifications and designs without notice and without obligations.

Replaces: 59TP6A–05PD