619K*C
Cassette Ductless System
Sizes 12 to 24

Installation Instructions

NOTE: Read the entire instruction manual before starting the installation.

TABLE OF CONTENTS

	PAGE
SAFETY CONSIDERATIONS	2
PARTS LIST	3
SYSTEM REQUIREMENTS	4
DIMENSIONS – INDOOR	5
CLEARANCES – INDOOR	7
INSTALLATION TIPS	8
INDOOR UNIT INSTALLATION	8
ELECTRICAL DATA	11
CONNECTION DIAGRAMS	11
START–UP	13
TROUBLESHOOTING	14

SAFETY CONSIDERATIONS

Installing, starting up, and servicing air−conditioning equipment can be hazardous due to system pressures, electrical components, and equipment location (roofs, elevated structures, etc.).

Only trained, qualified installers and service mechanics should install, start−up, and service this equipment.

Untrained personnel can perform basic maintenance functions such as cleaning coils. All other operations should be performed by trained service personnel.

When working on the equipment, observe precautions in the literature and on tags, stickers, and labels attached to the equipment.

Follow all safety codes. Wear safety glasses and work gloves. Keep quenching cloth and fire extinguisher nearby when brazing. Use care in handling, rigging, and setting bulky equipment.

Read these instructions thoroughly and follow all warnings or cautions included in literature and attached to the unit. Consult local building codes and National Electrical Code (NEC) for special requirements. Recognize safety information. This is the safety−alert symbol ⚠. When you see this symbol on the unit and in instructions or manuals, be alert to the potential for personal injury. Understand these signal words: **DANGER**, **WARNING**, and **CAUTION**. These words are used with the safety−alert symbol. **DANGER** identifies the most serious hazards which **will** result in severe personal injury or death. **WARNING** signifies hazards which **could** result in personal injury or death. **CAUTION** is used to identify unsafe practices which **may** result in minor personal injury or product and property damage. **NOTE** is used to highlight suggestions which **will** result in enhanced installation, reliability, or operation.

⚠ WARNING

ELECTRICAL SHOCK HAZARD

Failure to follow this warning could result in personal injury or death.

Before installing, modifying, or servicing system, main electrical disconnect switch must be in the OFF position. There may be more than 1 disconnect switch. Lock out and tag switch with a suitable warning label.

⚠ WARNING

EXPLOSION HAZARD

Failure to follow this warning could result in death, serious personal injury, and/or property damage.

Never use air or gases containing oxygen for leak testing or operating refrigerant compressors. Pressurized mixtures of air or gases containing oxygen can lead to an explosion.

⚠ CAUTION

EQUIPMENT DAMAGE HAZARD

Failure to follow this caution may result in equipment damage or improper operation.

Do not bury more than 36 in. (914 mm) of refrigerant pipe in the ground. If any section of pipe is buried, there must be a 6 in. (152 mm) vertical rise to the valve connections on the outdoor units. If more than the recommended length is buried, refrigerant may migrate to the cooler buried section during extended periods of system shutdown. This causes refrigerant slugging and could possibly damage the compressor at start−up.

PARTS LIST

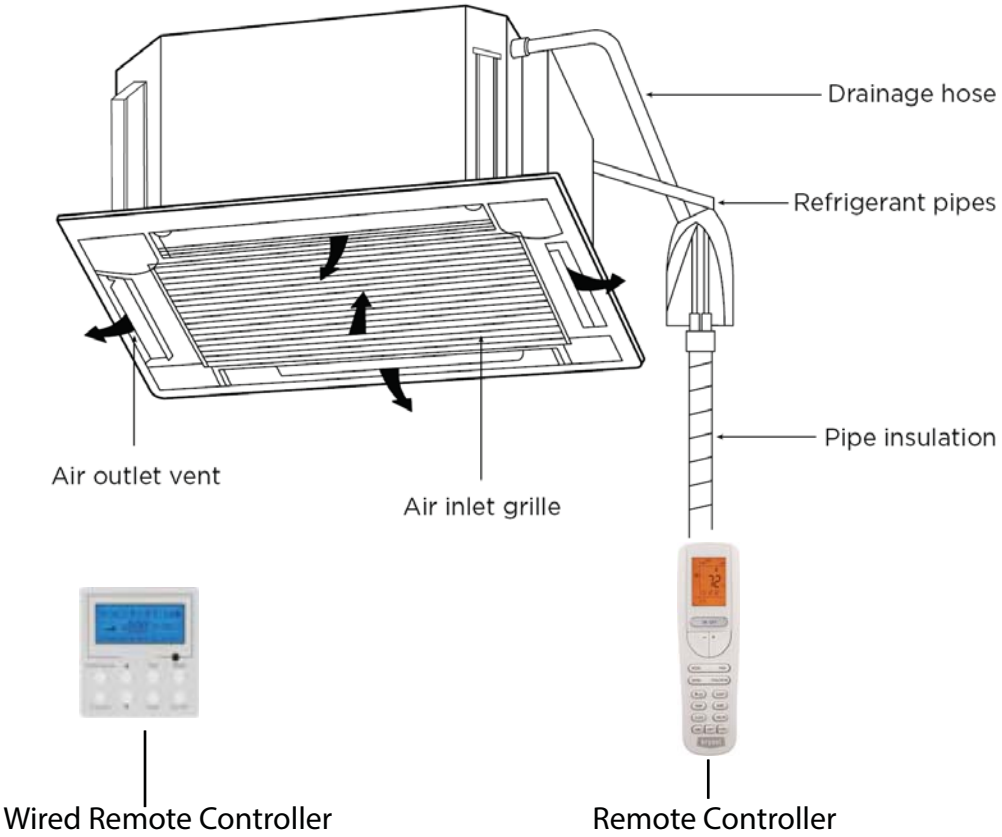

Fig. 1 — Parts List

NOTE: If the outdoor unit is higher than the indoor unit, prevent rain from flowing into the indoor unit along the connection pipe by making a downward arc in the connection pipe before it enters the wall to the indoor unit. This ensures that rain drips from the connection pipe before it enters the wall.

– Piping and the interconnecting wiring are field supplied.

– The illustration above is only a sketch. Different models may be slightly different.

Table 1— Parts List Indoor Cassette

Indoor Cassette		
Size	**Name**	**Qty**
12,18	Remote control	1
	Battery (1.5V)	2
	Screw M4X25	2
	GasketM6Xφ18X1.4	4
	GasketM10Xφ30X2.5	10
	Screw ST4.8X13 HC	4
	Screw M6X25	4
	Nut of Connector Pipe(B) Package	1
	Pipe Connection Nut ("I" shape)	1
	Drain Hose	1
	Connection wire of wired control	1
	Wired controller	1
24	Remote control	1
	Battery (1.5V)	2
	Screw M4X25	2
	Gasket location board	1
	GasketM10Xφ30X2.5	10
	Screw ST4.8X13 HC	4
	bellows φ16	1
	Nut of Connector Pipe(B) Package	1
	Drain Hose Sub-Assy	1
	Connection wire of wired control	1
	Wired controller	1

The following units are covered in these installation instructions.

Table 2—Indoor Units

Description	kBTUh	V-Ph-Hz	Indoor Model Number	Grille Model Number
Cassette	12	208/230-1-60	619KEQ012CBGA	619K-Q001CBGA
	18	208/230-1-60	619KEQ018CBGA	619K-Q001CBGA
	24	208/230-1-60	619KEQ024CBGA	619K-Q002CBGA

SYSTEM REQUIREMENTS

Allow sufficient space for airflow and servicing unit. See Fig. 4 for minimum required distances between unit and walls or ceilings.

Piping

IMPORTANT: **Both refrigerant lines must be insulated separately.**

- Table 3 lists the pipe sizes for the indoor unit. Refer to the outdoor unit installation instructions for other allowed piping lengths and refrigerant information.

Table 3—Indoor Unit Pipe Sizes

UNIT SIZE		12K (208/230V)	18K (208/230V)	24K (208/230V)
Gas Pipe	in	3/8	1/2	5/8
	(mm)	9.52	12.7	16
Liquid Pipe	in	1/4	1/4	3/8
	(mm)	6.35	6.35	9.52

Wiring

All wires must be sized per NEC (National Electrical Code) or CEC (Canadian Electrical Code) and local codes. Use the Electrical Data table MCA (minimum circuit amps) and MOCP (maximum over current protection) to correctly size the wires and the disconnect fuse or breakers respectively.

Per caution note, only stranded copper conductors with a 600 volt rating and double insulated copper wire must be used. The use of BX cable is not recommended.

Recommended Connection Method for Power and Communication Wiring – Power and Communication Wiring:
The main power is supplied to the outdoor unit. The field supplied 14/3 power/communication wiring from the outdoor unit to the indoor unit consists of four (4) wires and provides the power for the indoor unit.

Two wires are high voltage AC power, one is communication wiring and the other is a ground wire.

Recommended Connection Method for Power and Communication Wiring (To minimize communication wiring interference) Power Wiring:
The main power is supplied to the outdoor unit. The field supplied power wiring from the outdoor unit to the indoor unit consists of three (3) wires and provides the power for the indoor unit. Two wires are high voltage AC power and one is a ground wire.

To minimize voltage drop, the factory recommended wire size is 14/2 stranded with a ground.

Communication Wiring:
A separate shielded stranded copper conductor only, with a 600 volt rating and double insulated copper wire, must be used as the communication wire from the outdoor unit to the indoor unit. Please use a separate shielded 16GA stranded control wire.

⚠ CAUTION

EQUIPMENT DAMAGE HAZARD

Failure to follow this caution may result in equipment damage or improper operation.

- Wires should be sized based on NEC and local codes.
- Use copper conductors only with a 600 volt rating and double insulated copper wire.

DIMENSIONS – INDOOR

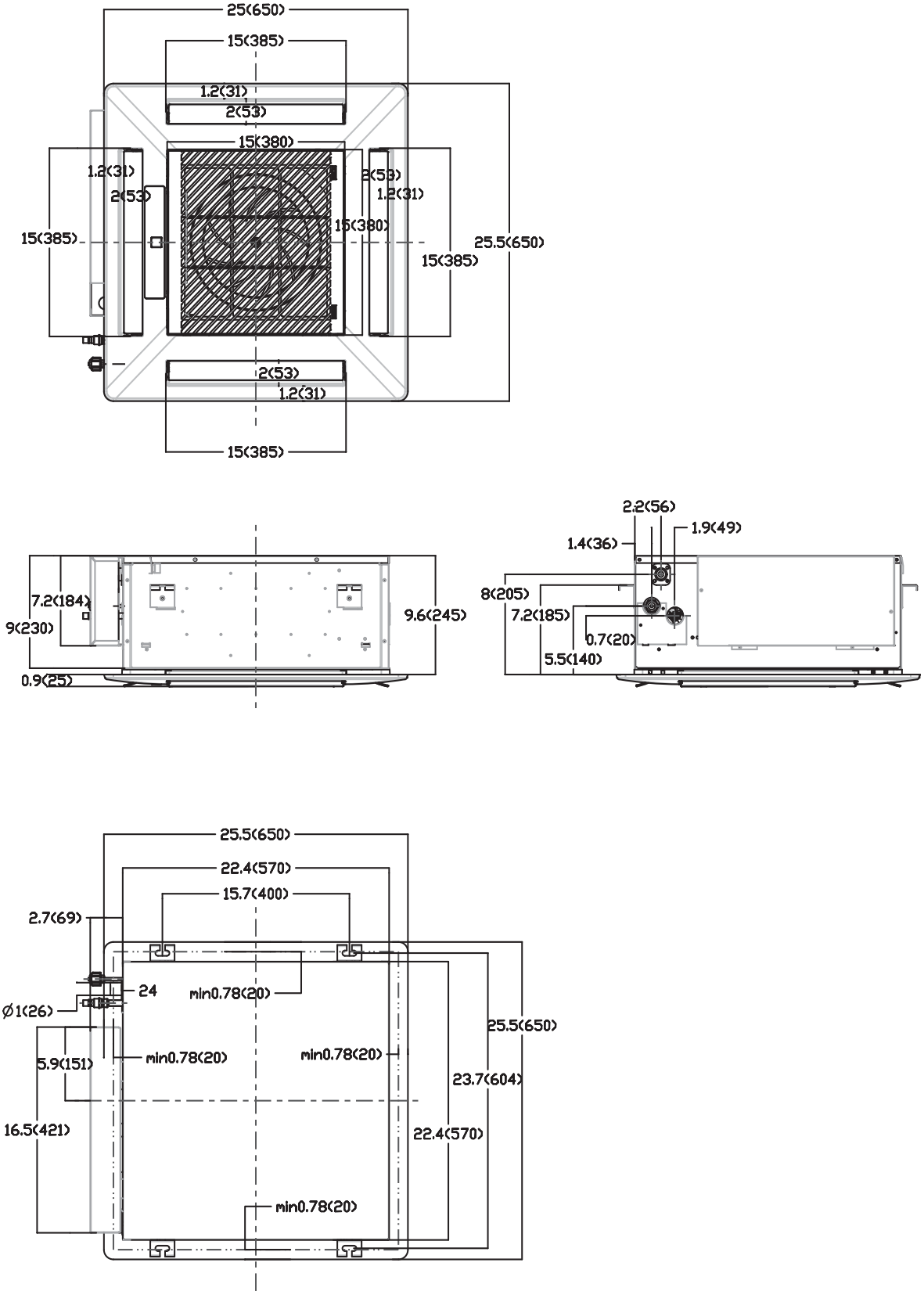

Fig. 2 – Size 12 and 18 Cassette Dimensions

Table 4—Dimensions Indoor

SYSTEM SIZE		12	18
Height (H)	in (cm)	9.1 (23.1)	9.1 (23.1)
Width (W)	in (cm)	22.4 (56.9)	22.4 (56.9)
Depth (D)	in (cm)	22.4 (56.9)	22.4 (56.9)
Weight-Net	lbs(kgs)	39.7 (18)	39.7 (18)

DIMENSIONS – INDOOR (CONTINUED)

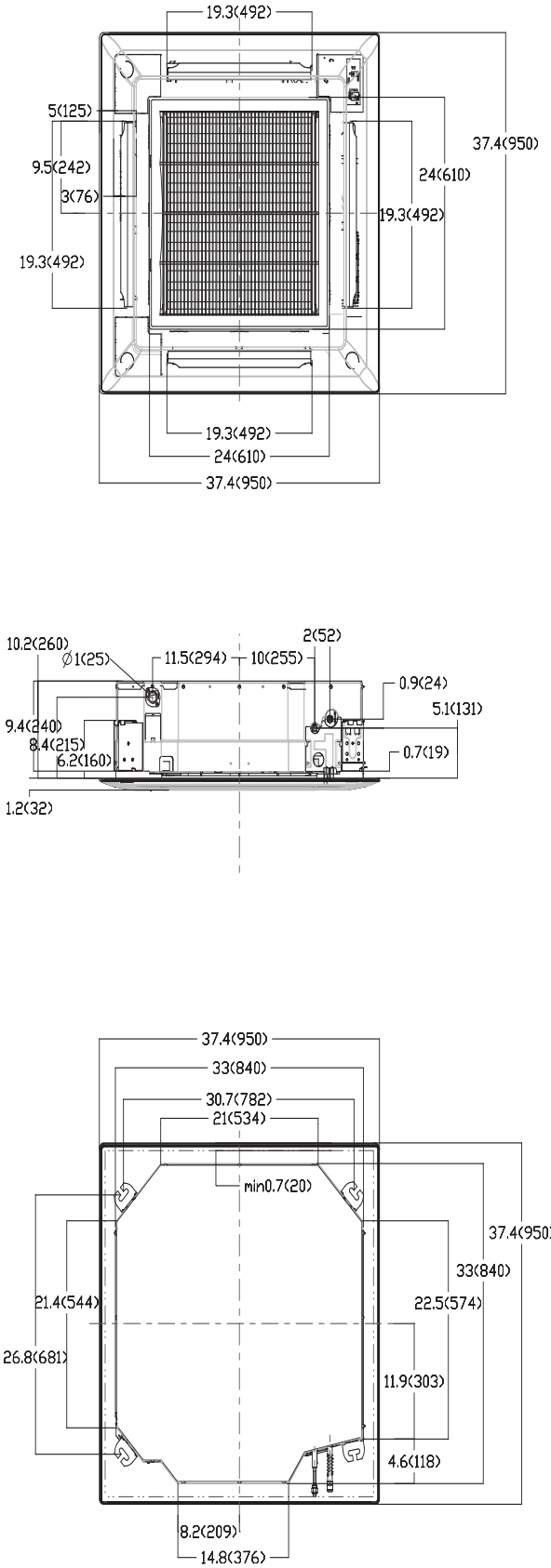

Fig. 3 – Size 24 Cassette Dimensions

Table 5—Dimensions

SYSTEM SIZE		24
Height (H)	In (CM)	9.4 (23.9)
Width (W)	In (CM)	33.1 (84.1)
Depth (D)	In (CM)	33.1 (84.1)
Weight-Net	Lbs (Kgs)	61.7 (28)

CLEARANCES – INDOOR

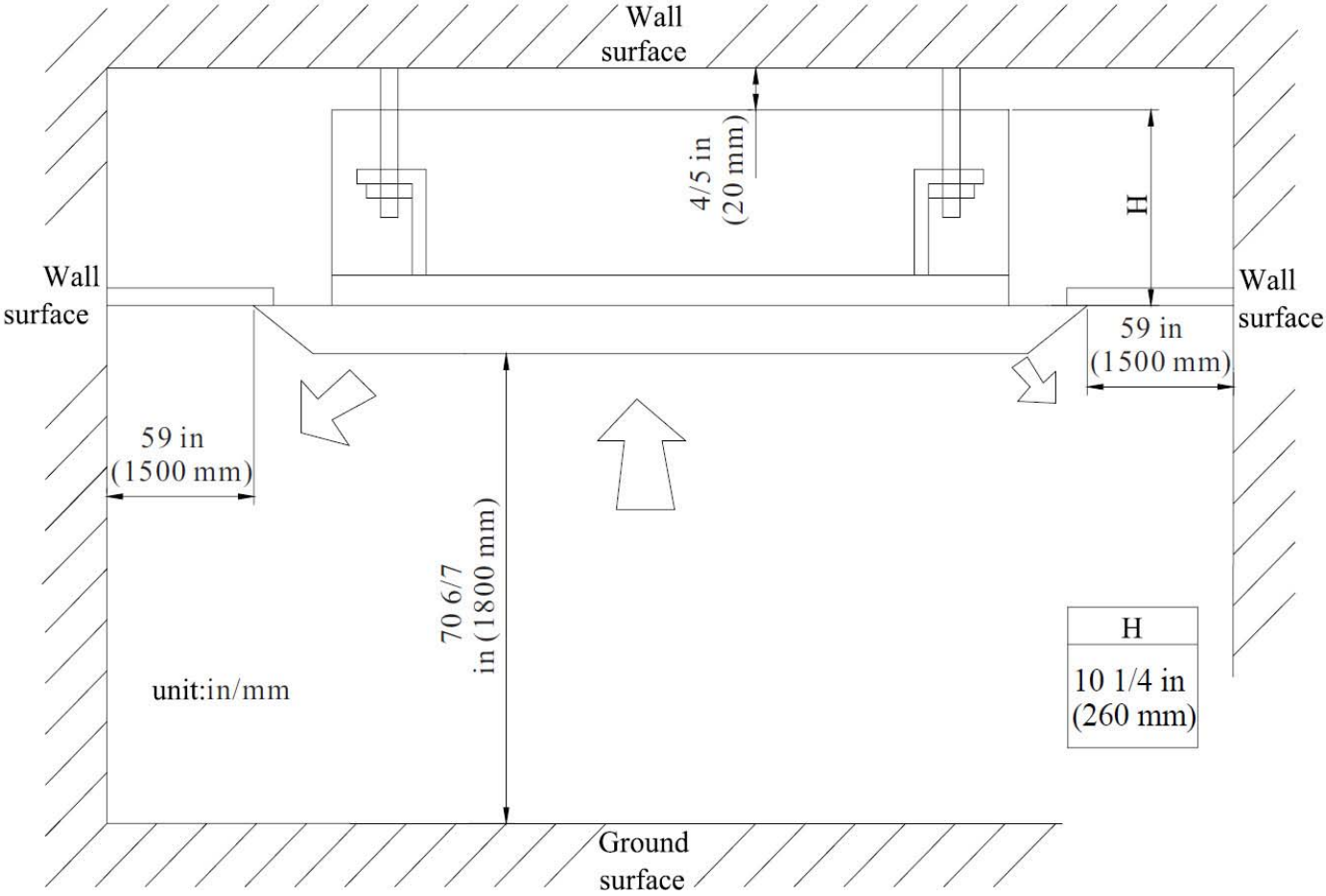

Fig. 4 – Cassette Clearance

INSTALLATION TIPS

Ideal installation locations include:

Indoor Unit

- A location where there are no obstacles near inlet and outlet area.
- A location which can bear the weight of indoor unit.
- Do not install indoor units near a direct source of heat such as direct sunlight or a heating appliance.
- A location which provides appropriate clearances as outlined in Fig. 4.

INDOOR UNIT INSTALLATION

INSTALL MOUNTING PLATE

Select install location of the indoor unit

1. Obstructions should be removed from the indoor unit's intake or outlet vents so the air can flow throughout the room.
2. Make sure the installation is in accordance with the requirements of the required clearances on the schematic diagram.
3. Select a location that can withstand 4 times the weight of the indoor unit and would not increase the operating noise.
4. Ensure the unit is level.
5. Select a location where condensated coagulated water can drain easy connect easy with the outdoor unit.
6. Ensure there is enough space for care and maintenance. Ensure the weight between the indoor unit and ground is above 70 6/7 in (1800 mm).
7. When installing the steeve bolt, check if the install place can withstand a weight 4 times of the unit's. If not, reinforce before installation. Refer to the install cardboard and find where the location should be reinforced.

NOTE: There will be lots of lampblack and dust stick on the acentric, heat exchanger and water pump in the dining room and kitchen, which would reduce the capacity of heat exchanger, lead water leakage and abnormal operation of the water pump. The following treatment should be taken under this circumstance:

(1.) Ensure the smoke trap above the cooker has enough capacity to obviate lampblack to prevent the indraft of the lampblack by the air conditioner.

(2.) Keep the air conditioner far from the kitchen so that the lampblack does not indraft into the air conditioner.

IMPORTANT: To guarantee the good performance, the unit must be installed by professional personnel according with this instruction.

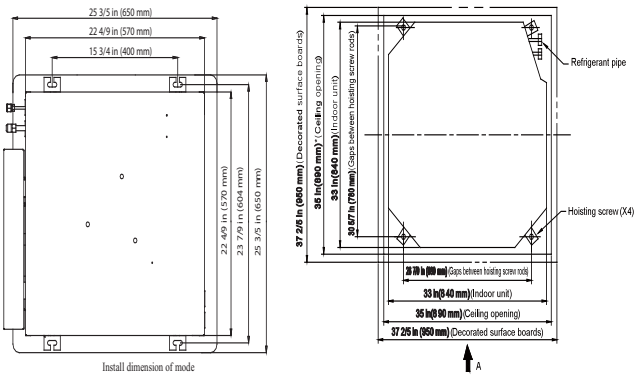

Fig. 5 — Dimension of ceiling opening and location of the hoisting screw (M10)

IMPORTANT: The drilling of holes in the ceiling must be done by the professional personnel.

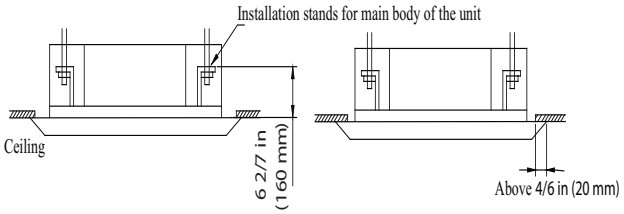

Fig. 6 — Drilling holes

NOTE: The dimension for the ceiling openings with * marks can be as large as 35 5/6 in (910 mm). But the overlapping sections of the ceiling and the decorated surface boards should be maintained at no less than 4/6 in (20 mm).

Hoisting the main body of the air conditioner

The primary step for installing the indoor unit.

- When attaching the hoisting stand on the hoisting screw, do use nut and gasket individually at the upper and lower of the hoisting stand to secure it. The use of gasket anchor board can prevent gasket break off.

Use install cardboard.

- Refer to the install cardboard about the dimension of ceiling opening.
- The central mark of the ceiling opening is marked on the install cardboard.

1. Install the install cardboard on the unit by bolt (3 pieces) and fix the angle of the drainage pipe at the outlet vent by bolt.
2. Adjust the unit to the suitable install place. Refer to Fig. 6.
3. Check if the unit is horizontal.
4. The inner drainage pump and bobber switch are included in the indoor unit, check if the 4 angle of every unit are horizontal by the water lever. If the unit is slanted toward the opposite of the coagulate water flow, there may be a malfunction of the bobber switch and lead water drop).
5. Backout the gasket anchor board used to prevent gasket break off and tighten the nut on it.
6. Backout the install cardboard.

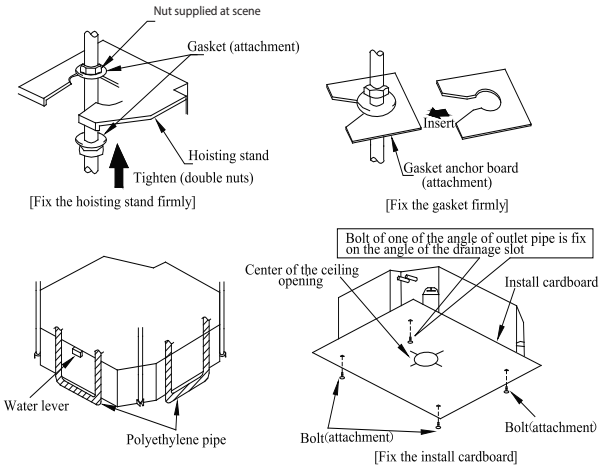

Fig. 7 — Hoisting the main body

NOTE: Tighten the nuts and bolts to prevent the air conditioner from breaking off.

CONNECTION OF THE REFRIGERANT PIPE

Connection of the Refrigerant Pipe

When connecting the pipe to the unit or backout from the unit, use both a spanner and a torque wrench.

When connecting, smear both inside and outside of the flare nut with freeze motor oil, screw it by hand and then tighten with a spanner.

Refer to form 1 to check if the wrench had been tightened (too tight would mangle the nut and lead leakage).

Examine the connection pipe to see if it had a gas leak, then take the treatment of heat insulation. Only use a median sponge to entwine the wiring interface of the gas pipe and heat preservation sheath of the gas collection tube.

DRAINAGE HOSE

1. Install the drain hose.

- The diameter of the drain hose should be equal or bigger than the connection pipe's. (The diameter of the polythene pipe: Outer diameter 1 in (25 mm) Surface thickness ≥ 0.06 in (1.5 mm).
- The drain hose should be short and the drooping gradient should be less than 1/100 to prevent the formation of an air bubble. If the drain hose does not has enough of a drooping gradient, a drain raising pipe should be added.
- To prevent a bend in the drain hose, the distance between the hoisting stand should is 3.28 to 4.92 ft. (1 to 1.5 m) (see Fig.8).

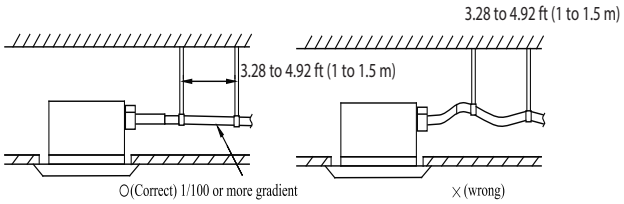

Fig. 8 — Drain Hose

- Use the drain hose and clamp attached. Insert the drain hose into the drain vent, and then tighten the clamp.
- Entwine the big sponge on the clamp of drain hose to insulate heat.
- Heat insulation should be applied to the indoor drain hose.

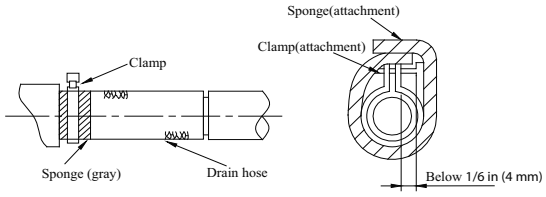

Fig. 9 — Drain Hose

NOTE: Drain Setup pipe

- The install height of the drain raising pipe should less than 11 in. (280 mm).
- The drain raising pipe should form a right angle with the unit, and distance to unit should not beyond 11.81 in. (300mm).

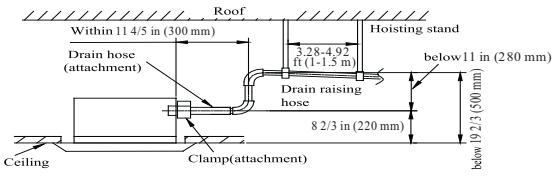

Fig. 10 — Drain Setup Pipe

INSTRUCTION

The slant gradient of the attached drain hose should be within 3 in. (75 mm) so that the drain hole does not have to endure unnecessary outside force.

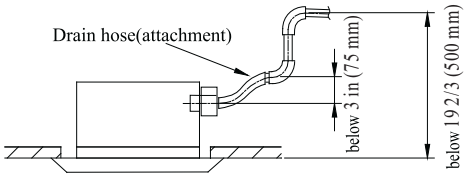

Fig. 11 — Slant gradient

1. Install the drain hose according to the following process if several drain hoses join together.

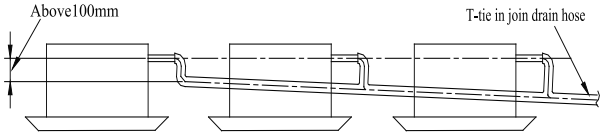

The specs of the selected join drain hose should fits the running capacity of the unit.

Fig. 12 — Slant gradient

2. Check the smoothness of the drain after the installation.
3. Check the drain state by immitting 36 3/5 in3 (600 cc) water slowly from the outlet vent or test hole.
4. Check the drain in the state of refrigerating after installing the electric circuit.

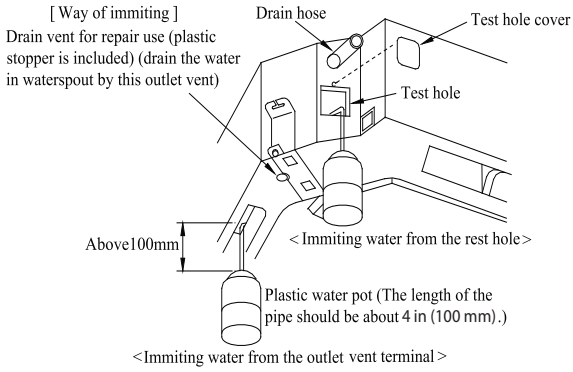

Fig. 13 — Drain

Electrical wiring

NOTE: The power of the entire indoor unit must be connected in the outdoor unit.

- About the electrical wiring, see the circuit diagram attached with the unit.
- All electrical wiring installation must be done by professional personnel.
- Remove the earthing treatment.

Wiring method of connection unit and controller

Connection wiring (communication)

1. Open the electric box cover, drag the wiring (communication) from rubber plug A, and impact them well individually with an impact fastener.
2. Wire according to the indoor side circuit diagram.
   (1.) Fix the impact fastener after the connection.
   (2.) Entwine the small sponge on the electric wire (entwine to prevent condensation).
   (3.) Impact tightly with an impact fastener after connection. Then fir on the electric box.
   (4.) Connect the 3 cord rubber wire to the counter terminal of the 3 way terminal board.

The power cord reference power cord standard recommending table.

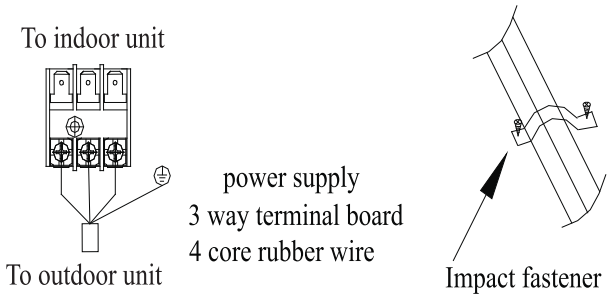

Fig. 14 — Power cord

Install the panel

1. Set the panel to the indoor unit body by matching the position of the panel's swing flap motor to the panel's piping position to the indoor unit's piping position (see Fig. 15).
2. Install the panel
   (1.) Install the panel on the indoor unit temporarily. When installing, hang the latch on the hook that is located on the opposite side of the swing flap on the panel of the indoor unit (two positions).
   (2.) Hang the remaining 2 latches to the hooks on the sides of the indoor unit. (Be careful not to let the swing motor lead wire get caught in the sealing material).
   (3.) Screw the 4 hexagon head screws under the latches in about 3/5 in (15 mm). The panel should rise.
   (4.) Adjust the panel by turning it toward the direction pointed by the arrow (see Fig. 15) so the adjust board connects well to the ceiling.
   (5.) Tighten the screws until the thickness of the sealing material between the panel and the indoor unit is reduced to 5–8mm.

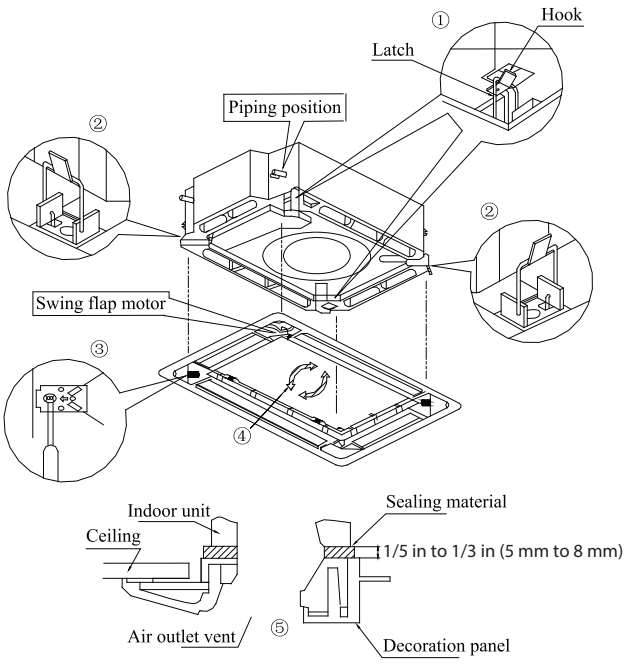

Fig. 15 — Panel Installation

NOTE:

(1.) Improper screwing of the screws may cause issues as shown in Fig. 16.

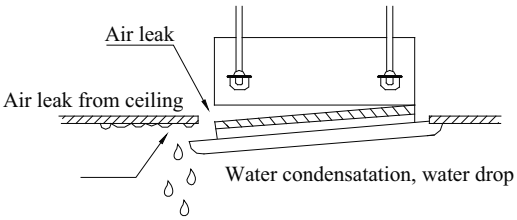

Fig. 16 — Improper Screwing

(2.) If a gap still exists between the ceiling and decoration panel after tightening the screws, readjust the height of the indoor unit (see Fig. 17).

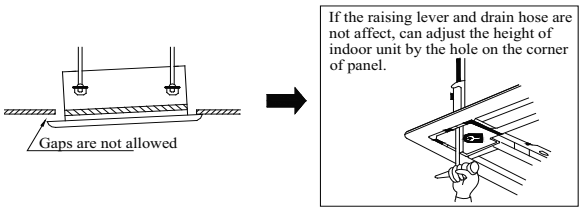

Fig. 17 — Improper Screwing

IMPORTANT: After securing, ensure there is no gap between the ceiling and the panel.

(3.) Wiring of the decoration panel (Fig.18). Connect the joints for the swing flap motor lead wire (at 2 places) onto the panel.

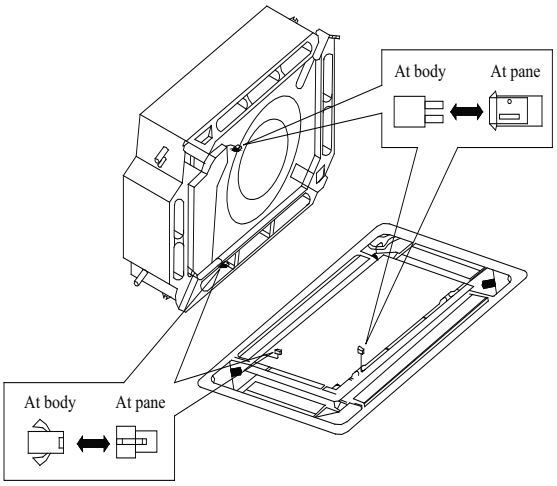

Fig. 18 — Connect joints

ELECTRICAL DATA

Table 6—Electrical Data

HIGH WALL UNIT SIZE	INDOOR FAN			MAX FUSE CB AMP
	V–Ph–Hz	FLA	HP	
12K	208/230–1–60	0.18	1/72	Refer to outdoor unit installation instructions – Indoor unit powered by the outdoor unit. Sizes 18 to 42 and powered by the Branch Box sizes 48 and 56.
18K		0.18	1/72	
24K		0.43	1/20	

LEGEND
FLA – Full Load Amps

CONNECTION DIAGRAMS

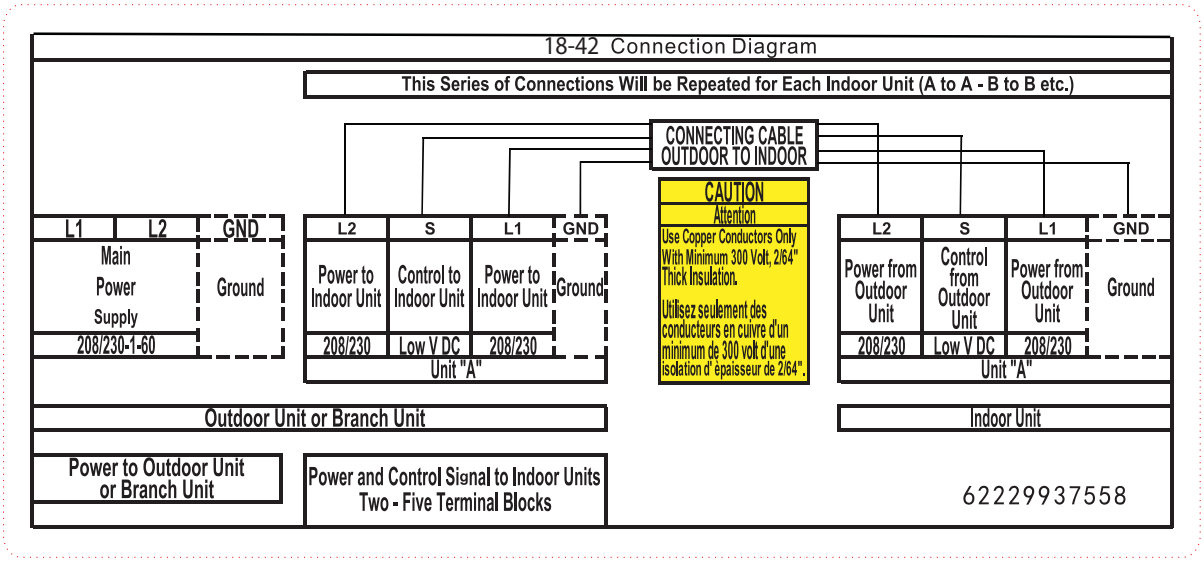

Fig. 19 – Connection Diagram Outdoor Multi–zone Sizes 18–42

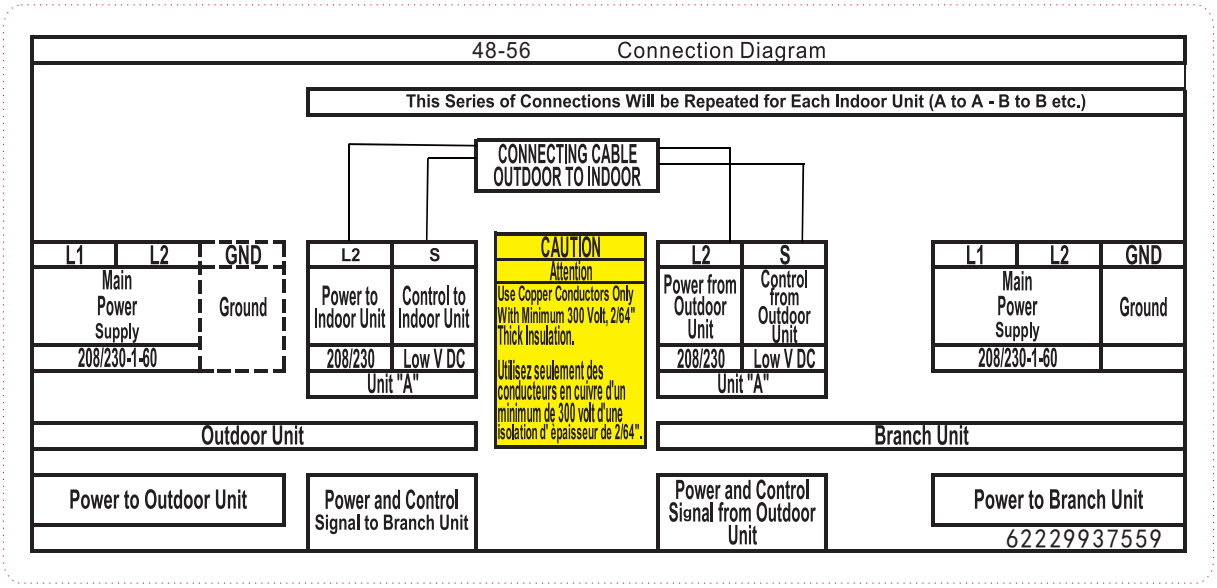

Fig. 20 – Connection Diagram Outdoor Multi–zone Sizes 48–56

Notes:
1. Do not use thermostat wire for any connection between indoor and outdoor units.
2. All connections between indoor and outdoor units must be as shown. **The connections are sensitive to polarity and will result in a fault code.**

12K to 24K 208/230V

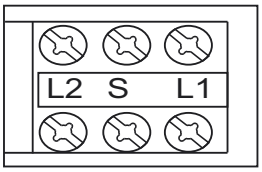

L2	S	L1
Power from Outdoor Unit	Control from Outdoor Unit	Power from Outdoor Unit
208/230-1-60	Low V DC	208/230-1-60

Fig. 21 – Control and Power Wiring on Indoor Unit

INSTALL ALL POWER, INTERCONNECTING WIRING, AND PIPING TO THE INDOOR UNIT

1. Run interconnecting piping and wiring from outdoor unit to indoor unit.
2. Run interconnecting cable from outdoor unit to indoor unit.
3. Route piping and drain (inside to outside). Fit the interconnecting wiring into back side of indoor unit.
4. Open cover of indoor unit and remove field wiring terminal block cover.
5. Pull interconnecting wire.
6. Connect wiring from outdoor unit per connection diagram (see Fig. 19 and 20).
7. Replace field wiring cover and close the indoor unit cover.
8. Piping:
   a. Cut the pipe, with a pipe cutter, at 90 degrees (see Fig. 22).
   b. Remove the service connection, if provided with the unit.

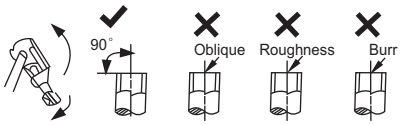

A150767

Fig. 22 – Pipe Cutting

   c. Remove all the burrs from the cut cross section of the pipe avoiding any burrs inside the tubes.
   d. Remove the flare nuts attached to the indoor and outdoor units.
   e. Install the correct size flare nut onto the tubing and make the flare connection. Refer to Table 7 for the flare nut spaces.

Table 7—Flare Nut Spacing

OUTER DIAM. (mm)	A (mm)	
	Max.	Min.
Ø 1/4" (6.35)	0.05 (1.3)	0.03 (0.7)
Ø 3/8" (9.52)	0.06 (1.6)	0.04 (1.0)
Ø 1/2" (12.7)	0.07 (1.8)	0.04 (1.0)
Ø 5/8" (15.88)	0.09 (2.2)	0.08 (2.0)

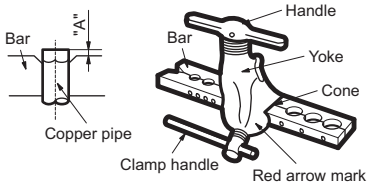

A150768

Fig. 23 – Flare Nut Spacing

   f. Apply a small amount of refrigerant oil to the flare connection on the tubing.
   g. Align center of the pipes and/or service valve.

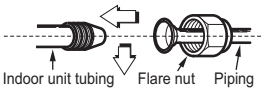

A150769

Fig. 24 – Align Pipe Center

   h. Connect both the liquid and gas piping to the indoor unit
   i. Tighten the flare nut using a torque wrench as specified in Table 8.

Table 8—Tightening Torque

PIPE DIAMETER INCH (mm)	TIGHTENING TORQUE	
	Ft–lb	N–m
Ø1/4" (6.35)	10 to 13	13.6 to 17.6
Ø3/8" (9.52)	24 to 31	32.5 to 42.0
Ø1/2" (12.7)	37 to 46	50.1 to 62.3
Ø5/8" (15.88)	50 to 60	67.7 to 81.3

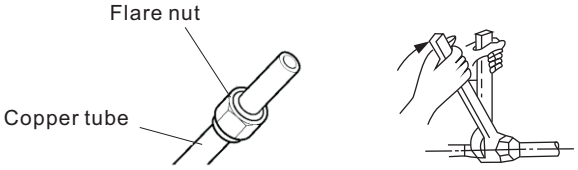

A150770

Fig. 25 – Tighten the Flare Nut

9. Connect the drain line.

WIRELESS REMOTE CONTROL INSTALLATION

Mounting Bracket (if installed on the wall)

1. Use the two screws supplied with control to attach the Mounting Bracket to the wall in a location selected by customer and within operating range.
2. Install batteries in Remote Control.
3. Place Remote Control into remote control Mounting Bracket.

NOTE: For remote control operation, refer to the unit Owner's Manual.

WIRED REMOTE CONTROLLER

For setup instructions, refer to the Wired controller installation manual.

⚠ CAUTION

UNIT DAMAGE HAZARD

Failure to follow this caution may result in equipment damage or improper operation.

Never use the system compressor as a vacuum pump.

Refrigerant tubes and indoor coil should be evacuated using the recommended deep vacuum method of 500 microns. The alternate triple evacuation method may be used if the procedure outlined below is followed. Always break a vacuum with dry nitrogen.

FINAL TUBING CHECK

IMPORTANT: Ensure certain factory tubing on the indoor unit has not shifted during shipment. Ensure tubes are not rubbing against each other or any sheet metal. Pay close attention to feeder tubes, making sure wire ties on feeder tubes are secure and tight.

START–UP

Test Operation

Perform a test operation after completing gas leak and electrical safety check (see Fig. 26).

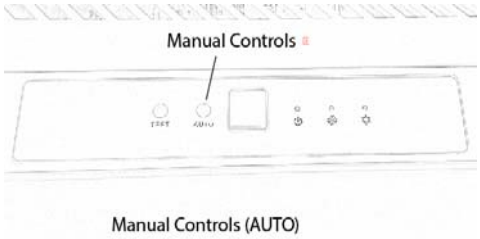

Fig. 26 – Test Operation

1. Push the "ON/OFF" button on the Remote Control to begin testing.

NOTE: A protection feature prevents air conditioner from being activated for approximately 3 to 4 minutes.

2. Push MODE button, select COOLING, HEATING, FAN mode to check that all functions work correctly.
3. To run the test using the manual button in the indoor unit:
   (4.) Open front panel of the indoor unit;
   (5.) Push the manual switch once to energize the unit. The set conditions of manual operation are as follows:
   · Preset set point: 76°F (24°C)
   · Fan speed: AUTO
   · Discharge air direction: Pre–set position based on operation in "Cool" or "Heat" mode.
4. Be sure to set manual switch to "OFF" (by pushing it twice again) after finishing test operation.

SYSTEM CHECKS

1. Conceal the tubing where possible.
2. Make sure that the drain tube slopes downward along its entire length.
3. Ensure all tubing and connections are properly insulated.
4. Fasten tubes to the outside wall, when possible.
5. Seal the hole through which the cables and tubing pass.

INDOOR UNIT

1. Do all Remote Control buttons function properly?
2. Do the display panel lights work properly?
3. Does the air deflection louver function properly?
4. Does the drain work?

Explain Following Items To Customer (with the aid of the Owner's Manual):

1. How to turn air conditioner on and off; selecting COOLING, HEATING and other operating modes; setting a desired temperature; setting the timer to automatically start and stop air conditioner operation; and all other features of the Remote Control and display panel.
2. How to remove and clean the air filter.
3. How to set air deflection louver.
4. Explain care and maintenance.
5. Present the Owner's Manual and installation instructions to customer.

TROUBLESHOOTING

This unit has on−board diagnostics. Error codes are displayed on the wired remote controller and the outdoor unit microprocessor board with colored LED lights. Table 9 explains the error codes on both.

Table 9—Malfunction Status Table Outdoor Multi−zone Sizes 18 & 24

MALFUNCTION NAME	MALFUNCTION TYPE	INDOOR DISPLAY
Zero cross detection circuit malfunction(for indoor unit)	Hardware malfunction	U8
Malfunction protection of jumper cap(for indoor unit)	Hardware malfunction	C5
Feedback of without I DU motor(for indoor unit)	Hardware malfunction	H6
Indoor ambient temperature sensor is open/short circuited	Hardware malfunction	F1
Indoor evaporator temperature sensor is open/short circuited	Hardware malfunction	F2
Liquid valve temperature sensor is open/short circuited	Hardware malfunction	b5
Gas valve temperature sensor is open/short circuited	Hardware malfunction	b7
Modular temperature sensor is open/short circuited	Hardware malfunction	P7
Outdoor ambient temperature sensor is open/short circuited	Hardware malfunction	F3
Outdoor condenser middle pipe temperature sensor is open/short circuited	Hardware malfunction	F4
Outdoor discharge temperature sensor is open/short circuited	Hardware malfunction	F5
Communication malfunction	Hardware malfunction	E6
Malfunction of phase current detection circuit for compressor	Hardware malfunction	U1
Module high temperature protection	Viewing malfunction code through remote controller within 200s; displayed directly on indoor display after 200s	P8
Refrigerant lacking or blockage protection of system (not available for residential ODU)		F0
Charging malfunction of capacitor	Hardware malfunction	PU
High pressure protection of system	Hardware malfunction	E 1
Low pressure protection of system (reserved)	Hardware malfunction	E3
Compressor overload protection	Viewing malfunction code through remote controller within 200s; displayed directly on indoor display after 200s	H3
Indoor unit and outdoor unit do not match	Hardware malfunction	LP
Malfunction of memory chip	Hardware malfunction	E E
Wrong connection of communication wire or malfunction of electronic expansion valve	Hardware malfunction	dn
Malfunction protection of outdoor fan 1	Hardware malfunction	L3
Detection status of wrong connection of communication wire or malfunction of electronic expansion valve	Operation status	dd
Mode conflict	Operation status	E7
Refrigerant recycling mode	Operation status	Fo
X−fan	Operation status	AL
Defrosting or oil return i n heating mode	Operation status	H 1
Start failure of compressor	Viewing malfunction code through remote controller within 200s; displayed directly on indoor display after 200s	Lc
High discharge temperature protection of compressor		E4
Overload protection		E8
Whole unit over−current protection		E5
Compressor phase current protection		P5
Compressor de−synchronizing		H7
Compressor phase−lacking/phase−inverse protection		Ld
IPM modular protection		H5
DC bus−bar low voltage protection		PL
DC bus−bar high voltage protection		PH
PFC protection		HC
The four−way valve is abnormal		U7

TROUBLESHOOTING (CON'T)

This unit has on−board diagnostics. Error codes are displayed on the wired remote controller and the outdoor unit microprocessor board with colored LED lights. Table 10 explains the error codes on both.

Table 10—Malfunction Status Table Outdoor Multi−zone Sizes 30, 36, & 42

NAME OF MALFUNCTION	THE INDICATOR DISPLAY			INDOOR DISPLAY
	YELLOW LIGHT	RED LIGHT	GREEN LIGHT	
Compressor runs	Flash once			
Defrost	Flash twice			H1
Anti−freezing protection	Flash 3 times			E2
IPM protection	Flash 4 times			H5
AC over−current protection	Flash 5 times			E5
Over−burden protection	Flash 6 times			H4
Compressor exhaust high temperature protection	Flash 7 times			E4
Compressor overload protection	Flash 8 times			H3
Power protection	Flash 9 times			L9
EEPROM reads and write protection	Flash 11 times			
Low PN voltage protection	Flash 12 times			PL
Over voltage protection for PN	Flash 13 times			PH
PFC protection	Flash 14 times			HC
PFC module temperature protection	Flash 15 times			oE
Low pressure protection	Flash 17 times			E3
High pressure protection	Flash 18 times			E1
Limit/decline frequency(electric current)		Flash 1 times		
Frequency limit（exhaust)		Flash 2 times		
Frequency limit(Over−burden)		Flash 3 times		
Outdoor ambient sensor malfunction		Flash 6 times		F3
Outdoor tube sensor malfunction		Flash 5 times		F4
Exhaust sensor malfunction		Flash 7 times		F5
Attain the temperature of switch on		Flash 8 times		
Frequency limit(power)		Flash 13 times		
Outdoor fan malfunction		Flash 14 times		
Frequency limit(PFC module temperature)		Flash 15 times		
PFC module sensor malfunction		Flash 16 times		oE
Liquid pipe temperature sensor malfunction of A		Flash 17 times		
Gas pipe temperature sensor malfunction of A		Flash 18 times		
Liquid pipe temperature sensor malfunction of B		Flash 19 times		
Gas pipe temperature sensor malfunction of B		Flash 20 times		
Liquid pipe temperature sensor malfunction of C		Flash 21 times		
Gas pipe temperature sensor malfunction of C		Flash 22 times		
Liquid pipe temperature sensor malfunction of D		Flash 23 times		
Gas pipe temperature sensor malfunction of D		Flash 24 times		
Liquid pipe temperature sensor malfunction of E		Flash 25 times		
Gas pipe temperature				
sensor malfunction of E		Flash 26 times		
Exit of the condenser tube sensor malfunction		Flash 27 times		
Correspondence is normal			Flash 7 Times (n = indoor unit number)	
Communication failure between indoor unit and outdoor unit			Often bright	
(indoor unit all Communication failure)				
Indoor ambient sensor malfunction				F1
Indoor evaporate sensor malfunction				F2
Mode conflict				E7
Accept fluorine mode				Fo
Jumper cap malfunction protection				C5

TROUBLESHOOTING (CON'T)

This unit has on−board diagnostics. Error codes are displayed on the wired remote controller and the outdoor unit microprocessor board with colored LED lights. Table 11 explains the error codes on both.

Table 11—Malfunction Status Table Outdoor Multi−zone Sizes 48−56

ERRORS OF DEFINITION	MAIN CONTROL DISPLAY FOR OUTDOOR UNIT			INDOOR UNIT CODE	TESTING BOARD CODE
	YELLOW LED	RED LED	GREEN LED		
The compressor is start up	Flash 1 time				
IPM current protection	Flash 3 times			H5	H5
IPM temperature protection	Flash 5 times			P8	P8
PFC current protection	Flash 7 times			HC	HC
PFC temperature protection	Flash 8 times			P8	P8
Low voltage protection	Flash 9 times			PL	PL
High voltage protection	Flash 10 times			PH	PH
Low pressure protection	Flash 11 times			E3	E3
High pressure protection	Flash 12 times			E8	E8
High pressure switch protection	Flash 13 times			E1	E1
Capacitor charging error	Flash 14 times			PU	PU
Current protection	Flash 15 times			E5	E5
Memory card error	Flash 16 times			EE	EE
Compressor demagnetizing protection	Flash 17 times			HE	HE
Compressor de−synchronizing	Flash 18 times			H7	H7
Compressor phase lack	Flash 19 times			U2	U2
Compressor phase circuit detection error	Flash 20 times			U1	U1
Compressor current protection	Flash 21 times			L9	L9
Compressor overload protection	Flash 22 times			H3	H3
Compressor discharge temperature protection	Flash 23 times			E4	E4
Lack of refrigerant or jam protection	Flash 31 times			F0	F0
Normal operation		Flash 1 time			
Frequency limitation for current protection		Flash 2 times			F8
Oil returning mode		Flash 3 times		F7	F7
Defrosting mode		Flash 4 times		H1	H1
Frequency limitation for IPM temperature protection		Flash 5 times		EU	EU
Frequency limitation for PFC temperature protection		Flash 6 times		EU	EU
Frequency limitation for compressor overload protection		Flash 8 times			LU
Frequency limitation for discharge temp. protection		Flash 9 times			F9
Frequency limitation for low pressure protection		Flash 10 times			Pn
Frequency limitation for high pressure protection		Flash 11 times		F6	F6
Discharge temperature sensor error		Flash 12 times		F5	F5
Outside temperature sensor error		Flash 13 times		F3	F3
Suction temperature sensor error		Flash 15 times			dc
Condenser temperature sensor error		Flash 16 times		A7	A7
Sub−cool temperature sensor error		Flash 17 times			bC
Low pressure sensor error		Flash 18 times			dL
High pressure sensor error		Flash 19 times			e1
Fan motor protection		Flash 20 times		H6	H6
Driving board is connected			Flash 1 time		
Testing board is connected			Flash 2 times		
Computer is connected			Flash 4 times		
Indoor unit 1 is connected			Flash 5 times		
Indoor unit 2 is connected			Flash 6 times		

TROUBLESHOOTING (CON'T)

This unit has on−board diagnostics. Error codes are displayed on the wired remote controller and the outdoor unit microprocessor board with colored LED lights. Table 12 explains the error codes on both.

Table 12—Malfunction Status Table Outdoor Multi−zone Sizes 48−56

ERRORS OF DEFINITION	MAIN CONTROL DISPLAY FOR OUTDOOR UNIT			INDOOR UNIT CODE	TESTING BOARD CODE
	YELLOW LED	RED LED	GREEN LED		
Indoor unit 3 is connected			Flash 7 times		
Indoor unit 4 is connected			Flash 8 times		
Indoor unit 5 is connected			Flash 9 times		
Indoor unit 6 is connected			Flash 10 times		
Indoor unit 7 is connected			Flash 11 times		
Indoor unit 8 is connected			Flash 12 times		
Indoor unit 9 is connected			Flash 13 times		
Indoor anti−freeze protection				E2	E2
Inside temperature sensor error				F1	F1
Evaporator midway temp sensor error				F2	F2
Liquid pipe of Branch Boxes module temperature sensor error				b5	b5
Gas pipe of Branch Boxes module temperature sensor error				b7	b7
Mode conflicts				E7	E7
Communication error	Branch Box 1	Indoor unit A			
		Indoor unit B			
		Indoor unit C			
	Branch Box 2	Indoor unit A			
		Indoor unit B			
		Indoor unit C			
	Branch Box 3	Indoor unit A			
		Indoor unit B			
		Indoor unit C			
Communication error between the main board and driving board					P6
Communication error between the main board and testing board					CE
Indoor unit gas sensor error					Fn
Indoor unit humidity sensor error					L1
Indoor unit water full protection					E9
Jumper terminal error				C5	C5
Power supply phase lack					dJ
Outdoor unit fan motor error					L3
Refrigerant recovery mode				Fo	Fo

BRANCH BOXES

Table 13—Branch Box

ERRORS	INDICATING LED FLASHING TIMES			INDOOR UNIT ERROR CODE	OUTDOOR UNIT ERROR CODE
	YELLOW LED	GREEN LED	RED LED		
Branch Box 1 is connected	Flash 1 time				
Branch Box 2 is connected	Flash 2 times				
Branch Box 3 is connected	Flash 3 times				
Indoor unit A is connected		Flash 1 time			
Indoor unit B is connected		Flash 2 times			
Indoor unit C is connected		Flash 3 times			
Indoor unit A gas tube temperature sensor error			Flash 1 time	b7	b7+ indoor unit address
Indoor unit A liquid tube temperature sensor error			Flash 2 times	b5	b5+ indoor unit address
Indoor unit B gas tube temperature sensor error			Flash 3 times	b7	b7+ indoor unit address
Indoor unit B liquid tube temperature sensor error			Flash 4 times	b5	b5+ indoor unit address
Indoor unit C gas tube temperature sensor error			Flash 5 times	b7	b7+ indoor unit address
Indoor unit C liquid tube temperature sensor error			Flash 6 times	b5	b5+ indoor unit address

©2016 Bryant Heating & Cooling Systems ● 7310 W. Morris St. ● Indianapolis, IN 46231 Edition Date: 04/16 **Catalog No. 619KC−01SI**

Manufacturer reserves the right to discontinue, or change at any time, specifications or designs without notice and without incurring obligations. Replaces: NEW