CA13NA 018–060
Base Series Air Conditioner with Puron® Refrigerant

Carrier
turn to the experts™

Product Data

Carrier's CA13 has been designed utilizing Carrier's Puron refrigerant. The environmentally sound refrigerant allows you to make a responsible decision in the protection of the earth's ozone layer.

This product has been designed and manufactured to meet Energy Star® criteria for energy efficiency when matched with appropriate coil components. Refer to the combination ratings in the Product Data for system combinations that meet Energy Star® guidelines.

INDUSTRY LEADING FEATURES / BENEFITS

Efficiency

- Up to 15 SEER/12.5 EER
- Microtube Technology™ refrigeration system
- Energy Star® combinations

Reliability

- Puron® refrigerant - environmentally sound, won't deplete the ozone layer and low lifetime servce cost.
- Scroll compressor
- Internal pressure relief valve
- Internal thermal overload
- Filter drier

Durability

WeatherArmor™ protection package:

- Solid, durable sheet metal construction
- Dense wire coil guard

Applications

- Long-line - up to 250 feet (76.20 m) total equivalent length, up to 200 feet (60.96 m) condenser above evaporator, or up to 80 ft. (24.38 m) evaporator above condenser (See Longline Guide for more information.)
- Low ambient (down to -20°F/-28.9°C)) with accessory kit

NOTE: Ratings contained in this document are subject to change at any time. Always refer to the AHRI directory (www.ahridirectory.org) for the most up-to-date ratings information.

PRODUCT NUMBER NOMENCLATURE

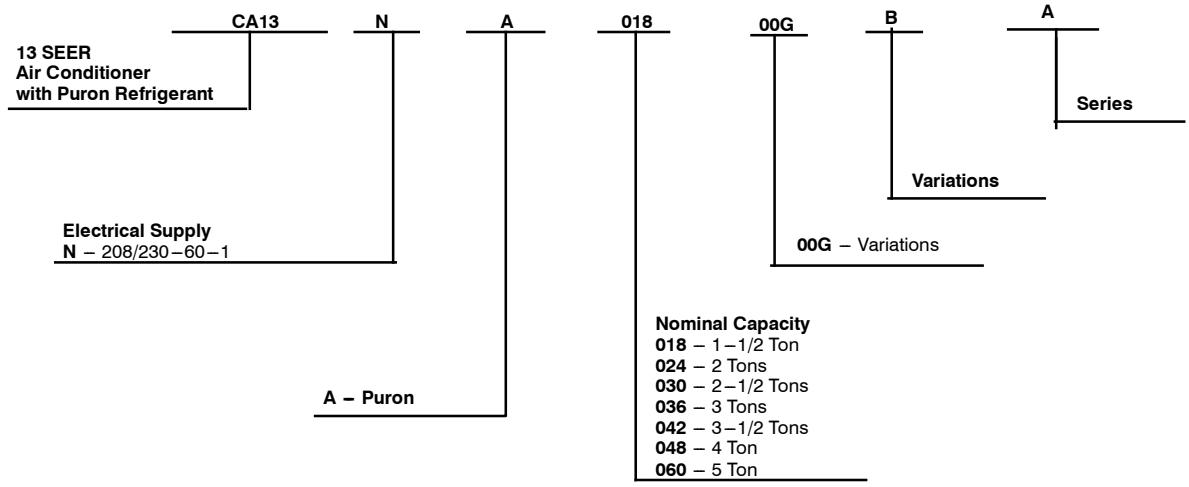

Puron™
the environmentally sound refrigerant

AHRI CERTIFIED™ www.ahridirectory.org

Use of the AHRI Certified TM Mark indicates a manufacturer's participation in the program For verification of certification for individual products, go to www.ahridirectory.org.

c UL US

ENERGY STAR

This product has been designed and manufactured to meet Energy Star® criteria for energy efficiency when matched with appropriate coil components. However, proper refrigerant charge and proper air flow are critical to achieve rated capacity and efficiency. Installation of this product should follow all manufacturing refrigerant charging and air flow instructions. **Failure to confirm proper charge and air flow may reduce energy efficiency and shorten equipment life.**

A-WEIGHTED SOUND POWER (dBA)

UNIT SIZE – SERIES	Standard Rating (dBA)	TYPICAL OCTAVE BAND SPECTRUM (dBA without tone adjustment)						
		125	250	500	1000	2000	4000	8000
18–A.B	72	49.5	59.0	63.0	66.5	62.5	58.5	54.0
24–A.B	76	50.5	61.0	67.0	68.0	65.0	60.0	55.5
30–A.B	74	52.0	61.5	65.5	66.5	64.5	59.5	54.5
36–A.B	77	61.5	63.5	68.5	72.0	68.5	63.0	56.5
42–A.B	78	56.0	64.5	69.5	71.0	66.0	64.0	59.0
48–A.B	78	57.5	65.5	70.5	72.0	68.5	67.0	61.5
60–A.B	78	59.5	69.5	72.5	73.5	71.0	68.0	63.5

NOTE: Tested in accordance with AHRI Standard 270–95 (not listed in AHRI).

METERING DEVICE

UNIT SIZE – SERIES	INDOOOR	REQUIRED SUBCOOLING °F (°C)
18–A.B	TXV*	10 (5.6)
24–A.B		10 (5.6)
30–A.B		10 (5.6)
36–A.B		14 (7.8)
42–A.B		10 (5.6)
48–A.B		15 (8.3)
60–A.B		13 (7.2)

* TXV must be ordered separately when indoor coil is not equipped with a TXV. TXV must be hard–shutoff type.

SPECIFICATIONS (SERIES A)

UNIT SIZE – SERIES	18–A	24–A	30–A	36–A	42–A	48–A	60–A
ELECTRICAL							
Unit Volts—Hertz—Phase	208/230—60—1						
Operating Voltage Range*	197—253						
Compressor—Rated Load Amps	9.0	13.5	12.8	14.1	17.9	19.9	26.4
Locked Rotor Amps	48.0	58.3	64.0	77.0	112.0	109.0	134.0
Condenser Fan Motor— Full Load Amps	0.5	0.8	0.8	1.4	1.1	1.4	1.4
Min Unit Ampacity for Wire Sizing	11.7	17.6	16.8	19.0	23.5	26.2	34.4
Min Wire Size (60°/75° Copper) AWG**	14	14	14	12	12	10	8/10
Max Wire Length (60°/75°) ft (m)‡	66 / 62 (20.1 / 18.9)	44 / 42 (13.4 / 12.8)	46 / 44 (14.0 / 13.4)	70 / 66 (21.3 / 20.1)	52 / 50 (15.8 / 15.2)	74 / 70 (22.6 / 21.3)	89 / 54 (27.1 / 16.5)
Max Branch Circuit Fuse Size†	20	25	25	30	40	40	50
COMPRESSOR AND REFRIGERANT							
Type	Scroll						
Temperature and Current Protection	Internal Line Break						
R–410A Refrigerant— Amount Lb (kg) @ 15 ft (4.6 m)	3.15 (1.43)	3.15 (1.43)	3.67 (1.66)	4.67 (2.12)	6.20 (2.81)	7.67 (3.48)	8.00 (3.63)
Refrigerant Tubes (In. OD) ‡‡ Rated Vapor and Maximum Liquid	3/4 and 3/8			7/8 and 3/8			1–1/8 and 3/8
CONDENSER COIL AND FAN							
Coil Face Area (Sq Ft)	8.4	8.4	9.8	12.60	17.3	21.63	15.14
Fan Motor—HP, Type, and RPM	1/12 PSC and 1100	1/10 PSC and 1100		1/4 PSC and 1100	1/5 PSC and 1100	1/4 PSC and 1100	
Volts—Hertz—Phase	208/230—60—1						
Condenser Airflow (CFM)	1700	2000	2000	2500	3000	3400	3400
OPTIONAL EQUIPMENT							
Cycle Protector	KSACY0101AAA						
Start Assist—PTC Type	KAACS0201PTC				KAACS0201PTC		KAACS0201PTC
Start Assist—Capacitor/Relay Type	KSAHS1501AAA		KSAHS1701AAA	KSAHS1501AAA			
MotorMaster® Control	KSALA0601AAA						
Ball Bearing Fan Motor (RCD)	HC32GE234	HC34GE239		HC40GR232	HC38GE219	HC40GE226	
Low–Pressure Switch	KAALP0401PUR						
High–Pressure Switch	KAAHI0501PUR						
Compressor Sound Hood	KSASH1801COP				KSASH0601COP		KSASH2101COP
Time–Delay Relay	KAATD0101TDR						
Low–A.Bmbient Pressure Switch Kit	KSALA0301410						
Winter Start Control	KAAWS0101AAA						
Evaporator Freeze Thermostat	KAAFT0101AAA						
Compressor Crankcase Heater	KAACH1401AAA				KAACH1201AAA		
Liquid Line Solenoid Valve††	KAALS0201LLS						
TXV (Hard Shutoff)††	KSATX0201PUR			KSATX0301PUR		KSATX0401PUR	KSATX0501PUR
Liquid Line Filter Drier	KH43LG073						KH43LG074

N/A – Not applicable in this application.

* Permissible limits of the voltage range at which unit will operate satisfactorily. Operation outside these limits may result in unit failure.

† Time–delay fuse or circuit breaker.

‡ Length shown is as measured 1 way along wire path between unit and service panel for voltage drop not to exceed 2%.

** If wire is applied at ambient greater than 30° C, consult Table 310–16 of the NEC (ANSI/NFPA 70). The ampacity of nonmetallic–sheathed cable (NM), trade name ROMEX, shall be that of 60° C conductors, per the NEC (ANSI/NFPA 70) Article 336–26.

†† Do not use hard shutoff TXV with liquid solenoid valve.

‡‡ Units are rated with 25 ft (7.6 m) of lineset length. See *Vapor Line Sizing and Cooling Capacity Loss* table when using other sizes and lengths of lineset.

SPECIFICATIONS (SERIES B)

UNIT SIZE – SERIES	18–B	24–B	30–B	36–B	42–B	48–B	60–B
ELECTRICAL							
Unit Volts—Hertz—Phase	208/230—60—1						
Operating Voltage Range*	197—253						
Compressor—Rated Load Amps	9.0	13.5	12.8	14.1	17.9	19.9	26.4
Locked Rotor Amps	48.0	58.3	64.0	77.0	112.0	109.0	134.0
Condenser Fan Motor— Full Load Amps	0.5	0.8	0.8	1.4	1.1	1.4	1.4
Min Unit Ampacity for Wire Sizing	11.8	17.6	16.8	19.0	23.5	26.2	34.2
Min Wire Size (60°/75° Copper) AWG**	14	14	14	12	12	10	8/10
Max Wire Length (60°/75°) ft (m)‡	66 / 62 (20.1 / 18.9)	44 / 42 (13.4 / 12.8)	46 / 44 (14.0 / 13.4)	70 / 66 (21.3 / 20.1)	52 / 50 (15.8 / 15.2)	74 / 70 (22.6 / 21.3)	89 / 54 (27.1 / 16.5)
Max Branch Circuit Fuse Size†	20	25	25	30	40	40	50
COMPRESSOR AND REFRIGERANT							
Type	Scroll						
Temperature and Current Protection	Internal Line Break						
R–410A Refrigerant— Amount Lb (kg) @ 15 ft (4.6 m)	3.50 (1.59)	3.80 (1.72)	4.10 (1.86)	4.67 (2.12)	5.84 (2.65)	7.00 (3.18)	8.19 (3.71)
Refrigerant Tubes (In. OD) ‡‡ Rated Vapor and Maximum Liquid	3/4 and 3/8			7/8 and 3/8			1–1/8 and 3/8
CONDENSER COIL AND FAN							
Coil Face Area (Sq Ft)	8.4	8.4	9.8	12.60	17.3	21.63	15.14
Fan Motor—HP, Type, and RPM	1/12 PSC and 1100	1/10 PSC and 1100		1/4 PSC and 1100	1/5 PSC and 1100	1/4 PSC and 1100	
Volts—Hertz—Phase	208/230—60—1						
Condenser Airflow (CFM)	1700	2000	2000	2500	3000	3400	3400
OPTIONAL EQUIPMENT							
Cycle Protector	KSACY0101AAA						
Start Assist—PTC Type	KAACS0201PTC				KAACS0201PTC		KAACS0201PTC
Start Assist—Capacitor/Relay Type	KSAHS1501AAA		KSAHS1701AAA	KSAHS1501AAA			
MotorMaster® Control	KSALA0601AAA						
Ball Bearing Fan Motor (RCD)	HC32GE234	HC34GE239		HC40GR232	HC38GE219	HC40GE226	
Low–Pressure Switch	KAALP0401PUR						
High–Pressure Switch	KAAHI0501PUR						
Compressor Sound Hood	KSASH1801COP				KSASH0601COP		KSASH2101COP
Time–Delay Relay	KAATD0101TDR						
Low–A.Bmbient Pressure Switch Kit	KSALA0301410						
Winter Start Control	KAAWS0101AAA						
Evaporator Freeze Thermostat	KAAFT0101AAA						
Compressor Crankcase Heater	KAACH1401AAA				KAACH1201AAA		
Liquid Line Solenoid Valve††	KAALS0201LLS						
TXV (Hard Shutoff)††	KSATX0201PUR			KSATX0301PUR		KSATX0401PUR	KSATX0501PUR
Liquid Line Filter Drier	KH43LG073						KH43LG074

N/A – Not applicable in this application.

* Permissible limits of the voltage range at which unit will operate satisfactorily. Operation outside these limits may result in unit failure.

† Time–delay fuse or circuit breaker.

‡ Length shown is as measured 1 way along wire path between unit and service panel for voltage drop not to exceed 2%.

** If wire is applied at ambient greater than 30° C, consult Table 310–16 of the NEC (ANSI/NFPA 70). The ampacity of nonmetallic–sheathed cable (NM), trade name ROMEX, shall be that of 60° C conductors, per the NEC (ANSI/NFPA 70) Article 336–26.

†† Do not use hard shutoff TXV with liquid solenoid valve.

‡‡ Units are rated with 25 ft (7.6 m) of lineset length. See *Vapor Line Sizing and Cooling Capacity Loss* table when using other sizes and lengths of lineset.

REFRIGERANT PIPING LENGTH LIMITATIONS

Liquid Line Sizing and Maximum Total Equivalent Lengths† for Cooling Only Systems with Puron® Refrigerant:

The maximum allowable length of a residential split system depends on the liquid line diameter and vertical separation between indoor and outdoor units.

See Table below for liquid line sizing and maximum lengths :

Maximum Total Equivalent Length
Outdoor Unit BELOW Indoor Unit

Size	Liquid Line Connection	Liquid Line Diam. w/ TXV	AC with Puron Refrigerant Maximum Total Equivalent Length†: Outdoor unit BELOW Indoor Vertical Separation ft (m)								
			0–5 (0–1.5)	6–10 (1.8–3.0)	11–20 (3.4–6.1)	21–A.B (6.4–9.1)	31–40 (9.4–12.2)	41–50 (12.5–15.2)	51–60 (15.5–18.3)	61–70 (18.6–21.3)	71–80 (21.6–24.4)
018 AC with Puron	3/8	1/4	150	150	125	100	100	75	– –	– –	– –
		5/16	250*	250*	250*	250*	250*	250*	250*	225*	150
		3/8	250*	250*	250*	250*	250*	250*	250*	250*	250*
024 AC with Puron	3/8	1/4	75	75	75	50	50	– –	– –	– –	– –
		5/16	250*	250*	250*	250*	250*	225*	175	125	100
		3/8	250*	250*	250*	250*	250*	250*	250*	250*	250*
030 AC with Puron	3/8	1/4	30	– –	– –	– –	– –	– –	– –	– –	– –
		5/16	175	225*	200	175	125	100	75	– –	– –
		3/8	250*	250*	250*	250*	250*	250*	250*	250*	250*
036 AC with Puron	3/8	5/16	175	150	150	100	100	100	75	– –	– –
		3//8	250*	250*	250*	250*	250*	250*	250*	250*	250*
042 AC with Puron	3/8	5/16	125	100	100	75	75	50	– –	– –	– –
		3/8	250*	250*	250*	250*	250*	250*	250*	250*	150
048 AC with Puron	3/8	3/8	250*	250*	250*	250*	250*	250*	230	160	– –
060 AC with Puron	3/8	3/8	250*	250*	250*	225*	190	150	110	– –	– –

*** Maximum actual length not to exceed 200 ft (61 m)**

† Total equivalent length accounts for losses due to elbows or fitting. See the Long Line Guideline for details.

– – = outside acceptable range

Maximum Total Equivalent Length
Outdoor Unit ABOVE Indoor Unit

Size	Liquid Line Connection	Liquid Line Diam. w/ TXV	AC with Puron Refrigerant Maximum Total Equivalent Length†: Outdoor unit ABOVE Indoor Vertical Separation ft (m)							
			25 (7.6)	26–50 (7.9–15.2)	51–75 (15.5–22.9)	76–100 (23.2–A.B. 5)	101–125 (30.8–38.1)	126–150 (38.4–45.7)	151–175 (46.0–53.3)	176–200 (53.6–61.0)
018 AC with Puron	3/8	1/4	175	250*	250*	250*	250*	250*	250*	250*
		5/16	250*	250*	250*	250*	250*	250*	250*	250*
		3/8	250*	250*	250*	250*	250*	250*	250*	250*
024 AC with Puron	3/8	1/4	100	125	175	200	225*	250*	250*	250*
		5/16	250*	250*	250*	250*	250*	250*	250*	250*
		3/8	250*	250*	250*	250*	250*	250*	250*	250*
030 AC with Puron	3/8	1/4	30	– –	– –	– –	– –	– –	– –	– –
		5/16	250*	250*	250*	250*	250*	250*	250*	250*
		3/8	250*	250*	250*	250*	250*	250*	250*	250*
036 AC with Puron	3/8	5/16	225*	250*	250*	250*	250*	250*	250*	250*
		3/8	250*	250*	250*	250*	250*	250*	250*	250*
042 AC with Puron	3/8	5/16	175	200	250*	250*	250*	250*	250*	250*
		3/8	250*	250*	250*	250*	250*	250*	250*	250*
048 AC with Puron	3/8	3/8	250*	250*	250*	250*	250*	250*	250*	250*
060 AC with Puron	3/8	3/8	250*	250*	250*	250*	250*	250*	250*	250*

*** Maximum actual length not to exceed 200 ft (61 m)**

† Total equivalent length accounts for losses due to elbows or fitting. See the Long Line Guideline for details.

– – = outside acceptable range

CA13NA

REFRIGERANT CHARGE ADJUSTMENTS

Liquid Line Size	Puron Charge oz/ft (g/m)
3/8	0.60 (17.74) (Factory charge for lineset = 9 oz / 266.16 g)
5/16	0.40 (11.83)
1/4	0.27 (7.98)

Units are factory charged for 15 ft (4.6 m) of 3/8" liquid line. The factory charge for 3/8" lineset 9 oz. When using other length or diameter liquid lines, charge adjustments are required per the chart above.

Charging Formula:

[(Lineset oz/ft x total length) – (factory charge for lineset)] = charge adjustment

Example 1: System has 15 ft of line set using existing 1/4" liquid line. What charge adjustment is required?

Formula: (.27 oz/ft x 15ft) – (9 oz) = (-4.95) oz.

Net result is to remove 4.95 oz of refrigerant from the system

Example 2: System has 45 ft of existing 5/16" liquid line. What is the charge adjustment?

Formula: (.40 oz/ft. x 45ft) – (9 oz.) = 9 oz.

Net result is to add 9 oz of refrigerant to the system

LONG LINE APPLICATIONS

An application is considered Long Line, when the refrigerant level in the system requires the use of accessories to maintain acceptable refrigerant management for systems reliability. See Accessory Usage Guideline table for required accessories. Defining a system as long line depends on the liquid line diameter, actual length of the tubing, and vertical separation between the indoor and outdoor units.

For Air Conditioner systems, the chart below shows when an application is considered Long Line.

AC WITH PURON® REFRIGERANT LONG LINE DESCRIPTION ft (m)
Beyond these lengths, long line accessories are required

Liquid Line Size	Units On Same Level	Outdoor Below Indoor	Outdoor Above Indoor
1/4	No accessories needed within allowed lengths	No accessories needed within allowed lengths	175 (53.3)
5/16	120 (36.6)	50 (15.2) vertical or 120 (36.6) total	120 (36.6)
3/8	80 (24.4)	35 (10.7) vertical or 80 24.4) total	80 (24.4)

Note: See Long Line Guideline for details

VAPOR LINE SIZING AND COOLING CAPACITY LOSS

Acceptable vapor line diameters provide adequate oil return to the compressor while avoiding excessive capacity loss. The suction line diameters shown in the chart below are acceptable for AC systems with Puron refrigerant:

Vapor Line Sizing and Cooling Capacity Losses — Puron® Refrigerant 1-Stage Air Conditioner Applications

Unit Nominal Size (Btuh)	Maximum Liquid Line Diameters (In. OD)	Vapor Line Diameters (In. OD)	Cooling Capacity Loss (%) Total Equivalent Line Length ft. (m)								
			26–50 (7.9–15.2)	51–80 (15.5–24.4)	81–100 (24.7–A.B.5)	101–125 (30.8–38.1)	126–150 (38.4–45.7)	151–175 (46.0–53.3)	176–200 (53.6–61.0)	201–225 (61.3–68.6)	226–250 (68.9–76.2)
018 1 Stage AC with Puron	3/8	1/2	1	2	3	5	6	7	8	9	11
		5/8	0	1	1	1	2	2	2	3	3
		3/4	0	0	0	0	1	1	1	1	1
024 1 Stage AC with Puron	3/8	5/8	0	1	2	2	3	3	4	5	5
		3/4	0	0	1	1	1	1	1	2	2
		7/8	0	0	0	0	0	1	1	1	1
030 1 Stage AC with Puron	3/8	5/8	1	2	3	3	4	5	6	7	8
		3/4	0	0	1	1	1	2	2	2	3
		7/8	0	0	0	0	1	1	1	1	1
036 1 Stage AC with Puron	3/8	5/8	1	2	4	5	6	8	9	10	12
		3/4	0	1	1	2	2	3	3	4	4
		7/8	0	0	0	1	1	1	1	2	2
042 1 Stage AC with Puron	3/8	3/4	0	1	2	2	3	4	4	5	6
		7/8	0	0	1	1	1	2	2	2	3
		1 1/8	0	0	0	0	0	0	0	0	0
048 1 Stage AC with Puron	3/8	3/4	0	1	2	3	4	5	5	6	7
		7/8	0	0	1	1	2	2	2	3	3
		1 1/8	0	0	0	0	0	0	0	1	1
060 1 Stage AC with Puron	3/8	3/4	1	2	4	5	6	7	9	10	11
		7/8	0	1	2	2	3	4	4	5	5
		1 1/8	0	0	0	1	1	1	1	1	1

Applications in this area may be long line and may have height restrictions. See the *Residential Piping and Long Line Guideline*.

ACCESSORY USAGE GUIDELINE

ACCESSORY	REQUIRED FOR LOWMBIENT COOLING APPLICATIONS (Below 55°F / 22.8°C)	REQUIRED FOR LONG LINE APPLICATIONS* (Over 80 Ft./24.4 m)	REQUIRED FOR SEA COAST APPLICATIONS (Within 2 miles/3.2 km)
Ball Bearing Fan Motor	Yes†	No	No
Compressor Start Assist Capacitor and Relay	Yes	Yes	No
Crankcase Heater	Yes	Yes	No
Evaporator Freeze Thermostat	Yes	No	No
Hard Shut–Off TXV	Yes	Yes	Yes
Liquid Line Solenoid Valve	No	See Long–Line Application Guideline	No
Low Ambient Kit (Pressure Switch)	Yes	No	No
Support Feet	Recommended	No	Recommended
Winter Start Control	Yes	No	No

* For tubing line sets between 80 and 200 ft. (24.4 and 76.2 m) and/or 20 ft. (6.1 m) vertical differential, refer to Residential Split–System Longline Application Guideline.

† Required for Low Ambient Controller (full modulation feature) and MotorMaster® Control only.

Accessory Description and Usage (Listed Alphabetically)

1. Compressor Start Assist - Capacitor and Relay

Start capacitor and relay gives a ”hard” boost to compressor motor at each start up.

Usage Guideline:

Required for reciprocating compressors in the following applications:

Long line

Low ambient cooling

Hard shut off expansion valve on indoor coil

Liquid line solenoid on indoor coil

Required for single-phase scroll compressors in the following applications:

Long line

Low ambient cooling

Suggested for all compressors in areas with a history of low voltage problems.

2. Compressor Start Assist — PTC Type

Solid state electrical device which gives a ”soft” boost to the compressor at each start-up.

Usage Guideline:

Suggested in installations with marginal power supply.

3. Crankcase Heater

An electric resistance heater which mounts to the base of the compressor to keep the lubricant warm during off cycles. Improves compressor lubrication on restart and minimizes the chance of liquid slugging.

Usage Guideline:

Required in low ambient cooling applications.

Required in long line applications.

4. Cycle Protector

The cycle protector is designed to prevent compressor short cycling. This control provides an approximate 5-minute delay after power to the compressor has been interrupted for any reason, including power outage, protector control trip, thermostat jiggling, or normal cycling.

Suggested in all commercial applications.

5. Evaporator Freeze Thermostat

An SPST temperature actuated switch that stops unit operation when evaporator reaches freeze-up conditions.

Usage Guideline:

Required when low ambient kit has been added.

6. Low Ambient Pressure Switch Kit

A long life pressure switch which is mounted to outdoor unit service valve. It is designed to cycle the outdoor fan motor in order to maintain head pressure within normal operating limits (approximately 100 psig to 225 psig). The control will maintain working head pressure at low ambient temperatures down to 0°F/-17.8°C when properly installed.

Usage Guideline:

A Low Ambient Pressure Switch or MotorMaster® Low Ambient Controller must be used when cooling operation is used at outdoor temperatures below 55°F (12.8°C).

Suggested for all commercial applications.

7. Support Feet

Four stick-on plastic feet that raise the unit 4 in. (101.6 mm) above the mounting pad. This allows sand, dirt, and other debris to be flushed from the unit base, minimizing corrosion.

Usage Guideline:

Suggested in the following applications:

Coastal installations.

Windy areas or where debris is normally circulating.

Rooftop installations.

For improved sound ratings.

8. Thermostatic Expansion Valve (TXV)

A modulating flow-control valve which meters refrigerant liquid flow rate into the evaporator in response to the superheat of the refrigerant gas leaving the evaporator.

Kit includes valve, adapter tubes, and external equalizer tube. Hard shut off types are available.

NOTE: When using a hard shut off TXV with single phase reciprocating compressors, a Compressor Start Assist Capacitor and Relay is required.

Usage Guideline:

Required to achieve AHRI ratings in certain equipment combinations. Refer to combination ratings.

Hard shut off TXV or LLS required in air conditioner long line applications.

Required for use on all zoning systems.

9. Winter Start Control

This control is designed to alleviate nuisance opening of the low-pressure switch by bypassing it for the first 3 minutes of operation.

DIMENSIONS - ENGLISH

UNIT	SERIES	ELECTRICAL CHARACTERISTICS				A	B	C	D	E	F	G	K	L	M	N	P	OPERATING WEIGHT (lbs)	SHIPPING WEIGHT (lbs)	SHIPPING DIMENSIONS (L x W x H)
CA13NA018	A,B	X	O	O	O	23 1/8"	25 5/16"	3 3/4"	3/4"	4 7/16"	18 1/16"	7 13/16"	2 13/16"	1/2"	16 1/2"	15"	12"	107	130	24 1/4" X 27 3/8" X 33 1/2"
CA13NA024	A,B	X	O	O	O	23 1/8"	25 5/16"	3 3/4"	3/4"	4 7/16"	18 1/16"	7 13/16"	2 13/16"	1/2"	16 1/2"	15"	12"	110	134	24 1/4" X 27 3/8" X 33 1/2"
CA13NA030	A,B	X	O	O	O	23 1/8"	28 11/16"	3 3/4"	3/4"	4 7/16"	18 1/16"	7 13/16"	2 13/16"	1/2"	16 1/2"	15"	14"	111	136	24 1/4" X 27 3/8" X 33 1/2"
CA13NA036	A,B	X	O	O	O	23 1/8"	35 3/16"	3 7/8"	7/8"	4 7/16"	18 1/16"	7 13/16"	2 13/16"	1/2"	16 1/2"	15"	16"	122	135	24 1/4" X 27 3/8" X 40"
CA13NA042	A,B	X	O	O	O	31 3/16"	32 5/16"	3 7/8"	7/8"	6 9/16"	24 11/16"	9 1/8"	2 15/16"	5/8"	15 3/4"	16 1/4"	13 3/4"	180	208	32 3/8" X 35 1/2" X 35 15/16"
CA13NA048	A,B	X	O	O	O	31 3/16"	35 3/4"	3 7/8"	7/8"	6 9/16"	24 11/16"	9 1/8"	2 15/16"	5/8"	14 3/4"	15 3/8"	15"	178	215	32 3/8" X 35 1/2" X 39 3/8"
CA13NA060	A,B	X	O	O	O	31 3/16"	25 1/2"	3 7/8"	7/8"	6 9/16"	24 11/16"	9 1/8"	2 15/16"	5/8"	14 1/8"	15 3/8"	11 3/4"	184	218	32 3/8" X 35 1/2" X 32 9/16"
		208-230-1-60	230-1-60	208/230-3-60	460-3-60															

X = YES
O = NO

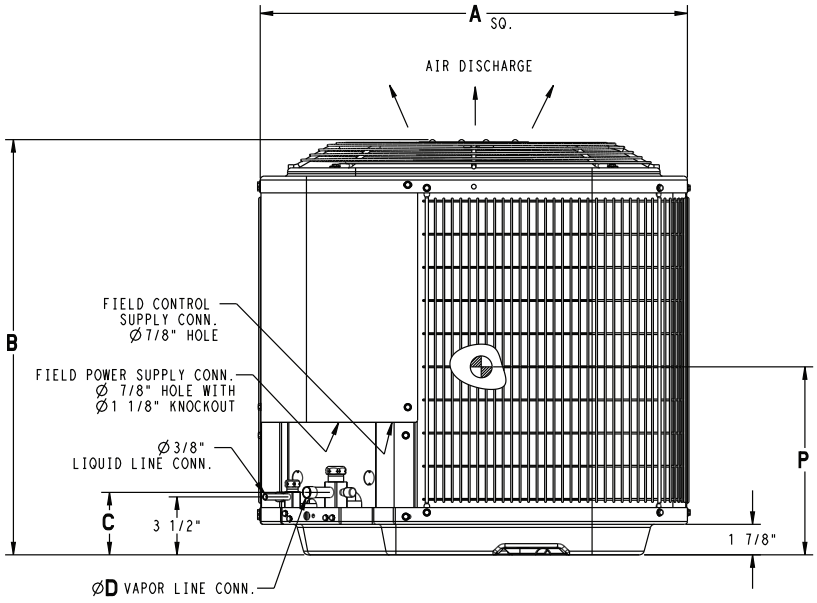

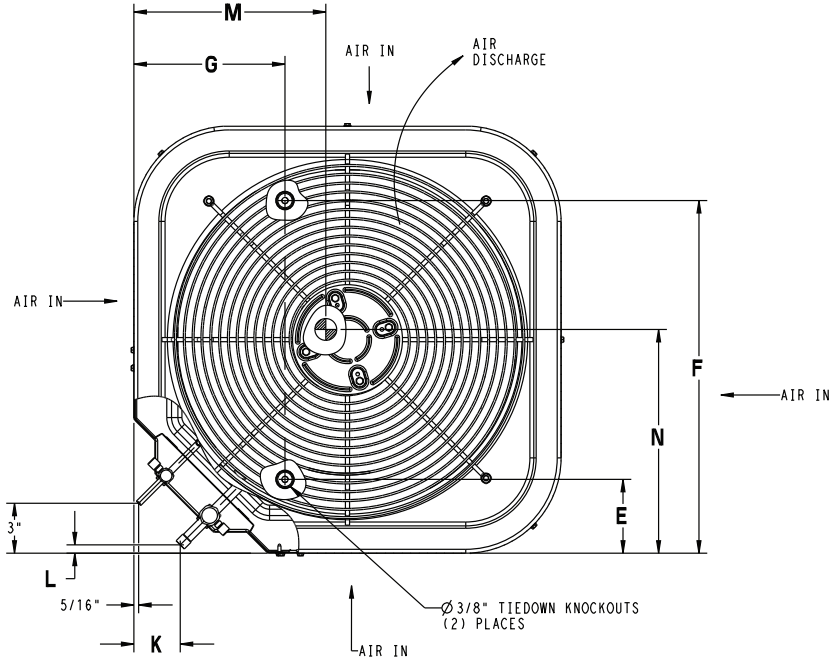

UNIT SIZE	MINIMUM MOUNTING PAD DIMENSIONS
18,24,30,36	23 1/2" X 23 1/2"
-	26" X 26"
42,48,60	31 1/2" X 31 1/2"
-	35" X 35"

DIMENSIONS - SI

UNIT	SERIES	ELECTRICAL CHARACTERISTICS				A	B	C	D	E	F	G	K	L	M	N	P	OPERATING WEIGHT (Kgs)	SHIPPING WEIGHT (Kgs)	SHIPPING DIMENSIONS (L x W x H)
CA13NA018	A,B	X	O	O	O	587.3	643.0	95.2	19.0	112.7	458.8	198.4	71.4	12.7	419.1	381.0	304.8	48.5	59.0	616.0 X 695.3 X 850.9
CA13NA024	A,B	X	O	O	O	587.3	643.0	95.2	19.0	112.7	458.8	198.4	71.4	12.7	419.1	381.0	304.8	49.9	60.8	616.0 X 695.3 X 850.9
CA13NA030	A,B	X	O	O	O	587.3	728.7	95.2	19.0	112.7	458.8	198.4	71.4	12.7	419.1	381.0	355.6	50.3	61.7	616.0 X 695.3 X 850.9
CA13NA036	A,B	X	O	O	O	587.4	893.8	98.4	22.2	112.7	458.8	198.4	71.4	12.7	419.1	381.0	406.4	55.3	63.0	616.0 X 695.3 X 1016.0
CA13NA042	A,B	X	O	O	O	792.2	820.8	98.4	22.2	166.7	627.1	231.8	74.6	15.9	400.0	412.8	349.2	81.6	94.3	822.3 X 901.7 X 912.8
CA13NA048	A,B	X	O	O	O	792.2	908.0	98.4	22.2	166.7	627.1	231.8	74.6	15.9	374.6	390.5	381.0	81.0	97.7	822.3 X 901.7 X 1000.1
CA13NA060	A,B	X	O	O	O	792.2	647.7	98.4	22.2	166.7	627.1	231.8	74.6	15.9	358.8	390.5	298.4	83.5	98.9	822.3 X 901.7 X 827.1

208-230-1-60	230-1-60	208/230-3-60	460-3-60

X = YES
O = NO

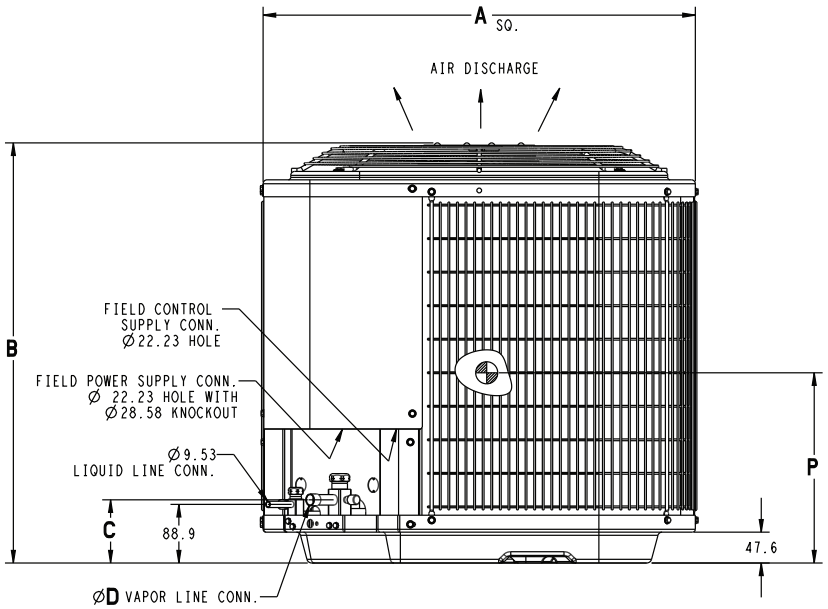

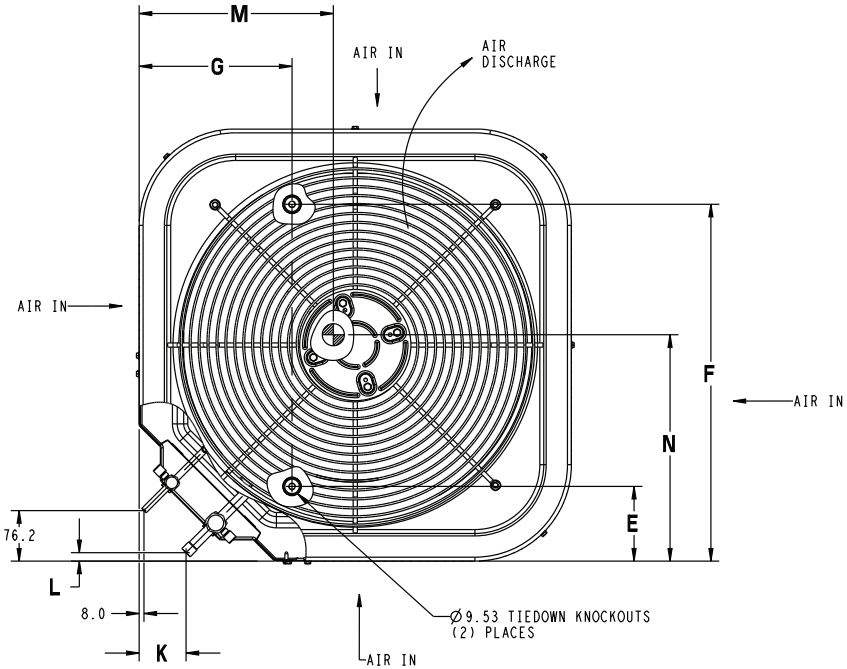

UNIT SIZE	MINIMUM MOUNTING PAD DIMENSIONS
18,24,30,36	596.9 X 596.9
-	660.4 X 660.4
42,48,60	800.1 X 800.1
-	889.0 X 889.0

CLEARANCES

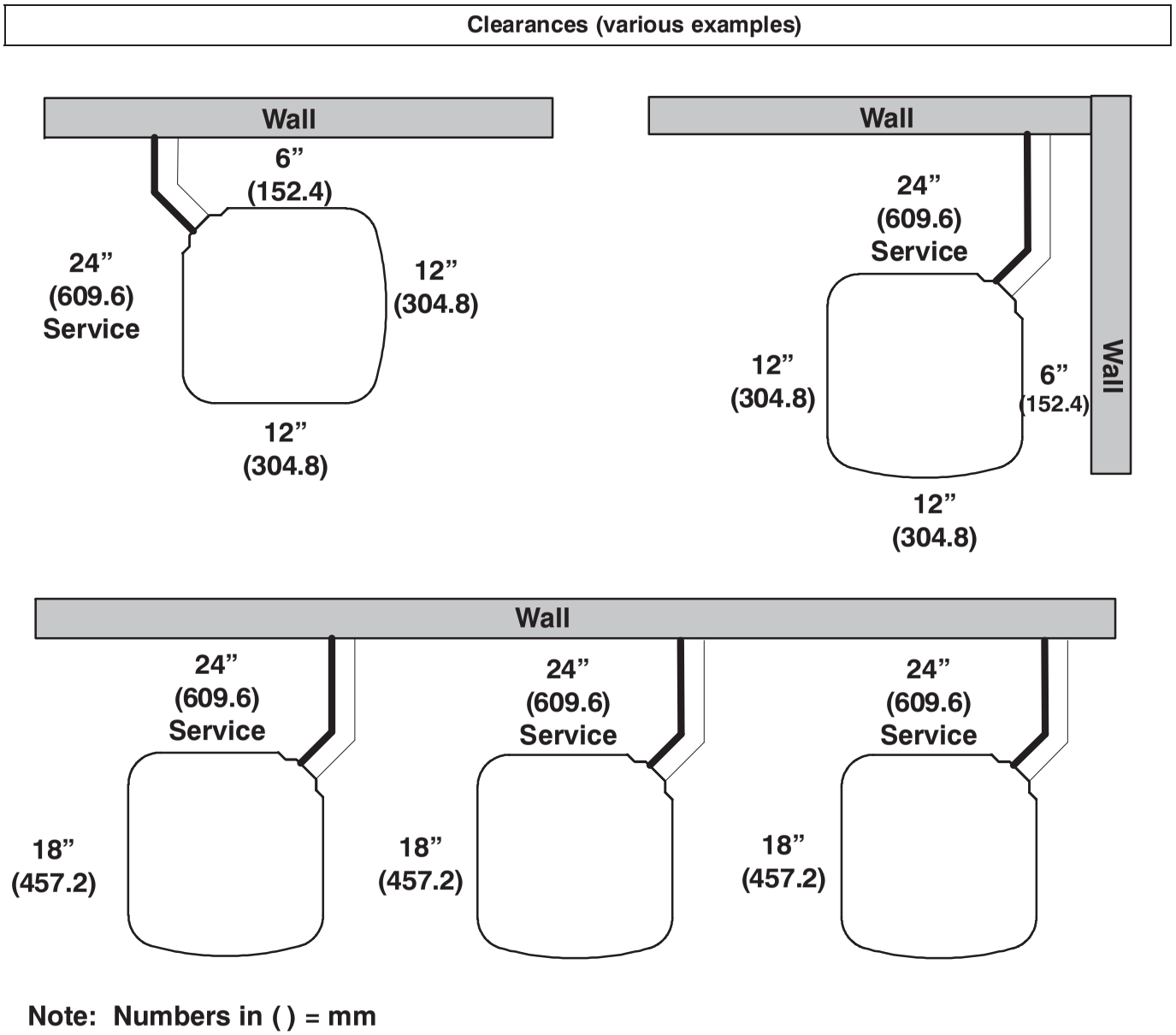

Note: Numbers in ( ) = mm

IMPORTANT: When installing multiple units in an alcove, roof well, or partially enclosed area, ensure there is adequate ventilation to prevent re-circulation of discharge air.

AHRI COMBINATION RATINGS*

AHRI Ref. No.	Model Number	Indoor Model	Furnace Model	Capacity	EER	SEER
4540695	CA13NA018****(A,B)	†CAP**1814A**+TDR		17,600	10.9	13.0
4540696	CA13NA018****(A,B)	CAP**1814A**	58CV(A,X)070−12	17,500	12.0	14.5
4540697	CA13NA018****(A,B)	CAP**1814A**	58PH*045−08	17,800	12.0	14.5
4735781	CA13NA018****(A,B)	CAP**1814A**	59*P5A040E14**10	17,400	11.8	14.2
4540699	CA13NA018****(A,B)	CAP**2414A**	58CV(A,X)070−12	17,800	12.2	14.5
4540700	CA13NA018****(A,B)	CAP**2414A**	58PH*045−08	18,000	12.2	14.5
4735782	CA13NA018****(A,B)	CAP**2414A**	59*P5A040E14**10	17,800	12.0	14.5
4540698	CA13NA018****(A,B)	CAP**2414A**+TDR		17,900	11.0	13.2
4540704	CA13NA018****(A,B)	CAP**2417A**	58CV(A,X)090−16	17,800	12.2	14.5
4540706	CA13NA018****(A,B)	CAP**2417A**	58ME(B,C)060−12	18,000	12.5	15.0
4540705	CA13NA018****(A,B)	CAP**2417A**	58MEB040−12	18,000	12.5	15.0
4540702	CA13NA018****(A,B)	CAP**2417A**	58MV(B,C)060−14	17,800	12.2	14.5
4540703	CA13NA018****(A,B)	CAP**2417A**	58UVB060−14	17,800	12.2	14.5
4540708	CA13NA018****(A,B)	CAP**2417A**	58VLR105−12	17,800	12.0	14.5
4540707	CA13NA018****(A,B)	CAP**2417A**	58VMR105−12	17,800	12.0	14.5
4735783	CA13NA018****(A,B)	CAP**2417A**	59*N*A060V17**14	17,800	12.0	14.5
4735784	CA13NA018****(A,B)	CAP**2417A**	59*N*A080V17**14	17,800	12.0	14.5
4735785	CA13NA018****(A,B)	CAP**2417A**	59*P5A040E14**10	17,800	12.0	14.5
4540710	CA13NA018****(A,B)	CAP**2417A**	OVLAAB036098	17,800	12.0	14.5
4540709	CA13NA018****(A,B)	CAP**2417A**	OVMAAB036098	17,800	12.0	14.5
4540701	CA13NA018****(A,B)	CAP**2417A**+TDR		17,900	11.0	13.2
4640598	CA13NA018****(A,B)	CAP**3619A**+TDR		17,600	11.0	13.0
4540741	CA13NA018****(A,B)	CNPH*2417A**	58CV(A,X)070−12	17,800	12.2	14.5
4540742	CA13NA018****(A,B)	CNPH*2417A**	58CV(A,X)090−16	17,800	12.2	14.5
4540746	CA13NA018****(A,B)	CNPH*2417A**	58HDV040−−12	18,000	12.0	14.0
4540747	CA13NA018****(A,B)	CNPH*2417A**	58HDV060−−12	18,000	12.0	14.5
4540745	CA13NA018****(A,B)	CNPH*2417A**	58ME(B,C)060−12	18,000	12.2	15.0
4540744	CA13NA018****(A,B)	CNPH*2417A**	58MEB040−12	18,000	12.2	15.0
4540739	CA13NA018****(A,B)	CNPH*2417A**	58MV(B,C)060−14	17,800	12.2	14.5
4540740	CA13NA018****(A,B)	CNPH*2417A**	58MV(B,C)080−14	17,700	12.2	14.5
4540738	CA13NA018****(A,B)	CNPH*2417A**	58MVB040−14	17,800	12.2	14.5
4540743	CA13NA018****(A,B)	CNPH*2417A**	58PH*045−08	17,800	12.2	14.5
4540749	CA13NA018****(A,B)	CNPH*2417A**	58VLR105−12	18,000	12.0	14.5
4540748	CA13NA018****(A,B)	CNPH*2417A**	58VMR105−12	17,700	12.0	14.5
4735794	CA13NA018****(A,B)	CNPH*2417A**	59*N*A060V17**14	17,900	12.0	14.5
4735795	CA13NA018****(A,B)	CNPH*2417A**	59*N*A080V17**14	17,800	12.0	14.5
4735796	CA13NA018****(A,B)	CNPH*2417A**	59*P5A040E14**10	17,700	11.8	14.2
4540751	CA13NA018****(A,B)	CNPH*2417A**	OVLAAB036098	17,800	12.2	14.5
4540750	CA13NA018****(A,B)	CNPH*2417A**	OVMAAB036098	18,000	12.2	14.5
4540737	CA13NA018****(A,B)	CNPH*2417A**+TDR		17,900	11.0	13.2
4540712	CA13NA018****(A,B)	CNPV*1814A**	58CV(A,X)070−12	17,500	12.0	14.5
4540713	CA13NA018****(A,B)	CNPV*1814A**	58PH*045−08	17,800	12.0	14.5
4735786	CA13NA018****(A,B)	CNPV*1814A**	59*P5A040E14**10	17,500	11.8	14.2
4540711	CA13NA018****(A,B)	CNPV*1814A**+TDR		17,600	10.9	13.0
4540717	CA13NA018****(A,B)	CNPV*1917A**	58CV(A,X)090−16	18,000	12.0	14.5
4540719	CA13NA018****(A,B)	CNPV*1917A**	58ME(B,C)060−12	18,000	12.0	14.5
4540718	CA13NA018****(A,B)	CNPV*1917A**	58MEB040−12	18,000	12.0	14.5
4540715	CA13NA018****(A,B)	CNPV*1917A**	58MV(B,C)060−14	18,000	12.0	14.5
4540716	CA13NA018****(A,B)	CNPV*1917A**	58UVB060−14	18,000	12.0	14.5
4540721	CA13NA018****(A,B)	CNPV*1917A**	58VLR105−12	18,000	12.0	15.0
4540720	CA13NA018****(A,B)	CNPV*1917A**	58VMR105−12	17,800	12.0	14.5
4735787	CA13NA018****(A,B)	CNPV*1917A**	59*N*A060V17**14	18,000	12.0	14.5
4735788	CA13NA018****(A,B)	CNPV*1917A**	59*N*A080V17**14	17,900	12.4	15.0
4735789	CA13NA018****(A,B)	CNPV*1917A**	59*P5A040E14**10	17,900	12.0	14.5
4540723	CA13NA018****(A,B)	CNPV*1917A**	OVLAAB036098	18,000	12.2	14.5
4540722	CA13NA018****(A,B)	CNPV*1917A**	OVMAAB036098	18,000	12.2	14.5
4540714	CA13NA018****(A,B)	CNPV*1917A**+TDR		18,000	11.0	13.0
4540725	CA13NA018****(A,B)	CNPV*2414A**	58CV(A,X)070−12	17,800	12.2	14.5
4540726	CA13NA018****(A,B)	CNPV*2414A**	58PH*045−08	18,000	12.2	14.5
4735790	CA13NA018****(A,B)	CNPV*2414A**	59*P5A040E14**10	17,700	11.8	14.2
4540724	CA13NA018****(A,B)	CNPV*2414A**+TDR		17,900	11.0	13.2
4540730	CA13NA018****(A,B)	CNPV*2417A**	58CV(A,X)090−16	17,800	12.2	14.5
4640599	CA13NA018****(A,B)	CNPV*2417A**	58HDV040−−12	18,000	12.0	14.0
4540732	CA13NA018****(A,B)	CNPV*2417A**	58ME(B,C)060−12	18,000	12.2	15.0
4540731	CA13NA018****(A,B)	CNPV*2417A**	58MEB040−12	18,000	12.2	15.0
4540728	CA13NA018****(A,B)	CNPV*2417A**	58MV(B,C)060−14	17,800	12.2	14.5
4540729	CA13NA018****(A,B)	CNPV*2417A**	58UVB060−14	17,800	12.2	14.5
4540734	CA13NA018****(A,B)	CNPV*2417A**	58VLR105−12	18,000	12.0	14.5
4540733	CA13NA018****(A,B)	CNPV*2417A**	58VMR105−12	17,700	12.0	14.5
4735791	CA13NA018****(A,B)	CNPV*2417A**	59*N*A060V17**14	17,900	12.0	14.5
4735792	CA13NA018****(A,B)	CNPV*2417A**	59*N*A080V17**14	17,800	12.0	14.5
4735793	CA13NA018****(A,B)	CNPV*2417A**	59*P5A040E14**10	17,700	11.8	14.2
4540736	CA13NA018****(A,B)	CNPV*2417A**	OVLAAB036098	17,800	12.2	14.5

See notes on page 39

AHRI COMBINATION RATINGS* CONTINUED

AHRI Ref. No.	Model Number	Indoor Model	Furnace Model	Capacity	EER	SEER
4540735	CA13NA018****(A,B)	CNPV*2417A**	OVMAAB036098	18,000	12.2	14.5
4540727	CA13NA018****(A,B)	CNPV*2417A**+TDR		18,000	11.0	13.2
4540756	CA13NA018****(A,B)	CSPH*2412A**	58CV(A,X)070−12	17,900	12.2	14.5
4540757	CA13NA018****(A,B)	CSPH*2412A**	58CV(A,X)090−16	17,900	12.2	14.5
4540761	CA13NA018****(A,B)	CSPH*2412A**	58HDV040−−12	18,400	12.0	14.5
4540762	CA13NA018****(A,B)	CSPH*2412A**	58HDV060−−12	18,400	12.0	14.5
4540760	CA13NA018****(A,B)	CSPH*2412A**	58ME(B,C)060−12	18,000	12.2	15.0
4540759	CA13NA018****(A,B)	CSPH*2412A**	58MEB040−12	18,000	12.2	15.0
4540754	CA13NA018****(A,B)	CSPH*2412A**	58MV(B,C)060−14	17,900	12.2	14.5
4540755	CA13NA018****(A,B)	CSPH*2412A**	58MV(B,C)080−14	17,900	12.2	14.5
4540753	CA13NA018****(A,B)	CSPH*2412A**	58MVB040−14	17,800	12.2	14.5
4540758	CA13NA018****(A,B)	CSPH*2412A**	58PH*045−08	18,000	12.2	14.5
4542267	CA13NA018****(A,B)	CSPH*2412A**	58VLR105−12	18,000	12.0	14.5
4540763	CA13NA018****(A,B)	CSPH*2412A**	58VMR105−12	17,800	12.0	14.5
4735797	CA13NA018****(A,B)	CSPH*2412A**	59*N*A060V17**14	18,000	12.0	14.5
4735798	CA13NA018****(A,B)	CSPH*2412A**	59*N*A080V17**14	17,900	12.0	14.5
4735799	CA13NA018****(A,B)	CSPH*2412A**	59*P5A040E14**10	17,800	12.0	14.5
4540765	CA13NA018****(A,B)	CSPH*2412A**	OVLAAB036098	18,000	12.2	14.5
4540764	CA13NA018****(A,B)	CSPH*2412A**	OVMAAB036098	18,000	12.2	14.5
4540752	CA13NA018****(A,B)	CSPH*2412A**+TDR		17,900	11.0	13.2
4540775	CA13NA018****(A,B)	FB4CNF018		17,800	12.0	14.5
4540774	CA13NA018****(A,B)	FB4CNF018+TXV		17,800	12.0	14.5
4540777	CA13NA018****(A,B)	FB4CNF024		17,800	12.0	14.5
4540776	CA13NA018****(A,B)	FB4CNF024+TXV		17,800	12.0	14.5
4540779	CA13NA018****(A,B)	FB4CNF030		18,300	11.2	13.0
4540778	CA13NA018****(A,B)	FB4CNF030+TXV		18,300	11.2	13.5
4540768	CA13NA018****(A,B)	FE4ANF002+UI		18,200	12.2	15.0
4540769	CA13NA018****(A,B)	FF1ENP018		17,500	10.9	13.0
4540770	CA13NA018****(A,B)	FF1ENP019		18,000	12.0	14.0
4540771	CA13NA018****(A,B)	FF1ENP024		17,500	11.0	13.2
4540772	CA13NA018****(A,B)	FF1ENP025		18,000	12.2	14.5
4540773	CA13NA018****(A,B)	FV4CNF002		17,300	12.2	14.5
4640600	CA13NA018****(A,B)	FX4DN(B,F)031		18,200	12.0	14.5
4540766	CA13NA018****(A,B)	FX4DNF019		18,000	12.0	14.5
4540767	CA13NA018****(A,B)	FX4DNF025		18,200	12.0	14.5
4540781	CA13NA018****(A,B)	FY5BNF018		17,800	11.0	13.5
4540780	CA13NA018****(A,B)	FY5BNF018+TXV		17,800	11.0	13.5
4540783	CA13NA018****(A,B)	FY5BNF024		17,800	11.0	13.5
4540782	CA13NA018****(A,B)	FY5BNF024+TXV		17,800	11.0	13.5
4540784	CA13NA024****(A,B)	†CAP**2414A**+TDR		23,000	11.0	13.0
4540785	CA13NA024****(A,B)	CAP**2414A**	58CV(A,X)070−12	22,800	12.0	14.0
4540786	CA13NA024****(A,B)	CAP**2414A**	58PH*045−08	23,000	11.7	14.0
4735800	CA13NA024****(A,B)	CAP**2414A**	59*P5A040E14**10	23,000	11.0	13.3
4540790	CA13NA024****(A,B)	CAP**2417A**	58CV(A,X)090−16	23,000	12.2	14.5
4540792	CA13NA024****(A,B)	CAP**2417A**	58ME(B,C)060−12	23,400	12.2	14.5
4540793	CA13NA024****(A,B)	CAP**2417A**	58ME(B,C)080−12	23,200	12.2	14.5
4540791	CA13NA024****(A,B)	CAP**2417A**	58MEB040−12	23,400	12.2	14.5
4540788	CA13NA024****(A,B)	CAP**2417A**	58MV(B,C)060−14	23,200	12.2	14.5
4540789	CA13NA024****(A,B)	CAP**2417A**	58UVB060−14	23,200	12.2	14.5
4540795	CA13NA024****(A,B)	CAP**2417A**	58VLR105−12	23,200	12.0	14.5
4540794	CA13NA024****(A,B)	CAP**2417A**	58VMR105−12	22,800	12.0	14.0
4735801	CA13NA024****(A,B)	CAP**2417A**	59*N*A060V17**14	23,000	12.0	14.5
4735802	CA13NA024****(A,B)	CAP**2417A**	59*N*A080V17**14	22,800	12.0	14.5
4735803	CA13NA024****(A,B)	CAP**2417A**	59*P5A040E14**10	23,000	11.0	13.3
4735804	CA13NA024****(A,B)	CAP**2417A**	59*P5A060E17**14	23,000	12.0	14.5
4540797	CA13NA024****(A,B)	CAP**2417A**	OVLAAB036098	23,200	11.7	14.0
4540796	CA13NA024****(A,B)	CAP**2417A**	OVMAAB036098	23,200	11.7	14.0
4540798	CA13NA024****(A,B)	CAP**2417A**	OVMAAB042112	23,000	12.0	14.5
4540787	CA13NA024****(A,B)	CAP**2417A**+TDR		23,000	11.0	13.0
4540800	CA13NA024****(A,B)	CAP**3014A**	58CV(A,X)070−12	23,000	12.0	14.5
4540801	CA13NA024****(A,B)	CAP**3014A**	58PH*045−08	23,400	12.0	14.0
4735805	CA13NA024****(A,B)	CAP**3014A**	59*P5A040E14**10	23,200	11.2	13.5
4540799	CA13NA024****(A,B)	CAP**3014A**+TDR		23,200	11.0	13.0
4540805	CA13NA024****(A,B)	CAP**3017A**	58CV(A,X)090−16	23,200	12.2	14.5
4540807	CA13NA024****(A,B)	CAP**3017A**	58ME(B,C)060−12	23,800	12.2	14.5
4540808	CA13NA024****(A,B)	CAP**3017A**	58ME(B,C)080−12	23,600	12.2	14.5
4540806	CA13NA024****(A,B)	CAP**3017A**	58MEB040−12	23,600	12.2	14.5
4540803	CA13NA024****(A,B)	CAP**3017A**	58MV(B,C)060−14	23,400	12.2	14.5
4540804	CA13NA024****(A,B)	CAP**3017A**	58UVB060−14	23,400	12.2	14.5
4540810	CA13NA024****(A,B)	CAP**3017A**	58VLR105−12	23,400	12.0	14.5
4540809	CA13NA024****(A,B)	CAP**3017A**	58VMR105−12	23,200	12.0	14.5
4735806	CA13NA024****(A,B)	CAP**3017A**	59*N*A060V17**14	23,200	12.0	14.5

See notes on page 39

AHRI COMBINATION RATINGS* CONTINUED

AHRI Ref. No.	Model Number	Indoor Model	Furnace Model	Capacity	EER	SEER
4735807	CA13NA024****(A,B)	CAP**3017A**	59*N*A080V17**14	23,000	12.0	14.5
4735808	CA13NA024****(A,B)	CAP**3017A**	59*P5A040E14**10	23,400	11.2	13.5
4735809	CA13NA024****(A,B)	CAP**3017A**	59*P5A060E17**14	23,200	12.0	14.5
4540812	CA13NA024****(A,B)	CAP**3017A**	OVLAAB036098	23,400	12.0	14.5
4540811	CA13NA024****(A,B)	CAP**3017A**	OVMAAB036098	23,400	12.0	14.0
4540813	CA13NA024****(A,B)	CAP**3017A**	OVMAAB042112	23,200	12.0	14.5
4540802	CA13NA024****(A,B)	CAP**3017A**+TDR		23,200	11.0	13.0
4640602	CA13NA024****(A,B)	CAP**3617A**	58PH*045−08	23,400	12.2	14.5
4640601	CA13NA024****(A,B)	CAP**3617A**+TDR		23,200	11.0	13.0
4640607	CA13NA024****(A,B)	CAP**3619A**	58HDV040−−12	23,400	11.5	14.0
4640608	CA13NA024****(A,B)	CAP**3619A**	58HDV060−−12	23,400	11.5	14.0
4640606	CA13NA024****(A,B)	CAP**3619A**+TDR		23,200	11.0	13.0
4640604	CA13NA024****(A,B)	CAP**3621A**	58MV(B,C)080−14	23,000	12.0	14.5
4640605	CA13NA024****(A,B)	CAP**3621A**	58UVB080−14	23,000	12.0	14.5
4735854	CA13NA024****(A,B)	CAP**3621A**	59*N*A060V17**14	23,200	12.0	14.5
4735855	CA13NA024****(A,B)	CAP**3621A**	59*N*A080V17**14	23,200	12.0	14.5
4735856	CA13NA024****(A,B)	CAP**3621A**	59*N*A100V21**20	23,400	12.0	14.5
4640603	CA13NA024****(A,B)	CAP**3621A**+TDR		23,200	11.0	13.0
4540863	CA13NA024****(A,B)	CNPH*2417A**	58CV(A,X)070−12	22,800	11.7	14.0
4540864	CA13NA024****(A,B)	CNPH*2417A**	58CV(A,X)090−16	22,800	12.0	14.0
4540865	CA13NA024****(A,B)	CNPH*2417A**	58CV(A,X)110−20	22,800	11.7	14.0
4540866	CA13NA024****(A,B)	CNPH*2417A**	58CV(A,X)135−22	22,800	12.0	14.0
4540867	CA13NA024****(A,B)	CNPH*2417A**	58CV(A,X)155−22	22,800	12.0	14.0
4540872	CA13NA024****(A,B)	CNPH*2417A**	58HDV040−−12	23,000	11.5	13.5
4540873	CA13NA024****(A,B)	CNPH*2417A**	58HDV060−−12	23,200	11.5	13.5
4540874	CA13NA024****(A,B)	CNPH*2417A**	58HDV080−−20	23,400	11.7	14.0
4540875	CA13NA024****(A,B)	CNPH*2417A**	58HDV100−−20	23,400	11.7	14.0
4540870	CA13NA024****(A,B)	CNPH*2417A**	58ME(B,C)060−12	23,200	12.0	14.5
4540871	CA13NA024****(A,B)	CNPH*2417A**	58ME(B,C)080−12	23,200	12.0	14.5
4540869	CA13NA024****(A,B)	CNPH*2417A**	58MEB040−12	23,200	12.0	14.5
4540858	CA13NA024****(A,B)	CNPH*2417A**	58MV(B,C)060−14	23,200	12.0	14.0
4540859	CA13NA024****(A,B)	CNPH*2417A**	58MV(B,C)080−14	22,800	12.0	14.0
4540860	CA13NA024****(A,B)	CNPH*2417A**	58MV(B,C)080−20	22,600	12.0	14.0
4540861	CA13NA024****(A,B)	CNPH*2417A**	58MV(B,C)100−20	22,800	12.0	14.0
4540862	CA13NA024****(A,B)	CNPH*2417A**	58MV(B,C)120−20	23,000	12.0	14.0
4540857	CA13NA024****(A,B)	CNPH*2417A**	58MVB040−14	22,800	11.7	14.0
4540868	CA13NA024****(A,B)	CNPH*2417A**	58PH*045−08	23,000	11.7	14.0
4540877	CA13NA024****(A,B)	CNPH*2417A**	58VLR105−12	23,200	12.0	14.0
4540876	CA13NA024****(A,B)	CNPH*2417A**	58VMR105−12	22,800	11.7	14.0
4735824	CA13NA024****(A,B)	CNPH*2417A**	59*N*A060V17**14	22,800	11.8	14.2
4735825	CA13NA024****(A,B)	CNPH*2417A**	59*N*A080V17**14	22,800	12.0	14.5
4735826	CA13NA024****(A,B)	CNPH*2417A**	59*N*A100V21**20	23,200	12.0	14.5
4735827	CA13NA024****(A,B)	CNPH*2417A**	59*N*A120V24**22	23,000	12.0	14.5
4735828	CA13NA024****(A,B)	CNPH*2417A**	59*P5A040E14**10	23,000	11.0	13.3
4735829	CA13NA024****(A,B)	CNPH*2417A**	59*P5A060E17**14	22,800	12.0	14.5
4540879	CA13NA024****(A,B)	CNPH*2417A**	OVLAAB036098	23,000	11.7	14.0
4540878	CA13NA024****(A,B)	CNPH*2417A**	OVMAAB036098	23,000	11.7	14.0
4540880	CA13NA024****(A,B)	CNPH*2417A**	OVMAAB042112	23,000	12.0	14.0
4540856	CA13NA024****(A,B)	CNPH*2417A**+TDR		23,000	11.0	13.0
4540888	CA13NA024****(A,B)	CNPH*3017A**	58CV(A,X)070−12	23,000	12.0	14.5
4540889	CA13NA024****(A,B)	CNPH*3017A**	58CV(A,X)090−16	23,200	12.2	14.5
4540890	CA13NA024****(A,B)	CNPH*3017A**	58CV(A,X)110−20	23,200	12.2	14.5
4540891	CA13NA024****(A,B)	CNPH*3017A**	58CV(A,X)135−22	23,200	12.2	14.5
4540892	CA13NA024****(A,B)	CNPH*3017A**	58CV(A,X)155−22	23,200	12.2	14.5
4540897	CA13NA024****(A,B)	CNPH*3017A**	58HDV040−−12	23,600	11.7	14.0
4540898	CA13NA024****(A,B)	CNPH*3017A**	58HDV060−−12	23,600	11.7	14.0
4540899	CA13NA024****(A,B)	CNPH*3017A**	58HDV080−−20	24,000	12.0	14.5
4540900	CA13NA024****(A,B)	CNPH*3017A**	58HDV100−−20	23,800	12.0	14.5
4540895	CA13NA024****(A,B)	CNPH*3017A**	58ME(B,C)060−12	23,800	12.2	14.5
4540896	CA13NA024****(A,B)	CNPH*3017A**	58ME(B,C)080−12	23,600	12.2	14.5
4540894	CA13NA024****(A,B)	CNPH*3017A**	58MEB040−12	23,600	12.2	14.5
4540883	CA13NA024****(A,B)	CNPH*3017A**	58MV(B,C)060−14	23,400	12.2	14.5
4540884	CA13NA024****(A,B)	CNPH*3017A**	58MV(B,C)080−14	23,200	12.2	14.5
4540885	CA13NA024****(A,B)	CNPH*3017A**	58MV(B,C)080−20	23,000	12.2	14.5
4540886	CA13NA024****(A,B)	CNPH*3017A**	58MV(B,C)100−20	23,200	12.2	14.5
4540887	CA13NA024****(A,B)	CNPH*3017A**	58MV(B,C)120−20	23,200	12.2	14.5
4540882	CA13NA024****(A,B)	CNPH*3017A**	58MVB040−14	23,200	12.2	14.5
4540893	CA13NA024****(A,B)	CNPH*3017A**	58PH*045−08	23,400	12.0	14.0
4540902	CA13NA024****(A,B)	CNPH*3017A**	58VLR105−12	23,400	12.0	14.5
4540901	CA13NA024****(A,B)	CNPH*3017A**	58VMR105−12	23,200	12.0	14.5
4735830	CA13NA024****(A,B)	CNPH*3017A**	59*N*A060V17**14	23,200	12.0	14.5
4735831	CA13NA024****(A,B)	CNPH*3017A**	59*N*A080V17**14	23,000	12.0	14.5
4735832	CA13NA024****(A,B)	CNPH*3017A**	59*N*A100V21**20	23,400	12.0	14.5

See notes on page 39

AHRI COMBINATION RATINGS* CONTINUED

AHRI Ref. No.	Model Number	Indoor Model	Furnace Model	Capacity	EER	SEER
4735833	CA13NA024****(A,B)	CNPH*3017A**	59*N*A120V24**22	23,400	12.0	14.5
4735834	CA13NA024****(A,B)	CNPH*3017A**	59*P5A040E14**10	23,400	11.2	13.5
4735835	CA13NA024****(A,B)	CNPH*3017A**	59*P5A060E17**14	23,200	12.0	14.5
4540904	CA13NA024****(A,B)	CNPH*3017A**	OVLAAB036098	23,400	12.0	14.5
4540903	CA13NA024****(A,B)	CNPH*3017A**	OVMAAB036098	23,400	12.0	14.0
4540905	CA13NA024****(A,B)	CNPH*3017A**	OVMAAB042112	23,200	12.2	14.5
4540881	CA13NA024****(A,B)	CNPH*3017A**+TDR		23,200	11.0	13.0
4540913	CA13NA024****(A,B)	CNPH*3117A**	58CV(A,X)070−12	23,400	12.0	14.5
4540914	CA13NA024****(A,B)	CNPH*3117A**	58CV(A,X)090−16	23,400	12.0	14.5
4540915	CA13NA024****(A,B)	CNPH*3117A**	58CV(A,X)110−20	23,400	12.0	14.5
4540916	CA13NA024****(A,B)	CNPH*3117A**	58CV(A,X)135−22	23,400	12.0	14.5
4540917	CA13NA024****(A,B)	CNPH*3117A**	58CV(A,X)155−22	23,400	12.0	14.5
4540922	CA13NA024****(A,B)	CNPH*3117A**	58HDV040−−12	23,400	12.0	14.5
4540923	CA13NA024****(A,B)	CNPH*3117A**	58HDV060−−12	23,400	12.0	14.5
4542268	CA13NA024****(A,B)	CNPH*3117A**	58HDV080−−20	23,400	12.0	14.5
4540924	CA13NA024****(A,B)	CNPH*3117A**	58HDV100−−20	23,400	12.0	14.5
4540920	CA13NA024****(A,B)	CNPH*3117A**	58ME(B,C)060−12	23,400	12.0	14.5
4540921	CA13NA024****(A,B)	CNPH*3117A**	58ME(B,C)080−12	23,400	12.0	14.5
4540919	CA13NA024****(A,B)	CNPH*3117A**	58MEB040−12	23,400	12.0	14.5
4640617	CA13NA024****(A,B)	CNPH*3117A**	58MEC060−12	23,400	12.0	14.5
4540908	CA13NA024****(A,B)	CNPH*3117A**	58MV(B,C)060−14	23,400	12.0	14.5
4540909	CA13NA024****(A,B)	CNPH*3117A**	58MV(B,C)080−14	23,400	12.0	14.5
4540910	CA13NA024****(A,B)	CNPH*3117A**	58MV(B,C)080−20	23,400	12.0	14.5
4540911	CA13NA024****(A,B)	CNPH*3117A**	58MV(B,C)100−20	23,400	12.0	14.5
4540912	CA13NA024****(A,B)	CNPH*3117A**	58MV(B,C)120−20	23,400	12.0	14.5
4540907	CA13NA024****(A,B)	CNPH*3117A**	58MVB040−14	23,400	12.0	14.5
4540918	CA13NA024****(A,B)	CNPH*3117A**	58PH*045−08	23,400	12.0	14.5
4540926	CA13NA024****(A,B)	CNPH*3117A**	58VLR105−12	23,800	12.0	14.5
4540925	CA13NA024****(A,B)	CNPH*3117A**	58VMR105−12	23,600	12.0	14.5
4735836	CA13NA024****(A,B)	CNPH*3117A**	59*N*A060V17**14	23,600	12.0	14.5
4735837	CA13NA024****(A,B)	CNPH*3117A**	59*N*A080V17**14	23,400	12.5	15.0
4735838	CA13NA024****(A,B)	CNPH*3117A**	59*N*A100V21**20	23,800	12.5	15.0
4735839	CA13NA024****(A,B)	CNPH*3117A**	59*N*A120V24**22	23,800	12.5	15.0
4735840	CA13NA024****(A,B)	CNPH*3117A**	59*P5A040E14**10	23,800	11.4	13.7
4735841	CA13NA024****(A,B)	CNPH*3117A**	59*P5A060E17**14	23,800	12.5	15.0
4540928	CA13NA024****(A,B)	CNPH*3117A**	OVLAAB036098	23,600	12.2	14.5
4540927	CA13NA024****(A,B)	CNPH*3117A**	OVMAAB036098	23,600	12.2	14.5
4540929	CA13NA024****(A,B)	CNPH*3117A**	OVMAAB042112	23,600	12.2	14.5
4540906	CA13NA024****(A,B)	CNPH*3117A**+TDR		23,400	11.0	13.0
4540815	CA13NA024****(A,B)	CNPV*2414A**	58CV(A,X)070−12	22,800	11.7	14.0
4540816	CA13NA024****(A,B)	CNPV*2414A**	58PH*045−08	23,000	11.7	14.0
4735810	CA13NA024****(A,B)	CNPV*2414A**	59*P5A040E14**10	23,000	11.0	13.3
4540814	CA13NA024****(A,B)	CNPV*2414A**+TDR		23,000	11.0	13.0
4540820	CA13NA024****(A,B)	CNPV*2417A**	58CV(A,X)090−16	22,800	12.0	14.0
4640609	CA13NA024****(A,B)	CNPV*2417A**	58HDV040−−12	23,000	11.5	13.5
4540822	CA13NA024****(A,B)	CNPV*2417A**	58ME(B,C)060−12	23,200	12.0	14.5
4540823	CA13NA024****(A,B)	CNPV*2417A**	58ME(B,C)080−12	23,200	12.0	14.5
4540821	CA13NA024****(A,B)	CNPV*2417A**	58MEB040−12	23,200	12.0	14.5
4540818	CA13NA024****(A,B)	CNPV*2417A**	58MV(B,C)060−14	23,200	12.0	14.0
4540819	CA13NA024****(A,B)	CNPV*2417A**	58UVB060−14	23,200	12.0	14.0
4540825	CA13NA024****(A,B)	CNPV*2417A**	58VLR105−12	23,200	12.0	14.0
4540824	CA13NA024****(A,B)	CNPV*2417A**	58VMR105−12	22,800	11.7	14.0
4735811	CA13NA024****(A,B)	CNPV*2417A**	59*N*A060V17**14	22,800	11.8	14.2
4735812	CA13NA024****(A,B)	CNPV*2417A**	59*N*A080V17**14	22,800	12.0	14.5
4735813	CA13NA024****(A,B)	CNPV*2417A**	59*P5A040E14**10	23,000	11.0	13.3
4735814	CA13NA024****(A,B)	CNPV*2417A**	59*P5A060E17**14	22,800	12.0	14.5
4540827	CA13NA024****(A,B)	CNPV*2417A**	OVLAAB036098	23,000	11.7	14.0
4540826	CA13NA024****(A,B)	CNPV*2417A**	OVMAAB036098	23,000	11.7	14.0
4540828	CA13NA024****(A,B)	CNPV*2417A**	OVMAAB042112	23,000	11.7	14.0
4540817	CA13NA024****(A,B)	CNPV*2417A**+TDR		23,000	11.0	13.0
4540830	CA13NA024****(A,B)	CNPV*3014A**	58CV(A,X)070−12	23,000	12.0	14.5
4540831	CA13NA024****(A,B)	CNPV*3014A**	58PH*045−08	23,200	12.0	14.0
4735815	CA13NA024****(A,B)	CNPV*3014A**	59*P5A040E14**10	23,200	11.2	13.5
4540829	CA13NA024****(A,B)	CNPV*3014A**+TDR		23,200	11.0	13.0
4540835	CA13NA024****(A,B)	CNPV*3017A**	58CV(A,X)090−16	23,200	12.2	14.5
4640610	CA13NA024****(A,B)	CNPV*3017A**	58HDV040−−12	23,400	11.7	14.0
4640611	CA13NA024****(A,B)	CNPV*3017A**	58HDV060−−12	23,600	11.7	14.0
4540837	CA13NA024****(A,B)	CNPV*3017A**	58ME(B,C)060−12	23,800	12.2	14.5
4540838	CA13NA024****(A,B)	CNPV*3017A**	58ME(B,C)080−12	23,600	12.2	14.5
4540836	CA13NA024****(A,B)	CNPV*3017A**	58MEB040−12	23,600	12.2	14.5
4540833	CA13NA024****(A,B)	CNPV*3017A**	58MV(B,C)060−14	23,400	12.2	14.5
4540834	CA13NA024****(A,B)	CNPV*3017A**	58UVB060−14	23,400	12.2	14.5
4540840	CA13NA024****(A,B)	CNPV*3017A**	58VLR105−12	23,400	12.0	14.5

See notes on page 39

AHRI COMBINATION RATINGS* CONTINUED

AHRI Ref. No.	Model Number	Indoor Model	Furnace Model	Capacity	EER	SEER
4540839	CA13NA024****(A,B)	CNPV*3017A**	58VMR105−12	23,200	12.0	14.5
4735816	CA13NA024****(A,B)	CNPV*3017A**	59*N*A060V17**14	23,200	12.0	14.5
4735817	CA13NA024****(A,B)	CNPV*3017A**	59*N*A080V17**14	23,000	12.0	14.5
4735818	CA13NA024****(A,B)	CNPV*3017A**	59*P5A040E14**10	23,400	11.2	13.5
4735819	CA13NA024****(A,B)	CNPV*3017A**	59*P5A060E17**14	23,200	12.0	14.5
4540842	CA13NA024****(A,B)	CNPV*3017A**	OVLAAB036098	23,400	12.0	14.5
4540841	CA13NA024****(A,B)	CNPV*3017A**	OVMAAB036098	23,400	12.0	14.0
4540843	CA13NA024****(A,B)	CNPV*3017A**	OVMAAB042112	23,200	12.2	14.5
4540832	CA13NA024****(A,B)	CNPV*3017A**+TDR		23,200	11.0	13.0
4540847	CA13NA024****(A,B)	CNPV*3117A**	58CV(A,X)090−16	23,400	12.0	14.5
4640612	CA13NA024****(A,B)	CNPV*3117A**	58HDV040−−12	23,800	12.0	14.0
4640613	CA13NA024****(A,B)	CNPV*3117A**	58HDV060−−12	24,000	12.0	14.5
4540849	CA13NA024****(A,B)	CNPV*3117A**	58ME(B,C)060−12	23,400	12.0	14.5
4540850	CA13NA024****(A,B)	CNPV*3117A**	58ME(B,C)080−12	23,400	12.0	14.5
4540848	CA13NA024****(A,B)	CNPV*3117A**	58MEB040−12	23,400	12.0	14.5
4540845	CA13NA024****(A,B)	CNPV*3117A**	58MV(B,C)060−14	23,400	12.0	14.5
4540846	CA13NA024****(A,B)	CNPV*3117A**	58UVB060−14	23,400	12.0	14.5
4540852	CA13NA024****(A,B)	CNPV*3117A**	58VLR105−12	23,800	12.0	14.5
4540851	CA13NA024****(A,B)	CNPV*3117A**	58VMR105−12	23,600	12.0	14.5
4735820	CA13NA024****(A,B)	CNPV*3117A**	59*N*A060V17**14	23,600	12.0	14.5
4735821	CA13NA024****(A,B)	CNPV*3117A**	59*N*A080V17**14	23,400	12.4	15.0
4735822	CA13NA024****(A,B)	CNPV*3117A**	59*P5A040E14**10	23,800	11.4	13.7
4735823	CA13NA024****(A,B)	CNPV*3117A**	59*P5A060E17**14	23,800	12.5	15.0
4540854	CA13NA024****(A,B)	CNPV*3117A**	OVLAAB036098	23,600	12.2	14.5
4540853	CA13NA024****(A,B)	CNPV*3117A**	OVMAAB036098	23,800	12.2	14.5
4540855	CA13NA024****(A,B)	CNPV*3117A**	OVMAAB042112	23,600	12.2	14.5
4540844	CA13NA024****(A,B)	CNPV*3117A**+TDR		23,400	11.0	13.0
4640614	CA13NA024****(A,B)	CNPV*3617A**	58PH*045−08	23,400	12.2	14.5
4640615	CA13NA024****(A,B)	CNPV*3621A**	58MV(B,C)080−14	23,000	12.0	14.5
4640616	CA13NA024****(A,B)	CNPV*3621A**	58UVB080−14	23,000	12.0	14.5
4735857	CA13NA024****(A,B)	CNPV*3621A**	59*N*A060V17**14	23,200	12.0	14.5
4735858	CA13NA024****(A,B)	CNPV*3621A**	59*N*A080V17**14	23,000	12.0	14.5
4735859	CA13NA024****(A,B)	CNPV*3621A**	59*N*A100V21**20	23,400	12.0	14.5
4540937	CA13NA024****(A,B)	CSPH*2412A**	58CV(A,X)070−12	23,000	12.0	14.0
4540938	CA13NA024****(A,B)	CSPH*2412A**	58CV(A,X)090−16	23,200	12.0	14.0
4540939	CA13NA024****(A,B)	CSPH*2412A**	58CV(A,X)110−20	23,200	12.0	14.0
4540940	CA13NA024****(A,B)	CSPH*2412A**	58CV(A,X)135−22	23,200	12.0	14.0
4540941	CA13NA024****(A,B)	CSPH*2412A**	58CV(A,X)155−22	23,200	12.0	14.0
4540946	CA13NA024****(A,B)	CSPH*2412A**	58HDV040−−12	23,000	11.5	14.0
4540947	CA13NA024****(A,B)	CSPH*2412A**	58HDV060−−12	23,000	11.5	14.0
4540948	CA13NA024****(A,B)	CSPH*2412A**	58HDV080−−20	23,000	11.5	14.0
4540949	CA13NA024****(A,B)	CSPH*2412A**	58HDV100−−20	23,000	11.5	14.0
4540944	CA13NA024****(A,B)	CSPH*2412A**	58ME(B,C)060−12	23,400	12.2	14.5
4540945	CA13NA024****(A,B)	CSPH*2412A**	58ME(B,C)080−12	23,400	12.2	14.5
4540943	CA13NA024****(A,B)	CSPH*2412A**	58MEB040−12	23,400	12.2	14.5
4540932	CA13NA024****(A,B)	CSPH*2412A**	58MV(B,C)060−14	23,400	12.0	14.0
4540933	CA13NA024****(A,B)	CSPH*2412A**	58MV(B,C)080−14	23,000	12.0	14.0
4540934	CA13NA024****(A,B)	CSPH*2412A**	58MV(B,C)080−20	23,000	12.0	14.0
4540935	CA13NA024****(A,B)	CSPH*2412A**	58MV(B,C)100−20	23,200	12.0	14.0
4540936	CA13NA024****(A,B)	CSPH*2412A**	58MV(B,C)120−20	23,200	12.0	14.0
4540931	CA13NA024****(A,B)	CSPH*2412A**	58MVB040−14	23,200	12.0	14.0
4540942	CA13NA024****(A,B)	CSPH*2412A**	58PH*045−08	23,200	12.0	14.0
4540951	CA13NA024****(A,B)	CSPH*2412A**	58VLR105−12	23,400	12.0	14.5
4540950	CA13NA024****(A,B)	CSPH*2412A**	58VMR105−12	23,000	11.7	14.0
4735842	CA13NA024****(A,B)	CSPH*2412A**	59*N*A060V17**14	23,200	11.8	14.2
4735843	CA13NA024****(A,B)	CSPH*2412A**	59*N*A080V17**14	23,000	12.0	14.5
4735844	CA13NA024****(A,B)	CSPH*2412A**	59*N*A100V21**20	23,400	12.0	14.5
4735845	CA13NA024****(A,B)	CSPH*2412A**	59*N*A120V24**22	23,400	12.0	14.5
4735846	CA13NA024****(A,B)	CSPH*2412A**	59*P5A040E14**10	23,200	11.2	13.5
4735847	CA13NA024****(A,B)	CSPH*2412A**	59*P5A060E17**14	23,000	12.0	14.5
4540953	CA13NA024****(A,B)	CSPH*2412A**	OVLAAB036098	23,400	11.7	14.0
4540952	CA13NA024****(A,B)	CSPH*2412A**	OVMAAB036098	23,400	11.7	14.0
4540954	CA13NA024****(A,B)	CSPH*2412A**	OVMAAB042112	23,200	12.0	14.5
4540930	CA13NA024****(A,B)	CSPH*2412A**+TDR		23,000	11.0	13.0
4540962	CA13NA024****(A,B)	CSPH*3012A**	58CV(A,X)070−12	23,000	12.0	14.5
4540963	CA13NA024****(A,B)	CSPH*3012A**	58CV(A,X)090−16	23,200	12.2	14.5
4540964	CA13NA024****(A,B)	CSPH*3012A**	58CV(A,X)110−20	23,200	12.2	14.5
4540965	CA13NA024****(A,B)	CSPH*3012A**	58CV(A,X)135−22	23,200	12.2	14.5
4540966	CA13NA024****(A,B)	CSPH*3012A**	58CV(A,X)155−22	23,200	12.2	14.5
4540971	CA13NA024****(A,B)	CSPH*3012A**	58HDV040−−12	23,400	11.5	14.0
4540972	CA13NA024****(A,B)	CSPH*3012A**	58HDV060−−12	23,400	11.5	14.0
4540973	CA13NA024****(A,B)	CSPH*3012A**	58HDV080−−20	23,400	11.5	14.0
4540974	CA13NA024****(A,B)	CSPH*3012A**	58HDV100−−20	23,400	11.5	14.5

See notes on page 39

AHRI COMBINATION RATINGS* CONTINUED

AHRI Ref. No.	Model Number	Indoor Model	Furnace Model	Capacity	EER	SEER
4540969	CA13NA024****(A,B)	CSPH*3012A**	58ME(B,C)060−12	23,800	12.2	14.5
4540970	CA13NA024****(A,B)	CSPH*3012A**	58ME(B,C)080−12	23,600	12.2	14.5
4540968	CA13NA024****(A,B)	CSPH*3012A**	58MEB040−12	23,600	12.2	14.5
4540957	CA13NA024****(A,B)	CSPH*3012A**	58MV(B,C)060−14	23,600	12.2	14.5
4540958	CA13NA024****(A,B)	CSPH*3012A**	58MV(B,C)080−14	23,200	12.2	14.5
4540959	CA13NA024****(A,B)	CSPH*3012A**	58MV(B,C)080−20	23,000	12.2	14.5
4540960	CA13NA024****(A,B)	CSPH*3012A**	58MV(B,C)100−20	23,200	12.2	14.5
4540961	CA13NA024****(A,B)	CSPH*3012A**	58MV(B,C)120−20	23,400	12.2	14.5
4540956	CA13NA024****(A,B)	CSPH*3012A**	58MVB040−14	23,200	12.2	14.5
4540967	CA13NA024****(A,B)	CSPH*3012A**	58PH*045−08	23,400	12.0	14.0
4540976	CA13NA024****(A,B)	CSPH*3012A**	58VLR105−12	23,400	12.0	14.5
4540975	CA13NA024****(A,B)	CSPH*3012A**	58VMR105−12	23,200	12.0	14.5
4735848	CA13NA024****(A,B)	CSPH*3012A**	59*N*A060V17**14	23,200	12.0	14.5
4735849	CA13NA024****(A,B)	CSPH*3012A**	59*N*A080V17**14	23,200	12.0	14.5
4735850	CA13NA024****(A,B)	CSPH*3012A**	59*N*A100V21**20	23,400	12.0	14.5
4735851	CA13NA024****(A,B)	CSPH*3012A**	59*N*A120V24**22	23,400	12.0	14.5
4735852	CA13NA024****(A,B)	CSPH*3012A**	59*P5A040E14**10	23,400	11.2	13.5
4735853	CA13NA024****(A,B)	CSPH*3012A**	59*P5A060E17**14	23,200	12.0	14.5
4540978	CA13NA024****(A,B)	CSPH*3012A**	OVLAAB036098	23,400	12.0	14.5
4540977	CA13NA024****(A,B)	CSPH*3012A**	OVMAAB036098	23,400	12.0	14.0
4540979	CA13NA024****(A,B)	CSPH*3012A**	OVMAAB042112	23,400	12.2	14.5
4540955	CA13NA024****(A,B)	CSPH*3012A**+TDR		23,200	11.0	13.0
4540990	CA13NA024****(A,B)	FB4CNF024		22,800	11.0	13.5
4540989	CA13NA024****(A,B)	FB4CNF024+TXV		22,800	11.5	14.0
4540992	CA13NA024****(A,B)	FB4CNF030		23,600	12.0	14.0
4540991	CA13NA024****(A,B)	FB4CNF030+TXV		23,400	12.0	14.5
4540983	CA13NA024****(A,B)	FE4AN(B,F)003+UI		23,400	12.2	15.0
4540982	CA13NA024****(A,B)	FE4ANF002+UI		23,400	12.2	14.5
4651164	CA13NA024****(A,B)	FF1ENP024		22,600	11.0	13.0
4540984	CA13NA024****(A,B)	FF1ENP025		23,000	11.7	14.0
4540985	CA13NA024****(A,B)	FF1ENP030		23,000	10.9	13.0
4540986	CA13NA024****(A,B)	FF1ENP031		23,200	11.7	14.0
4540988	CA13NA024****(A,B)	FV4CN(B,F)003		23,400	12.2	14.5
4540987	CA13NA024****(A,B)	FV4CNF002		22,600	12.0	14.0
4540981	CA13NA024****(A,B)	FX4DN(B,F)031		23,600	11.5	14.0
4640618	CA13NA024****(A,B)	FX4DN(B,F)037		23,800	12.0	14.5
4540980	CA13NA024****(A,B)	FX4DNF025		23,400	12.0	14.5
4540994	CA13NA024****(A,B)	FY5BNF024		23,400	11.5	13.5
4540993	CA13NA024****(A,B)	FY5BNF024+TXV		23,400	11.5	13.5
4540996	CA13NA024****(A,B)	FY5BNF030		23,600	11.0	13.5
4540995	CA13NA024****(A,B)	FY5BNF030+TXV		23,600	11.0	13.5
4540997	CA13NA030****(A,B)	†CAP**3014A**+TDR		27,400	10.9	13.0
4540998	CA13NA030****(A,B)	CAP**3014A**	58CV(A,X)070−12	27,200	11.7	14.0
4541002	CA13NA030****(A,B)	CAP**3017A**	58CV(A,X)090−16	27,400	12.0	14.0
4541005	CA13NA030****(A,B)	CAP**3017A**	58ME(B,C)060−12	27,800	11.7	14.0
4541006	CA13NA030****(A,B)	CAP**3017A**	58ME(B,C)080−12	27,600	12.0	14.0
4541007	CA13NA030****(A,B)	CAP**3017A**	58ME(B,C)080−16	27,800	11.7	14.0
4541004	CA13NA030****(A,B)	CAP**3017A**	58MEB040−12	27,600	12.0	14.5
4541000	CA13NA030****(A,B)	CAP**3017A**	58MV(B,C)060−14	27,400	11.7	14.0
4541003	CA13NA030****(A,B)	CAP**3017A**	58PH*070−16	27,400	11.7	14.0
4541001	CA13NA030****(A,B)	CAP**3017A**	58UVB060−14	27,400	11.7	14.0
4541009	CA13NA030****(A,B)	CAP**3017A**	58VLR105−12	27,400	11.5	14.0
4541008	CA13NA030****(A,B)	CAP**3017A**	58VMR105−12	27,200	11.5	14.0
4735860	CA13NA030****(A,B)	CAP**3017A**	59*N*A060V17**14	27,200	11.5	14.0
4735861	CA13NA030****(A,B)	CAP**3017A**	59*N*A080V17**14	27,400	11.8	14.2
4735862	CA13NA030****(A,B)	CAP**3017A**	59*P5A060E17**14	27,400	11.5	14.0
4735863	CA13NA030****(A,B)	CAP**3017A**	59*P5A080E17**16	27,600	11.5	14.0
4541011	CA13NA030****(A,B)	CAP**3017A**	OVLAAB036098	27,400	11.5	13.5
4541010	CA13NA030****(A,B)	CAP**3017A**	OVMAAB036098	27,400	11.0	13.7
4541012	CA13NA030****(A,B)	CAP**3017A**	OVMAAB042112	27,600	11.7	14.0
4540999	CA13NA030****(A,B)	CAP**3017A**+TDR		27,400	10.8	13.0
4541014	CA13NA030****(A,B)	CAP**3614A**	58CV(A,X)070−12	27,400	11.7	14.0
4541013	CA13NA030****(A,B)	CAP**3614A**+TDR		27,400	10.8	13.0
4541018	CA13NA030****(A,B)	CAP**3617A**	58CV(A,X)090−16	27,400	12.0	14.5
4541021	CA13NA030****(A,B)	CAP**3617A**	58ME(B,C)060−12	27,600	12.0	14.5
4541022	CA13NA030****(A,B)	CAP**3617A**	58ME(B,C)080−12	27,600	12.0	14.5
4541023	CA13NA030****(A,B)	CAP**3617A**	58ME(B,C)080−16	28,000	11.7	14.0
4541020	CA13NA030****(A,B)	CAP**3617A**	58MEB040−12	27,800	12.0	14.5
4541016	CA13NA030****(A,B)	CAP**3617A**	58MV(B,C)060−14	27,600	12.0	14.0
4541019	CA13NA030****(A,B)	CAP**3617A**	58PH*070−16	27,600	11.7	14.0
4541017	CA13NA030****(A,B)	CAP**3617A**	58UVB060−14	27,600	12.0	14.0
4541025	CA13NA030****(A,B)	CAP**3617A**	58VLR105−12	27,600	11.7	14.0

See notes on page 39

AHRI COMBINATION RATINGS* CONTINUED

AHRI Ref. No.	Model Number	Indoor Model	Furnace Model	Capacity	EER	SEER
4541024	CA13NA030****(A,B)	CAP**3617A**	58VMR105−12	27,200	11.7	14.0
4735864	CA13NA030****(A,B)	CAP**3617A**	59*N*A060V17**14	27,400	11.5	14.0
4735865	CA13NA030****(A,B)	CAP**3617A**	59*N*A080V17**14	27,600	11.8	14.2
4735866	CA13NA030****(A,B)	CAP**3617A**	59*P5A060E17**14	27,600	11.5	14.0
4735867	CA13NA030****(A,B)	CAP**3617A**	59*P5A080E17**16	27,800	11.8	14.2
4541027	CA13NA030****(A,B)	CAP**3617A**	OVLAAB036098	27,400	11.5	14.0
4541026	CA13NA030****(A,B)	CAP**3617A**	OVMAAB036098	27,400	11.5	13.5
4541028	CA13NA030****(A,B)	CAP**3617A**	OVMAAB042112	27,600	11.7	14.0
4541015	CA13NA030****(A,B)	CAP**3617A**+TDR		27,600	10.8	13.0
4541040	CA13NA030****(A,B)	CAP**3619A**	58HDV040−−12	27,600	11.0	13.5
4541041	CA13NA030****(A,B)	CAP**3619A**	58HDV060−−12	27,600	11.0	13.5
4735873	CA13NA030****(A,B)	CAP**3619A**	59*N*A060V17**14	27,400	11.5	14.0
4735874	CA13NA030****(A,B)	CAP**3619A**	59*N*A080V17**14	27,600	11.8	14.2
4735875	CA13NA030****(A,B)	CAP**3619A**	59*N*A100V21**20	27,600	11.8	14.2
4735876	CA13NA030****(A,B)	CAP**3619A**	59*P5A060E17**14	27,600	11.5	14.0
4735877	CA13NA030****(A,B)	CAP**3619A**	59*P5A080E17**16	27,800	11.8	14.2
4541039	CA13NA030****(A,B)	CAP**3619A**+TDR		27,600	10.8	13.0
4541036	CA13NA030****(A,B)	CAP**3621A**	58CV(A,X)110−20	27,600	12.0	14.5
4541030	CA13NA030****(A,B)	CAP**3621A**	58MV(B,C)080−14	27,400	11.7	14.0
4541031	CA13NA030****(A,B)	CAP**3621A**	58MV(B,C)080−20	27,400	12.0	14.0
4541032	CA13NA030****(A,B)	CAP**3621A**	58MV(B,C)100−20	27,200	11.7	14.0
4541037	CA13NA030****(A,B)	CAP**3621A**	58PH*090−16	27,800	12.0	14.0
4541033	CA13NA030****(A,B)	CAP**3621A**	58UVB080−14	27,400	11.7	14.0
4541034	CA13NA030****(A,B)	CAP**3621A**	58UVB080−20	27,400	12.0	14.0
4541035	CA13NA030****(A,B)	CAP**3621A**	58UVB100−20	27,200	11.7	14.0
4735868	CA13NA030****(A,B)	CAP**3621A**	59*N*A060V17**14	27,400	11.8	14.2
4735869	CA13NA030****(A,B)	CAP**3621A**	59*N*A080V17**14	27,600	11.8	14.2
4735870	CA13NA030****(A,B)	CAP**3621A**	59*N*A100V21**20	27,600	11.8	14.2
4735871	CA13NA030****(A,B)	CAP**3621A**	59*P5A060E17**14	27,600	11.8	14.2
4735872	CA13NA030****(A,B)	CAP**3621A**	59*P5A080E17**16	27,800	11.8	14.2
4541038	CA13NA030****(A,B)	CAP**3621A**	OVLAAB048112	27,800	11.7	14.0
4541029	CA13NA030****(A,B)	CAP**3621A**+TDR		27,600	10.8	13.0
4773519	CA13NA030****(A,B)	CAP**4221A**	59*N*A100V21**20	27,800	12.0	14.5
4640621	CA13NA030****(A,B)	CAP**4221A**+TDR		27,600	11.0	13.0
4773520	CA13NA030****(A,B)	CAP**4224A**	59*N*A100V21**20	27,800	12.0	14.5
4640622	CA13NA030****(A,B)	CAP**4224A**+TDR		27,600	11.0	13.0
4640620	CA13NA030****(A,B)	CAP**4823A**	58HDV080−−20	27,600	12.0	14.5
4640619	CA13NA030****(A,B)	CAP**4823A**+TDR		27,600	11.0	13.0
4541117	CA13NA030****(A,B)	CNPH*3017A**	58CV(A,X)070−12	27,200	11.7	14.0
4541118	CA13NA030****(A,B)	CNPH*3017A**	58CV(A,X)090−16	27,400	11.7	14.0
4541119	CA13NA030****(A,B)	CNPH*3017A**	58CV(A,X)110−20	27,400	11.7	14.0
4541120	CA13NA030****(A,B)	CNPH*3017A**	58CV(A,X)135−22	27,400	12.0	14.0
4541121	CA13NA030****(A,B)	CNPH*3017A**	58CV(A,X)155−22	27,400	12.0	14.0
4541128	CA13NA030****(A,B)	CNPH*3017A**	58HDV040−−12	27,400	11.0	13.5
4541129	CA13NA030****(A,B)	CNPH*3017A**	58HDV060−−12	27,600	11.0	13.5
4541130	CA13NA030****(A,B)	CNPH*3017A**	58HDV080−−20	27,800	11.5	14.0
4541131	CA13NA030****(A,B)	CNPH*3017A**	58HDV100−−20	27,600	11.7	14.0
4541125	CA13NA030****(A,B)	CNPH*3017A**	58ME(B,C)060−12	27,800	11.7	14.0
4541126	CA13NA030****(A,B)	CNPH*3017A**	58ME(B,C)080−12	27,600	12.0	14.0
4541127	CA13NA030****(A,B)	CNPH*3017A**	58ME(B,C)080−16	27,800	11.7	14.0
4541124	CA13NA030****(A,B)	CNPH*3017A**	58MEB040−12	27,600	12.0	14.0
4541112	CA13NA030****(A,B)	CNPH*3017A**	58MV(B,C)060−14	27,600	11.7	14.0
4541113	CA13NA030****(A,B)	CNPH*3017A**	58MV(B,C)080−14	27,200	11.7	14.0
4541114	CA13NA030****(A,B)	CNPH*3017A**	58MV(B,C)080−20	27,400	11.7	14.0
4541115	CA13NA030****(A,B)	CNPH*3017A**	58MV(B,C)100−20	27,200	11.7	14.0
4541116	CA13NA030****(A,B)	CNPH*3017A**	58MV(B,C)120−20	27,400	12.0	14.0
4541111	CA13NA030****(A,B)	CNPH*3017A**	58MVB040−14	27,400	11.7	14.0
4541122	CA13NA030****(A,B)	CNPH*3017A**	58PH*070−16	27,400	11.5	14.0
4541123	CA13NA030****(A,B)	CNPH*3017A**	58PH*090−16	27,600	11.7	14.0
4541133	CA13NA030****(A,B)	CNPH*3017A**	58VLR105−12	27,600	11.7	14.0
4541132	CA13NA030****(A,B)	CNPH*3017A**	58VMR105−12	27,200	11.7	14.0
4735899	CA13NA030****(A,B)	CNPH*3017A**	59*N*A060V17**14	27,400	11.5	14.0
4735900	CA13NA030****(A,B)	CNPH*3017A**	59*N*A080V17**14	27,400	11.8	14.2
4735901	CA13NA030****(A,B)	CNPH*3017A**	59*N*A100V21**20	27,600	11.8	14.2
4735902	CA13NA030****(A,B)	CNPH*3017A**	59*N*A120V24**22	27,600	11.8	14.2
4735903	CA13NA030****(A,B)	CNPH*3017A**	59*P5A060E17**14	27,600	11.5	14.0
4735904	CA13NA030****(A,B)	CNPH*3017A**	59*P5A080E17**16	27,600	11.5	14.0
4541135	CA13NA030****(A,B)	CNPH*3017A**	OVLAAB036098	27,400	11.5	13.5
4541137	CA13NA030****(A,B)	CNPH*3017A**	OVLAAB048112	27,600	11.5	13.5
4541134	CA13NA030****(A,B)	CNPH*3017A**	OVMAAB036098	27,400	11.0	13.5
4541136	CA13NA030****(A,B)	CNPH*3017A**	OVMAAB042112	27,600	11.7	14.0
4541110	CA13NA030****(A,B)	CNPH*3017A**+TDR		27,400	10.9	13.0
4541145	CA13NA030****(A,B)	CNPH*3117A**	58CV(A,X)070−12	27,800	12.0	14.5

See notes on page 39

AHRI COMBINATION RATINGS* CONTINUED

AHRI Ref. No.	Model Number	Indoor Model	Furnace Model	Capacity	EER	SEER
4541146	CA13NA030****(A,B)	CNPH*3117A**	58CV(A,X)090−16	27,800	12.0	14.5
4541147	CA13NA030****(A,B)	CNPH*3117A**	58CV(A,X)110−20	27,800	12.0	14.5
4541148	CA13NA030****(A,B)	CNPH*3117A**	58CV(A,X)135−22	27,800	12.0	14.5
4541149	CA13NA030****(A,B)	CNPH*3117A**	58CV(A,X)155−22	27,800	12.0	14.5
4541156	CA13NA030****(A,B)	CNPH*3117A**	58HDV040−−12	28,200	11.5	14.0
4541157	CA13NA030****(A,B)	CNPH*3117A**	58HDV060−−12	27,800	11.5	14.0
4541158	CA13NA030****(A,B)	CNPH*3117A**	58HDV080−−20	27,800	11.5	14.0
4541159	CA13NA030****(A,B)	CNPH*3117A**	58HDV100−−20	27,800	11.5	14.0
4541153	CA13NA030****(A,B)	CNPH*3117A**	58ME(B,C)060−12	27,800	12.0	14.5
4541154	CA13NA030****(A,B)	CNPH*3117A**	58ME(B,C)080−12	27,800	12.0	14.5
4541155	CA13NA030****(A,B)	CNPH*3117A**	58ME(B,C)080−16	27,800	12.0	14.5
4541152	CA13NA030****(A,B)	CNPH*3117A**	58MEB040−12	27,800	12.0	14.5
4640641	CA13NA030****(A,B)	CNPH*3117A**	58MEC060−12	27,800	12.0	14.5
4541140	CA13NA030****(A,B)	CNPH*3117A**	58MV(B,C)060−14	27,800	12.0	14.5
4541141	CA13NA030****(A,B)	CNPH*3117A**	58MV(B,C)080−14	27,800	12.0	14.5
4541142	CA13NA030****(A,B)	CNPH*3117A**	58MV(B,C)080−20	27,800	12.0	14.5
4541143	CA13NA030****(A,B)	CNPH*3117A**	58MV(B,C)100−20	27,800	12.0	14.5
4541144	CA13NA030****(A,B)	CNPH*3117A**	58MV(B,C)120−20	27,800	12.0	14.5
4541139	CA13NA030****(A,B)	CNPH*3117A**	58MVB040−14	27,800	12.0	14.5
4541150	CA13NA030****(A,B)	CNPH*3117A**	58PH*070−16	27,800	11.5	14.0
4541151	CA13NA030****(A,B)	CNPH*3117A**	58PH*090−16	27,800	12.0	14.5
4541161	CA13NA030****(A,B)	CNPH*3117A**	58VLR105−12	28,200	12.0	14.0
4541160	CA13NA030****(A,B)	CNPH*3117A**	58VMR105−12	27,800	12.0	14.0
4735905	CA13NA030****(A,B)	CNPH*3117A**	59*N*A060V17**14	27,800	11.8	14.2
4735906	CA13NA030****(A,B)	CNPH*3117A**	59*N*A080V17**14	28,000	12.0	14.5
4735907	CA13NA030****(A,B)	CNPH*3117A**	59*N*A100V21**20	28,200	12.0	14.5
4735908	CA13NA030****(A,B)	CNPH*3117A**	59*N*A120V24**22	28,200	12.0	14.5
4735909	CA13NA030****(A,B)	CNPH*3117A**	59*P5A060E17**14	28,200	11.8	14.2
4735910	CA13NA030****(A,B)	CNPH*3117A**	59*P5A080E17**16	28,400	11.8	14.2
4541163	CA13NA030****(A,B)	CNPH*3117A**	OVLAAB036098	28,000	11.7	14.0
4541165	CA13NA030****(A,B)	CNPH*3117A**	OVLAAB048112	28,200	12.0	14.0
4541162	CA13NA030****(A,B)	CNPH*3117A**	OVMAAB036098	28,000	11.5	14.0
4541164	CA13NA030****(A,B)	CNPH*3117A**	OVMAAB042112	28,200	12.0	14.5
4541138	CA13NA030****(A,B)	CNPH*3117A**+TDR		27,800	11.0	13.0
4541173	CA13NA030****(A,B)	CNPH*3617A**	58CV(A,X)070−12	27,400	11.7	14.0
4541174	CA13NA030****(A,B)	CNPH*3617A**	58CV(A,X)090−16	27,400	11.7	14.0
4541175	CA13NA030****(A,B)	CNPH*3617A**	58CV(A,X)110−20	27,400	11.7	14.0
4541176	CA13NA030****(A,B)	CNPH*3617A**	58CV(A,X)135−22	27,400	12.0	14.0
4541177	CA13NA030****(A,B)	CNPH*3617A**	58CV(A,X)155−22	27,400	12.0	14.0
4541184	CA13NA030****(A,B)	CNPH*3617A**	58HDV040−−12	27,400	11.0	13.5
4541185	CA13NA030****(A,B)	CNPH*3617A**	58HDV060−−12	27,600	11.0	13.5
4541186	CA13NA030****(A,B)	CNPH*3617A**	58HDV080−−20	27,800	11.5	14.0
4541187	CA13NA030****(A,B)	CNPH*3617A**	58HDV100−−20	27,600	11.7	14.0
4541181	CA13NA030****(A,B)	CNPH*3617A**	58ME(B,C)060−12	27,200	12.0	14.5
4541182	CA13NA030****(A,B)	CNPH*3617A**	58ME(B,C)080−12	27,000	12.0	14.5
4541183	CA13NA030****(A,B)	CNPH*3617A**	58ME(B,C)080−16	27,800	11.7	14.0
4541180	CA13NA030****(A,B)	CNPH*3617A**	58MEB040−12	27,200	12.0	14.5
4640646	CA13NA030****(A,B)	CNPH*3617A**	58MEC060−12	27,200	12.0	14.0
4541168	CA13NA030****(A,B)	CNPH*3617A**	58MV(B,C)060−14	27,600	11.7	14.0
4541169	CA13NA030****(A,B)	CNPH*3617A**	58MV(B,C)080−14	27,200	11.7	14.0
4541170	CA13NA030****(A,B)	CNPH*3617A**	58MV(B,C)080−20	27,400	11.7	14.0
4541171	CA13NA030****(A,B)	CNPH*3617A**	58MV(B,C)100−20	27,200	11.7	14.0
4541172	CA13NA030****(A,B)	CNPH*3617A**	58MV(B,C)120−20	27,400	12.0	14.0
4541167	CA13NA030****(A,B)	CNPH*3617A**	58MVB040−14	27,400	11.7	14.0
4541178	CA13NA030****(A,B)	CNPH*3617A**	58PH*070−16	27,400	11.5	14.0
4541179	CA13NA030****(A,B)	CNPH*3617A**	58PH*090−16	27,600	11.7	14.0
4541189	CA13NA030****(A,B)	CNPH*3617A**	58VLR105−12	27,600	11.7	14.0
4541188	CA13NA030****(A,B)	CNPH*3617A**	58VMR105−12	27,200	11.7	14.0
4735911	CA13NA030****(A,B)	CNPH*3617A**	59*N*A060V17**14	27,400	11.5	14.0
4735912	CA13NA030****(A,B)	CNPH*3617A**	59*N*A080V17**14	27,400	11.8	14.2
4735913	CA13NA030****(A,B)	CNPH*3617A**	59*N*A100V21**20	27,600	11.8	14.2
4735914	CA13NA030****(A,B)	CNPH*3617A**	59*N*A120V24**22	27,600	11.8	14.2
4735915	CA13NA030****(A,B)	CNPH*3617A**	59*P5A060E17**14	27,600	11.5	14.0
4735916	CA13NA030****(A,B)	CNPH*3617A**	59*P5A080E17**16	27,600	11.5	14.0
4541191	CA13NA030****(A,B)	CNPH*3617A**	OVLAAB036098	27,400	11.5	13.5
4541193	CA13NA030****(A,B)	CNPH*3617A**	OVLAAB048112	27,600	11.5	13.5
4541190	CA13NA030****(A,B)	CNPH*3617A**	OVMAAB036098	27,400	11.0	13.5
4541192	CA13NA030****(A,B)	CNPH*3617A**	OVMAAB042112	27,600	11.7	14.0
4541166	CA13NA030****(A,B)	CNPH*3617A**+TDR		27,400	10.8	13.0
4640642	CA13NA030****(A,B)	CNPH*4221A**+TDR		27,600	11.0	13.0
4541043	CA13NA030****(A,B)	CNPV*3014A**	58CV(A,X)070−12	27,200	11.7	14.0
4541042	CA13NA030****(A,B)	CNPV*3014A**+TDR		27,400	10.9	13.0
4541047	CA13NA030****(A,B)	CNPV*3017A**	58CV(A,X)090−16	27,400	11.7	14.0

See notes on page 39

AHRI COMBINATION RATINGS* CONTINUED

AHRI Ref. No.	Model Number	Indoor Model	Furnace Model	Capacity	EER	SEER
4640623	CA13NA030****(A,B)	CNPV*3017A**	58HDV040−−12	27,400	11.0	13.5
4640624	CA13NA030****(A,B)	CNPV*3017A**	58HDV060−−12	27,600	11.0	13.5
4541050	CA13NA030****(A,B)	CNPV*3017A**	58ME(B,C)060−12	27,800	11.7	14.0
4541051	CA13NA030****(A,B)	CNPV*3017A**	58ME(B,C)080−12	27,600	12.0	14.0
4541052	CA13NA030****(A,B)	CNPV*3017A**	58ME(B,C)080−16	27,800	11.7	14.0
4541049	CA13NA030****(A,B)	CNPV*3017A**	58MEB040−12	27,600	12.0	14.0
4541045	CA13NA030****(A,B)	CNPV*3017A**	58MV(B,C)060−14	27,600	11.7	14.0
4541048	CA13NA030****(A,B)	CNPV*3017A**	58PH*070−16	27,400	11.5	14.0
4541046	CA13NA030****(A,B)	CNPV*3017A**	58UVB060−14	27,600	11.7	14.0
4541054	CA13NA030****(A,B)	CNPV*3017A**	58VLR105−12	27,600	11.7	14.0
4541053	CA13NA030****(A,B)	CNPV*3017A**	58VMR105−12	27,200	11.7	14.0
4735878	CA13NA030****(A,B)	CNPV*3017A**	59*N*A060V17**14	27,400	11.5	14.0
4735879	CA13NA030****(A,B)	CNPV*3017A**	59*N*A080V17**14	27,400	11.8	14.2
4735880	CA13NA030****(A,B)	CNPV*3017A**	59*P5A060E17**14	27,600	11.5	14.0
4735881	CA13NA030****(A,B)	CNPV*3017A**	59*P5A080E17**16	27,600	11.5	14.0
4541056	CA13NA030****(A,B)	CNPV*3017A**	OVLAAB036098	27,400	11.5	13.5
4541055	CA13NA030****(A,B)	CNPV*3017A**	OVMAAB036098	27,400	11.0	13.5
4541057	CA13NA030****(A,B)	CNPV*3017A**	OVMAAB042112	27,600	11.7	14.0
4541044	CA13NA030****(A,B)	CNPV*3017A**+TDR		27,400	10.9	13.0
4541061	CA13NA030****(A,B)	CNPV*3117A**	58CV(A,X)090−16	27,800	12.0	14.5
4640626	CA13NA030****(A,B)	CNPV*3117A**	58HDV040−−12	28,000	11.5	13.5
4640627	CA13NA030****(A,B)	CNPV*3117A**	58HDV060−−12	28,200	11.5	14.0
4541064	CA13NA030****(A,B)	CNPV*3117A**	58ME(B,C)060−12	27,800	12.0	14.5
4541065	CA13NA030****(A,B)	CNPV*3117A**	58ME(B,C)080−12	27,800	12.0	14.5
4541066	CA13NA030****(A,B)	CNPV*3117A**	58ME(B,C)080−16	27,800	12.0	14.5
4541063	CA13NA030****(A,B)	CNPV*3117A**	58MEB040−12	27,800	12.0	14.5
4640625	CA13NA030****(A,B)	CNPV*3117A**	58MEC060−12	27,800	12.0	14.5
4541059	CA13NA030****(A,B)	CNPV*3117A**	58MV(B,C)060−14	27,800	12.0	14.5
4541062	CA13NA030****(A,B)	CNPV*3117A**	58PH*070−16	27,800	11.5	14.0
4541060	CA13NA030****(A,B)	CNPV*3117A**	58UVB060−14	27,800	12.0	14.5
4541068	CA13NA030****(A,B)	CNPV*3117A**	58VLR105−12	28,000	12.0	14.0
4541067	CA13NA030****(A,B)	CNPV*3117A**	58VMR105−12	27,800	12.0	14.0
4735882	CA13NA030****(A,B)	CNPV*3117A**	59*N*A060V17**14	27,800	11.8	14.2
4735883	CA13NA030****(A,B)	CNPV*3117A**	59*N*A080V17**14	28,000	12.0	14.5
4735884	CA13NA030****(A,B)	CNPV*3117A**	59*P5A060E17**14	28,200	11.8	14.2
4735885	CA13NA030****(A,B)	CNPV*3117A**	59*P5A080E17**16	28,400	11.8	14.2
4541070	CA13NA030****(A,B)	CNPV*3117A**	OVLAAB036098	28,000	11.7	14.0
4541069	CA13NA030****(A,B)	CNPV*3117A**	OVMAAB036098	28,000	11.5	14.0
4541071	CA13NA030****(A,B)	CNPV*3117A**	OVMAAB042112	28,200	12.0	14.5
4541058	CA13NA030****(A,B)	CNPV*3117A**+TDR		27,800	11.0	13.0
4541075	CA13NA030****(A,B)	CNPV*3617A**	58CV(A,X)090−16	27,400	11.7	14.0
4640628	CA13NA030****(A,B)	CNPV*3617A**	58HDV040−−12	27,400	11.0	13.5
4640629	CA13NA030****(A,B)	CNPV*3617A**	58HDV060−−12	27,600	11.0	13.5
4541078	CA13NA030****(A,B)	CNPV*3617A**	58ME(B,C)060−12	27,200	12.0	14.5
4541079	CA13NA030****(A,B)	CNPV*3617A**	58ME(B,C)080−12	27,000	12.0	14.5
4541080	CA13NA030****(A,B)	CNPV*3617A**	58ME(B,C)080−16	27,800	11.7	14.0
4541077	CA13NA030****(A,B)	CNPV*3617A**	58MEB040−12	27,200	12.0	14.5
4541073	CA13NA030****(A,B)	CNPV*3617A**	58MV(B,C)060−14	27,600	11.7	14.0
4541076	CA13NA030****(A,B)	CNPV*3617A**	58PH*070−16	27,400	11.5	14.0
4541074	CA13NA030****(A,B)	CNPV*3617A**	58UVB060−14	27,600	11.7	14.0
4541082	CA13NA030****(A,B)	CNPV*3617A**	58VLR105−12	27,600	11.7	14.0
4541081	CA13NA030****(A,B)	CNPV*3617A**	58VMR105−12	27,200	11.7	14.0
4735886	CA13NA030****(A,B)	CNPV*3617A**	59*N*A060V17**14	27,400	11.5	14.0
4735887	CA13NA030****(A,B)	CNPV*3617A**	59*N*A080V17**14	27,400	11.8	14.2
4735888	CA13NA030****(A,B)	CNPV*3617A**	59*P5A060E17**14	27,600	11.5	14.0
4735889	CA13NA030****(A,B)	CNPV*3617A**	59*P5A080E17**16	27,600	11.5	14.0
4541084	CA13NA030****(A,B)	CNPV*3617A**	OVLAAB036098	27,400	11.5	13.5
4541083	CA13NA030****(A,B)	CNPV*3617A**	OVMAAB036098	27,400	11.0	13.5
4541085	CA13NA030****(A,B)	CNPV*3617A**	OVMAAB042112	27,600	11.7	14.0
4541072	CA13NA030****(A,B)	CNPV*3617A**+TDR		27,400	10.8	13.0
4541093	CA13NA030****(A,B)	CNPV*3621A**	58CV(A,X)110−20	27,400	11.7	14.0
4640630	CA13NA030****(A,B)	CNPV*3621A**	58HDV040−−12	27,400	11.0	13.5
4640631	CA13NA030****(A,B)	CNPV*3621A**	58HDV060−−12	27,600	11.0	13.5
4640632	CA13NA030****(A,B)	CNPV*3621A**	58HDV080−−20	27,800	11.5	14.0
4541087	CA13NA030****(A,B)	CNPV*3621A**	58MV(B,C)080−14	27,200	11.7	14.0
4541088	CA13NA030****(A,B)	CNPV*3621A**	58MV(B,C)080−20	27,400	11.7	14.0
4541089	CA13NA030****(A,B)	CNPV*3621A**	58MV(B,C)100−20	27,200	11.7	14.0
4541094	CA13NA030****(A,B)	CNPV*3621A**	58PH*090−16	27,600	11.7	14.0
4541090	CA13NA030****(A,B)	CNPV*3621A**	58UVB080−14	27,200	11.7	14.0
4541091	CA13NA030****(A,B)	CNPV*3621A**	58UVB080−20	27,400	11.7	14.0
4541092	CA13NA030****(A,B)	CNPV*3621A**	58UVB100−20	27,200	11.7	14.0
4735890	CA13NA030****(A,B)	CNPV*3621A**	59*N*A060V17**14	27,400	11.5	14.0
4735891	CA13NA030****(A,B)	CNPV*3621A**	59*N*A080V17**14	27,400	11.8	14.2

See notes on page 39

AHRI COMBINATION RATINGS* CONTINUED

AHRI Ref. No.	Model Number	Indoor Model	Furnace Model	Capacity	EER	SEER
4735892	CA13NA030****(A,B)	CNPV*3621A**	59*N*A100V21**20	27,600	11.8	14.2
4735893	CA13NA030****(A,B)	CNPV*3621A**	59*P5A060E17**14	27,600	11.5	14.0
4735894	CA13NA030****(A,B)	CNPV*3621A**	59*P5A080E17**16	27,800	11.5	14.0
4640634	CA13NA030****(A,B)	CNPV*3621A**	OVLAAB036098	27,400	11.5	13.5
4541095	CA13NA030****(A,B)	CNPV*3621A**	OVLAAB048112	27,600	11.5	14.0
4640633	CA13NA030****(A,B)	CNPV*3621A**	OVMAAB036098	27,400	11.5	13.5
4640635	CA13NA030****(A,B)	CNPV*3621A**	OVMAAB042112	27,600	11.7	14.0
4541086	CA13NA030****(A,B)	CNPV*3621A**+TDR		27,400	10.8	13.0
4541099	CA13NA030****(A,B)	CNPV*3717A**	58CV(A,X)090−16	28,000	12.0	14.5
4640637	CA13NA030****(A,B)	CNPV*3717A**	58HDV040−−12	28,400	11.5	14.0
4640638	CA13NA030****(A,B)	CNPV*3717A**	58HDV060−−12	28,600	11.7	14.0
4541102	CA13NA030****(A,B)	CNPV*3717A**	58ME(B,C)060−12	28,000	12.0	14.5
4541103	CA13NA030****(A,B)	CNPV*3717A**	58ME(B,C)080−12	28,000	12.0	14.5
4541104	CA13NA030****(A,B)	CNPV*3717A**	58ME(B,C)080−16	28,000	12.0	14.5
4541101	CA13NA030****(A,B)	CNPV*3717A**	58MEB040−12	28,000	12.0	14.5
4640636	CA13NA030****(A,B)	CNPV*3717A**	58MEC060−12	28,000	12.0	14.5
4541097	CA13NA030****(A,B)	CNPV*3717A**	58MV(B,C)060−14	28,000	12.0	14.5
4541100	CA13NA030****(A,B)	CNPV*3717A**	58PH*070−16	28,000	12.0	14.5
4541098	CA13NA030****(A,B)	CNPV*3717A**	58UVB060−14	28,000	12.0	14.5
4541106	CA13NA030****(A,B)	CNPV*3717A**	58VLR105−12	28,400	12.0	14.5
4541105	CA13NA030****(A,B)	CNPV*3717A**	58VMR105−12	28,000	12.0	14.5
4735895	CA13NA030****(A,B)	CNPV*3717A**	59*N*A060V17**14	28,200	12.0	14.5
4735896	CA13NA030****(A,B)	CNPV*3717A**	59*N*A080V17**14	28,400	12.0	14.5
4735897	CA13NA030****(A,B)	CNPV*3717A**	59*P5A060E17**14	28,400	12.0	14.5
4735898	CA13NA030****(A,B)	CNPV*3717A**	59*P5A080E17**16	28,600	12.0	14.5
4541108	CA13NA030****(A,B)	CNPV*3717A**	OVLAAB036098	28,200	11.7	14.0
4541107	CA13NA030****(A,B)	CNPV*3717A**	OVMAAB036098	28,200	11.7	14.0
4541109	CA13NA030****(A,B)	CNPV*3717A**	OVMAAB042112	28,400	12.0	14.5
4541096	CA13NA030****(A,B)	CNPV*3717A**+TDR		28,000	11.0	13.0
4640640	CA13NA030****(A,B)	CNPV*4217A**	58CV(A,X)090−16	27,800	12.2	14.5
4640639	CA13NA030****(A,B)	CNPV*4217A**+TDR		27,600	11.0	13.0
4773521	CA13NA030****(A,B)	CNPV*4221A**	59*N*A100V21**20	27,800	11.8	14.2
4640644	CA13NA030****(A,B)	CNPV*4221A**+TDR		27,600	11.0	13.0
4640645	CA13NA030****(A,B)	CNPV*4821A**	58PH*090−16	28,400	12.2	14.5
4541201	CA13NA030****(A,B)	CSPH*3012A**	58CV(A,X)070−12	27,200	11.7	13.5
4541202	CA13NA030****(A,B)	CSPH*3012A**	58CV(A,X)090−16	27,400	11.7	14.0
4541203	CA13NA030****(A,B)	CSPH*3012A**	58CV(A,X)110−20	27,600	11.7	14.0
4541204	CA13NA030****(A,B)	CSPH*3012A**	58CV(A,X)135−22	27,600	11.7	14.0
4541205	CA13NA030****(A,B)	CSPH*3012A**	58CV(A,X)155−22	27,600	12.0	14.0
4541212	CA13NA030****(A,B)	CSPH*3012A**	58HDV040−−12	27,400	11.0	13.5
4541213	CA13NA030****(A,B)	CSPH*3012A**	58HDV060−−12	27,400	11.0	13.5
4541214	CA13NA030****(A,B)	CSPH*3012A**	58HDV080−−20	27,400	11.5	14.0
4541215	CA13NA030****(A,B)	CSPH*3012A**	58HDV100−−20	27,400	11.5	14.0
4541209	CA13NA030****(A,B)	CSPH*3012A**	58ME(B,C)060−12	27,800	11.7	14.0
4541210	CA13NA030****(A,B)	CSPH*3012A**	58ME(B,C)080−12	27,600	11.7	14.0
4541211	CA13NA030****(A,B)	CSPH*3012A**	58ME(B,C)080−16	27,800	11.7	14.0
4541208	CA13NA030****(A,B)	CSPH*3012A**	58MEB040−12	27,800	12.0	14.0
4541196	CA13NA030****(A,B)	CSPH*3012A**	58MV(B,C)060−14	27,600	11.7	14.0
4541197	CA13NA030****(A,B)	CSPH*3012A**	58MV(B,C)080−14	27,400	11.7	14.0
4541198	CA13NA030****(A,B)	CSPH*3012A**	58MV(B,C)080−20	27,400	11.7	14.0
4541199	CA13NA030****(A,B)	CSPH*3012A**	58MV(B,C)100−20	27,200	11.7	14.0
4541200	CA13NA030****(A,B)	CSPH*3012A**	58MV(B,C)120−20	27,600	11.7	14.0
4541195	CA13NA030****(A,B)	CSPH*3012A**	58MVB040−14	27,400	11.7	13.5
4541206	CA13NA030****(A,B)	CSPH*3012A**	58PH*070−16	27,600	11.5	13.5
4541207	CA13NA030****(A,B)	CSPH*3012A**	58PH*090−16	27,600	11.7	14.0
4541217	CA13NA030****(A,B)	CSPH*3012A**	58VLR105−12	27,600	11.7	14.0
4541216	CA13NA030****(A,B)	CSPH*3012A**	58VMR105−12	27,200	11.7	14.0
4735917	CA13NA030****(A,B)	CSPH*3012A**	59*N*A060V17**14	27,400	11.5	14.0
4735918	CA13NA030****(A,B)	CSPH*3012A**	59*N*A080V17**14	27,600	11.8	14.2
4735919	CA13NA030****(A,B)	CSPH*3012A**	59*N*A100V21**20	27,600	11.8	14.2
4735920	CA13NA030****(A,B)	CSPH*3012A**	59*N*A120V24**22	27,600	11.8	14.2
4735921	CA13NA030****(A,B)	CSPH*3012A**	59*P5A060E17**14	27,600	11.5	14.0
4735922	CA13NA030****(A,B)	CSPH*3012A**	59*P5A080E17**16	27,800	11.5	14.0
4541219	CA13NA030****(A,B)	CSPH*3012A**	OVLAAB036098	27,400	11.0	13.5
4541221	CA13NA030****(A,B)	CSPH*3012A**	OVLAAB048112	27,800	11.5	13.5
4541218	CA13NA030****(A,B)	CSPH*3012A**	OVMAAB036098	27,600	11.0	13.5
4541220	CA13NA030****(A,B)	CSPH*3012A**	OVMAAB042112	27,600	11.5	14.0
4541194	CA13NA030****(A,B)	CSPH*3012A**+TDR		27,400	10.8	13.0
4541229	CA13NA030****(A,B)	CSPH*3612A**	58CV(A,X)070−12	27,800	12.0	14.0
4541230	CA13NA030****(A,B)	CSPH*3612A**	58CV(A,X)090−16	27,800	12.0	14.5
4541231	CA13NA030****(A,B)	CSPH*3612A**	58CV(A,X)110−20	27,800	12.0	14.0
4541232	CA13NA030****(A,B)	CSPH*3612A**	58CV(A,X)135−22	27,800	12.0	14.0
4541233	CA13NA030****(A,B)	CSPH*3612A**	58CV(A,X)155−22	27,800	12.0	14.0

See notes on page 39

AHRI COMBINATION RATINGS* CONTINUED

AHRI Ref. No.	Model Number	Indoor Model	Furnace Model	Capacity	EER	SEER
4541240	CA13NA030****(A,B)	CSPH*3612A**	58HDV040−−12	27,800	11.5	14.0
4541241	CA13NA030****(A,B)	CSPH*3612A**	58HDV060−−12	27,800	11.5	14.0
4541242	CA13NA030****(A,B)	CSPH*3612A**	58HDV080−−20	27,800	12.0	14.5
4541243	CA13NA030****(A,B)	CSPH*3612A**	58HDV100−−20	27,800	12.0	14.5
4541237	CA13NA030****(A,B)	CSPH*3612A**	58ME(B,C)060−12	27,400	12.0	14.5
4541238	CA13NA030****(A,B)	CSPH*3612A**	58ME(B,C)080−12	27,400	12.0	14.5
4541239	CA13NA030****(A,B)	CSPH*3612A**	58ME(B,C)080−16	27,800	12.0	14.0
4541236	CA13NA030****(A,B)	CSPH*3612A**	58MEB040−12	27,400	12.0	14.5
4541224	CA13NA030****(A,B)	CSPH*3612A**	58MV(B,C)060−14	28,000	12.0	14.0
4541225	CA13NA030****(A,B)	CSPH*3612A**	58MV(B,C)080−14	27,800	12.0	14.0
4541226	CA13NA030****(A,B)	CSPH*3612A**	58MV(B,C)080−20	27,800	12.0	14.0
4541227	CA13NA030****(A,B)	CSPH*3612A**	58MV(B,C)100−20	27,600	12.0	14.0
4541228	CA13NA030****(A,B)	CSPH*3612A**	58MV(B,C)120−20	28,000	12.0	14.0
4541223	CA13NA030****(A,B)	CSPH*3612A**	58MVB040−14	27,800	12.0	14.0
4541234	CA13NA030****(A,B)	CSPH*3612A**	58PH*070−16	27,800	11.7	13.5
4541235	CA13NA030****(A,B)	CSPH*3612A**	58PH*090−16	27,800	12.0	14.0
4541245	CA13NA030****(A,B)	CSPH*3612A**	58VLR105−12	28,000	12.0	14.0
4541244	CA13NA030****(A,B)	CSPH*3612A**	58VMR105−12	27,600	12.0	14.0
4735923	CA13NA030****(A,B)	CSPH*3612A**	59*N*A060V17**14	27,800	11.8	14.2
4735924	CA13NA030****(A,B)	CSPH*3612A**	59*N*A080V17**14	28,000	12.0	14.5
4735925	CA13NA030****(A,B)	CSPH*3612A**	59*N*A100V21**20	28,200	12.0	14.5
4735926	CA13NA030****(A,B)	CSPH*3612A**	59*N*A120V24**22	28,000	12.0	14.5
4735927	CA13NA030****(A,B)	CSPH*3612A**	59*P5A060E17**14	28,000	11.8	14.2
4735928	CA13NA030****(A,B)	CSPH*3612A**	59*P5A080E17**16	28,200	11.8	14.2
4541247	CA13NA030****(A,B)	CSPH*3612A**	OVLAAB036098	28,000	11.7	14.0
4541249	CA13NA030****(A,B)	CSPH*3612A**	OVLAAB048112	28,200	11.7	14.0
4541246	CA13NA030****(A,B)	CSPH*3612A**	OVMAAB036098	28,000	11.5	14.0
4541248	CA13NA030****(A,B)	CSPH*3612A**	OVMAAB042112	28,000	12.0	14.5
4541222	CA13NA030****(A,B)	CSPH*3612A**+TDR		27,400	10.8	13.0
4640643	CA13NA030****(A,B)	CSPH*4212A**+TDR		27,600	11.0	13.0
4541261	CA13NA030****(A,B)	FB4CNF030		27,400	11.0	13.5
4541260	CA13NA030****(A,B)	FB4CNF030+TXV		27,400	11.5	14.0
4541263	CA13NA030****(A,B)	FB4CNF036		27,400	11.0	13.5
4541262	CA13NA030****(A,B)	FB4CNF036+TXV		27,400	11.5	14.0
4541265	CA13NA030****(A,B)	FB4CNF042		28,400	11.2	13.0
4541264	CA13NA030****(A,B)	FB4CNF042+TXV		28,400	11.2	13.5
4541253	CA13NA030****(A,B)	FE4AN(B,F)003+UI		27,600	12.2	14.5
4642303	CA13NA030****(A,B)	FE4AN(B,F)005+UI		28,400	12.2	14.5
4541252	CA13NA030****(A,B)	FE4ANF002+UI		27,600	11.7	14.0
4541254	CA13NA030****(A,B)	FF1ENP030		27,200	10.6	13.0
4541255	CA13NA030****(A,B)	FF1ENP031		27,600	11.7	13.5
4541256	CA13NA030****(A,B)	FF1ENP036		27,400	10.9	13.0
4541257	CA13NA030****(A,B)	FF1ENP037		27,800	11.5	13.5
4541259	CA13NA030****(A,B)	FV4CN(B,F)003		27,600	12.2	14.5
4642304	CA13NA030****(A,B)	FV4CN(B,F)005		28,400	12.2	14.5
4541258	CA13NA030****(A,B)	FV4CNF002		27,600	11.7	14.0
4541250	CA13NA030****(A,B)	FX4DN(B,F)031		27,800	11.5	14.0
4541251	CA13NA030****(A,B)	FX4DN(B,F)037		28,000	12.0	14.5
4640647	CA13NA030****(A,B)	FX4DN(B,F)043		28,000	11.0	13.5
4541267	CA13NA030****(A,B)	FY5BNF030		27,600	11.0	13.0
4541266	CA13NA030****(A,B)	FY5BNF030+TXV		27,600	11.0	13.5
4541269	CA13NA030****(A,B)	FY5BNF036		27,600	11.0	13.0
4541268	CA13NA030****(A,B)	FY5BNF036+TXV		27,600	11.0	13.0
4541270	CA13NA036****(A,B)	†CAP**4821A**+TDR		34,000	11.0	13.0
4541271	CA13NA036****(A,B)	CAP**3614A**	58CV(A,X)070−12	32,400	11.0	13.5
4541272	CA13NA036****(A,B)	CAP**3614A**	58PH*045−08	32,800	11.0	13.0
4541275	CA13NA036****(A,B)	CAP**3617A**	58CV(A,X)090−16	33,400	11.7	14.0
4541278	CA13NA036****(A,B)	CAP**3617A**	58ME(B,C)060−12	33,600	11.7	14.0
4541279	CA13NA036****(A,B)	CAP**3617A**	58ME(B,C)080−12	33,400	11.7	14.0
4541280	CA13NA036****(A,B)	CAP**3617A**	58ME(B,C)080−16	33,600	11.7	14.0
4541277	CA13NA036****(A,B)	CAP**3617A**	58MEB040−12	33,600	11.7	14.0
4541273	CA13NA036****(A,B)	CAP**3617A**	58MV(B,C)060−14	33,400	11.5	13.5
4541276	CA13NA036****(A,B)	CAP**3617A**	58PH*070−16	33,200	11.2	13.5
4541274	CA13NA036****(A,B)	CAP**3617A**	58UVB060−14	33,400	11.5	13.5
4541282	CA13NA036****(A,B)	CAP**3617A**	58VLR105−12	33,400	11.0	13.5
4541281	CA13NA036****(A,B)	CAP**3617A**	58VMR105−12	33,000	11.5	13.5
4742075	CA13NA036****(A,B)	CAP**3617A**	59*N*A060V17**14	32,800	11.4	13.7
4742076	CA13NA036****(A,B)	CAP**3617A**	59*N*A080V17**14	32,800	11.4	13.7
4742077	CA13NA036****(A,B)	CAP**3617A**	59*P5A060E17**14	33,000	11.2	13.5
4742078	CA13NA036****(A,B)	CAP**3617A**	59*P5A080E17**16	33,000	11.4	13.7
4541284	CA13NA036****(A,B)	CAP**3617A**	OVLAAB036098	33,200	11.0	13.2
4541283	CA13NA036****(A,B)	CAP**3617A**	OVMAAB036098	33,200	11.0	13.2

See notes on page 39

AHRI COMBINATION RATINGS* CONTINUED

AHRI Ref. No.	Model Number	Indoor Model	Furnace Model	Capacity	EER	SEER
4541285	CA13NA036****(A,B)	CAP**3617A**	OVMAAB042112	33,400	11.0	13.5
4541318	CA13NA036****(A,B)	CAP**3619A**	58HDV040– –12	33,000	11.0	13.0
4541319	CA13NA036****(A,B)	CAP**3619A**	58HDV060– –12	33,400	11.0	13.0
4742091	CA13NA036****(A,B)	CAP**3619A**	59*N*A060V17**14	32,800	11.4	13.7
4742092	CA13NA036****(A,B)	CAP**3619A**	59*N*A080V17**14	32,800	11.4	13.7
4742093	CA13NA036****(A,B)	CAP**3619A**	59*N*A100V21**20	33,000	11.4	13.7
4742094	CA13NA036****(A,B)	CAP**3619A**	59*P5A060E17**14	33,000	11.2	13.5
4742095	CA13NA036****(A,B)	CAP**3619A**	59*P5A080E17**16	33,000	11.4	13.7
4541292	CA13NA036****(A,B)	CAP**3621A**	58CV(A,X)110–20	33,400	11.7	14.0
4541295	CA13NA036****(A,B)	CAP**3621A**	58ME(B,C)100–20	33,600	12.0	14.0
4541286	CA13NA036****(A,B)	CAP**3621A**	58MV(B,C)080–14	33,400	11.5	13.5
4541287	CA13NA036****(A,B)	CAP**3621A**	58MV(B,C)080–20	33,400	11.7	14.0
4541288	CA13NA036****(A,B)	CAP**3621A**	58MV(B,C)100–20	33,400	11.7	14.0
4541293	CA13NA036****(A,B)	CAP**3621A**	58PH*090–16	33,600	11.9	14.0
4541294	CA13NA036****(A,B)	CAP**3621A**	58PH*110–20	33,800	11.9	14.0
4541289	CA13NA036****(A,B)	CAP**3621A**	58UVB080–14	33,400	11.5	13.5
4541290	CA13NA036****(A,B)	CAP**3621A**	58UVB080–20	33,400	11.7	14.0
4541291	CA13NA036****(A,B)	CAP**3621A**	58UVB100–20	33,400	11.7	14.0
4541297	CA13NA036****(A,B)	CAP**3621A**	58VLR120–20	33,400	11.7	14.0
4541296	CA13NA036****(A,B)	CAP**3621A**	58VMR120–20	33,200	11.7	14.0
4742079	CA13NA036****(A,B)	CAP**3621A**	59*N*A060V17**14	32,800	11.4	13.7
4742080	CA13NA036****(A,B)	CAP**3621A**	59*N*A080V17**14	32,800	11.4	13.7
4742081	CA13NA036****(A,B)	CAP**3621A**	59*N*A100V21**20	33,000	11.5	14.0
4742082	CA13NA036****(A,B)	CAP**3621A**	59*P5A060E17**14	33,200	11.4	13.7
4742083	CA13NA036****(A,B)	CAP**3621A**	59*P5A080E17**16	33,200	11.4	13.7
4541298	CA13NA036****(A,B)	CAP**3621A**	OVLAAB048112	33,400	11.5	13.5
4541305	CA13NA036****(A,B)	CAP**4221A**	58CV(A,X)110–20	33,600	11.9	14.0
4541308	CA13NA036****(A,B)	CAP**4221A**	58ME(B,C)100–20	33,800	12.0	14.0
4541299	CA13NA036****(A,B)	CAP**4221A**	58MV(B,C)080–14	33,600	11.5	13.5
4541300	CA13NA036****(A,B)	CAP**4221A**	58MV(B,C)080–20	33,600	11.7	14.0
4541301	CA13NA036****(A,B)	CAP**4221A**	58MV(B,C)100–20	33,600	11.7	14.0
4541306	CA13NA036****(A,B)	CAP**4221A**	58PH*090–16	33,800	12.0	14.0
4541307	CA13NA036****(A,B)	CAP**4221A**	58PH*110–20	34,000	12.0	14.0
4541302	CA13NA036****(A,B)	CAP**4221A**	58UVB080–14	33,600	11.5	13.5
4541303	CA13NA036****(A,B)	CAP**4221A**	58UVB080–20	33,600	11.7	14.0
4541304	CA13NA036****(A,B)	CAP**4221A**	58UVB100–20	33,600	11.7	14.0
4541310	CA13NA036****(A,B)	CAP**4221A**	58VLR120–20	33,600	11.7	14.0
4541309	CA13NA036****(A,B)	CAP**4221A**	58VMR120–20	33,600	11.7	14.0
4742084	CA13NA036****(A,B)	CAP**4221A**	59*N*A060V17**14	33,000	11.4	13.7
4742085	CA13NA036****(A,B)	CAP**4221A**	59*N*A080V17**14	33,200	11.5	14.0
4742086	CA13NA036****(A,B)	CAP**4221A**	59*N*A100V21**20	33,200	11.5	14.0
4742087	CA13NA036****(A,B)	CAP**4221A**	59*P5A060E17**14	33,400	11.4	13.7
4742088	CA13NA036****(A,B)	CAP**4221A**	59*P5A080E17**16	33,400	11.4	13.7
4541311	CA13NA036****(A,B)	CAP**4221A**	OVLAAB048112	33,800	11.5	13.5
4541315	CA13NA036****(A,B)	CAP**4224A**	58CV(A,X)135–22	33,600	12.0	14.0
4541316	CA13NA036****(A,B)	CAP**4224A**	58CV(A,X)155–22	33,800	12.0	14.0
4541317	CA13NA036****(A,B)	CAP**4224A**	58HDV100– –20	33,800	11.5	14.0
4541313	CA13NA036****(A,B)	CAP**4224A**	58MV(B,C)120–20	33,600	12.0	14.0
4541312	CA13NA036****(A,B)	CAP**4224A**	58MVB040–14	33,400	11.7	14.0
4541314	CA13NA036****(A,B)	CAP**4224A**	58UVB120–20	33,600	12.0	14.0
4742089	CA13NA036****(A,B)	CAP**4224A**	59*N*A100V21**20	33,200	11.8	14.2
4742090	CA13NA036****(A,B)	CAP**4224A**	59*N*A120V24**22	33,200	11.8	14.2
4541579	CA13NA036****(A,B)	CAP**4817A**	58CV(A,X)090–16	34,600	11.7	14.0
4541582	CA13NA036****(A,B)	CAP**4817A**	58ME(B,C)060–12	34,400	11.7	14.0
4541583	CA13NA036****(A,B)	CAP**4817A**	58ME(B,C)080–12	34,200	11.7	14.0
4541584	CA13NA036****(A,B)	CAP**4817A**	58ME(B,C)080–16	34,400	11.7	14.0
4541581	CA13NA036****(A,B)	CAP**4817A**	58MEB040–12	34,400	11.7	14.0
4541577	CA13NA036****(A,B)	CAP**4817A**	58MV(B,C)060–14	34,800	11.5	13.7
4541580	CA13NA036****(A,B)	CAP**4817A**	58PH*070–16	34,000	11.5	13.7
4541578	CA13NA036****(A,B)	CAP**4817A**	58UVB060–14	34,800	11.5	13.7
4541585	CA13NA036****(A,B)	CAP**4817A**	OVMAAB042112	34,000	11.7	14.0
4541576	CA13NA036****(A,B)	CAP**4817A**+TDR		34,200	11.0	13.0
4541592	CA13NA036****(A,B)	CAP**4821A**	58CV(A,X)110–20	33,800	11.7	14.0
4541595	CA13NA036****(A,B)	CAP**4821A**	58ME(B,C)100–20	34,000	12.0	14.0
4541586	CA13NA036****(A,B)	CAP**4821A**	58MV(B,C)080–14	33,800	11.5	13.7
4541587	CA13NA036****(A,B)	CAP**4821A**	58MV(B,C)080–20	33,800	11.7	14.0
4541588	CA13NA036****(A,B)	CAP**4821A**	58MV(B,C)100–20	34,000	11.7	14.0
4541593	CA13NA036****(A,B)	CAP**4821A**	58PH*090–16	34,200	11.7	14.0
4541594	CA13NA036****(A,B)	CAP**4821A**	58PH*110–20	34,200	11.7	14.0
4541589	CA13NA036****(A,B)	CAP**4821A**	58UVB080–14	33,800	11.5	13.7
4541590	CA13NA036****(A,B)	CAP**4821A**	58UVB080–20	33,800	11.7	14.0
4541591	CA13NA036****(A,B)	CAP**4821A**	58UVB100–20	34,000	11.7	14.0
4541597	CA13NA036****(A,B)	CAP**4821A**	58VLR120–20	33,800	11.7	14.0

See notes on page 39

AHRI COMBINATION RATINGS* CONTINUED

AHRI Ref. No.	Model Number	Indoor Model	Furnace Model	Capacity	EER	SEER
4541596	CA13NA036****(A,B)	CAP**4821A**	58VMR120−20	33,800	11.7	14.0
4773522	CA13NA036****(A,B)	CAP**4821A**	59*N*A100V21**20	33,800	11.8	14.2
4541598	CA13NA036****(A,B)	CAP**4821A**	OVLAAB048112	34,000	11.5	13.7
4541609	CA13NA036****(A,B)	CAP**4823A**	58HDV080−−20	34,400	11.5	13.7
4541608	CA13NA036****(A,B)	CAP**4823A**+TDR		34,000	10.9	13.0
4541603	CA13NA036****(A,B)	CAP**4824A**	58CV(A,X)135−22	33,800	12.0	14.0
4541604	CA13NA036****(A,B)	CAP**4824A**	58CV(A,X)155−22	34,000	12.0	14.5
4541607	CA13NA036****(A,B)	CAP**4824A**	58HDV100−−20	34,400	11.7	14.0
4541606	CA13NA036****(A,B)	CAP**4824A**	58ME(B,C)120−20	34,800	11.7	14.0
4541601	CA13NA036****(A,B)	CAP**4824A**	58MV(B,C)120−20	33,800	11.7	14.0
4541600	CA13NA036****(A,B)	CAP**4824A**	58MVB040−14	33,600	11.5	13.7
4541605	CA13NA036****(A,B)	CAP**4824A**	58PH*135−20	34,600	11.7	14.0
4541602	CA13NA036****(A,B)	CAP**4824A**	58UVB120−20	33,800	11.7	14.0
4773523	CA13NA036****(A,B)	CAP**4824A**	59*N*A100V21**20	33,800	11.8	14.2
4541599	CA13NA036****(A,B)	CAP**4824A**+TDR		34,000	10.9	13.0
4663955	CA13NA036****(A,B)	CAP**6025A**+TDR		34,600	11.0	13.0
4541401	CA13NA036****(A,B)	CNPH*3617A**	58CV(A,X)070−12	33,200	11.5	13.5
4541402	CA13NA036****(A,B)	CNPH*3617A**	58CV(A,X)090−16	33,200	11.5	13.5
4541403	CA13NA036****(A,B)	CNPH*3617A**	58CV(A,X)110−20	33,200	11.5	13.5
4541404	CA13NA036****(A,B)	CNPH*3617A**	58CV(A,X)135−22	33,200	11.7	14.0
4541405	CA13NA036****(A,B)	CNPH*3617A**	58CV(A,X)155−22	33,000	11.7	14.0
4541415	CA13NA036****(A,B)	CNPH*3617A**	58HDV040−−12	33,000	11.0	13.0
4541416	CA13NA036****(A,B)	CNPH*3617A**	58HDV060−−12	33,200	11.0	13.2
4541417	CA13NA036****(A,B)	CNPH*3617A**	58HDV080−−20	33,600	11.0	13.2
4541418	CA13NA036****(A,B)	CNPH*3617A**	58HDV100−−20	33,400	11.0	13.5
4541411	CA13NA036****(A,B)	CNPH*3617A**	58ME(B,C)060−12	33,400	11.5	13.5
4541412	CA13NA036****(A,B)	CNPH*3617A**	58ME(B,C)080−12	33,400	11.0	13.5
4541413	CA13NA036****(A,B)	CNPH*3617A**	58ME(B,C)080−16	33,400	11.5	13.5
4541414	CA13NA036****(A,B)	CNPH*3617A**	58ME(B,C)100−20	33,200	11.7	14.0
4541410	CA13NA036****(A,B)	CNPH*3617A**	58MEB040−12	33,400	11.7	14.0
4541396	CA13NA036****(A,B)	CNPH*3617A**	58MV(B,C)060−14	33,400	11.5	13.5
4541397	CA13NA036****(A,B)	CNPH*3617A**	58MV(B,C)080−14	33,200	11.5	13.5
4541398	CA13NA036****(A,B)	CNPH*3617A**	58MV(B,C)080−20	33,200	11.5	13.5
4541399	CA13NA036****(A,B)	CNPH*3617A**	58MV(B,C)100−20	33,400	11.5	13.5
4541400	CA13NA036****(A,B)	CNPH*3617A**	58MV(B,C)120−20	33,200	11.5	13.5
4541395	CA13NA036****(A,B)	CNPH*3617A**	58MVB040−14	33,000	11.0	13.5
4541406	CA13NA036****(A,B)	CNPH*3617A**	58PH*045−08	33,000	11.0	13.0
4541407	CA13NA036****(A,B)	CNPH*3617A**	58PH*070−16	33,200	11.0	13.5
4541408	CA13NA036****(A,B)	CNPH*3617A**	58PH*090−16	33,400	11.7	14.0
4541409	CA13NA036****(A,B)	CNPH*3617A**	58PH*110−20	33,400	11.7	14.0
4541420	CA13NA036****(A,B)	CNPH*3617A**	58VLR105−12	33,400	11.0	13.5
4541422	CA13NA036****(A,B)	CNPH*3617A**	58VLR120−20	33,200	11.5	14.0
4541419	CA13NA036****(A,B)	CNPH*3617A**	58VMR105−12	33,000	11.0	13.5
4541421	CA13NA036****(A,B)	CNPH*3617A**	58VMR120−20	33,200	11.0	13.5
4742120	CA13NA036****(A,B)	CNPH*3617A**	59*N*A060V17**14	30,000	11.2	13.5
4742121	CA13NA036****(A,B)	CNPH*3617A**	59*N*A080V17**14	32,800	11.4	13.7
4742122	CA13NA036****(A,B)	CNPH*3617A**	59*N*A100V21**20	32,800	11.4	13.7
4742123	CA13NA036****(A,B)	CNPH*3617A**	59*N*A120V24**22	33,000	11.5	14.0
4742124	CA13NA036****(A,B)	CNPH*3617A**	59*P5A060E17**14	33,000	11.2	13.5
4742125	CA13NA036****(A,B)	CNPH*3617A**	59*P5A080E17**16	33,000	11.4	13.7
4541424	CA13NA036****(A,B)	CNPH*3617A**	OVLAAB036098	33,000	11.0	13.2
4541426	CA13NA036****(A,B)	CNPH*3617A**	OVLAAB048112	33,400	11.0	13.2
4541427	CA13NA036****(A,B)	CNPH*3617A**	OVLAAB060154	34,000	11.5	13.5
4541423	CA13NA036****(A,B)	CNPH*3617A**	OVMAAB036098	33,000	11.0	13.2
4541425	CA13NA036****(A,B)	CNPH*3617A**	OVMAAB042112	33,200	11.0	13.2
4541435	CA13NA036****(A,B)	CNPH*4221A**	58CV(A,X)070−12	33,400	11.5	13.5
4541436	CA13NA036****(A,B)	CNPH*4221A**	58CV(A,X)090−16	33,600	11.7	14.0
4541437	CA13NA036****(A,B)	CNPH*4221A**	58CV(A,X)110−20	33,600	11.7	14.0
4541438	CA13NA036****(A,B)	CNPH*4221A**	58CV(A,X)135−22	33,600	11.7	14.0
4541439	CA13NA036****(A,B)	CNPH*4221A**	58CV(A,X)155−22	33,800	12.0	14.0
4541449	CA13NA036****(A,B)	CNPH*4221A**	58HDV040−−12	33,400	11.0	13.2
4541450	CA13NA036****(A,B)	CNPH*4221A**	58HDV060−−12	33,600	11.2	13.2
4541451	CA13NA036****(A,B)	CNPH*4221A**	58HDV080−−20	34,200	11.5	13.5
4541452	CA13NA036****(A,B)	CNPH*4221A**	58HDV100−−20	34,000	11.5	13.5
4541445	CA13NA036****(A,B)	CNPH*4221A**	58ME(B,C)060−12	33,800	11.7	14.0
4541446	CA13NA036****(A,B)	CNPH*4221A**	58ME(B,C)080−12	33,800	11.7	14.0
4541447	CA13NA036****(A,B)	CNPH*4221A**	58ME(B,C)080−16	33,800	11.7	14.0
4541448	CA13NA036****(A,B)	CNPH*4221A**	58ME(B,C)100−20	33,800	11.7	14.0
4541444	CA13NA036****(A,B)	CNPH*4221A**	58MEB040−12	33,800	11.7	14.0
4541430	CA13NA036****(A,B)	CNPH*4221A**	58MV(B,C)060−14	33,800	11.7	14.0
4541431	CA13NA036****(A,B)	CNPH*4221A**	58MV(B,C)080−14	33,600	11.5	13.5
4541432	CA13NA036****(A,B)	CNPH*4221A**	58MV(B,C)080−20	33,600	11.7	14.0
4541433	CA13NA036****(A,B)	CNPH*4221A**	58MV(B,C)100−20	33,600	11.7	14.0

See notes on page 39

AHRI COMBINATION RATINGS* CONTINUED

AHRI Ref. No.	Model Number	Indoor Model	Furnace Model	Capacity	EER	SEER
4541434	CA13NA036****(A,B)	CNPH*4221A**	58MV(B,C)120−20	33,600	11.7	14.0
4541429	CA13NA036****(A,B)	CNPH*4221A**	58MVB040−14	33,400	11.5	13.5
4541440	CA13NA036****(A,B)	CNPH*4221A**	58PH*045−08	33,600	11.0	13.0
4541441	CA13NA036****(A,B)	CNPH*4221A**	58PH*070−16	33,600	11.2	13.5
4541442	CA13NA036****(A,B)	CNPH*4221A**	58PH*090−16	33,800	11.7	14.0
4541443	CA13NA036****(A,B)	CNPH*4221A**	58PH*110−20	34,000	12.0	14.0
4541454	CA13NA036****(A,B)	CNPH*4221A**	58VLR105−12	33,800	11.5	13.5
4541456	CA13NA036****(A,B)	CNPH*4221A**	58VLR120−20	33,600	11.7	14.0
4541453	CA13NA036****(A,B)	CNPH*4221A**	58VMR105−12	33,400	11.5	13.5
4541455	CA13NA036****(A,B)	CNPH*4221A**	58VMR120−20	33,600	11.7	14.0
4742126	CA13NA036****(A,B)	CNPH*4221A**	59*N*A060V17**14	33,000	11.4	13.7
4742127	CA13NA036****(A,B)	CNPH*4221A**	59*N*A080V17**14	33,200	11.4	13.7
4742128	CA13NA036****(A,B)	CNPH*4221A**	59*N*A100V21**20	33,200	11.5	14.0
4742129	CA13NA036****(A,B)	CNPH*4221A**	59*N*A120V24**22	33,200	11.8	14.2
4742130	CA13NA036****(A,B)	CNPH*4221A**	59*P5A060E17**14	33,400	11.4	13.7
4742131	CA13NA036****(A,B)	CNPH*4221A**	59*P5A080E17**16	33,400	11.4	13.7
4541458	CA13NA036****(A,B)	CNPH*4221A**	OVLAAB036098	33,400	11.0	13.2
4541460	CA13NA036****(A,B)	CNPH*4221A**	OVLAAB048112	33,800	11.5	13.5
4541461	CA13NA036****(A,B)	CNPH*4221A**	OVLAAB060154	34,400	11.5	13.5
4541457	CA13NA036****(A,B)	CNPH*4221A**	OVMAAB036098	33,400	11.0	13.2
4541459	CA13NA036****(A,B)	CNPH*4221A**	OVMAAB042112	33,600	11.5	13.5
4541428	CA13NA036****(A,B)	CNPH*4221A**+TDR		33,800	10.9	13.0
4541469	CA13NA036****(A,B)	CNPH*4321A**	58CV(A,X)070−12	34,400	11.5	14.0
4541470	CA13NA036****(A,B)	CNPH*4321A**	58CV(A,X)090−16	34,600	12.0	14.5
4541471	CA13NA036****(A,B)	CNPH*4321A**	58CV(A,X)110−20	34,600	12.0	14.5
4541472	CA13NA036****(A,B)	CNPH*4321A**	58CV(A,X)135−22	34,600	12.0	14.5
4541473	CA13NA036****(A,B)	CNPH*4321A**	58CV(A,X)155−22	34,600	12.0	14.5
4541483	CA13NA036****(A,B)	CNPH*4321A**	58HDV040−−12	34,400	11.0	13.5
4541484	CA13NA036****(A,B)	CNPH*4321A**	58HDV060−−12	34,800	11.5	14.0
4541485	CA13NA036****(A,B)	CNPH*4321A**	58HDV080−−20	34,800	11.5	14.0
4541486	CA13NA036****(A,B)	CNPH*4321A**	58HDV100−−20	34,800	12.0	14.5
4541479	CA13NA036****(A,B)	CNPH*4321A**	58ME(B,C)060−12	34,800	12.0	14.5
4541480	CA13NA036****(A,B)	CNPH*4321A**	58ME(B,C)080−12	34,800	12.0	14.5
4541481	CA13NA036****(A,B)	CNPH*4321A**	58ME(B,C)080−16	34,800	12.0	14.5
4541482	CA13NA036****(A,B)	CNPH*4321A**	58ME(B,C)100−20	34,800	12.0	14.5
4541478	CA13NA036****(A,B)	CNPH*4321A**	58MEB040−12	34,800	12.0	14.5
4541464	CA13NA036****(A,B)	CNPH*4321A**	58MV(B,C)060−14	34,800	12.0	14.5
4541465	CA13NA036****(A,B)	CNPH*4321A**	58MV(B,C)080−14	34,600	11.5	14.0
4541466	CA13NA036****(A,B)	CNPH*4321A**	58MV(B,C)080−20	34,400	12.0	14.5
4541467	CA13NA036****(A,B)	CNPH*4321A**	58MV(B,C)100−20	34,600	12.0	14.5
4541468	CA13NA036****(A,B)	CNPH*4321A**	58MV(B,C)120−20	34,600	12.0	14.5
4541463	CA13NA036****(A,B)	CNPH*4321A**	58MVB040−14	34,400	11.5	14.0
4541474	CA13NA036****(A,B)	CNPH*4321A**	58PH*045−08	34,600	11.0	13.5
4541475	CA13NA036****(A,B)	CNPH*4321A**	58PH*070−16	34,600	11.0	13.5
4541476	CA13NA036****(A,B)	CNPH*4321A**	58PH*090−16	34,800	12.0	14.5
4541477	CA13NA036****(A,B)	CNPH*4321A**	58PH*110−20	34,800	12.0	14.5
4541488	CA13NA036****(A,B)	CNPH*4321A**	58VLR105−12	34,600	11.7	14.0
4541490	CA13NA036****(A,B)	CNPH*4321A**	58VLR120−20	34,600	12.0	14.5
4541487	CA13NA036****(A,B)	CNPH*4321A**	58VMR105−12	34,200	11.7	14.0
4541489	CA13NA036****(A,B)	CNPH*4321A**	58VMR120−20	34,400	12.0	14.5
4742132	CA13NA036****(A,B)	CNPH*4321A**	59*N*A060V17**14	33,800	11.8	14.2
4742133	CA13NA036****(A,B)	CNPH*4321A**	59*N*A080V17**14	34,000	11.8	14.2
4742134	CA13NA036****(A,B)	CNPH*4321A**	59*N*A100V21**20	34,200	12.0	14.5
4742135	CA13NA036****(A,B)	CNPH*4321A**	59*N*A120V24**22	34,200	12.0	14.5
4742136	CA13NA036****(A,B)	CNPH*4321A**	59*P5A060E17**14	34,400	11.5	14.0
4742137	CA13NA036****(A,B)	CNPH*4321A**	59*P5A080E17**16	34,400	11.8	14.2
4541492	CA13NA036****(A,B)	CNPH*4321A**	OVLAAB036098	34,400	11.7	13.5
4541494	CA13NA036****(A,B)	CNPH*4321A**	OVLAAB048112	34,800	11.7	14.0
4541495	CA13NA036****(A,B)	CNPH*4321A**	OVLAAB060154	34,800	12.2	14.0
4541491	CA13NA036****(A,B)	CNPH*4321A**	OVMAAB036098	34,400	11.7	13.5
4541493	CA13NA036****(A,B)	CNPH*4321A**	OVMAAB042112	34,600	12.0	14.0
4541462	CA13NA036****(A,B)	CNPH*4321A**+TDR		34,800	11.0	13.0
4541640	CA13NA036****(A,B)	CNPH*4821A**	58CV(A,X)070−12	33,800	11.7	14.0
4541641	CA13NA036****(A,B)	CNPH*4821A**	58CV(A,X)090−16	34,000	12.0	14.5
4541642	CA13NA036****(A,B)	CNPH*4821A**	58CV(A,X)110−20	34,000	11.7	14.0
4541643	CA13NA036****(A,B)	CNPH*4821A**	58CV(A,X)135−22	34,000	12.0	14.0
4541644	CA13NA036****(A,B)	CNPH*4821A**	58CV(A,X)155−22	34,000	12.0	14.5
4541655	CA13NA036****(A,B)	CNPH*4821A**	58HDV060−−12	34,200	11.3	13.5
4541656	CA13NA036****(A,B)	CNPH*4821A**	58HDV080−−20	34,600	11.5	13.7
4541657	CA13NA036****(A,B)	CNPH*4821A**	58HDV100−−20	34,400	11.7	14.0
4541650	CA13NA036****(A,B)	CNPH*4821A**	58ME(B,C)060−12	34,400	11.7	14.0
4541651	CA13NA036****(A,B)	CNPH*4821A**	58ME(B,C)080−12	34,200	12.0	14.5
4541652	CA13NA036****(A,B)	CNPH*4821A**	58ME(B,C)080−16	34,400	11.7	14.0

See notes on page 39

AHRI COMBINATION RATINGS* CONTINUED

AHRI Ref. No.	Model Number	Indoor Model	Furnace Model	Capacity	EER	SEER
4541653	CA13NA036****(A,B)	CNPH*4821A**	58ME(B,C)100−20	34,200	12.0	14.5
4541654	CA13NA036****(A,B)	CNPH*4821A**	58ME(B,C)120−20	34,800	12.0	14.0
4541649	CA13NA036****(A,B)	CNPH*4821A**	58MEB040−12	34,200	11.7	14.0
4541635	CA13NA036****(A,B)	CNPH*4821A**	58MV(B,C)060−14	34,200	11.7	14.0
4541636	CA13NA036****(A,B)	CNPH*4821A**	58MV(B,C)080−14	34,000	11.7	14.0
4541637	CA13NA036****(A,B)	CNPH*4821A**	58MV(B,C)080−20	33,800	11.7	14.0
4541638	CA13NA036****(A,B)	CNPH*4821A**	58MV(B,C)100−20	34,000	11.7	14.0
4541639	CA13NA036****(A,B)	CNPH*4821A**	58MV(B,C)120−20	34,000	11.7	14.0
4541634	CA13NA036****(A,B)	CNPH*4821A**	58MVB040−14	33,800	11.7	14.0
4541645	CA13NA036****(A,B)	CNPH*4821A**	58PH*070−16	34,000	11.5	13.7
4541646	CA13NA036****(A,B)	CNPH*4821A**	58PH*090−16	34,400	12.0	14.0
4541647	CA13NA036****(A,B)	CNPH*4821A**	58PH*110−20	34,400	12.0	14.0
4541648	CA13NA036****(A,B)	CNPH*4821A**	58PH*135−20	34,800	11.7	14.0
4541659	CA13NA036****(A,B)	CNPH*4821A**	58VLR120−20	34,000	12.0	14.0
4541658	CA13NA036****(A,B)	CNPH*4821A**	58VMR120−20	33,800	11.7	14.0
4541661	CA13NA036****(A,B)	CNPH*4821A**	OVLAAB048112	34,200	11.5	13.7
4541662	CA13NA036****(A,B)	CNPH*4821A**	OVLAAB060154	34,800	11.7	14.0
4541660	CA13NA036****(A,B)	CNPH*4821A**	OVMAAB042112	34,000	11.7	14.0
4541633	CA13NA036****(A,B)	CNPH*4821A**+TDR		34,200	11.0	13.0
4541322	CA13NA036****(A,B)	CNPV*3617A**	58CV(A,X)090−16	33,200	11.5	14.0
4660084	CA13NA036****(A,B)	CNPV*3617A**	58HDV040−−12	33,000	11.0	13.0
4660085	CA13NA036****(A,B)	CNPV*3617A**	58HDV060−−12	33,000	11.0	13.2
4541325	CA13NA036****(A,B)	CNPV*3617A**	58ME(B,C)060−12	33,400	11.5	13.5
4541326	CA13NA036****(A,B)	CNPV*3617A**	58ME(B,C)080−12	33,400	11.7	14.0
4541327	CA13NA036****(A,B)	CNPV*3617A**	58ME(B,C)080−16	33,400	11.5	13.5
4541324	CA13NA036****(A,B)	CNPV*3617A**	58MEB040−12	33,400	11.7	14.0
4541320	CA13NA036****(A,B)	CNPV*3617A**	58MV(B,C)060−14	33,400	11.5	13.5
4541323	CA13NA036****(A,B)	CNPV*3617A**	58PH*070−16	33,200	11.2	13.5
4541321	CA13NA036****(A,B)	CNPV*3617A**	58UVB060−14	33,400	11.5	13.5
4541329	CA13NA036****(A,B)	CNPV*3617A**	58VLR105−12	33,400	11.0	13.5
4541328	CA13NA036****(A,B)	CNPV*3617A**	58VMR105−12	33,000	11.0	13.5
4742096	CA13NA036****(A,B)	CNPV*3617A**	59*N*A060V17**14	30,000	11.2	13.5
4742097	CA13NA036****(A,B)	CNPV*3617A**	59*N*A080V17**14	32,800	11.4	13.7
4742098	CA13NA036****(A,B)	CNPV*3617A**	59*P5A060E17**14	33,000	11.2	13.5
4742099	CA13NA036****(A,B)	CNPV*3617A**	59*P5A080E17**16	33,000	11.4	13.7
4541331	CA13NA036****(A,B)	CNPV*3617A**	OVLAAB036098	33,000	11.0	13.2
4541330	CA13NA036****(A,B)	CNPV*3617A**	OVMAAB036098	33,000	11.0	13.2
4541332	CA13NA036****(A,B)	CNPV*3617A**	OVMAAB042112	33,200	11.0	13.5
4541339	CA13NA036****(A,B)	CNPV*3621A**	58CV(A,X)110−20	33,200	11.5	13.5
4660086	CA13NA036****(A,B)	CNPV*3621A**	58HDV040−−12	33,000	11.0	13.0
4660087	CA13NA036****(A,B)	CNPV*3621A**	58HDV060−−12	33,200	11.0	13.2
4660088	CA13NA036****(A,B)	CNPV*3621A**	58HDV080−−20	33,600	11.0	13.5
4541342	CA13NA036****(A,B)	CNPV*3621A**	58ME(B,C)100−20	33,200	11.7	14.0
4541333	CA13NA036****(A,B)	CNPV*3621A**	58MV(B,C)080−14	33,200	11.0	13.5
4541334	CA13NA036****(A,B)	CNPV*3621A**	58MV(B,C)080−20	33,200	11.0	13.5
4541335	CA13NA036****(A,B)	CNPV*3621A**	58MV(B,C)100−20	33,400	11.0	13.5
4541340	CA13NA036****(A,B)	CNPV*3621A**	58PH*090−16	33,400	11.7	14.0
4541341	CA13NA036****(A,B)	CNPV*3621A**	58PH*110−20	33,600	11.7	14.0
4541336	CA13NA036****(A,B)	CNPV*3621A**	58UVB080−14	33,200	11.0	13.5
4541337	CA13NA036****(A,B)	CNPV*3621A**	58UVB080−20	33,200	11.0	13.5
4541338	CA13NA036****(A,B)	CNPV*3621A**	58UVB100−20	33,400	11.0	13.5
4541344	CA13NA036****(A,B)	CNPV*3621A**	58VLR120−20	33,200	11.5	14.0
4541343	CA13NA036****(A,B)	CNPV*3621A**	58VMR120−20	33,200	11.0	13.5
4742100	CA13NA036****(A,B)	CNPV*3621A**	59*N*A060V17**14	30,000	11.2	13.5
4742101	CA13NA036****(A,B)	CNPV*3621A**	59*N*A080V17**14	32,800	11.4	13.7
4742102	CA13NA036****(A,B)	CNPV*3621A**	59*N*A100V21**20	33,000	11.4	13.7
4742103	CA13NA036****(A,B)	CNPV*3621A**	59*P5A060E17**14	33,000	11.2	13.5
4742104	CA13NA036****(A,B)	CNPV*3621A**	59*P5A080E17**16	33,000	11.4	13.7
4660090	CA13NA036****(A,B)	CNPV*3621A**	OVLAAB036098	33,000	11.0	13.2
4541345	CA13NA036****(A,B)	CNPV*3621A**	OVLAAB048112	33,400	11.0	13.2
4660089	CA13NA036****(A,B)	CNPV*3621A**	OVMAAB036098	33,200	11.0	13.2
4660091	CA13NA036****(A,B)	CNPV*3621A**	OVMAAB042112	33,200	11.0	13.5
4541349	CA13NA036****(A,B)	CNPV*3717A**	58CV(A,X)090−16	34,400	12.0	14.5
4660092	CA13NA036****(A,B)	CNPV*3717A**	58HDV040−−12	34,400	11.0	13.2
4660093	CA13NA036****(A,B)	CNPV*3717A**	58HDV060−−12	34,600	11.5	13.5
4541352	CA13NA036****(A,B)	CNPV*3717A**	58ME(B,C)060−12	34,800	12.0	14.5
4541353	CA13NA036****(A,B)	CNPV*3717A**	58ME(B,C)080−12	34,800	12.0	14.5
4541354	CA13NA036****(A,B)	CNPV*3717A**	58ME(B,C)080−16	34,800	12.0	14.5
4541351	CA13NA036****(A,B)	CNPV*3717A**	58MEB040−12	34,800	12.0	14.5
4541347	CA13NA036****(A,B)	CNPV*3717A**	58MV(B,C)060−14	34,600	12.0	14.5
4541350	CA13NA036****(A,B)	CNPV*3717A**	58PH*070−16	34,600	11.5	14.0
4541348	CA13NA036****(A,B)	CNPV*3717A**	58UVB060−14	34,600	12.0	14.0
4541356	CA13NA036****(A,B)	CNPV*3717A**	58VLR105−12	34,600	11.7	14.0

See notes on page 39

AHRI COMBINATION RATINGS* CONTINUED

AHRI Ref. No.	Model Number	Indoor Model	Furnace Model	Capacity	EER	SEER
4541355	CA13NA036****(A,B)	CNPV*3717A**	58VMR105−12	34,200	11.7	14.0
4742105	CA13NA036****(A,B)	CNPV*3717A**	59*N*A060V17**14	33,800	11.5	14.0
4742106	CA13NA036****(A,B)	CNPV*3717A**	59*N*A080V17**14	34,000	11.8	14.2
4742107	CA13NA036****(A,B)	CNPV*3717A**	59*P5A060E17**14	34,200	11.5	14.0
4742108	CA13NA036****(A,B)	CNPV*3717A**	59*P5A080E17**16	34,400	11.8	14.2
4541358	CA13NA036****(A,B)	CNPV*3717A**	OVLAAB036098	34,200	11.5	13.5
4541357	CA13NA036****(A,B)	CNPV*3717A**	OVMAAB036098	34,400	11.5	13.5
4541359	CA13NA036****(A,B)	CNPV*3717A**	OVMAAB042112	34,600	11.5	14.0
4541346	CA13NA036****(A,B)	CNPV*3717A**+TDR		34,800	11.0	13.0
4541363	CA13NA036****(A,B)	CNPV*4217A**	58CV(A,X)090−16	33,800	11.7	14.0
4660094	CA13NA036****(A,B)	CNPV*4217A**	58HDV040−−12	33,600	11.0	13.2
4660095	CA13NA036****(A,B)	CNPV*4217A**	58HDV060−−12	34,000	11.0	13.2
4541366	CA13NA036****(A,B)	CNPV*4217A**	58ME(B,C)060−12	33,800	11.7	14.0
4541367	CA13NA036****(A,B)	CNPV*4217A**	58ME(B,C)080−12	33,800	11.7	14.0
4541368	CA13NA036****(A,B)	CNPV*4217A**	58ME(B,C)080−16	33,800	11.7	14.0
4541365	CA13NA036****(A,B)	CNPV*4217A**	58MEB040−12	33,800	11.7	14.0
4541361	CA13NA036****(A,B)	CNPV*4217A**	58MV(B,C)060−14	33,800	11.7	14.0
4541364	CA13NA036****(A,B)	CNPV*4217A**	58PH*070−16	33,800	11.0	13.5
4541362	CA13NA036****(A,B)	CNPV*4217A**	58UVB060−14	33,800	11.7	14.0
4541370	CA13NA036****(A,B)	CNPV*4217A**	58VLR105−12	34,000	11.5	13.5
4541369	CA13NA036****(A,B)	CNPV*4217A**	58VMR105−12	33,600	11.5	14.0
4742109	CA13NA036****(A,B)	CNPV*4217A**	59*N*A060V17**14	33,200	11.4	13.7
4742110	CA13NA036****(A,B)	CNPV*4217A**	59*N*A080V17**14	33,400	11.5	14.0
4742111	CA13NA036****(A,B)	CNPV*4217A**	59*P5A060E17**14	33,600	11.4	13.7
4742112	CA13NA036****(A,B)	CNPV*4217A**	59*P5A080E17**16	33,600	11.5	14.0
4541372	CA13NA036****(A,B)	CNPV*4217A**	OVLAAB036098	33,600	11.0	13.5
4541371	CA13NA036****(A,B)	CNPV*4217A**	OVMAAB036098	33,800	11.0	13.2
4541373	CA13NA036****(A,B)	CNPV*4217A**	OVMAAB042112	33,800	11.5	13.5
4541360	CA13NA036****(A,B)	CNPV*4217A**+TDR		33,800	11.0	13.0
4541381	CA13NA036****(A,B)	CNPV*4221A**	58CV(A,X)110−20	33,600	11.7	14.0
4660096	CA13NA036****(A,B)	CNPV*4221A**	58HDV040−−12	33,400	11.0	13.2
4660097	CA13NA036****(A,B)	CNPV*4221A**	58HDV060−−12	33,600	11.0	13.2
4660098	CA13NA036****(A,B)	CNPV*4221A**	58HDV080−−20	34,200	11.5	13.5
4541384	CA13NA036****(A,B)	CNPV*4221A**	58ME(B,C)100−20	33,800	11.7	14.0
4541375	CA13NA036****(A,B)	CNPV*4221A**	58MV(B,C)080−14	33,600	11.0	13.5
4541376	CA13NA036****(A,B)	CNPV*4221A**	58MV(B,C)080−20	33,600	11.7	14.0
4541377	CA13NA036****(A,B)	CNPV*4221A**	58MV(B,C)100−20	33,600	11.7	14.0
4541382	CA13NA036****(A,B)	CNPV*4221A**	58PH*090−16	33,800	11.9	14.0
4541383	CA13NA036****(A,B)	CNPV*4221A**	58PH*110−20	34,000	12.0	14.0
4541378	CA13NA036****(A,B)	CNPV*4221A**	58UVB080−14	33,600	11.5	13.5
4541379	CA13NA036****(A,B)	CNPV*4221A**	58UVB080−20	33,600	11.7	14.0
4541380	CA13NA036****(A,B)	CNPV*4221A**	58UVB100−20	33,600	11.7	14.0
4541386	CA13NA036****(A,B)	CNPV*4221A**	58VLR120−20	33,600	11.7	14.0
4541385	CA13NA036****(A,B)	CNPV*4221A**	58VMR120−20	33,600	11.7	14.0
4742113	CA13NA036****(A,B)	CNPV*4221A**	59*N*A060V17**14	33,000	11.4	13.7
4742114	CA13NA036****(A,B)	CNPV*4221A**	59*N*A080V17**14	33,200	11.4	13.7
4742115	CA13NA036****(A,B)	CNPV*4221A**	59*N*A100V21**20	33,200	11.5	14.0
4742116	CA13NA036****(A,B)	CNPV*4221A**	59*P5A060E17**14	33,400	11.4	13.7
4742117	CA13NA036****(A,B)	CNPV*4221A**	59*P5A080E17**16	33,400	11.4	13.7
4660100	CA13NA036****(A,B)	CNPV*4221A**	OVLAAB036098	33,400	11.0	13.2
4541387	CA13NA036****(A,B)	CNPV*4221A**	OVLAAB048112	33,800	11.0	13.5
4660099	CA13NA036****(A,B)	CNPV*4221A**	OVMAAB036098	33,400	11.0	13.2
4660101	CA13NA036****(A,B)	CNPV*4221A**	OVMAAB042112	33,600	11.5	13.5
4541374	CA13NA036****(A,B)	CNPV*4221A**+TDR		33,800	10.9	13.0
4541392	CA13NA036****(A,B)	CNPV*4324A**	58CV(A,X)135−22	34,600	12.0	14.5
4541393	CA13NA036****(A,B)	CNPV*4324A**	58CV(A,X)155−22	34,600	12.0	14.5
4660102	CA13NA036****(A,B)	CNPV*4324A**	58HDV080−−20	34,800	12.0	14.0
4541394	CA13NA036****(A,B)	CNPV*4324A**	58HDV100−−20	34,800	12.0	14.5
4541390	CA13NA036****(A,B)	CNPV*4324A**	58MV(B,C)120−20	34,600	12.0	14.5
4541389	CA13NA036****(A,B)	CNPV*4324A**	58MVB040−14	34,400	11.5	14.0
4541391	CA13NA036****(A,B)	CNPV*4324A**	58UVB120−20	34,600	12.0	14.5
4742118	CA13NA036****(A,B)	CNPV*4324A**	59*N*A100V21**20	34,200	12.0	14.5
4742119	CA13NA036****(A,B)	CNPV*4324A**	59*N*A120V24**22	34,200	12.0	14.5
4660103	CA13NA036****(A,B)	CNPV*4324A**	OVLAAB048112	34,800	12.0	14.0
4660104	CA13NA036****(A,B)	CNPV*4324A**	OVLAAB060154	34,800	12.0	14.5
4541388	CA13NA036****(A,B)	CNPV*4324A**+TDR		34,800	11.0	13.0
4541617	CA13NA036****(A,B)	CNPV*4821A**	58CV(A,X)110−20	34,000	11.7	14.0
4541620	CA13NA036****(A,B)	CNPV*4821A**	58ME(B,C)100−20	34,200	12.0	14.5
4541611	CA13NA036****(A,B)	CNPV*4821A**	58MV(B,C)080−14	34,000	11.7	14.0
4541612	CA13NA036****(A,B)	CNPV*4821A**	58MV(B,C)080−20	33,800	11.7	14.0
4541613	CA13NA036****(A,B)	CNPV*4821A**	58MV(B,C)100−20	34,000	11.7	14.0
4541618	CA13NA036****(A,B)	CNPV*4821A**	58PH*090−16	34,400	12.0	14.0
4541619	CA13NA036****(A,B)	CNPV*4821A**	58PH*110−20	34,400	12.0	14.0

See notes on page 39

AHRI COMBINATION RATINGS* CONTINUED

AHRI Ref. No.	Model Number	Indoor Model	Furnace Model	Capacity	EER	SEER
4541614	CA13NA036****(A,B)	CNPV*4821A**	58UVB080−14	34,000	11.7	14.0
4541615	CA13NA036****(A,B)	CNPV*4821A**	58UVB080−20	33,800	11.7	14.0
4541616	CA13NA036****(A,B)	CNPV*4821A**	58UVB100−20	34,000	11.7	14.0
4541622	CA13NA036****(A,B)	CNPV*4821A**	58VLR120−20	34,000	12.0	14.0
4541621	CA13NA036****(A,B)	CNPV*4821A**	58VMR120−20	33,800	11.7	14.0
4773524	CA13NA036****(A,B)	CNPV*4821A**	59*N*A100V21**20	33,800	11.8	14.2
4541623	CA13NA036****(A,B)	CNPV*4821A**	OVLAAB048112	34,200	11.5	13.7
4541610	CA13NA036****(A,B)	CNPV*4821A**+TDR		34,200	11.0	13.0
4541628	CA13NA036****(A,B)	CNPV*4824A**	58CV(A,X)135−22	34,000	12.0	14.0
4541629	CA13NA036****(A,B)	CNPV*4824A**	58CV(A,X)155−22	34,000	12.0	14.5
4541632	CA13NA036****(A,B)	CNPV*4824A**	58HDV100−−20	34,400	11.7	14.0
4541631	CA13NA036****(A,B)	CNPV*4824A**	58ME(B,C)120−20	34,800	12.0	14.0
4541626	CA13NA036****(A,B)	CNPV*4824A**	58MV(B,C)120−20	34,000	11.7	14.0
4541625	CA13NA036****(A,B)	CNPV*4824A**	58MVB040−14	33,800	11.7	14.0
4541630	CA13NA036****(A,B)	CNPV*4824A**	58PH*135−20	34,800	11.7	14.0
4541627	CA13NA036****(A,B)	CNPV*4824A**	58UVB120−20	34,000	11.7	14.0
4773525	CA13NA036****(A,B)	CNPV*4824A**	59*N*A100V21**20	33,800	11.8	14.2
4541624	CA13NA036****(A,B)	CNPV*4824A**+TDR		34,200	11.0	13.0
4541502	CA13NA036****(A,B)	CSPH*3612A**	58CV(A,X)070−12	33,600	11.7	14.0
4541503	CA13NA036****(A,B)	CSPH*3612A**	58CV(A,X)090−16	33,600	12.0	14.0
4541504	CA13NA036****(A,B)	CSPH*3612A**	58CV(A,X)110−20	33,600	12.0	14.0
4541505	CA13NA036****(A,B)	CSPH*3612A**	58CV(A,X)135−22	33,600	12.0	14.0
4541506	CA13NA036****(A,B)	CSPH*3612A**	58CV(A,X)155−22	33,600	12.0	14.0
4541516	CA13NA036****(A,B)	CSPH*3612A**	58HDV040−−12	33,800	11.0	13.2
4541517	CA13NA036****(A,B)	CSPH*3612A**	58HDV060−−12	34,000	11.0	13.5
4541518	CA13NA036****(A,B)	CSPH*3612A**	58HDV080−−20	34,000	11.5	14.0
4541519	CA13NA036****(A,B)	CSPH*3612A**	58HDV100−−20	34,000	11.5	14.0
4541512	CA13NA036****(A,B)	CSPH*3612A**	58ME(B,C)060−12	33,800	11.7	14.0
4541513	CA13NA036****(A,B)	CSPH*3612A**	58ME(B,C)080−12	33,800	11.7	14.0
4541514	CA13NA036****(A,B)	CSPH*3612A**	58ME(B,C)080−16	33,800	11.7	14.0
4541515	CA13NA036****(A,B)	CSPH*3612A**	58ME(B,C)100−20	33,800	11.7	14.0
4541511	CA13NA036****(A,B)	CSPH*3612A**	58MEB040−12	33,800	11.7	14.0
4541497	CA13NA036****(A,B)	CSPH*3612A**	58MV(B,C)060−14	33,600	11.5	14.0
4541498	CA13NA036****(A,B)	CSPH*3612A**	58MV(B,C)080−14	33,400	11.7	14.0
4541499	CA13NA036****(A,B)	CSPH*3612A**	58MV(B,C)080−20	33,600	11.7	14.0
4541500	CA13NA036****(A,B)	CSPH*3612A**	58MV(B,C)100−20	33,400	11.7	14.0
4541501	CA13NA036****(A,B)	CSPH*3612A**	58MV(B,C)120−20	33,600	12.0	14.0
4541496	CA13NA036****(A,B)	CSPH*3612A**	58MVB040−14	33,600	11.5	13.5
4541507	CA13NA036****(A,B)	CSPH*3612A**	58PH*045−08	33,800	11.0	13.2
4541508	CA13NA036****(A,B)	CSPH*3612A**	58PH*070−16	34,000	11.5	13.5
4541509	CA13NA036****(A,B)	CSPH*3612A**	58PH*090−16	34,200	12.0	14.0
4541510	CA13NA036****(A,B)	CSPH*3612A**	58PH*110−20	34,400	12.0	14.0
4541521	CA13NA036****(A,B)	CSPH*3612A**	58VLR105−12	34,200	11.7	14.0
4541523	CA13NA036****(A,B)	CSPH*3612A**	58VLR120−20	34,000	12.0	14.0
4541520	CA13NA036****(A,B)	CSPH*3612A**	58VMR105−12	33,800	11.7	14.0
4541522	CA13NA036****(A,B)	CSPH*3612A**	58VMR120−20	34,000	11.7	14.0
4742138	CA13NA036****(A,B)	CSPH*3612A**	59*N*A060V17**14	33,400	11.4	13.7
4742139	CA13NA036****(A,B)	CSPH*3612A**	59*N*A080V17**14	33,600	11.5	14.0
4742140	CA13NA036****(A,B)	CSPH*3612A**	59*N*A100V21**20	33,600	11.8	14.2
4742141	CA13NA036****(A,B)	CSPH*3612A**	59*N*A120V24**22	33,600	11.8	14.2
4742142	CA13NA036****(A,B)	CSPH*3612A**	59*P5A060E17**14	33,800	11.4	13.7
4742143	CA13NA036****(A,B)	CSPH*3612A**	59*P5A080E17**16	33,800	11.5	14.0
4541525	CA13NA036****(A,B)	CSPH*3612A**	OVLAAB036098	33,800	11.0	13.5
4541527	CA13NA036****(A,B)	CSPH*3612A**	OVLAAB048112	34,200	11.5	13.5
4541528	CA13NA036****(A,B)	CSPH*3612A**	OVLAAB060154	34,800	11.7	14.0
4541524	CA13NA036****(A,B)	CSPH*3612A**	OVMAAB036098	34,000	11.0	13.5
4541526	CA13NA036****(A,B)	CSPH*3612A**	OVMAAB042112	34,000	11.7	13.5
4541536	CA13NA036****(A,B)	CSPH*4212A**	58CV(A,X)070−12	33,600	11.7	14.0
4541537	CA13NA036****(A,B)	CSPH*4212A**	58CV(A,X)090−16	33,600	12.0	14.0
4541538	CA13NA036****(A,B)	CSPH*4212A**	58CV(A,X)110−20	33,800	12.0	14.0
4541539	CA13NA036****(A,B)	CSPH*4212A**	58CV(A,X)135−22	33,600	12.0	14.0
4541540	CA13NA036****(A,B)	CSPH*4212A**	58CV(A,X)155−22	33,600	12.0	14.0
4541550	CA13NA036****(A,B)	CSPH*4212A**	58HDV040−−12	34,000	11.0	13.5
4541551	CA13NA036****(A,B)	CSPH*4212A**	58HDV060−−12	34,400	11.0	13.5
4541552	CA13NA036****(A,B)	CSPH*4212A**	58HDV080−−20	34,400	11.5	14.0
4541553	CA13NA036****(A,B)	CSPH*4212A**	58HDV100−−20	34,400	11.5	14.0
4541546	CA13NA036****(A,B)	CSPH*4212A**	58ME(B,C)060−12	33,800	11.7	14.0
4541547	CA13NA036****(A,B)	CSPH*4212A**	58ME(B,C)080−12	33,800	11.7	14.0
4541548	CA13NA036****(A,B)	CSPH*4212A**	58ME(B,C)080−16	33,800	11.7	14.0
4541549	CA13NA036****(A,B)	CSPH*4212A**	58ME(B,C)100−20	33,800	11.7	14.0
4541545	CA13NA036****(A,B)	CSPH*4212A**	58MEB040−12	33,800	11.7	14.0
4541531	CA13NA036****(A,B)	CSPH*4212A**	58MV(B,C)060−14	33,800	12.0	14.0
4541532	CA13NA036****(A,B)	CSPH*4212A**	58MV(B,C)080−14	33,600	11.7	14.0

See notes on page 39

AHRI COMBINATION RATINGS* CONTINUED

AHRI Ref. No.	Model Number	Indoor Model	Furnace Model	Capacity	EER	SEER
4541533	CA13NA036****(A,B)	CSPH*4212A**	58MV(B,C)080−20	33,600	12.0	14.0
4541534	CA13NA036****(A,B)	CSPH*4212A**	58MV(B,C)100−20	33,800	12.0	14.0
4541535	CA13NA036****(A,B)	CSPH*4212A**	58MV(B,C)120−20	33,600	12.0	14.0
4541530	CA13NA036****(A,B)	CSPH*4212A**	58MVB040−14	33,600	11.7	14.0
4541541	CA13NA036****(A,B)	CSPH*4212A**	58PH*045−08	34,000	11.0	13.5
4541542	CA13NA036****(A,B)	CSPH*4212A**	58PH*070−16	34,200	11.7	14.0
4541543	CA13NA036****(A,B)	CSPH*4212A**	58PH*090−16	34,600	12.0	14.0
4541544	CA13NA036****(A,B)	CSPH*4212A**	58PH*110−20	34,600	12.0	14.0
4541555	CA13NA036****(A,B)	CSPH*4212A**	58VLR105−12	34,400	11.7	14.0
4541557	CA13NA036****(A,B)	CSPH*4212A**	58VLR120−20	34,200	12.0	14.5
4541554	CA13NA036****(A,B)	CSPH*4212A**	58VMR105−12	34,000	11.7	14.0
4541556	CA13NA036****(A,B)	CSPH*4212A**	58VMR120−20	34,200	11.7	14.0
4742144	CA13NA036****(A,B)	CSPH*4212A**	59*N*A060V17**14	33,600	11.5	14.0
4742145	CA13NA036****(A,B)	CSPH*4212A**	59*N*A080V17**14	33,800	11.8	14.2
4742146	CA13NA036****(A,B)	CSPH*4212A**	59*N*A100V21**20	33,800	11.8	14.2
4742147	CA13NA036****(A,B)	CSPH*4212A**	59*N*A120V24**22	33,800	12.0	14.5
4742148	CA13NA036****(A,B)	CSPH*4212A**	59*P5A060E17**14	34,000	11.5	14.0
4742149	CA13NA036****(A,B)	CSPH*4212A**	59*P5A080E17**16	34,000	11.5	14.0
4541559	CA13NA036****(A,B)	CSPH*4212A**	OVLAAB036098	34,000	11.5	13.5
4541561	CA13NA036****(A,B)	CSPH*4212A**	OVLAAB048112	34,400	11.7	13.5
4541562	CA13NA036****(A,B)	CSPH*4212A**	OVLAAB060154	34,800	12.0	14.0
4541558	CA13NA036****(A,B)	CSPH*4212A**	OVMAAB036098	34,200	11.6	13.5
4541560	CA13NA036****(A,B)	CSPH*4212A**	OVMAAB042112	34,200	11.7	14.0
4541529	CA13NA036****(A,B)	CSPH*4212A**+TDR		34,000	11.0	13.0
4541670	CA13NA036****(A,B)	CSPH*4812A**	58CV(A,X)070−12	34,000	11.7	14.0
4541671	CA13NA036****(A,B)	CSPH*4812A**	58CV(A,X)090−16	34,200	11.7	14.0
4541672	CA13NA036****(A,B)	CSPH*4812A**	58CV(A,X)110−20	34,200	11.7	14.0
4541673	CA13NA036****(A,B)	CSPH*4812A**	58CV(A,X)135−22	34,200	12.0	14.0
4541674	CA13NA036****(A,B)	CSPH*4812A**	58CV(A,X)155−22	34,200	12.0	14.5
4541685	CA13NA036****(A,B)	CSPH*4812A**	58HDV060−−12	34,400	11.3	13.7
4541686	CA13NA036****(A,B)	CSPH*4812A**	58HDV080−−20	34,800	11.7	14.0
4541687	CA13NA036****(A,B)	CSPH*4812A**	58HDV100−−20	34,600	11.7	14.0
4541680	CA13NA036****(A,B)	CSPH*4812A**	58ME(B,C)060−12	34,400	11.7	14.0
4541681	CA13NA036****(A,B)	CSPH*4812A**	58ME(B,C)080−12	34,400	11.7	14.0
4541682	CA13NA036****(A,B)	CSPH*4812A**	58ME(B,C)080−16	34,400	11.7	14.0
4541683	CA13NA036****(A,B)	CSPH*4812A**	58ME(B,C)100−20	34,400	12.0	14.5
4541684	CA13NA036****(A,B)	CSPH*4812A**	58ME(B,C)120−20	35,000	12.0	14.0
4541679	CA13NA036****(A,B)	CSPH*4812A**	58MEB040−12	34,400	11.7	14.0
4541665	CA13NA036****(A,B)	CSPH*4812A**	58MV(B,C)060−14	34,400	11.7	14.0
4541666	CA13NA036****(A,B)	CSPH*4812A**	58MV(B,C)080−14	34,200	11.7	14.0
4541667	CA13NA036****(A,B)	CSPH*4812A**	58MV(B,C)080−20	34,000	11.7	14.0
4541668	CA13NA036****(A,B)	CSPH*4812A**	58MV(B,C)100−20	34,200	11.7	14.0
4541669	CA13NA036****(A,B)	CSPH*4812A**	58MV(B,C)120−20	34,200	11.7	14.0
4541664	CA13NA036****(A,B)	CSPH*4812A**	58MVB040−14	34,000	11.7	14.0
4541675	CA13NA036****(A,B)	CSPH*4812A**	58PH*070−16	34,200	11.5	13.7
4541676	CA13NA036****(A,B)	CSPH*4812A**	58PH*090−16	34,400	12.0	14.0
4541677	CA13NA036****(A,B)	CSPH*4812A**	58PH*110−20	34,600	12.0	14.5
4541678	CA13NA036****(A,B)	CSPH*4812A**	58PH*135−20	34,800	11.7	14.0
4541689	CA13NA036****(A,B)	CSPH*4812A**	58VLR120−20	34,200	12.0	14.0
4541688	CA13NA036****(A,B)	CSPH*4812A**	58VMR120−20	34,000	11.7	14.0
4541691	CA13NA036****(A,B)	CSPH*4812A**	OVLAAB048112	34,400	11.5	13.7
4541692	CA13NA036****(A,B)	CSPH*4812A**	OVLAAB060154	35,000	11.7	14.0
4541690	CA13NA036****(A,B)	CSPH*4812A**	OVMAAB042112	34,200	11.7	14.0
4541663	CA13NA036****(A,B)	CSPH*4812A**+TDR		34,400	11.0	13.0
4541694	CA13NA036****(A,B)	FB4CNF036		32,600	11.0	13.0
4541693	CA13NA036****(A,B)	FB4CNF036+TXV		32,600	11.0	13.2
4541696	CA13NA036****(A,B)	FB4CNF042		34,000	11.5	13.5
4541695	CA13NA036****(A,B)	FB4CNF042+TXV		34,000	11.5	14.0
4541698	CA13NA036****(A,B)	FB4CNF048		34,600	11.5	13.5
4541697	CA13NA036****(A,B)	FB4CNF048+TXV		34,600	11.5	14.0
4541567	CA13NA036****(A,B)	FE4AN(B,F)003+UI		33,400	11.7	14.0
4541568	CA13NA036****(A,B)	FE4AN(B,F)005+UI		34,400	12.2	14.5
4541569	CA13NA036****(A,B)	FE4ANB006+UI		34,800	12.2	15.0
4541566	CA13NA036****(A,B)	FE4ANF002+UI		33,200	11.3	13.7
4541570	CA13NA036****(A,B)	FE5ANB004+UI		34,800	12.2	15.0
4541571	CA13NA036****(A,B)	FF1ENP037		33,200	11.0	13.0
4541573	CA13NA036****(A,B)	FV4CN(B,F)003		33,600	12.0	14.0
4541574	CA13NA036****(A,B)	FV4CN(B,F)005		34,600	12.0	14.0
4541575	CA13NA036****(A,B)	FV4CNB006		35,000	12.0	14.0
4541572	CA13NA036****(A,B)	FV4CNF002		33,400	11.5	13.5
4541563	CA13NA036****(A,B)	FX4DN(B,F)037		34,400	12.0	14.5
4541564	CA13NA036****(A,B)	FX4DN(B,F)043		34,400	12.0	14.5
4541565	CA13NA036****(A,B)	FX4DN(B,F)049		34,600	12.0	14.5

See notes on page 39

AHRI COMBINATION RATINGS* CONTINUED

AHRI Ref. No.	Model Number	Indoor Model	Furnace Model	Capacity	EER	SEER
4541700	CA13NA036****(A,B)	FY5BNF036		33,000	11.0	13.2
4541699	CA13NA036****(A,B)	FY5BNF036+TXV		33,000	11.0	13.3
4541702	CA13NA036****(A,B)	FY5BNF042		33,800	11.0	13.0
4541701	CA13NA036****(A,B)	FY5BNF042+TXV		33,800	11.0	13.5
4541703	CA13NA042****(A,B)	†CAP**4221A**+TDR		41,000	11.0	13.0
4541710	CA13NA042****(A,B)	CAP**4221A**	58CV(A,X)110−20	40,500	11.2	13.5
4541713	CA13NA042****(A,B)	CAP**4221A**	58ME(B,C)100−20	40,500	11.7	14.0
4541704	CA13NA042****(A,B)	CAP**4221A**	58MV(B,C)080−14	40,000	11.2	13.5
4541705	CA13NA042****(A,B)	CAP**4221A**	58MV(B,C)080−20	40,000	11.2	13.5
4541706	CA13NA042****(A,B)	CAP**4221A**	58MV(B,C)100−20	40,000	11.2	13.5
4541711	CA13NA042****(A,B)	CAP**4221A**	58PH*090−16	40,500	11.7	14.0
4541712	CA13NA042****(A,B)	CAP**4221A**	58PH*110−20	40,500	12.0	14.0
4541707	CA13NA042****(A,B)	CAP**4221A**	58UVB080−14	40,000	11.2	13.5
4541708	CA13NA042****(A,B)	CAP**4221A**	58UVB080−20	40,000	11.2	13.5
4541709	CA13NA042****(A,B)	CAP**4221A**	58UVB100−20	40,000	11.2	13.5
4541715	CA13NA042****(A,B)	CAP**4221A**	58VLR120−20	40,000	11.7	14.0
4541714	CA13NA042****(A,B)	CAP**4221A**	58VMR120−20	40,000	11.7	14.0
4742150	CA13NA042****(A,B)	CAP**4221A**	59*N*A060V17**14	39,500	11.2	13.5
4742151	CA13NA042****(A,B)	CAP**4221A**	59*N*A080V17**14	40,000	11.3	13.7
4742152	CA13NA042****(A,B)	CAP**4221A**	59*N*A100V21**20	40,000	11.5	13.7
4742153	CA13NA042****(A,B)	CAP**4221A**	59*P5A060E17**14	40,000	11.2	13.2
4742154	CA13NA042****(A,B)	CAP**4221A**	59*P5A080E17**16	40,000	11.3	13.5
4742155	CA13NA042****(A,B)	CAP**4221A**	59*P5A100E21**16	40,000	11.5	13.7
4541716	CA13NA042****(A,B)	CAP**4221A**	OVLAAB048112	40,500	11.0	13.2
4541721	CA13NA042****(A,B)	CAP**4224A**	58CV(A,X)135−22	40,500	11.5	14.0
4541722	CA13NA042****(A,B)	CAP**4224A**	58CV(A,X)155−22	40,500	11.5	14.0
4541725	CA13NA042****(A,B)	CAP**4224A**	58HDV100−−20	40,500	11.5	13.5
4541724	CA13NA042****(A,B)	CAP**4224A**	58ME(B,C)120−20	40,500	12.0	14.0
4541719	CA13NA042****(A,B)	CAP**4224A**	58MV(B,C)120−20	40,500	11.5	14.0
4541718	CA13NA042****(A,B)	CAP**4224A**	58MVB040−14	40,500	11.2	13.5
4541723	CA13NA042****(A,B)	CAP**4224A**	58PH*135−20	40,500	12.0	14.0
4541720	CA13NA042****(A,B)	CAP**4224A**	58UVB120−20	40,500	11.5	14.0
4742156	CA13NA042****(A,B)	CAP**4224A**	59*N*A100V21**20	40,000	11.5	13.7
4742157	CA13NA042****(A,B)	CAP**4224A**	59*N*A120V24**22	40,000	11.7	14.0
4742158	CA13NA042****(A,B)	CAP**4224A**	59*P5A100E21**16	40,000	11.5	13.7
4742159	CA13NA042****(A,B)	CAP**4224A**	59*P5A120E24**22	40,500	11.5	13.7
4541717	CA13NA042****(A,B)	CAP**4224A**+TDR		41,000	11.0	13.0
4541729	CA13NA042****(A,B)	CAP**4817A**	58CV(A,X)090−16	40,000	11.5	14.0
4541732	CA13NA042****(A,B)	CAP**4817A**	58ME(B,C)060−12	41,000	11.7	14.0
4541733	CA13NA042****(A,B)	CAP**4817A**	58ME(B,C)080−12	41,000	11.7	14.0
4541734	CA13NA042****(A,B)	CAP**4817A**	58ME(B,C)080−16	41,000	11.7	14.0
4541731	CA13NA042****(A,B)	CAP**4817A**	58MEB040−12	41,000	11.7	14.0
4541727	CA13NA042****(A,B)	CAP**4817A**	58MV(B,C)060−14	40,000	11.5	14.0
4541730	CA13NA042****(A,B)	CAP**4817A**	58PH*070−16	39,500	11.2	13.5
4541728	CA13NA042****(A,B)	CAP**4817A**	58UVB060−14	40,000	11.5	14.0
4742160	CA13NA042****(A,B)	CAP**4817A**	59*N*A060V17**14	40,500	11.3	13.5
4742161	CA13NA042****(A,B)	CAP**4817A**	59*N*A080V17**14	40,500	11.5	13.7
4742162	CA13NA042****(A,B)	CAP**4817A**	59*P5A060E17**14	41,000	11.3	13.5
4742163	CA13NA042****(A,B)	CAP**4817A**	59*P5A080E17**16	41,000	11.5	13.7
4541735	CA13NA042****(A,B)	CAP**4817A**	OVMAAB042112	41,000	11.5	13.5
4541726	CA13NA042****(A,B)	CAP**4817A**+TDR		40,500	11.0	13.2
4541743	CA13NA042****(A,B)	CAP**4821A**	58CV(A,X)110−20	41,000	11.5	14.0
4541746	CA13NA042****(A,B)	CAP**4821A**	58ME(B,C)100−20	41,000	12.0	14.0
4541737	CA13NA042****(A,B)	CAP**4821A**	58MV(B,C)080−14	40,500	11.2	13.5
4541738	CA13NA042****(A,B)	CAP**4821A**	58MV(B,C)080−20	40,500	11.5	13.5
4541739	CA13NA042****(A,B)	CAP**4821A**	58MV(B,C)100−20	40,500	11.5	13.5
4541744	CA13NA042****(A,B)	CAP**4821A**	58PH*090−16	41,000	12.0	14.0
4541745	CA13NA042****(A,B)	CAP**4821A**	58PH*110−20	41,000	12.0	14.0
4541740	CA13NA042****(A,B)	CAP**4821A**	58UVB080−14	40,500	11.2	13.5
4541741	CA13NA042****(A,B)	CAP**4821A**	58UVB080−20	40,500	11.2	13.5
4541742	CA13NA042****(A,B)	CAP**4821A**	58UVB100−20	40,500	11.2	13.5
4541748	CA13NA042****(A,B)	CAP**4821A**	58VLR120−20	41,000	11.7	14.0
4541747	CA13NA042****(A,B)	CAP**4821A**	58VMR120−20	40,500	11.7	14.0
4742164	CA13NA042****(A,B)	CAP**4821A**	59*N*A060V17**14	40,500	11.3	13.5
4742165	CA13NA042****(A,B)	CAP**4821A**	59*N*A080V17**14	40,500	11.5	13.7
4742166	CA13NA042****(A,B)	CAP**4821A**	59*N*A100V21**20	40,500	11.7	14.0
4742167	CA13NA042****(A,B)	CAP**4821A**	59*P5A060E17**14	40,500	11.3	13.5
4742168	CA13NA042****(A,B)	CAP**4821A**	59*P5A080E17**16	41,000	11.3	13.5
4742169	CA13NA042****(A,B)	CAP**4821A**	59*P5A100E21**16	40,500	11.5	13.7
4541749	CA13NA042****(A,B)	CAP**4821A**	OVLAAB048112	41,000	11.0	13.5
4541736	CA13NA042****(A,B)	CAP**4821A**+TDR		41,500	11.0	13.2
4541760	CA13NA042****(A,B)	CAP**4823A**	58HDV080−−20	41,500	11.5	14.0

See notes on page 39

AHRI COMBINATION RATINGS* CONTINUED

AHRI Ref. No.	Model Number	Indoor Model	Furnace Model	Capacity	EER	SEER
4742174	CA13NA042****(A,B)	CAP**4823A**	59*N*A100V21**20	40,500	11.8	14.2
4742175	CA13NA042****(A,B)	CAP**4823A**	59*N*A120V24**22	40,500	11.8	14.2
4742176	CA13NA042****(A,B)	CAP**4823A**	59*P5A100E21**16	40,500	11.5	14.0
4742177	CA13NA042****(A,B)	CAP**4823A**	59*P5A120E24**22	41,000	11.8	14.2
4541759	CA13NA042****(A,B)	CAP**4823A**+TDR		41,500	11.0	13.2
4541754	CA13NA042****(A,B)	CAP**4824A**	58CV(A,X)135–22	41,000	11.7	14.0
4541755	CA13NA042****(A,B)	CAP**4824A**	58CV(A,X)155–22	41,000	11.7	14.0
4541758	CA13NA042****(A,B)	CAP**4824A**	58HDV100––20	41,000	11.7	14.0
4541757	CA13NA042****(A,B)	CAP**4824A**	58ME(B,C)120–20	41,000	12.0	14.0
4541752	CA13NA042****(A,B)	CAP**4824A**	58MV(B,C)120–20	41,000	11.7	14.0
4541751	CA13NA042****(A,B)	CAP**4824A**	58MVB040–14	40,500	11.5	13.5
4541756	CA13NA042****(A,B)	CAP**4824A**	58PH*135–20	41,000	12.0	14.0
4541753	CA13NA042****(A,B)	CAP**4824A**	58UVB120–20	41,000	11.7	14.0
4742170	CA13NA042****(A,B)	CAP**4824A**	59*N*A100V21**20	40,500	11.7	14.0
4742171	CA13NA042****(A,B)	CAP**4824A**	59*N*A120V24**22	40,500	11.7	14.0
4742172	CA13NA042****(A,B)	CAP**4824A**	59*P5A100E21**16	41,000	11.5	13.7
4742173	CA13NA042****(A,B)	CAP**4824A**	59*P5A120E24**22	41,500	11.7	14.0
4541750	CA13NA042****(A,B)	CAP**4824A**+TDR		41,500	11.0	13.2
4640649	CA13NA042****(A,B)	CAP**6025A**	58HDV100––20	41,500	12.0	14.5
4640648	CA13NA042****(A,B)	CAP**6025A**+TDR		41,500	11.0	13.2
4541824	CA13NA042****(A,B)	CNPH*4221A**	58CV(A,X)070–12	40,500	11.2	13.5
4541825	CA13NA042****(A,B)	CNPH*4221A**	58CV(A,X)090–16	41,000	11.2	13.5
4541826	CA13NA042****(A,B)	CNPH*4221A**	58CV(A,X)110–20	41,000	11.2	13.5
4541827	CA13NA042****(A,B)	CNPH*4221A**	58CV(A,X)135–22	41,000	11.7	14.0
4541828	CA13NA042****(A,B)	CNPH*4221A**	58CV(A,X)155–22	41,000	11.7	14.0
4541839	CA13NA042****(A,B)	CNPH*4221A**	58HDV060––12	40,000	11.0	13.2
4541840	CA13NA042****(A,B)	CNPH*4221A**	58HDV080––20	40,500	11.5	13.5
4541841	CA13NA042****(A,B)	CNPH*4221A**	58HDV100––20	40,500	11.5	13.5
4541834	CA13NA042****(A,B)	CNPH*4221A**	58ME(B,C)060–12	40,500	11.5	13.5
4541835	CA13NA042****(A,B)	CNPH*4221A**	58ME(B,C)080–12	40,500	11.7	14.0
4541836	CA13NA042****(A,B)	CNPH*4221A**	58ME(B,C)080–16	40,000	11.7	14.0
4541837	CA13NA042****(A,B)	CNPH*4221A**	58ME(B,C)100–20	40,500	11.7	14.0
4541838	CA13NA042****(A,B)	CNPH*4221A**	58ME(B,C)120–20	40,500	11.7	14.0
4541833	CA13NA042****(A,B)	CNPH*4221A**	58MEB040–12	40,500	11.7	14.0
4640665	CA13NA042****(A,B)	CNPH*4221A**	58MEC060–12	40,500	11.5	13.5
4640666	CA13NA042****(A,B)	CNPH*4221A**	58MEC080–12	41,000	11.7	14.0
4640667	CA13NA042****(A,B)	CNPH*4221A**	58MEC080–16	40,500	11.7	14.0
4541819	CA13NA042****(A,B)	CNPH*4221A**	58MV(B,C)060–14	41,000	11.2	13.5
4541820	CA13NA042****(A,B)	CNPH*4221A**	58MV(B,C)080–14	40,500	11.2	13.5
4541821	CA13NA042****(A,B)	CNPH*4221A**	58MV(B,C)080–20	41,000	11.2	13.5
4541822	CA13NA042****(A,B)	CNPH*4221A**	58MV(B,C)100–20	40,500	11.2	13.5
4541823	CA13NA042****(A,B)	CNPH*4221A**	58MV(B,C)120–20	41,000	11.5	13.5
4541818	CA13NA042****(A,B)	CNPH*4221A**	58MVB040–14	40,500	11.2	13.5
4541829	CA13NA042****(A,B)	CNPH*4221A**	58PH*070–16	40,000	11.2	13.2
4541830	CA13NA042****(A,B)	CNPH*4221A**	58PH*090–16	40,500	11.7	14.0
4541831	CA13NA042****(A,B)	CNPH*4221A**	58PH*110–20	40,500	12.0	14.0
4541832	CA13NA042****(A,B)	CNPH*4221A**	58PH*135–20	40,500	11.7	14.0
4541843	CA13NA042****(A,B)	CNPH*4221A**	58VLR120–20	40,000	11.7	14.0
4541842	CA13NA042****(A,B)	CNPH*4221A**	58VMR120–20	40,000	11.5	13.5
4742202	CA13NA042****(A,B)	CNPH*4221A**	59*N*A060V17**14	39,500	11.2	13.5
4742203	CA13NA042****(A,B)	CNPH*4221A**	59*N*A080V17**14	40,000	11.4	13.7
4742204	CA13NA042****(A,B)	CNPH*4221A**	59*N*A100V21**20	40,000	11.5	14.0
4742205	CA13NA042****(A,B)	CNPH*4221A**	59*N*A120V24**22	40,000	11.8	14.2
4742206	CA13NA042****(A,B)	CNPH*4221A**	59*P5A060E17**14	40,000	11.2	13.5
4742207	CA13NA042****(A,B)	CNPH*4221A**	59*P5A080E17**16	40,000	11.2	13.5
4742208	CA13NA042****(A,B)	CNPH*4221A**	59*P5A100E21**16	40,000	11.4	13.7
4742209	CA13NA042****(A,B)	CNPH*4221A**	59*P5A120E24**22	40,500	11.5	14.0
4541845	CA13NA042****(A,B)	CNPH*4221A**	OVLAAB048112	40,500	11.0	13.2
4541846	CA13NA042****(A,B)	CNPH*4221A**	OVLAAB060154	41,000	11.2	13.5
4541844	CA13NA042****(A,B)	CNPH*4221A**	OVMAAB042112	40,000	11.2	13.5
4541817	CA13NA042****(A,B)	CNPH*4221A**+TDR		41,000	11.0	13.0
4541854	CA13NA042****(A,B)	CNPH*4321A**	58CV(A,X)070–12	41,500	11.5	14.0
4541855	CA13NA042****(A,B)	CNPH*4321A**	58CV(A,X)090–16	41,500	12.2	14.5
4541856	CA13NA042****(A,B)	CNPH*4321A**	58CV(A,X)110–20	41,500	12.0	14.5
4541857	CA13NA042****(A,B)	CNPH*4321A**	58CV(A,X)135–22	41,500	12.0	14.5
4541858	CA13NA042****(A,B)	CNPH*4321A**	58CV(A,X)155–22	41,500	12.0	14.5
4541869	CA13NA042****(A,B)	CNPH*4321A**	58HDV060––12	41,500	11.0	13.5
4541870	CA13NA042****(A,B)	CNPH*4321A**	58HDV080––20	41,500	11.5	14.0
4541871	CA13NA042****(A,B)	CNPH*4321A**	58HDV100––20	41,500	11.5	14.0
4541864	CA13NA042****(A,B)	CNPH*4321A**	58ME(B,C)060–12	41,500	11.5	14.0
4541865	CA13NA042****(A,B)	CNPH*4321A**	58ME(B,C)080–12	41,500	11.5	14.0
4541866	CA13NA042****(A,B)	CNPH*4321A**	58ME(B,C)080–16	41,500	12.0	14.5
4541867	CA13NA042****(A,B)	CNPH*4321A**	58ME(B,C)100–20	42,000	12.0	14.5

See notes on page 39

AHRI COMBINATION RATINGS* CONTINUED

AHRI Ref. No.	Model Number	Indoor Model	Furnace Model	Capacity	EER	SEER
4541868	CA13NA042****(A,B)	CNPH*4321A**	58ME(B,C)120−20	42,000	12.0	14.5
4541863	CA13NA042****(A,B)	CNPH*4321A**	58MEB040−12	41,500	11.5	14.0
4640668	CA13NA042****(A,B)	CNPH*4321A**	58MEC060−12	41,500	11.5	14.0
4640669	CA13NA042****(A,B)	CNPH*4321A**	58MEC080−16	41,500	12.0	14.5
4640670	CA13NA042****(A,B)	CNPH*4321A**	58MEC100−20	41,500	12.0	14.5
4640671	CA13NA042****(A,B)	CNPH*4321A**	58MEC120−20	41,500	12.0	14.5
4541849	CA13NA042****(A,B)	CNPH*4321A**	58MV(B,C)060−14	41,500	11.5	14.0
4541850	CA13NA042****(A,B)	CNPH*4321A**	58MV(B,C)080−14	41,500	11.5	14.0
4541851	CA13NA042****(A,B)	CNPH*4321A**	58MV(B,C)080−20	41,500	11.5	14.0
4541852	CA13NA042****(A,B)	CNPH*4321A**	58MV(B,C)100−20	41,500	11.5	14.0
4541853	CA13NA042****(A,B)	CNPH*4321A**	58MV(B,C)120−20	41,500	11.5	14.0
4541848	CA13NA042****(A,B)	CNPH*4321A**	58MVB040−14	41,500	11.5	14.0
4541859	CA13NA042****(A,B)	CNPH*4321A**	58PH*070−16	41,500	11.0	13.5
4541860	CA13NA042****(A,B)	CNPH*4321A**	58PH*090−16	41,500	12.0	14.5
4541861	CA13NA042****(A,B)	CNPH*4321A**	58PH*110−20	41,500	12.0	14.5
4541862	CA13NA042****(A,B)	CNPH*4321A**	58PH*135−20	41,500	12.0	14.5
4541873	CA13NA042****(A,B)	CNPH*4321A**	58VLR120−20	41,500	12.0	14.5
4541872	CA13NA042****(A,B)	CNPH*4321A**	58VMR120−20	41,500	12.0	14.0
4742210	CA13NA042****(A,B)	CNPH*4321A**	59*N*A060V17**14	41,000	11.5	14.0
4742211	CA13NA042****(A,B)	CNPH*4321A**	59*N*A080V17**14	41,000	11.8	14.2
4742212	CA13NA042****(A,B)	CNPH*4321A**	59*N*A100V21**20	41,000	11.8	14.2
4742213	CA13NA042****(A,B)	CNPH*4321A**	59*N*A120V24**22	41,000	12.0	14.5
4742214	CA13NA042****(A,B)	CNPH*4321A**	59*P5A060E17**14	41,500	11.5	14.0
4742215	CA13NA042****(A,B)	CNPH*4321A**	59*P5A080E17**16	41,500	11.5	14.0
4742216	CA13NA042****(A,B)	CNPH*4321A**	59*P5A100E21**16	41,500	11.8	14.2
4742217	CA13NA042****(A,B)	CNPH*4321A**	59*P5A120E24**22	42,000	12.0	14.5
4541875	CA13NA042****(A,B)	CNPH*4321A**	OVLAAB048112	41,500	11.5	13.5
4541876	CA13NA042****(A,B)	CNPH*4321A**	OVLAAB060154	42,500	11.7	14.0
4541874	CA13NA042****(A,B)	CNPH*4321A**	OVMAAB042112	41,500	11.7	14.0
4541847	CA13NA042****(A,B)	CNPH*4321A**+TDR		41,500	11.0	13.0
4541884	CA13NA042****(A,B)	CNPH*4821A**	58CV(A,X)070−12	41,000	11.2	13.5
4541885	CA13NA042****(A,B)	CNPH*4821A**	58CV(A,X)090−16	41,000	11.7	14.0
4541886	CA13NA042****(A,B)	CNPH*4821A**	58CV(A,X)110−20	41,000	11.7	14.0
4541887	CA13NA042****(A,B)	CNPH*4821A**	58CV(A,X)135−22	41,000	11.7	14.0
4541888	CA13NA042****(A,B)	CNPH*4821A**	58CV(A,X)155−22	41,000	11.7	14.0
4541899	CA13NA042****(A,B)	CNPH*4821A**	58HDV060−−12	41,000	11.2	13.2
4541900	CA13NA042****(A,B)	CNPH*4821A**	58HDV080−−20	41,500	11.7	13.5
4541901	CA13NA042****(A,B)	CNPH*4821A**	58HDV100−−20	41,500	11.7	14.0
4541894	CA13NA042****(A,B)	CNPH*4821A**	58ME(B,C)060−12	41,000	11.7	14.0
4541895	CA13NA042****(A,B)	CNPH*4821A**	58ME(B,C)080−12	41,000	11.7	14.0
4541896	CA13NA042****(A,B)	CNPH*4821A**	58ME(B,C)080−16	41,000	11.7	14.0
4541897	CA13NA042****(A,B)	CNPH*4821A**	58ME(B,C)100−20	41,000	12.0	14.0
4541898	CA13NA042****(A,B)	CNPH*4821A**	58ME(B,C)120−20	41,000	12.0	14.0
4541893	CA13NA042****(A,B)	CNPH*4821A**	58MEB040−12	41,000	11.7	14.0
4541879	CA13NA042****(A,B)	CNPH*4821A**	58MV(B,C)060−14	41,500	11.7	14.0
4541880	CA13NA042****(A,B)	CNPH*4821A**	58MV(B,C)080−14	41,500	11.7	14.0
4541881	CA13NA042****(A,B)	CNPH*4821A**	58MV(B,C)080−20	41,500	11.7	14.0
4541882	CA13NA042****(A,B)	CNPH*4821A**	58MV(B,C)100−20	41,500	11.7	14.0
4541883	CA13NA042****(A,B)	CNPH*4821A**	58MV(B,C)120−20	41,500	11.7	14.0
4541878	CA13NA042****(A,B)	CNPH*4821A**	58MVB040−14	41,000	11.5	13.5
4541889	CA13NA042****(A,B)	CNPH*4821A**	58PH*070−16	41,000	11.2	13.5
4541890	CA13NA042****(A,B)	CNPH*4821A**	58PH*090−16	41,000	12.0	14.0
4541891	CA13NA042****(A,B)	CNPH*4821A**	58PH*110−20	41,000	12.0	14.0
4541892	CA13NA042****(A,B)	CNPH*4821A**	58PH*135−20	41,000	12.0	14.0
4541903	CA13NA042****(A,B)	CNPH*4821A**	58VLR120−20	41,000	12.0	14.0
4541902	CA13NA042****(A,B)	CNPH*4821A**	58VMR120−20	41,000	11.7	14.0
4742218	CA13NA042****(A,B)	CNPH*4821A**	59*N*A060V17**14	40,500	11.4	13.7
4742219	CA13NA042****(A,B)	CNPH*4821A**	59*N*A080V17**14	40,500	11.5	14.0
4742220	CA13NA042****(A,B)	CNPH*4821A**	59*N*A100V21**20	40,500	11.8	14.2
4742221	CA13NA042****(A,B)	CNPH*4821A**	59*N*A120V24**22	40,500	12.0	14.5
4742222	CA13NA042****(A,B)	CNPH*4821A**	59*P5A060E17**14	41,000	11.4	13.7
4742223	CA13NA042****(A,B)	CNPH*4821A**	59*P5A080E17**16	41,000	11.4	13.7
4742224	CA13NA042****(A,B)	CNPH*4821A**	59*P5A100E21**16	41,000	11.8	14.2
4742225	CA13NA042****(A,B)	CNPH*4821A**	59*P5A120E24**22	41,500	11.8	14.2
4541905	CA13NA042****(A,B)	CNPH*4821A**	OVLAAB048112	41,000	11.5	13.5
4541906	CA13NA042****(A,B)	CNPH*4821A**	OVLAAB060154	42,000	11.7	14.0
4541904	CA13NA042****(A,B)	CNPH*4821A**	OVMAAB042112	41,000	11.5	13.5
4541877	CA13NA042****(A,B)	CNPH*4821A**+TDR		41,500	11.0	13.2
4541764	CA13NA042****(A,B)	CNPV*4217A**	58CV(A,X)090−16	40,500	11.7	14.0
4640651	CA13NA042****(A,B)	CNPV*4217A**	58HDV060−−12	40,500	11.0	13.2
4541767	CA13NA042****(A,B)	CNPV*4217A**	58ME(B,C)060−12	41,000	11.7	14.0
4541768	CA13NA042****(A,B)	CNPV*4217A**	58ME(B,C)080−12	41,000	11.7	14.0
4541769	CA13NA042****(A,B)	CNPV*4217A**	58ME(B,C)080−16	40,500	11.7	14.0

See notes on page 39

AHRI COMBINATION RATINGS* CONTINUED

AHRI Ref. No.	Model Number	Indoor Model	Furnace Model	Capacity	EER	SEER
4541766	CA13NA042****(A,B)	CNPV*4217A**	58MEB040−12	41,000	11.7	14.0
4640650	CA13NA042****(A,B)	CNPV*4217A**	58MEC060−12	41,000	11.7	14.0
4541762	CA13NA042****(A,B)	CNPV*4217A**	58MV(B,C)060−14	40,500	11.5	13.5
4541765	CA13NA042****(A,B)	CNPV*4217A**	58PH*070−16	40,500	11.2	13.5
4541763	CA13NA042****(A,B)	CNPV*4217A**	58UVB060−14	40,500	11.5	13.5
4742178	CA13NA042****(A,B)	CNPV*4217A**	59*N*A060V17**14	40,000	11.4	13.7
4742179	CA13NA042****(A,B)	CNPV*4217A**	59*N*A080V17**14	40,000	11.4	13.7
4742180	CA13NA042****(A,B)	CNPV*4217A**	59*P5A060E17**14	40,500	11.4	13.7
4742181	CA13NA042****(A,B)	CNPV*4217A**	59*P5A080E17**16	40,500	11.4	13.7
4541770	CA13NA042****(A,B)	CNPV*4217A**	OVMAAB042112	40,500	11.2	13.5
4541761	CA13NA042****(A,B)	CNPV*4217A**+TDR		41,000	11.0	13.0
4541778	CA13NA042****(A,B)	CNPV*4221A**	58CV(A,X)110−20	40,500	11.5	14.0
4640652	CA13NA042****(A,B)	CNPV*4221A**	58HDV060−−12	40,000	11.0	13.2
4640653	CA13NA042****(A,B)	CNPV*4221A**	58HDV080−−20	40,500	11.2	13.5
4541781	CA13NA042****(A,B)	CNPV*4221A**	58ME(B,C)100−20	40,500	11.7	14.0
4541772	CA13NA042****(A,B)	CNPV*4221A**	58MV(B,C)080−14	40,000	11.2	13.5
4541773	CA13NA042****(A,B)	CNPV*4221A**	58MV(B,C)080−20	40,500	11.2	13.5
4541774	CA13NA042****(A,B)	CNPV*4221A**	58MV(B,C)100−20	40,500	11.2	13.5
4541779	CA13NA042****(A,B)	CNPV*4221A**	58PH*090−16	40,500	11.7	14.0
4541780	CA13NA042****(A,B)	CNPV*4221A**	58PH*110−20	40,500	12.0	14.0
4541775	CA13NA042****(A,B)	CNPV*4221A**	58UVB080−14	40,000	11.2	13.5
4541776	CA13NA042****(A,B)	CNPV*4221A**	58UVB080−20	40,000	11.2	13.5
4541777	CA13NA042****(A,B)	CNPV*4221A**	58UVB100−20	40,000	11.2	13.5
4541783	CA13NA042****(A,B)	CNPV*4221A**	58VLR120−20	40,000	11.7	14.0
4541782	CA13NA042****(A,B)	CNPV*4221A**	58VMR120−20	40,000	11.5	13.5
4742182	CA13NA042****(A,B)	CNPV*4221A**	59*N*A060V17**14	39,500	11.2	13.5
4742183	CA13NA042****(A,B)	CNPV*4221A**	59*N*A080V17**14	40,000	11.4	13.7
4742184	CA13NA042****(A,B)	CNPV*4221A**	59*N*A100V21**20	40,000	11.5	14.0
4742185	CA13NA042****(A,B)	CNPV*4221A**	59*P5A060E17**14	40,000	11.2	13.5
4742186	CA13NA042****(A,B)	CNPV*4221A**	59*P5A080E17**16	40,000	11.2	13.5
4742187	CA13NA042****(A,B)	CNPV*4221A**	59*P5A100E21**16	40,000	11.4	13.7
4541784	CA13NA042****(A,B)	CNPV*4221A**	OVLAAB048112	40,500	11.0	13.2
4640654	CA13NA042****(A,B)	CNPV*4221A**	OVMAAB042112	40,000	11.2	13.5
4541771	CA13NA042****(A,B)	CNPV*4221A**+TDR		41,000	11.0	13.0
4541789	CA13NA042****(A,B)	CNPV*4324A**	58CV(A,X)135−22	41,500	12.0	14.5
4541790	CA13NA042****(A,B)	CNPV*4324A**	58CV(A,X)155−22	42,000	12.0	14.5
4640656	CA13NA042****(A,B)	CNPV*4324A**	58HDV080−−20	42,000	11.7	14.0
4541793	CA13NA042****(A,B)	CNPV*4324A**	58HDV100−−20	42,000	12.0	14.0
4541792	CA13NA042****(A,B)	CNPV*4324A**	58ME(B,C)120−20	42,500	12.0	14.5
4640655	CA13NA042****(A,B)	CNPV*4324A**	58MEC120−20	41,500	12.0	14.5
4541787	CA13NA042****(A,B)	CNPV*4324A**	58MV(B,C)120−20	41,500	12.0	14.5
4541786	CA13NA042****(A,B)	CNPV*4324A**	58MVB040−14	41,500	11.5	14.0
4541791	CA13NA042****(A,B)	CNPV*4324A**	58PH*135−20	42,500	12.0	14.5
4541788	CA13NA042****(A,B)	CNPV*4324A**	58UVB120−20	41,500	12.0	14.5
4742188	CA13NA042****(A,B)	CNPV*4324A**	59*N*A100V21**20	41,000	12.0	14.5
4742189	CA13NA042****(A,B)	CNPV*4324A**	59*N*A120V24**22	41,500	12.0	14.5
4742190	CA13NA042****(A,B)	CNPV*4324A**	59*P5A100E21**16	41,500	11.8	14.2
4742191	CA13NA042****(A,B)	CNPV*4324A**	59*P5A120E24**22	42,000	12.0	14.5
4640657	CA13NA042****(A,B)	CNPV*4324A**	OVLAAB048112	42,000	11.5	13.5
4640658	CA13NA042****(A,B)	CNPV*4324A**	OVLAAB060154	42,500	12.0	14.0
4541785	CA13NA042****(A,B)	CNPV*4324A**+TDR		41,500	11.0	13.0
4541801	CA13NA042****(A,B)	CNPV*4821A**	58CV(A,X)110−20	41,000	11.5	14.0
4640659	CA13NA042****(A,B)	CNPV*4821A**	58HDV060−−12	41,000	11.2	13.5
4640660	CA13NA042****(A,B)	CNPV*4821A**	58HDV080−−20	41,500	11.7	13.5
4541804	CA13NA042****(A,B)	CNPV*4821A**	58ME(B,C)100−20	41,000	12.0	14.0
4541795	CA13NA042****(A,B)	CNPV*4821A**	58MV(B,C)080−14	40,500	11.2	13.5
4541796	CA13NA042****(A,B)	CNPV*4821A**	58MV(B,C)080−20	40,500	11.2	13.5
4541797	CA13NA042****(A,B)	CNPV*4821A**	58MV(B,C)100−20	41,000	11.5	14.0
4541802	CA13NA042****(A,B)	CNPV*4821A**	58PH*090−16	41,000	12.0	14.0
4541803	CA13NA042****(A,B)	CNPV*4821A**	58PH*110−20	41,000	12.0	14.0
4541798	CA13NA042****(A,B)	CNPV*4821A**	58UVB080−14	40,500	11.2	13.5
4541799	CA13NA042****(A,B)	CNPV*4821A**	58UVB080−20	41,000	11.5	14.0
4541800	CA13NA042****(A,B)	CNPV*4821A**	58UVB100−20	42,000	11.5	14.0
4541806	CA13NA042****(A,B)	CNPV*4821A**	58VLR120−20	41,000	12.0	14.0
4541805	CA13NA042****(A,B)	CNPV*4821A**	58VMR120−20	41,000	11.7	14.0
4742192	CA13NA042****(A,B)	CNPV*4821A**	59*N*A060V17**14	40,500	11.4	13.7
4742193	CA13NA042****(A,B)	CNPV*4821A**	59*N*A080V17**14	40,500	11.5	14.0
4742194	CA13NA042****(A,B)	CNPV*4821A**	59*N*A100V21**20	40,500	11.8	14.2
4742195	CA13NA042****(A,B)	CNPV*4821A**	59*P5A060E17**14	41,000	11.4	13.7
4742196	CA13NA042****(A,B)	CNPV*4821A**	59*P5A080E17**16	41,000	11.4	13.7
4742197	CA13NA042****(A,B)	CNPV*4821A**	59*P5A100E21**16	41,000	11.8	14.2
4541807	CA13NA042****(A,B)	CNPV*4821A**	OVLAAB048112	41,000	11.5	13.5
4640661	CA13NA042****(A,B)	CNPV*4821A**	OVMAAB042112	41,000	11.5	13.5

See notes on page 39

AHRI COMBINATION RATINGS* CONTINUED

AHRI Ref. No.	Model Number	Indoor Model	Furnace Model	Capacity	EER	SEER
4541794	CA13NA042****(A,B)	CNPV*4821A**+TDR		41,500	11.0	13.2
4541812	CA13NA042****(A,B)	CNPV*4824A**	58CV(A,X)135−22	41,000	11.7	14.0
4541813	CA13NA042****(A,B)	CNPV*4824A**	58CV(A,X)155−22	41,000	11.7	14.0
4640662	CA13NA042****(A,B)	CNPV*4824A**	58HDV080−−20	41,500	11.7	13.5
4541816	CA13NA042****(A,B)	CNPV*4824A**	58HDV100−−20	41,500	11.7	14.0
4541815	CA13NA042****(A,B)	CNPV*4824A**	58ME(B,C)120−20	41,000	12.0	14.0
4541810	CA13NA042****(A,B)	CNPV*4824A**	58MV(B,C)120−20	41,000	11.7	14.0
4541809	CA13NA042****(A,B)	CNPV*4824A**	58MVB040−14	41,000	11.5	13.5
4541814	CA13NA042****(A,B)	CNPV*4824A**	58PH*135−20	41,000	12.0	14.0
4541811	CA13NA042****(A,B)	CNPV*4824A**	58UVB120−20	41,000	11.7	14.0
4742198	CA13NA042****(A,B)	CNPV*4824A**	59*N*A100V21**20	40,500	11.8	14.2
4742199	CA13NA042****(A,B)	CNPV*4824A**	59*N*A120V24**22	40,500	12.0	14.5
4742200	CA13NA042****(A,B)	CNPV*4824A**	59*P5A100E21**16	41,000	11.8	14.2
4742201	CA13NA042****(A,B)	CNPV*4824A**	59*P5A120E24**22	41,500	11.8	14.2
4640663	CA13NA042****(A,B)	CNPV*4824A**	OVLAAB048112	41,000	11.5	13.5
4640664	CA13NA042****(A,B)	CNPV*4824A**	OVLAAB060154	42,000	11.7	14.0
4541808	CA13NA042****(A,B)	CNPV*4824A**+TDR		41,500	11.0	13.2
4541914	CA13NA042****(A,B)	CSPH*4212A**	58CV(A,X)070−12	40,500	11.2	13.5
4541915	CA13NA042****(A,B)	CSPH*4212A**	58CV(A,X)090−16	41,000	11.7	14.0
4541916	CA13NA042****(A,B)	CSPH*4212A**	58CV(A,X)110−20	41,000	11.7	14.0
4541917	CA13NA042****(A,B)	CSPH*4212A**	58CV(A,X)135−22	41,000	12.0	14.5
4541918	CA13NA042****(A,B)	CSPH*4212A**	58CV(A,X)155−22	41,000	12.0	14.5
4541929	CA13NA042****(A,B)	CSPH*4212A**	58HDV060−−12	41,500	11.0	13.5
4541930	CA13NA042****(A,B)	CSPH*4212A**	58HDV080−−20	41,500	11.5	14.0
4541931	CA13NA042****(A,B)	CSPH*4212A**	58HDV100−−20	41,500	11.5	14.0
4541924	CA13NA042****(A,B)	CSPH*4212A**	58ME(B,C)060−12	41,000	11.7	14.0
4541925	CA13NA042****(A,B)	CSPH*4212A**	58ME(B,C)080−12	41,000	11.7	14.0
4541926	CA13NA042****(A,B)	CSPH*4212A**	58ME(B,C)080−16	41,000	11.7	14.0
4541927	CA13NA042****(A,B)	CSPH*4212A**	58ME(B,C)100−20	41,000	12.0	14.0
4541928	CA13NA042****(A,B)	CSPH*4212A**	58ME(B,C)120−20	41,000	12.0	14.0
4541923	CA13NA042****(A,B)	CSPH*4212A**	58MEB040−12	41,000	11.7	14.0
4541909	CA13NA042****(A,B)	CSPH*4212A**	58MV(B,C)060−14	41,500	11.5	13.5
4541910	CA13NA042****(A,B)	CSPH*4212A**	58MV(B,C)080−14	41,500	11.5	13.5
4541911	CA13NA042****(A,B)	CSPH*4212A**	58MV(B,C)080−20	41,500	11.5	13.5
4541912	CA13NA042****(A,B)	CSPH*4212A**	58MV(B,C)100−20	41,500	11.7	14.0
4541913	CA13NA042****(A,B)	CSPH*4212A**	58MV(B,C)120−20	41,500	11.7	14.0
4541908	CA13NA042****(A,B)	CSPH*4212A**	58MVB040−14	41,000	11.5	13.5
4541919	CA13NA042****(A,B)	CSPH*4212A**	58PH*070−16	40,500	11.5	13.5
4541920	CA13NA042****(A,B)	CSPH*4212A**	58PH*090−16	40,500	11.7	14.0
4541921	CA13NA042****(A,B)	CSPH*4212A**	58PH*110−20	40,500	12.0	14.0
4541922	CA13NA042****(A,B)	CSPH*4212A**	58PH*135−20	40,500	12.0	14.0
4541933	CA13NA042****(A,B)	CSPH*4212A**	58VLR120−20	41,000	11.7	14.0
4541932	CA13NA042****(A,B)	CSPH*4212A**	58VMR120−20	41,000	11.7	14.0
4742226	CA13NA042****(A,B)	CSPH*4212A**	59*N*A060V17**14	40,500	11.4	13.7
4742227	CA13NA042****(A,B)	CSPH*4212A**	59*N*A080V17**14	40,500	11.5	14.0
4742228	CA13NA042****(A,B)	CSPH*4212A**	59*N*A100V21**20	41,000	11.8	14.2
4742229	CA13NA042****(A,B)	CSPH*4212A**	59*N*A120V24**22	41,000	12.0	14.5
4742230	CA13NA042****(A,B)	CSPH*4212A**	59*P5A060E17**14	41,000	11.4	13.7
4742231	CA13NA042****(A,B)	CSPH*4212A**	59*P5A080E17**16	41,000	11.4	13.7
4742232	CA13NA042****(A,B)	CSPH*4212A**	59*P5A100E21**16	41,000	11.5	14.0
4742233	CA13NA042****(A,B)	CSPH*4212A**	59*P5A120E24**22	41,500	11.8	14.2
4541935	CA13NA042****(A,B)	CSPH*4212A**	OVLAAB048112	41,500	11.2	13.5
4541936	CA13NA042****(A,B)	CSPH*4212A**	OVLAAB060154	42,000	11.7	13.5
4541934	CA13NA042****(A,B)	CSPH*4212A**	OVMAAB042112	41,000	11.5	13.5
4541907	CA13NA042****(A,B)	CSPH*4212A**+TDR		41,000	11.0	13.2
4541944	CA13NA042****(A,B)	CSPH*4812A**	58CV(A,X)070−12	41,000	11.2	13.5
4541945	CA13NA042****(A,B)	CSPH*4812A**	58CV(A,X)090−16	42,500	11.7	14.0
4541946	CA13NA042****(A,B)	CSPH*4812A**	58CV(A,X)110−20	41,500	11.7	14.0
4541947	CA13NA042****(A,B)	CSPH*4812A**	58CV(A,X)135−22	41,500	11.7	14.0
4541948	CA13NA042****(A,B)	CSPH*4812A**	58CV(A,X)155−22	41,500	11.7	14.0
4541959	CA13NA042****(A,B)	CSPH*4812A**	58HDV060−−12	41,500	11.0	13.5
4541960	CA13NA042****(A,B)	CSPH*4812A**	58HDV080−−20	41,500	11.5	14.0
4541961	CA13NA042****(A,B)	CSPH*4812A**	58HDV100−−20	41,500	11.5	14.0
4541954	CA13NA042****(A,B)	CSPH*4812A**	58ME(B,C)060−12	41,000	11.7	14.0
4541955	CA13NA042****(A,B)	CSPH*4812A**	58ME(B,C)080−12	41,000	11.7	14.0
4541956	CA13NA042****(A,B)	CSPH*4812A**	58ME(B,C)080−16	41,000	11.7	14.0
4541957	CA13NA042****(A,B)	CSPH*4812A**	58ME(B,C)100−20	41,000	12.0	14.0
4541958	CA13NA042****(A,B)	CSPH*4812A**	58ME(B,C)120−20	41,000	12.0	14.0
4541953	CA13NA042****(A,B)	CSPH*4812A**	58MEB040−12	41,000	11.7	14.0
4541939	CA13NA042****(A,B)	CSPH*4812A**	58MV(B,C)060−14	41,500	11.5	13.5
4541940	CA13NA042****(A,B)	CSPH*4812A**	58MV(B,C)080−14	41,500	11.5	13.5
4541941	CA13NA042****(A,B)	CSPH*4812A**	58MV(B,C)080−20	41,500	11.7	14.0
4541942	CA13NA042****(A,B)	CSPH*4812A**	58MV(B,C)100−20	41,500	11.7	14.0

See notes on page 39

AHRI COMBINATION RATINGS* CONTINUED

AHRI Ref. No.	Model Number	Indoor Model	Furnace Model	Capacity	EER	SEER
4541943	CA13NA042****(A,B)	CSPH*4812A**	58MV(B,C)120−20	41,500	11.7	14.0
4541938	CA13NA042****(A,B)	CSPH*4812A**	58MVB040−14	41,000	11.5	13.5
4541949	CA13NA042****(A,B)	CSPH*4812A**	58PH*070−16	41,000	11.2	13.5
4541950	CA13NA042****(A,B)	CSPH*4812A**	58PH*090−16	41,000	12.0	14.0
4541951	CA13NA042****(A,B)	CSPH*4812A**	58PH*110−20	41,000	12.0	14.0
4541952	CA13NA042****(A,B)	CSPH*4812A**	58PH*135−20	41,000	12.0	14.0
4541963	CA13NA042****(A,B)	CSPH*4812A**	58VLR120−20	41,000	11.7	14.0
4541962	CA13NA042****(A,B)	CSPH*4812A**	58VMR120−20	41,000	11.7	14.0
4742234	CA13NA042****(A,B)	CSPH*4812A**	59*N*A060V17**14	40,500	11.4	13.7
4742235	CA13NA042****(A,B)	CSPH*4812A**	59*N*A080V17**14	41,000	11.5	14.0
4742236	CA13NA042****(A,B)	CSPH*4812A**	59*N*A100V21**20	41,000	11.8	14.2
4742237	CA13NA042****(A,B)	CSPH*4812A**	59*N*A120V24**22	41,000	12.0	14.5
4742238	CA13NA042****(A,B)	CSPH*4812A**	59*P5A060E17**14	41,000	11.4	13.7
4742239	CA13NA042****(A,B)	CSPH*4812A**	59*P5A080E17**16	41,000	11.4	13.7
4742240	CA13NA042****(A,B)	CSPH*4812A**	59*P5A100E21**16	41,000	11.8	14.2
4742241	CA13NA042****(A,B)	CSPH*4812A**	59*P5A120E24**22	41,500	11.8	14.2
4541965	CA13NA042****(A,B)	CSPH*4812A**	OVLAAB048112	41,500	11.2	13.5
4541966	CA13NA042****(A,B)	CSPH*4812A**	OVLAAB060154	42,500	11.7	14.0
4541964	CA13NA042****(A,B)	CSPH*4812A**	OVMAAB042112	41,000	11.5	13.5
4541937	CA13NA042****(A,B)	CSPH*4812A**+TDR		41,500	11.0	13.2
4541978	CA13NA042****(A,B)	FB4CNF042		41,000	11.5	13.5
4541977	CA13NA042****(A,B)	FB4CNF042+TXV		41,000	11.5	14.0
4541980	CA13NA042****(A,B)	FB4CNF048		41,000	11.5	13.5
4541979	CA13NA042****(A,B)	FB4CNF048+TXV		41,000	11.5	14.0
4541967	CA13NA042****(A,B)	FB4CNF060		42,500	12.0	14.0
4541970	CA13NA042****(A,B)	FE4AN(B,F)003+UI		40,000	12.0	14.0
4541971	CA13NA042****(A,B)	FE4AN(B,F)005+UI		42,500	12.2	14.5
4541972	CA13NA042****(A,B)	FE4ANB006+UI		43,000	12.2	15.0
4541973	CA13NA042****(A,B)	FE5ANB004+UI		43,000	12.2	15.0
4541974	CA13NA042****(A,B)	FV4CN(B,F)003		40,500	11.5	14.0
4541975	CA13NA042****(A,B)	FV4CN(B,F)005		41,500	11.7	14.0
4541976	CA13NA042****(A,B)	FV4CNB006		42,500	12.0	14.0
4541968	CA13NA042****(A,B)	FX4DN(B,F)043		41,500	11.5	14.0
4541969	CA13NA042****(A,B)	FX4DN(B,F)049		42,000	12.0	14.5
4640672	CA13NA042****(A,B)	FX4DN(B,F)061		42,500	12.0	14.5
4541982	CA13NA042****(A,B)	FY5BNF042		41,000	11.0	13.0
4541981	CA13NA042****(A,B)	FY5BNF042+TXV		41,000	11.0	13.0
4541984	CA13NA042****(A,B)	FY5BNF048		42,000	11.0	13.0
4541983	CA13NA042****(A,B)	FY5BNF048+TXV		42,000	11.0	13.0
4541985	CA13NA048****(A,B)	†CAP**4821A**+TDR		46,000	11.0	13.2
4541987	CA13NA048****(A,B)	CAP**4817A**	58CV(A,X)090−16	45,000	11.5	13.5
4541989	CA13NA048****(A,B)	CAP**4817A**	58ME(B,C)080−16	45,000	11.0	13.5
4541988	CA13NA048****(A,B)	CAP**4817A**	58PH*070−16	45,000	11.0	13.0
4742242	CA13NA048****(A,B)	CAP**4817A**	59*P5A080E17**16	45,000	11.2	13.2
4541986	CA13NA048****(A,B)	CAP**4817A**+TDR		45,000	11.0	13.2
4541994	CA13NA048****(A,B)	CAP**4821A**	58CV(A,X)110−20	45,000	11.7	13.5
4541997	CA13NA048****(A,B)	CAP**4821A**	58ME(B,C)100−20	45,000	11.7	14.0
4541990	CA13NA048****(A,B)	CAP**4821A**	58MV(B,C)080−20	44,500	11.5	13.5
4541991	CA13NA048****(A,B)	CAP**4821A**	58MV(B,C)100−20	45,000	11.2	13.5
4541995	CA13NA048****(A,B)	CAP**4821A**	58PH*090−16	45,000	11.7	13.5
4541996	CA13NA048****(A,B)	CAP**4821A**	58PH*110−20	45,000	11.7	14.0
4541992	CA13NA048****(A,B)	CAP**4821A**	58UVB080−20	44,500	11.5	13.5
4541993	CA13NA048****(A,B)	CAP**4821A**	58UVB100−20	45,000	11.2	13.5
4541999	CA13NA048****(A,B)	CAP**4821A**	58VLR120−20	45,000	11.5	13.5
4541998	CA13NA048****(A,B)	CAP**4821A**	58VMR120−20	45,000	11.2	13.5
4742243	CA13NA048****(A,B)	CAP**4821A**	59*N*A100V21**20	44,500	11.3	13.5
4742244	CA13NA048****(A,B)	CAP**4821A**	59*P5A080E17**16	44,500	11.0	13.3
4742245	CA13NA048****(A,B)	CAP**4821A**	59*P5A100E21**16	45,000	11.2	13.5
4542000	CA13NA048****(A,B)	CAP**4821A**	OVLAAB048112	45,000	11.0	13.0
4542030	CA13NA048****(A,B)	CAP**4823A**	58HDV080−−20	45,500	11.0	13.0
4742257	CA13NA048****(A,B)	CAP**4823A**	59*N*A100V21**20	44,500	11.4	13.7
4742258	CA13NA048****(A,B)	CAP**4823A**	59*N*A120V24**22	44,500	11.5	14.0
4742259	CA13NA048****(A,B)	CAP**4823A**	59*P5A100E21**16	45,000	11.2	13.5
4742260	CA13NA048****(A,B)	CAP**4823A**	59*P5A120E24**22	45,000	11.4	13.7
4542029	CA13NA048****(A,B)	CAP**4823A**+TDR		46,000	11.0	13.2
4542004	CA13NA048****(A,B)	CAP**4824A**	58CV(A,X)135−22	45,000	11.7	14.0
4542005	CA13NA048****(A,B)	CAP**4824A**	58CV(A,X)155−22	45,000	12.0	14.0
4542008	CA13NA048****(A,B)	CAP**4824A**	58HDV100−−20	45,000	11.5	13.5
4542007	CA13NA048****(A,B)	CAP**4824A**	58ME(B,C)120−20	45,000	11.7	14.0
4542002	CA13NA048****(A,B)	CAP**4824A**	58MV(B,C)120−20	45,000	11.5	13.5
4542006	CA13NA048****(A,B)	CAP**4824A**	58PH*135−20	45,500	11.7	13.5
4542003	CA13NA048****(A,B)	CAP**4824A**	58UVB120−20	45,000	11.5	13.5

See notes on page 39

AHRI COMBINATION RATINGS* CONTINUED

AHRI Ref. No.	Model Number	Indoor Model	Furnace Model	Capacity	EER	SEER
4742246	CA13NA048****(A,B)	CAP**4824A**	59*N*A100V21**20	44,500	11.4	13.7
4742247	CA13NA048****(A,B)	CAP**4824A**	59*N*A120V24**22	45,000	11.5	14.0
4742248	CA13NA048****(A,B)	CAP**4824A**	59*P5A100E21**16	45,000	11.4	13.7
4742249	CA13NA048****(A,B)	CAP**4824A**	59*P5A120E24**22	45,000	11.5	14.0
4542001	CA13NA048****(A,B)	CAP**4824A**+TDR		45,500	11.0	13.2
4542014	CA13NA048****(A,B)	CAP**6021A**	58CV(A,X)110−20	46,000	12.0	14.0
4542017	CA13NA048****(A,B)	CAP**6021A**	58ME(B,C)100−20	45,000	12.0	14.0
4542010	CA13NA048****(A,B)	CAP**6021A**	58MV(B,C)080−20	45,000	11.7	13.5
4542011	CA13NA048****(A,B)	CAP**6021A**	58MV(B,C)100−20	46,000	11.7	13.5
4542015	CA13NA048****(A,B)	CAP**6021A**	58PH*090−16	46,000	12.0	14.0
4542016	CA13NA048****(A,B)	CAP**6021A**	58PH*110−20	46,000	12.0	14.0
4542012	CA13NA048****(A,B)	CAP**6021A**	58UVB080−20	45,000	11.7	13.5
4542013	CA13NA048****(A,B)	CAP**6021A**	58UVB100−20	46,000	11.7	13.5
4542019	CA13NA048****(A,B)	CAP**6021A**	58VLR120−20	46,000	11.7	14.0
4542018	CA13NA048****(A,B)	CAP**6021A**	58VMR120−20	46,000	11.5	13.5
4742250	CA13NA048****(A,B)	CAP**6021A**	59*N*A100V21**20	45,500	11.5	14.0
4742251	CA13NA048****(A,B)	CAP**6021A**	59*P5A080E17**16	45,500	11.4	13.7
4742252	CA13NA048****(A,B)	CAP**6021A**	59*P5A100E21**16	46,000	11.4	13.7
4542020	CA13NA048****(A,B)	CAP**6021A**	OVLAAB048112	46,000	11.0	13.2
4542009	CA13NA048****(A,B)	CAP**6021A**+TDR		46,000	11.2	13.2
4542024	CA13NA048****(A,B)	CAP**6024A**	58CV(A,X)135−22	46,000	12.0	14.0
4542025	CA13NA048****(A,B)	CAP**6024A**	58CV(A,X)155−22	46,000	12.2	14.5
4542028	CA13NA048****(A,B)	CAP**6024A**	58HDV100−−20	45,500	11.5	13.5
4542027	CA13NA048****(A,B)	CAP**6024A**	58ME(B,C)120−20	45,000	12.0	14.0
4542022	CA13NA048****(A,B)	CAP**6024A**	58MV(B,C)120−20	46,000	11.7	14.0
4542026	CA13NA048****(A,B)	CAP**6024A**	58PH*135−20	46,000	12.0	14.0
4542023	CA13NA048****(A,B)	CAP**6024A**	58UVB120−20	46,000	11.7	14.0
4742253	CA13NA048****(A,B)	CAP**6024A**	59*N*A100V21**20	45,500	11.5	14.0
4742254	CA13NA048****(A,B)	CAP**6024A**	59*N*A120V24**22	45,500	11.8	14.2
4742255	CA13NA048****(A,B)	CAP**6024A**	59*P5A100E21**16	46,000	11.4	13.7
4742256	CA13NA048****(A,B)	CAP**6024A**	59*P5A120E24**22	46,000	11.8	14.2
4542021	CA13NA048****(A,B)	CAP**6024A**+TDR		46,500	11.2	13.2
4542034	CA13NA048****(A,B)	CAP**6025A**	58CV(A,X)135−22	46,000	11.7	14.0
4542035	CA13NA048****(A,B)	CAP**6025A**	58CV(A,X)155−22	46,000	12.0	14.5
4542038	CA13NA048****(A,B)	CAP**6025A**	58HDV100−−20	46,500	11.0	13.5
4542037	CA13NA048****(A,B)	CAP**6025A**	58ME(B,C)120−20	46,500	12.0	14.0
4542032	CA13NA048****(A,B)	CAP**6025A**	58MV(B,C)120−20	46,000	11.7	14.0
4542036	CA13NA048****(A,B)	CAP**6025A**	58PH*135−20	46,000	11.7	14.0
4542033	CA13NA048****(A,B)	CAP**6025A**	58UVB120−20	46,000	11.7	14.0
4742261	CA13NA048****(A,B)	CAP**6025A**	59*N*A100V21**20	45,500	11.5	14.0
4742262	CA13NA048****(A,B)	CAP**6025A**	59*N*A120V24**22	45,500	11.8	14.2
4742263	CA13NA048****(A,B)	CAP**6025A**	59*P5A100E21**16	46,000	11.4	13.7
4742264	CA13NA048****(A,B)	CAP**6025A**	59*P5A120E24**22	46,000	11.8	14.2
4542031	CA13NA048****(A,B)	CAP**6025A**+TDR		46,000	11.0	13.2
4542079	CA13NA048****(A,B)	CNPH*4821A**	58CV(A,X)090−16	45,000	11.7	13.5
4542080	CA13NA048****(A,B)	CNPH*4821A**	58CV(A,X)110−20	45,000	11.7	13.5
4542081	CA13NA048****(A,B)	CNPH*4821A**	58CV(A,X)135−22	45,000	11.7	14.0
4542082	CA13NA048****(A,B)	CNPH*4821A**	58CV(A,X)155−22	45,500	12.0	14.0
4542090	CA13NA048****(A,B)	CNPH*4821A**	58HDV080−−20	45,500	11.2	13.2
4542091	CA13NA048****(A,B)	CNPH*4821A**	58HDV100−−20	45,500	11.2	13.5
4542087	CA13NA048****(A,B)	CNPH*4821A**	58ME(B,C)080−16	45,000	11.5	13.5
4542088	CA13NA048****(A,B)	CNPH*4821A**	58ME(B,C)100−20	45,000	11.7	14.0
4542089	CA13NA048****(A,B)	CNPH*4821A**	58ME(B,C)120−20	45,000	11.7	14.0
4542076	CA13NA048****(A,B)	CNPH*4821A**	58MV(B,C)080−20	44,500	11.5	13.5
4542077	CA13NA048****(A,B)	CNPH*4821A**	58MV(B,C)100−20	45,000	11.2	13.5
4542078	CA13NA048****(A,B)	CNPH*4821A**	58MV(B,C)120−20	45,000	11.7	13.5
4542083	CA13NA048****(A,B)	CNPH*4821A**	58PH*070−16	45,000	11.0	13.0
4542084	CA13NA048****(A,B)	CNPH*4821A**	58PH*090−16	45,000	11.7	13.5
4542085	CA13NA048****(A,B)	CNPH*4821A**	58PH*110−20	45,000	11.7	14.0
4542086	CA13NA048****(A,B)	CNPH*4821A**	58PH*135−20	45,500	11.7	13.5
4542093	CA13NA048****(A,B)	CNPH*4821A**	58VLR120−20	45,000	11.5	13.5
4542092	CA13NA048****(A,B)	CNPH*4821A**	58VMR120−20	45,000	11.5	13.5
4742280	CA13NA048****(A,B)	CNPH*4821A**	59*N*A100V21**20	45,000	11.4	13.7
4742281	CA13NA048****(A,B)	CNPH*4821A**	59*N*A120V24**22	45,000	11.8	14.2
4742282	CA13NA048****(A,B)	CNPH*4821A**	59*P5A080E17**16	45,000	11.0	13.3
4742283	CA13NA048****(A,B)	CNPH*4821A**	59*P5A100E21**16	45,000	11.4	13.7
4742284	CA13NA048****(A,B)	CNPH*4821A**	59*P5A120E24**22	45,500	11.5	14.0
4542094	CA13NA048****(A,B)	CNPH*4821A**	OVLAAB048112	45,000	11.0	13.2
4542095	CA13NA048****(A,B)	CNPH*4821A**	OVLAAB060154	46,000	11.2	13.2
4542075	CA13NA048****(A,B)	CNPH*4821A**+TDR		45,500	11.0	13.2
4542100	CA13NA048****(A,B)	CNPH*6024A**	58CV(A,X)090−16	46,000	11.7	14.0
4542101	CA13NA048****(A,B)	CNPH*6024A**	58CV(A,X)110−20	46,000	12.0	14.0
4542102	CA13NA048****(A,B)	CNPH*6024A**	58CV(A,X)135−22	46,000	12.0	14.0

See notes on page 39

AHRI COMBINATION RATINGS* CONTINUED

AHRI Ref. No.	Model Number	Indoor Model	Furnace Model	Capacity	EER	SEER
4542103	CA13NA048****(A,B)	CNPH*6024A**	58CV(A,X)155−22	46,000	12.2	14.5
4542111	CA13NA048****(A,B)	CNPH*6024A**	58HDV080−−20	46,000	11.5	13.5
4542112	CA13NA048****(A,B)	CNPH*6024A**	58HDV100−−20	46,000	11.5	13.5
4542108	CA13NA048****(A,B)	CNPH*6024A**	58ME(B,C)080−16	45,000	11.5	13.5
4542109	CA13NA048****(A,B)	CNPH*6024A**	58ME(B,C)100−20	45,000	12.0	14.0
4542110	CA13NA048****(A,B)	CNPH*6024A**	58ME(B,C)120−20	45,000	12.0	14.0
4542097	CA13NA048****(A,B)	CNPH*6024A**	58MV(B,C)080−20	45,500	11.7	13.5
4542098	CA13NA048****(A,B)	CNPH*6024A**	58MV(B,C)100−20	46,000	11.7	13.5
4542099	CA13NA048****(A,B)	CNPH*6024A**	58MV(B,C)120−20	46,000	11.7	14.0
4542104	CA13NA048****(A,B)	CNPH*6024A**	58PH*070−16	45,500	11.0	13.0
4542105	CA13NA048****(A,B)	CNPH*6024A**	58PH*090−16	46,000	11.7	14.0
4542106	CA13NA048****(A,B)	CNPH*6024A**	58PH*110−20	46,000	12.0	14.0
4542107	CA13NA048****(A,B)	CNPH*6024A**	58PH*135−20	46,000	12.0	14.0
4542114	CA13NA048****(A,B)	CNPH*6024A**	58VLR120−20	46,000	11.7	14.0
4542113	CA13NA048****(A,B)	CNPH*6024A**	58VMR120−20	46,000	11.5	14.0
4742285	CA13NA048****(A,B)	CNPH*6024A**	59*N*A100V21**20	45,500	11.5	14.0
4742286	CA13NA048****(A,B)	CNPH*6024A**	59*N*A120V24**22	45,500	11.8	14.2
4742287	CA13NA048****(A,B)	CNPH*6024A**	59*P5A080E17**16	45,500	11.4	13.7
4742288	CA13NA048****(A,B)	CNPH*6024A**	59*P5A100E21**16	46,000	11.4	13.7
4742289	CA13NA048****(A,B)	CNPH*6024A**	59*P5A120E24**22	46,000	11.8	14.2
4542115	CA13NA048****(A,B)	CNPH*6024A**	OVLAAB048112	46,000	11.2	13.2
4542116	CA13NA048****(A,B)	CNPH*6024A**	OVLAAB060154	46,500	11.5	13.5
4542096	CA13NA048****(A,B)	CNPH*6024A**+TDR		46,500	11.2	13.2
4542121	CA13NA048****(A,B)	CNPH*6124A**	58CV(A,X)090−16	46,000	11.5	14.0
4542122	CA13NA048****(A,B)	CNPH*6124A**	58CV(A,X)110−20	46,500	11.5	14.0
4542123	CA13NA048****(A,B)	CNPH*6124A**	58CV(A,X)135−22	46,500	11.0	13.5
4542124	CA13NA048****(A,B)	CNPH*6124A**	58CV(A,X)155−22	46,500	12.0	14.5
4542132	CA13NA048****(A,B)	CNPH*6124A**	58HDV080−−20	46,500	11.0	13.5
4542133	CA13NA048****(A,B)	CNPH*6124A**	58HDV100−−20	46,500	11.0	13.5
4542129	CA13NA048****(A,B)	CNPH*6124A**	58ME(B,C)080−16	46,500	11.0	13.5
4542130	CA13NA048****(A,B)	CNPH*6124A**	58ME(B,C)100−20	46,000	11.0	13.5
4542131	CA13NA048****(A,B)	CNPH*6124A**	58ME(B,C)120−20	46,500	11.5	14.0
4640673	CA13NA048****(A,B)	CNPH*6124A**	58MEC100−20	46,500	11.5	14.0
4640674	CA13NA048****(A,B)	CNPH*6124A**	58MEC120−20	46,500	11.5	14.0
4542118	CA13NA048****(A,B)	CNPH*6124A**	58MV(B,C)080−20	46,000	11.0	13.5
4542119	CA13NA048****(A,B)	CNPH*6124A**	58MV(B,C)100−20	46,500	11.0	13.5
4542120	CA13NA048****(A,B)	CNPH*6124A**	58MV(B,C)120−20	46,500	11.5	14.0
4542125	CA13NA048****(A,B)	CNPH*6124A**	58PH*070−16	46,000	11.0	13.0
4542126	CA13NA048****(A,B)	CNPH*6124A**	58PH*090−16	46,500	11.5	14.0
4542127	CA13NA048****(A,B)	CNPH*6124A**	58PH*110−20	46,500	11.5	14.0
4542128	CA13NA048****(A,B)	CNPH*6124A**	58PH*135−20	46,500	11.5	14.0
4542135	CA13NA048****(A,B)	CNPH*6124A**	58VLR120−20	46,000	11.7	14.0
4542134	CA13NA048****(A,B)	CNPH*6124A**	58VMR120−20	46,000	11.5	14.0
4742290	CA13NA048****(A,B)	CNPH*6124A**	59*N*A100V21**20	46,000	11.5	14.0
4742291	CA13NA048****(A,B)	CNPH*6124A**	59*N*A120V24**22	46,000	11.8	14.2
4742292	CA13NA048****(A,B)	CNPH*6124A**	59*P5A080E17**16	46,000	11.4	13.7
4742293	CA13NA048****(A,B)	CNPH*6124A**	59*P5A100E21**16	46,000	11.5	14.0
4742294	CA13NA048****(A,B)	CNPH*6124A**	59*P5A120E24**22	46,500	11.8	14.2
4542136	CA13NA048****(A,B)	CNPH*6124A**	OVLAAB048112	46,000	11.2	13.2
4542137	CA13NA048****(A,B)	CNPH*6124A**	OVLAAB060154	46,500	11.5	13.5
4542117	CA13NA048****(A,B)	CNPH*6124A**+TDR		46,000	11.0	13.0
4542044	CA13NA048****(A,B)	CNPV*4821A**	58CV(A,X)110−20	45,000	11.7	13.5
4640675	CA13NA048****(A,B)	CNPV*4821A**	58HDV080−−20	45,500	11.2	13.2
4542047	CA13NA048****(A,B)	CNPV*4821A**	58ME(B,C)100−20	45,000	11.7	14.0
4542040	CA13NA048****(A,B)	CNPV*4821A**	58MV(B,C)080−20	44,500	11.5	13.5
4542041	CA13NA048****(A,B)	CNPV*4821A**	58MV(B,C)100−20	45,000	11.2	13.5
4542045	CA13NA048****(A,B)	CNPV*4821A**	58PH*090−16	45,000	11.7	13.5
4542046	CA13NA048****(A,B)	CNPV*4821A**	58PH*110−20	45,000	11.7	14.0
4542042	CA13NA048****(A,B)	CNPV*4821A**	58UVB080−20	44,500	11.5	13.5
4542043	CA13NA048****(A,B)	CNPV*4821A**	58UVB100−20	45,000	11.2	13.5
4542049	CA13NA048****(A,B)	CNPV*4821A**	58VLR120−20	45,000	11.5	13.5
4542048	CA13NA048****(A,B)	CNPV*4821A**	58VMR120−20	45,000	11.5	13.5
4742265	CA13NA048****(A,B)	CNPV*4821A**	59*N*A100V21**20	45,000	11.4	13.7
4742266	CA13NA048****(A,B)	CNPV*4821A**	59*P5A080E17**16	45,000	11.0	13.3
4742267	CA13NA048****(A,B)	CNPV*4821A**	59*P5A100E21**16	45,000	11.4	13.7
4542050	CA13NA048****(A,B)	CNPV*4821A**	OVLAAB048112	45,000	11.0	13.2
4542039	CA13NA048****(A,B)	CNPV*4821A**+TDR		45,500	11.0	13.2
4542054	CA13NA048****(A,B)	CNPV*4824A**	58CV(A,X)135−22	45,000	11.7	14.0
4542055	CA13NA048****(A,B)	CNPV*4824A**	58CV(A,X)155−22	45,000	12.0	14.0
4640676	CA13NA048****(A,B)	CNPV*4824A**	58HDV080−−20	45,500	11.2	13.2
4542058	CA13NA048****(A,B)	CNPV*4824A**	58HDV100−−20	45,500	11.2	13.5
4542057	CA13NA048****(A,B)	CNPV*4824A**	58ME(B,C)120−20	45,000	11.7	14.0
4542052	CA13NA048****(A,B)	CNPV*4824A**	58MV(B,C)120−20	45,000	11.5	13.5

See notes on page 39

AHRI COMBINATION RATINGS* CONTINUED

AHRI Ref. No.	Model Number	Indoor Model	Furnace Model	Capacity	EER	SEER
4542056	CA13NA048****(A,B)	CNPV*4824A**	58PH*135−20	45,500	11.7	13.5
4542053	CA13NA048****(A,B)	CNPV*4824A**	58UVB120−20	45,000	11.5	13.5
4742268	CA13NA048****(A,B)	CNPV*4824A**	59*N*A100V21**20	45,000	11.4	13.7
4742269	CA13NA048****(A,B)	CNPV*4824A**	59*N*A120V24**22	45,000	11.8	14.2
4742270	CA13NA048****(A,B)	CNPV*4824A**	59*P5A100E21**16	45,000	11.4	13.7
4742271	CA13NA048****(A,B)	CNPV*4824A**	59*P5A120E24**22	45,500	11.5	14.0
4640677	CA13NA048****(A,B)	CNPV*4824A**	OVLAAB048112	45,000	11.0	13.2
4640678	CA13NA048****(A,B)	CNPV*4824A**	OVLAAB060154	46,000	11.2	13.2
4542051	CA13NA048****(A,B)	CNPV*4824A**+TDR		45,500	11.0	13.2
4542062	CA13NA048****(A,B)	CNPV*6024A**	58CV(A,X)135−22	46,000	12.0	14.0
4542063	CA13NA048****(A,B)	CNPV*6024A**	58CV(A,X)155−22	46,000	12.2	14.5
4640679	CA13NA048****(A,B)	CNPV*6024A**	58HDV080−−20	46,000	11.5	13.5
4542066	CA13NA048****(A,B)	CNPV*6024A**	58HDV100−−20	46,000	11.5	13.5
4542065	CA13NA048****(A,B)	CNPV*6024A**	58ME(B,C)120−20	45,000	12.0	14.0
4542060	CA13NA048****(A,B)	CNPV*6024A**	58MV(B,C)120−20	46,000	11.7	14.0
4542064	CA13NA048****(A,B)	CNPV*6024A**	58PH*135−20	46,000	12.0	14.0
4542061	CA13NA048****(A,B)	CNPV*6024A**	58UVB120−20	46,000	11.7	14.0
4742272	CA13NA048****(A,B)	CNPV*6024A**	59*N*A100V21**20	45,500	11.5	14.0
4742273	CA13NA048****(A,B)	CNPV*6024A**	59*N*A120V24**22	45,500	11.8	14.2
4742274	CA13NA048****(A,B)	CNPV*6024A**	59*P5A100E21**16	46,000	11.4	13.7
4742275	CA13NA048****(A,B)	CNPV*6024A**	59*P5A120E24**22	46,000	11.8	14.2
4640680	CA13NA048****(A,B)	CNPV*6024A**	OVLAAB048112	46,000	11.2	13.2
4640681	CA13NA048****(A,B)	CNPV*6024A**	OVLAAB060154	46,500	11.5	13.5
4542059	CA13NA048****(A,B)	CNPV*6024A**+TDR		46,500	11.2	13.2
4542070	CA13NA048****(A,B)	CNPV*6124A**	58CV(A,X)135−22	46,500	12.0	14.5
4542071	CA13NA048****(A,B)	CNPV*6124A**	58CV(A,X)155−22	46,500	12.0	14.5
4640683	CA13NA048****(A,B)	CNPV*6124A**	58HDV080−−20	46,500	11.5	13.5
4542074	CA13NA048****(A,B)	CNPV*6124A**	58HDV100−−20	46,500	11.7	14.0
4542073	CA13NA048****(A,B)	CNPV*6124A**	58ME(B,C)120−20	46,500	12.0	14.5
4640682	CA13NA048****(A,B)	CNPV*6124A**	58MEC120−20	46,500	12.0	14.5
4542068	CA13NA048****(A,B)	CNPV*6124A**	58MV(B,C)120−20	46,500	11.5	14.0
4542072	CA13NA048****(A,B)	CNPV*6124A**	58PH*135−20	46,500	11.5	14.0
4542069	CA13NA048****(A,B)	CNPV*6124A**	58UVB120−20	46,500	11.5	14.0
4742276	CA13NA048****(A,B)	CNPV*6124A**	59*N*A100V21**20	46,000	11.8	14.2
4742277	CA13NA048****(A,B)	CNPV*6124A**	59*N*A120V24**22	46,000	12.0	14.5
4742278	CA13NA048****(A,B)	CNPV*6124A**	59*P5A100E21**16	46,500	11.5	14.0
4742279	CA13NA048****(A,B)	CNPV*6124A**	59*P5A120E24**22	47,000	12.0	14.5
4640684	CA13NA048****(A,B)	CNPV*6124A**	OVLAAB048112	46,000	11.2	13.5
4640685	CA13NA048****(A,B)	CNPV*6124A**	OVLAAB060154	47,000	11.7	13.5
4542067	CA13NA048****(A,B)	CNPV*6124A**+TDR		46,500	11.0	13.0
4542142	CA13NA048****(A,B)	CSPH*4812A**	58CV(A,X)090−16	45,500	11.7	13.5
4542143	CA13NA048****(A,B)	CSPH*4812A**	58CV(A,X)110−20	45,000	11.7	13.5
4542144	CA13NA048****(A,B)	CSPH*4812A**	58CV(A,X)135−22	45,000	11.7	14.0
4542145	CA13NA048****(A,B)	CSPH*4812A**	58CV(A,X)155−22	45,000	12.0	14.0
4542153	CA13NA048****(A,B)	CSPH*4812A**	58HDV080−−20	46,000	11.0	13.5
4542154	CA13NA048****(A,B)	CSPH*4812A**	58HDV100−−20	46,000	11.0	13.5
4542150	CA13NA048****(A,B)	CSPH*4812A**	58ME(B,C)080−16	45,000	11.5	13.5
4542151	CA13NA048****(A,B)	CSPH*4812A**	58ME(B,C)100−20	45,000	11.7	14.0
4542152	CA13NA048****(A,B)	CSPH*4812A**	58ME(B,C)120−20	45,000	11.7	14.0
4542139	CA13NA048****(A,B)	CSPH*4812A**	58MV(B,C)080−20	44,500	11.5	13.5
4542140	CA13NA048****(A,B)	CSPH*4812A**	58MV(B,C)100−20	45,000	11.2	13.5
4542141	CA13NA048****(A,B)	CSPH*4812A**	58MV(B,C)120−20	45,000	11.5	13.5
4542146	CA13NA048****(A,B)	CSPH*4812A**	58PH*070−16	45,000	11.0	13.0
4542147	CA13NA048****(A,B)	CSPH*4812A**	58PH*090−16	45,000	11.7	13.5
4542148	CA13NA048****(A,B)	CSPH*4812A**	58PH*110−20	45,000	11.7	14.0
4542149	CA13NA048****(A,B)	CSPH*4812A**	58PH*135−20	45,500	11.7	13.5
4542156	CA13NA048****(A,B)	CSPH*4812A**	58VLR120−20	45,500	11.5	13.5
4542155	CA13NA048****(A,B)	CSPH*4812A**	58VMR120−20	45,500	11.5	13.5
4742295	CA13NA048****(A,B)	CSPH*4812A**	59*N*A100V21**20	45,000	11.4	13.7
4742296	CA13NA048****(A,B)	CSPH*4812A**	59*N*A120V24**22	45,000	11.5	14.0
4742297	CA13NA048****(A,B)	CSPH*4812A**	59*P5A080E17**16	45,000	11.2	13.5
4742298	CA13NA048****(A,B)	CSPH*4812A**	59*P5A100E21**16	45,500	11.4	13.7
4742299	CA13NA048****(A,B)	CSPH*4812A**	59*P5A120E24**22	45,500	11.5	14.0
4542157	CA13NA048****(A,B)	CSPH*4812A**	OVLAAB048112	45,500	11.0	13.0
4542158	CA13NA048****(A,B)	CSPH*4812A**	OVLAAB060154	46,000	11.2	13.2
4542138	CA13NA048****(A,B)	CSPH*4812A**+TDR		46,000	11.0	13.2
4542163	CA13NA048****(A,B)	CSPH*6012A**	58CV(A,X)090−16	46,000	12.0	14.0
4542164	CA13NA048****(A,B)	CSPH*6012A**	58CV(A,X)110−20	46,000	12.0	14.0
4542165	CA13NA048****(A,B)	CSPH*6012A**	58CV(A,X)135−22	46,000	12.0	14.0
4542166	CA13NA048****(A,B)	CSPH*6012A**	58CV(A,X)155−22	46,000	12.2	14.5
4542174	CA13NA048****(A,B)	CSPH*6012A**	58HDV080−−20	47,000	11.0	13.5
4542175	CA13NA048****(A,B)	CSPH*6012A**	58HDV100−−20	46,500	11.0	13.5
4542171	CA13NA048****(A,B)	CSPH*6012A**	58ME(B,C)080−16	45,000	11.7	14.0

See notes on page 39

AHRI COMBINATION RATINGS* CONTINUED

AHRI Ref. No.	Model Number	Indoor Model	Furnace Model	Capacity	EER	SEER
4542172	CA13NA048****(A,B)	CSPH*6012A**	58ME(B,C)100−20	45,000	12.0	14.0
4542173	CA13NA048****(A,B)	CSPH*6012A**	58ME(B,C)120−20	45,000	12.0	14.0
4542160	CA13NA048****(A,B)	CSPH*6012A**	58MV(B,C)080−20	45,500	11.7	13.5
4542161	CA13NA048****(A,B)	CSPH*6012A**	58MV(B,C)100−20	46,000	11.7	13.5
4542162	CA13NA048****(A,B)	CSPH*6012A**	58MV(B,C)120−20	46,000	11.7	14.0
4542167	CA13NA048****(A,B)	CSPH*6012A**	58PH*070−16	46,000	11.0	13.0
4542168	CA13NA048****(A,B)	CSPH*6012A**	58PH*090−16	46,000	12.0	14.0
4542169	CA13NA048****(A,B)	CSPH*6012A**	58PH*110−20	46,000	12.0	14.0
4542170	CA13NA048****(A,B)	CSPH*6012A**	58PH*135−20	46,000	12.0	14.0
4542177	CA13NA048****(A,B)	CSPH*6012A**	58VLR120−20	46,000	11.7	14.0
4542176	CA13NA048****(A,B)	CSPH*6012A**	58VMR120−20	46,000	11.7	14.0
4742300	CA13NA048****(A,B)	CSPH*6012A**	59*N*A100V21**20	46,000	11.8	14.2
4742301	CA13NA048****(A,B)	CSPH*6012A**	59*N*A120V24**22	46,000	12.0	14.5
4742302	CA13NA048****(A,B)	CSPH*6012A**	59*P5A080E17**16	46,000	11.4	13.7
4742303	CA13NA048****(A,B)	CSPH*6012A**	59*P5A100E21**16	46,000	11.5	14.0
4742304	CA13NA048****(A,B)	CSPH*6012A**	59*P5A120E24**22	46,500	11.8	14.2
4542178	CA13NA048****(A,B)	CSPH*6012A**	OVLAAB048112	46,000	11.2	13.5
4542179	CA13NA048****(A,B)	CSPH*6012A**	OVLAAB060154	46,500	11.5	13.5
4542159	CA13NA048****(A,B)	CSPH*6012A**+TDR		46,500	11.2	13.2
4542189	CA13NA048****(A,B)	FB4CNF048		44,500	11.0	13.0
4542188	CA13NA048****(A,B)	FB4CNF048+TXV		45,000	11.0	13.5
4542180	CA13NA048****(A,B)	FB4CNF060		45,500	11.5	14.0
4542184	CA13NA048****(A,B)	FE4AN(B,F)005+UI		46,000	12.0	14.0
4542185	CA13NA048****(A,B)	FE4ANB006+UI		47,000	12.2	14.5
4542186	CA13NA048****(A,B)	FV4CN(B,F)005		46,000	12.0	14.0
4542187	CA13NA048****(A,B)	FV4CNB006		46,500	12.2	14.5
4542182	CA13NA048****(A,B)	FX4DN(B,F)049		46,500	12.0	14.5
4542183	CA13NA048****(A,B)	FX4DN(B,F)061		47,000	12.0	14.5
4542181	CA13NA048****(A,B)	FY5BNB060		46,000	11.0	13.0
4542191	CA13NA048****(A,B)	FY5BNF048		45,500	11.0	13.0
4542190	CA13NA048****(A,B)	FY5BNF048+TXV		45,500	11.0	13.0
4542192	CA13NA060****(A,B)	†CAP**6024A**+TDR		57,500	11.0	13.0
4542194	CA13NA060****(A,B)	CAP**6021A**	58CV(A,X)110−20	56,500	11.0	13.0
4542196	CA13NA060****(A,B)	CAP**6021A**	58ME(B,C)100−20	56,500	11.0	13.2
4542195	CA13NA060****(A,B)	CAP**6021A**	58PH*110−20	56,500	11.2	13.2
4542197	CA13NA060****(A,B)	CAP**6021A**	58VLR120−20	56,000	11.0	13.0
4542193	CA13NA060****(A,B)	CAP**6021A**+TDR		56,500	11.0	13.0
4542200	CA13NA060****(A,B)	CAP**6024A**	58CV(A,X)135−22	56,500	11.2	13.2
4542201	CA13NA060****(A,B)	CAP**6024A**	58CV(A,X)155−22	57,000	11.2	13.2
4542203	CA13NA060****(A,B)	CAP**6024A**	58ME(B,C)120−20	56,500	11.0	13.2
4640689	CA13NA060****(A,B)	CAP**6024A**	58MEC120−20	56,500	11.0	13.2
4542198	CA13NA060****(A,B)	CAP**6024A**	58MV(B,C)120−20	56,000	11.0	13.0
4542202	CA13NA060****(A,B)	CAP**6024A**	58PH*135−20	56,000	11.0	13.2
4542199	CA13NA060****(A,B)	CAP**6024A**	58UVB120−20	56,000	11.0	13.0
4742305	CA13NA060****(A,B)	CAP**6024A**	59*N*A120V24**22	57,000	11.4	13.7
4742306	CA13NA060****(A,B)	CAP**6024A**	59*P5A120E24**22	57,000	11.4	13.7
4542207	CA13NA060****(A,B)	CAP**6025A**	58CV(A,X)135−22	56,000	11.2	13.2
4542208	CA13NA060****(A,B)	CAP**6025A**	58CV(A,X)155−22	56,500	11.2	13.5
4542210	CA13NA060****(A,B)	CAP**6025A**	58ME(B,C)120−20	56,000	11.2	13.2
4542205	CA13NA060****(A,B)	CAP**6025A**	58MV(B,C)120−20	56,000	11.0	13.0
4542209	CA13NA060****(A,B)	CAP**6025A**	58PH*135−20	56,000	11.0	13.2
4542206	CA13NA060****(A,B)	CAP**6025A**	58UVB120−20	56,000	10.8	13.0
4742307	CA13NA060****(A,B)	CAP**6025A**	59*N*A120V24**22	57,000	11.4	13.7
4742308	CA13NA060****(A,B)	CAP**6025A**	59*P5A120E24**22	57,000	11.4	13.7
4542204	CA13NA060****(A,B)	CAP**6025A**+TDR		57,500	11.0	13.0
4542229	CA13NA060****(A,B)	CNPH*6024A**	58CV(A,X)110−20	56,000	11.0	13.0
4542230	CA13NA060****(A,B)	CNPH*6024A**	58CV(A,X)135−22	56,500	11.2	13.2
4542231	CA13NA060****(A,B)	CNPH*6024A**	58CV(A,X)155−22	57,000	11.2	13.2
4542234	CA13NA060****(A,B)	CNPH*6024A**	58ME(B,C)080−16	56,000	11.0	13.0
4542235	CA13NA060****(A,B)	CNPH*6024A**	58ME(B,C)100−20	56,500	11.0	13.2
4542236	CA13NA060****(A,B)	CNPH*6024A**	58ME(B,C)120−20	56,500	11.0	13.2
4542228	CA13NA060****(A,B)	CNPH*6024A**	58MV(B,C)120−20	56,000	11.0	13.0
4542232	CA13NA060****(A,B)	CNPH*6024A**	58PH*110−20	56,500	11.2	13.2
4542233	CA13NA060****(A,B)	CNPH*6024A**	58PH*135−20	56,500	11.2	13.2
4542237	CA13NA060****(A,B)	CNPH*6024A**	58VLR120−20	56,000	11.0	13.0
4742313	CA13NA060****(A,B)	CNPH*6024A**	59*N*A120V24**22	57,000	11.4	13.7
4742314	CA13NA060****(A,B)	CNPH*6024A**	59*P5A120E24**22	57,000	11.4	13.7
4542227	CA13NA060****(A,B)	CNPH*6024A**+TDR		57,000	11.0	13.0
4542240	CA13NA060****(A,B)	CNPH*6124A**	58CV(A,X)110−20	57,000	11.0	13.0
4542241	CA13NA060****(A,B)	CNPH*6124A**	58CV(A,X)135−22	57,000	11.0	13.2
4542242	CA13NA060****(A,B)	CNPH*6124A**	58CV(A,X)155−22	57,500	11.0	13.2
4542245	CA13NA060****(A,B)	CNPH*6124A**	58ME(B,C)080−16	57,000	11.0	13.0

See notes on page 39

AHRI COMBINATION RATINGS* CONTINUED

AHRI Ref. No.	Model Number	Indoor Model	Furnace Model	Capacity	EER	SEER
4542246	CA13NA060****(A,B)	CNPH*6124A**	58ME(B,C)100−20	56,000	11.0	13.2
4542247	CA13NA060****(A,B)	CNPH*6124A**	58ME(B,C)120−20	56,500	11.0	13.2
4640690	CA13NA060****(A,B)	CNPH*6124A**	58MEC080−16	57,000	11.0	13.0
4640687	CA13NA060****(A,B)	CNPH*6124A**	58MEC100−20	57,000	11.0	13.2
4640688	CA13NA060****(A,B)	CNPH*6124A**	58MEC120−20	57,000	11.0	13.2
4542239	CA13NA060****(A,B)	CNPH*6124A**	58MV(B,C)120−20	56,000	11.0	13.0
4542243	CA13NA060****(A,B)	CNPH*6124A**	58PH*110−20	57,000	11.0	13.2
4542244	CA13NA060****(A,B)	CNPH*6124A**	58PH*135−20	57,000	11.0	13.2
4542248	CA13NA060****(A,B)	CNPH*6124A**	58VLR120−20	56,500	11.0	13.0
4742315	CA13NA060****(A,B)	CNPH*6124A**	59*N*A120V24**22	57,500	11.4	13.7
4742316	CA13NA060****(A,B)	CNPH*6124A**	59*P5A120E24**22	57,500	11.4	13.7
4542238	CA13NA060****(A,B)	CNPH*6124A**+TDR		57,500	11.0	13.0
4542214	CA13NA060****(A,B)	CNPV*6024A**	58CV(A,X)135−22	56,500	11.2	13.2
4542215	CA13NA060****(A,B)	CNPV*6024A**	58CV(A,X)155−22	57,000	11.2	13.2
4542218	CA13NA060****(A,B)	CNPV*6024A**	58HDV100−−20	56,000	10.8	13.0
4542217	CA13NA060****(A,B)	CNPV*6024A**	58ME(B,C)120−20	56,500	11.0	13.2
4542212	CA13NA060****(A,B)	CNPV*6024A**	58MV(B,C)120−20	56,000	11.0	13.0
4542216	CA13NA060****(A,B)	CNPV*6024A**	58PH*135−20	56,000	11.2	13.2
4542213	CA13NA060****(A,B)	CNPV*6024A**	58UVB120−20	56,000	11.0	13.0
4742309	CA13NA060****(A,B)	CNPV*6024A**	59*N*A120V24**22	57,000	11.4	13.7
4742310	CA13NA060****(A,B)	CNPV*6024A**	59*P5A120E24**22	57,000	11.4	13.7
4542211	CA13NA060****(A,B)	CNPV*6024A**+TDR		57,500	11.0	13.0
4542222	CA13NA060****(A,B)	CNPV*6124A**	58CV(A,X)135−22	57,500	11.0	13.5
4542223	CA13NA060****(A,B)	CNPV*6124A**	58CV(A,X)155−22	57,500	11.0	13.5
4542226	CA13NA060****(A,B)	CNPV*6124A**	58HDV100−−20	57,000	10.8	13.0
4542225	CA13NA060****(A,B)	CNPV*6124A**	58ME(B,C)120−20	57,000	11.2	13.5
4640686	CA13NA060****(A,B)	CNPV*6124A**	58MEC120−20	57,500	11.0	13.5
4542220	CA13NA060****(A,B)	CNPV*6124A**	58MV(B,C)120−20	57,500	11.0	13.0
4542224	CA13NA060****(A,B)	CNPV*6124A**	58PH*135−20	57,500	11.0	13.5
4542221	CA13NA060****(A,B)	CNPV*6124A**	58UVB120−20	57,500	11.0	13.0
4742311	CA13NA060****(A,B)	CNPV*6124A**	59*N*A120V24**22	58,000	11.5	14.0
4742312	CA13NA060****(A,B)	CNPV*6124A**	59*P5A120E24**22	58,000	11.4	13.7
4542219	CA13NA060****(A,B)	CNPV*6124A**+TDR		57,500	11.0	13.0
4542252	CA13NA060****(A,B)	CSPH*6012A**	58CV(A,X)110−20	56,500	11.2	13.2
4542253	CA13NA060****(A,B)	CSPH*6012A**	58CV(A,X)135−22	56,500	11.2	13.2
4542254	CA13NA060****(A,B)	CSPH*6012A**	58CV(A,X)155−22	56,500	11.2	13.2
4542260	CA13NA060****(A,B)	CSPH*6012A**	58HDV100−−20	56,500	10.8	13.0
4542257	CA13NA060****(A,B)	CSPH*6012A**	58ME(B,C)080−16	56,000	11.0	13.0
4542258	CA13NA060****(A,B)	CSPH*6012A**	58ME(B,C)100−20	56,500	11.0	13.2
4542259	CA13NA060****(A,B)	CSPH*6012A**	58ME(B,C)120−20	56,500	11.2	13.2
4542250	CA13NA060****(A,B)	CSPH*6012A**	58MV(B,C)100−20	56,000	10.8	13.0
4542251	CA13NA060****(A,B)	CSPH*6012A**	58MV(B,C)120−20	56,000	11.0	13.0
4542255	CA13NA060****(A,B)	CSPH*6012A**	58PH*110−20	56,500	11.2	13.2
4542256	CA13NA060****(A,B)	CSPH*6012A**	58PH*135−20	56,500	11.2	13.2
4542262	CA13NA060****(A,B)	CSPH*6012A**	58VLR120−20	56,500	11.0	13.2
4542261	CA13NA060****(A,B)	CSPH*6012A**	58VMR120−20	56,500	10.8	13.0
4742317	CA13NA060****(A,B)	CSPH*6012A**	59*N*A120V24**22	57,500	11.4	13.7
4742318	CA13NA060****(A,B)	CSPH*6012A**	59*P5A120E24**22	57,500	11.4	13.7
4542249	CA13NA060****(A,B)	CSPH*6012A**+TDR		57,500	11.0	13.0
4542263	CA13NA060****(A,B)	FB4CNF060		55,500	11.0	13.0
4542265	CA13NA060****(A,B)	FE4ANB006+UI		57,500	11.5	13.5
4542266	CA13NA060****(A,B)	FV4CNB006		57,500	11.5	13.5
4542264	CA13NA060****(A,B)	FX4DN(B,F)061		57,500	11.0	13.5

***** AHRI = Air Conditioning, Heating & Refrigeration Institute
† Tested combination
EERA — Energy Efficiency Ratio − 'A' conditions − 80°F (26.6°C) indoor db/67°F (19.4°C) indoor wb & 95°F (35°C) outdoor wb.
SEER — Seasonal Energy Efficiency Ratio
TDR — Time−Delay Relay. In most cases, only one method should be used to achieve TDR function. Using more than one method in a system may cause degradation in performance.
Use either the accessory Time−Delay Relay, KAATD0101TDR, or a furnace equipped with TDR. Most Carrier furnaces are equipped with TDR.
UI — User Interface

NOTES:

1. Ratings are net values reflecting the effects of circulating fan motor heat. Supplemental electric heat is not included.
2. Tested outdoor/indoor combinations have been tested in accordance with DOE test procedures for central air conditioners. Ratings for other combinations are determined under DOE computer simulation procedures.
3. Determine actual CFM values obtainable for your system by referring to fan performance data in fan coil or furnace coil literature.
4. Do not apply with capillary tube coils as performance and reliability are significantly affected.

DETAILED COOLING CAPACITIES#

EVAPORATOR AIR		CONDENSER ENTERING AIR TEMPERATURES °F (°C)																	
		75 (23.9)			85 (29.4)			95 (35)			105 (40.6)			115 (46.1)			125 (51.7)		
CFM	EWB °F (°C)	Capacity MBtuh		Total System KW**	Capacity MBtuh		Total System KW**	Capacity MBtuh		Total System KW**	Capacity MBtuh		Total System KW**	Capacity MBtuh		Total System KW**	Capacity MBtuh		Total System KW**
		Total	Sens‡		Total	Sens‡		Total	Sens‡		Total	Sens‡		Total	Sens‡		Total	Sens‡	
CA13NA018****(A,B) Outdoor Section With CAP**1814A** Indoor Section																			
525	72 (22.2)	20.79	10.51	1.27	19.89	10.18	1.42	18.93	9.83	1.58	17.94	9.47	1.77	16.87	9.09	1.97	15.67	8.67	2.20
	67 (19.4)	19.09	12.93	1.27	18.24	12.58	1.42	17.33	12.21	1.59	16.39	11.84	1.77	15.37	11.44	1.98	14.26	11.01	2.20
	63 (17.2)††	17.84	12.55	1.27	17.02	12.19	1.42	16.15	11.82	1.59	15.24	11.43	1.78	14.26	11.02	1.98	13.22	10.58	2.20
	62 (16.7)	17.53	15.32	1.27	16.74	14.95	1.42	15.91	14.57	1.59	15.04	14.16	1.78	14.17	14.17	1.98	13.33	13.33	2.20
	57 (13.9)	17.00	17.00	1.27	16.36	16.36	1.42	15.67	15.67	1.59	14.95	14.95	1.78	14.18	14.18	1.98	13.33	13.33	2.20
600	72 (22.2)	21.12	11.01	1.29	20.19	10.67	1.44	19.19	10.32	1.61	18.18	9.96	1.80	17.07	9.57	2.00	15.84	9.15	2.22
	67 (19.4)	19.42	13.74	1.29	18.54	13.39	1.45	17.60	13.02	1.61	16.63	12.65	1.80	15.59	12.24	2.00	14.44	11.80	2.23
	63 (17.2)††	18.17	13.32	1.30	17.32	12.96	1.45	16.43	12.58	1.62	15.49	12.19	1.80	14.48	11.77	2.01	13.40	11.33	2.23
	62 (16.7)	17.93	16.44	1.30	17.12	16.06	1.45	16.30	16.21	1.62	15.53	15.53	1.80	14.71	14.71	2.01	13.81	13.81	2.23
	57 (13.9)	17.70	17.70	1.30	17.02	17.02	1.45	16.29	16.29	1.62	15.53	15.53	1.80	14.71	14.71	2.01	13.81	13.81	2.23
675	72 (22.2)	21.35	11.48	1.32	20.39	11.14	1.47	19.37	10.79	1.64	18.34	10.43	1.83	17.20	10.04	2.03	15.94	9.61	2.25
	67 (19.4)	19.66	14.52	1.32	18.76	14.17	1.47	17.79	13.80	1.64	16.81	13.42	1.83	15.74	13.01	2.03	14.58	12.56	2.25
	63 (17.2)††	18.41	14.06	1.32	17.55	13.70	1.48	16.63	13.31	1.64	15.67	12.92	1.83	14.64	12.49	2.03	13.54	12.03	2.26
	62 (16.7)	18.28	18.11	1.32	17.55	17.55	1.48	16.79	16.79	1.64	15.99	15.99	1.83	15.13	15.13	2.03	14.18	14.18	2.25
	57 (13.9)	18.26	18.26	1.32	17.55	17.55	1.48	16.79	16.79	1.64	15.99	15.99	1.83	15.13	15.13	2.03	14.18	14.18	2.25

COOLING INDOOR MODEL	CAPACITY	POWER	FURNACE MODEL
*CAP**1814A**	1.00	1.00	
CAP**2414A**	1.02	1.01	
CAP**2417A**	1.02	1.01	
CAP**3619A**	1.00	0.99	
CNPH*2417A**	1.02	1.01	
CNPV*1814A**	1.00	1.00	
CNPV*1917A**	1.02	1.01	
CNPV*2414A**	1.02	1.01	
CNPV*2417A**	1.02	1.01	
CSPH*2412A**	1.02	1.01	
FB4CNF018	1.01	0.92	
FB4CNF018	1.01	0.92	
FB4CNF024	1.01	0.92	
FB4CNF024	1.01	0.92	
FE4ANF002	0.98	0.88	
FF1ENP018	0.99	0.99	
FF1ENP019	1.02	0.93	
FF1ENP024	0.99	0.99	
FF1ENP025	1.02	0.91	
FV4CNF002	0.98	0.88	
FX4DN(B,F)031	1.03	0.94	
FX4DNF019	1.02	0.93	
FX4DNF025	1.03	0.94	
FY5BNF018	1.01	1.00	
FY5BNF024	1.01	1.00	
CAP**1814A**	0.99	0.90	58CV(A,X)070–12
CAP**2414A**	1.01	0.90	58CV(A,X)070–12
CNPH*2417A**	1.01	0.90	58CV(A,X)070–12
CNPV*1814A**	0.99	0.90	58CV(A,X)070–12
CNPV*2414A**	1.01	0.90	58CV(A,X)070–12
CSPH*2412A**	1.02	0.91	58CV(A,X)070–12
CAP**2417A**	1.01	0.90	58CV(A,X)090–16
CNPH*2417A**	1.01	0.90	58CV(A,X)090–16
CNPV*1917A**	1.02	0.93	58CV(A,X)090–16
CNPV*2417A**	1.01	0.90	58CV(A,X)090–16

COOLING INDOOR MODEL	CAPACITY	POWER	FURNACE MODEL
CSPH*2412A**	1.02	0.91	58CV(A,X)090–16
CNPH*2417A**	1.02	0.93	58HDV040––12
CNPV*2417A**	1.02	0.93	58HDV040––12
CSPH*2412A**	1.05	0.95	58HDV040––12
CNPH*2417A**	1.02	0.93	58HDV060––12
CSPH*2412A**	1.05	0.95	58HDV060––12
CAP**2417A**	1.02	0.89	58ME(B,C)040–12
CNPH*2417A**	1.02	0.91	58ME(B,C)040–12
CNPV*2417A**	1.02	0.91	58ME(B,C)040–12
CSPH*2412A**	1.02	0.91	58ME(B,C)040–12
CAP**2417A**	1.02	0.89	58ME(B,C)060–12
CNPH*2417A**	1.02	0.91	58ME(B,C)060–12
CNPV*2417A**	1.02	0.91	58ME(B,C)060–12
CSPH*2412A**	1.02	0.91	58ME(B,C)060–12
CAP**2417A**	1.02	0.89	58MEB040–12
CNPV*2417A**	1.02	0.91	58MEB040–12
CSPH*2412A**	1.02	0.91	58MEB040–12
CAP**2417A**	1.01	0.90	58MV(B,C)060–14
CNPH*2417A**	1.01	0.90	58MV(B,C)060–14
CNPV*1917A**	1.02	0.93	58MV(B,C)060–14
CNPV*2417A**	1.01	0.90	58MV(B,C)060–14
CSPH*2412A**	1.02	0.91	58MV(B,C)060–14
CNPH*2417A**	1.01	0.90	58MV(B,C)080–14
CSPH*2412A**	1.02	0.91	58MV(B,C)080–14
CNPH*2417A**	1.01	0.90	58MVB040–14
CSPH*2412A**	1.01	0.90	58MVB040–14
CAP**1814A**	1.01	0.92	58PH*045–08
CAP**2414A**	1.02	0.91	58PH*045–08
CNPH*2417A**	1.01	0.90	58PH*045–08
CNPV*1814A**	1.01	0.92	58PH*045–08
CNPV*2414A**	1.02	0.91	58PH*045–08
CSPH*2412A**	1.02	0.91	58PH*045–08
CAP**2417A**	1.01	0.90	58UVB060–14
CNPV*1917A**	1.02	0.93	58UVB060–14
CNPV*2417A**	1.01	0.90	58UVB060–14

COOLING INDOOR MODEL	CAPACITY	POWER	FURNACE MODEL
CAP**2417A**	1.01	0.92	58VLR105–12
CAP**2417A**	1.01	0.92	58VMR105–12
CAP**2417A**	1.01	0.92	59*N*A060V17**14
CNPH*2417A**	1.02	0.92	59*N*A060V17**14
CNPV*1917A**	1.02	0.93	59*N*A060V17**14
CNPV*2417A**	1.02	0.92	59*N*A060V17**14
CSPH*2412A**	1.02	0.93	59*N*A060V17**14
CAP**2417A**	1.01	0.92	59*N*A080V17**14
CNPH*2417A**	1.01	0.92	59*N*A080V17**14
CNPV*1917A**	1.02	0.89	59*N*A080V17**14
CNPV*2417A**	1.01	0.92	59*N*A080V17**14
CSPH*2412A**	1.02	0.92	59*N*A080V17**14
CAP**1814A**	0.99	0.92	59*P5A040E14**10
CAP**2414A**	1.01	0.92	59*P5A040E14**10
CAP**2417A**	1.01	0.92	59*P5A040E14**10
CNPH*2417A**	1.01	0.93	59*P5A040E14**10
CNPV*1814A**	0.99	0.92	59*P5A040E14**10
CNPV*1917A**	1.02	0.92	59*P5A040E14**10
CNPV*2414A**	1.01	0.93	59*P5A040E14**10
CNPV*2417A**	1.01	0.93	59*P5A040E14**10
CSPH*2412A**	1.01	0.92	59*P5A040E14**10
CNPH*2417A**	1.01	0.90	OVLAAB036098
CNPV*1917A**	1.02	0.91	OVLAAB036098
CNPV*2417A**	1.01	0.90	OVLAAB036098
CSPH*2412A**	1.02	0.91	OVLAAB036098
CAP**2417A**	1.01	0.92	OVLAAB036098
CAP**2417A**	1.01	0.92	OVMAAB036098
CAP**2417A**	1.01	0.92	OVMAAB036098
CNPH*2417A**	1.02	0.91	OVMAAB036098
CNPV*1917A**	1.02	0.91	OVMAAB036098
CNPV*2417A**	1.02	0.91	OVMAAB036098
CSPH*2412A**	1.02	0.91	OVMAAB036098

See notes on page 74

DETAILED COOLING CAPACITIES# CONTINUED

EVAPORATOR AIR		CONDENSER ENTERING AIR TEMPERATURES °F (°C)																	
		75 (23.9)			85 (29.4)			95 (35)			105 (40.6)			115 (46.1)			125 (51.7)		
CFM	EWB °F (°C)	Capacity MBtuh		Total System KW**	Capacity MBtuh		Total System KW**	Capacity MBtuh		Total System KW**	Capacity MBtuh		Total System KW**	Capacity MBtuh		Total System KW**	Capacity MBtuh		Total System KW**
		Total	Sens‡		Total	Sens‡		Total	Sens‡		Total	Sens‡		Total	Sens‡		Total	Sens‡	
CA13NA024****(A,B) Outdoor Section With CAP**2414A** Indoor Section																			
700	72 (22.2)	27.09	13.27	1.65	25.82	12.82	1.85	24.63	12.41	2.06	23.42	12.00	2.30	22.08	11.54	2.56	20.57	11.04	2.84
	67 (19.4)	24.89	16.41	1.65	23.83	15.99	1.84	22.71	15.56	2.05	21.55	15.13	2.29	20.30	14.66	2.56	18.89	14.14	2.84
	63 (17.2)††	23.39	15.98	1.64	22.38	15.55	1.84	21.29	15.11	2.05	20.18	14.66	2.29	18.98	14.17	2.56	17.65	13.64	2.85
	62 (16.7)	23.01	19.56	1.64	22.03	19.14	1.84	20.99	18.67	2.05	19.94	18.19	2.29	18.91	18.91	2.56	17.82	17.82	2.84
	57 (13.9)	22.46	22.46	1.64	21.66	21.66	1.83	20.79	20.79	2.05	19.89	19.89	2.29	18.91	18.91	2.56	17.82	17.82	2.84
800	72 (22.2)	27.52	13.92	1.69	26.15	13.46	1.88	24.91	13.04	2.10	23.67	12.62	2.33	22.29	12.16	2.59	20.73	11.65	2.88
	67 (19.4)	25.25	17.44	1.68	24.16	17.03	1.88	23.00	16.60	2.09	21.82	16.16	2.33	20.53	15.69	2.59	19.09	15.16	2.88
	63 (17.2)††	23.76	16.95	1.68	22.72	16.53	1.87	21.60	16.08	2.09	20.46	15.63	2.33	19.22	15.14	2.59	17.86	14.60	2.88
	62 (16.7)	23.47	20.99	1.68	22.49	20.52	1.87	21.52	21.52	2.09	20.58	20.58	2.33	19.54	19.54	2.59	18.38	18.38	2.88
	57 (13.9)	23.30	23.30	1.68	22.44	22.44	1.87	21.53	21.53	2.09	20.58	20.58	2.33	19.54	19.54	2.59	18.38	18.38	2.88
900	72 (22.2)	27.79	14.53	1.73	26.41	14.07	1.92	25.10	13.63	2.13	23.83	13.21	2.37	22.42	12.76	2.63	20.83	12.24	2.91
	67 (19.4)	25.51	18.45	1.72	24.38	18.03	1.91	23.21	17.59	2.13	22.00	17.15	2.37	20.68	16.66	2.63	19.22	16.12	2.91
	63 (17.2)††	24.03	17.89	1.72	22.96	17.47	1.91	21.82	17.01	2.12	20.66	16.55	2.36	19.39	16.05	2.63	18.01	15.49	2.92
	62 (16.7)	23.97	23.97	1.72	23.07	23.07	1.91	22.11	22.11	2.12	21.12	21.12	2.36	20.03	20.03	2.63	18.82	18.82	2.91
	57 (13.9)	23.96	23.96	1.72	23.07	23.07	1.91	22.11	22.11	2.12	21.12	21.12	2.36	20.04	20.04	2.63	18.82	18.82	2.91

COOLING INDOOR MODEL	CAPACITY	POWER	FURNACE MODEL
*CAP**2414A**	1.00	1.00	
CAP**2417A**	1.00	1.00	
CAP**3014A**	1.01	1.01	
CAP**3017A**	1.01	1.01	
CAP**3617A**	1.01	1.01	
CAP**3619A**	1.01	1.01	
CAP**3621A**	1.02	1.02	
CNPH*2417A**	1.00	1.00	
CNPH*3017A**	1.01	1.01	
CNPH*3117A**	1.02	1.02	
CNPV*2414A**	1.00	1.00	
CNPV*2417A**	1.00	1.00	
CNPV*3014A**	1.01	1.01	
CNPV*3017A**	1.01	1.01	
CNPV*3117A**	1.02	1.02	
CSPH*2412A**	1.00	1.00	
CSPH*3012A**	1.01	1.01	
FB4CNF024	0.99	0.99	
FB4CNF024	0.99	0.95	
FB4CNF030	1.03	0.94	
FB4CNF030	1.02	0.93	
FE4AN(B,F)003	1.02	0.92	
FE4ANF002	0.98	0.90	
FE5ANB004	1.04	0.90	
FF1ENP024	0.98	0.98	
FF1ENP025	1.00	0.94	
FF1ENP030	1.00	1.01	
FF1ENP031	1.01	0.95	
FV4CN(B,F)003	1.02	0.92	
FV4CNF002	0.98	0.90	
FX4DN(B,F)031	1.03	0.98	
FX4DN(B,F)037	1.03	0.95	
FX4DNF025	1.02	0.93	
FY5BNF024	1.02	0.97	
FY5BNF030	1.03	1.03	

COOLING INDOOR MODEL	CAPACITY	POWER	FURNACE MODEL
CAP**2414A**	0.99	0.91	58CV(A,X)070 – 12
CAP**3014A**	1.00	0.92	58CV(A,X)070 – 12
CNPH*2417A**	0.99	0.93	58CV(A,X)070 – 12
CNPH*3017A**	1.00	0.92	58CV(A,X)070 – 12
CNPH*3117A**	1.02	0.93	58CV(A,X)070 – 12
CNPV*2414A**	0.99	0.93	58CV(A,X)070 – 12
CNPV*3014A**	1.00	0.92	58CV(A,X)070 – 12
CSPH*2412A**	1.00	0.92	58CV(A,X)070 – 12
CSPH*3012A**	1.00	0.92	58CV(A,X)070 – 12
CAP**2417A**	1.00	0.90	58CV(A,X)090 – 16
CAP**3017A**	1.01	0.91	58CV(A,X)090 – 16
CNPH*2417A**	0.99	0.91	58CV(A,X)090 – 16
CNPH*3017A**	1.01	0.91	58CV(A,X)090 – 16
CNPH*3117A**	1.02	0.93	58CV(A,X)090 – 16
CNPV*2417A**	0.99	0.91	58CV(A,X)090 – 16
CNPV*3017A**	1.01	0.91	58CV(A,X)090 – 16
CNPV*3117A**	1.02	0.93	58CV(A,X)090 – 16
CNPV*3117A**	1.03	0.93	58CV(A,X)090 – 16
CSPH*2412A**	1.01	0.92	58CV(A,X)090 – 16
CSPH*3012A**	1.01	0.91	58CV(A,X)090 – 16
CNPH*2417A**	0.99	0.93	58CV(A,X)110 – 20
CNPH*3017A**	1.01	0.91	58CV(A,X)110 – 20
CNPH*3117A**	1.02	0.93	58CV(A,X)110 – 20
CSPH*2412A**	1.01	0.92	58CV(A,X)110 – 20
CSPH*3012A**	1.01	0.91	58CV(A,X)110 – 20
CNPH*2417A**	0.99	0.91	58CV(A,X)135 – 22
CNPH*3017A**	1.01	0.91	58CV(A,X)135 – 22
CNPH*3117A**	1.02	0.93	58CV(A,X)135 – 22
CSPH*2412A**	1.01	0.92	58CV(A,X)135 – 22
CSPH*3012A**	1.01	0.91	58CV(A,X)135 – 22
CNPH*2417A**	0.99	0.91	58CV(A,X)155 – 22
CNPH*3017A**	1.01	0.91	58CV(A,X)155 – 22
CNPH*3117A**	1.02	0.93	58CV(A,X)155 – 22
CSPH*2412A**	1.01	0.92	58CV(A,X)155 – 22
CSPH*3012A**	1.01	0.91	58CV(A,X)155 – 22

COOLING INDOOR MODEL	CAPACITY	POWER	FURNACE MODEL
CAP**3619A**	1.02	0.97	58HDV040– –12
CNPH*2417A**	1.00	0.96	58HDV040– –12
CNPH*3017A**	1.03	0.96	58HDV040– –12
CNPH*3117A**	1.02	0.93	58HDV040– –12
CNPV*2417A**	1.00	0.96	58HDV040– –12
CNPV*3017A**	1.02	0.96	58HDV040– –12
CNPV*3117A**	1.03	0.95	58HDV040– –12
CSPH*2412A**	1.00	0.96	58HDV040– –12
CSPH*3012A**	1.02	0.97	58HDV040– –12
CAP**3619A**	1.02	0.97	58HDV060– –12
CNPH*2417A**	1.01	0.96	58HDV060– –12
CNPH*3017A**	1.03	0.96	58HDV060– –12
CNPH*3117A**	1.02	0.93	58HDV060– –12
CNPV*3017A**	1.03	0.96	58HDV060– –12
CNPV*3117A**	1.04	0.96	58HDV060– –12
CNPV*3117A**	1.05	0.96	58HDV060– –12
CSPH*2412A**	1.00	0.96	58HDV060– –12
CSPH*3012A**	1.02	0.97	58HDV060– –12
CNPH*2417A**	1.02	0.96	58HDV080– –20
CNPH*3017A**	1.04	0.96	58HDV080– –20
CNPH*3117A**	1.04	0.94	58HDV080– –20
CSPH*2412A**	1.00	0.96	58HDV080– –20
CSPH*3012A**	1.02	0.97	58HDV080– –20
CNPH*2417A**	1.02	0.96	58HDV100– –20
CNPH*3017A**	1.03	0.95	58HDV100– –20
CNPH*3117A**	1.02	0.93	58HDV100– –20
CSPH*2412A**	1.00	0.96	58HDV100– –20
CSPH*3012A**	1.02	0.97	58HDV100– –20
CAP**2417A**	1.02	0.92	58ME(B,C)040–12
CAP**3017A**	1.03	0.93	58ME(B,C)040–12
CNPH*2417A**	1.01	0.92	58ME(B,C)040–12
CNPH*3017A**	1.03	0.93	58ME(B,C)040–12
CNPV*2417A**	1.01	0.92	58ME(B,C)040–12
CNPV*3017A**	1.03	0.93	58ME(B,C)040–12
CSPH*2412A**	1.02	0.92	58ME(B,C)040–12

DETAILED COOLING CAPACITIES# CONTINUED

CA13NA024**A,B Outdoor Section With CAP**2414** Indoor Section**

COOLING INDOOR MODEL	CAPACITY	POWER	FURNACE MODEL
CSPH*3012A**	1.03	0.93	58ME(B,C)040–12
CAP**2417A**	1.02	0.92	58ME(B,C)060–12
CAP**3017A**	1.03	0.93	58ME(B,C)060–12
CNPH*2417A**	1.01	0.92	58ME(B,C)060–12
CNPH*3017A**	1.03	0.93	58ME(B,C)060–12
CNPV*2417A**	1.01	0.92	58ME(B,C)060–12
CNPV*3017A**	1.03	0.93	58ME(B,C)060–12
CSPH*2412A**	1.02	0.92	58ME(B,C)060–12
CSPH*3012A**	1.03	0.93	58ME(B,C)060–12
CAP**2417A**	1.01	0.91	58ME(B,C)080–12
CAP**3017A**	1.03	0.93	58ME(B,C)080–12
CNPH*2417A**	1.01	0.92	58ME(B,C)080–12
CNPH*3017A**	1.03	0.93	58ME(B,C)080–12
CNPV*2417A**	1.01	0.92	58ME(B,C)080–12
CNPV*3017A**	1.03	0.93	58ME(B,C)080–12
CSPH*2412A**	1.02	0.92	58ME(B,C)080–12
CSPH*3012A**	1.03	0.93	58ME(B,C)080–12
CAP**2417A**	1.02	0.92	58MEB040–12
CAP**3017A**	1.03	0.93	58MEB040–12
CNPH*2417A**	1.01	0.92	58MEB040–12
CNPH*3017A**	1.03	0.93	58MEB040–12
CNPH*3117A**	1.02	0.93	58MEB040–12
CNPV*2417A**	1.01	0.92	58MEB040–12
CNPV*3017A**	1.03	0.93	58MEB040–12
CNPV*3117A**	1.02	0.93	58MEB040–12
CSPH*2412A**	1.02	0.92	58MEB040–12
CSPH*3012A**	1.03	0.93	58MEB040–12
CNPH*3117A**	1.02	0.93	58MEC060–12
CNPV*3117A**	1.02	0.93	58MEC060–12
CNPH*3117A**	1.02	0.93	58MEC080–12
CNPV*3117A**	1.02	0.93	58MEC080–12
CAP**2417A**	1.01	0.91	58MV(B,C)060–14
CAP**3017A**	1.02	0.92	58MV(B,C)060–14
CNPH*2417A**	1.01	0.92	58MV(B,C)060–14
CNPH*3017A**	1.02	0.92	58MV(B,C)060–14
CNPH*3117A**	1.02	0.93	58MV(B,C)060–14
CNPV*2417A**	1.01	0.92	58MV(B,C)060–14
CNPV*3017A**	1.02	0.92	58MV(B,C)060–14
CNPV*3117A**	1.02	0.93	58MV(B,C)060–14
CSPH*2412A**	1.02	0.93	58MV(B,C)060–14
CSPH*3012A**	1.03	0.93	58MV(B,C)060–14
CAP**3621A**	1.00	0.92	58MV(B,C)080–14
CNPH*2417A**	0.99	0.91	58MV(B,C)080–14
CNPH*3017A**	1.01	0.91	58MV(B,C)080–14
CNPH*3117A**	1.02	0.93	58MV(B,C)080–14
CNPV*3621A**	1.00	0.92	58MV(B,C)080–14
CSPH*2412A**	1.00	0.92	58MV(B,C)080–14
CSPH*3012A**	1.01	0.91	58MV(B,C)080–14
CNPH*2417A**	0.98	0.90	58MV(B,C)080–20
CNPH*3017A**	1.00	0.90	58MV(B,C)080–20
CNPH*3117A**	1.02	0.93	58MV(B,C)080–20
CSPH*2412A**	1.00	0.92	58MV(B,C)080–20
CSPH*3012A**	1.00	0.90	58MV(B,C)080–20
CNPH*2417A**	0.99	0.91	58MV(B,C)100–20
CNPH*3017A**	1.01	0.91	58MV(B,C)100–20
CNPH*3117A**	1.02	0.93	58MV(B,C)100–20

COOLING INDOOR MODEL	CAPACITY	POWER	FURNACE MODEL
CSPH*2412A**	1.01	0.92	58MV(B,C)100–20
CSPH*3012A**	1.01	0.91	58MV(B,C)100–20
CNPH*2417A**	1.00	0.92	58MV(B,C)120–20
CNPH*3017A**	1.01	0.91	58MV(B,C)120–20
CNPH*3117A**	1.02	0.93	58MV(B,C)120–20
CSPH*2412A**	1.01	0.92	58MV(B,C)120–20
CSPH*3012A**	1.02	0.92	58MV(B,C)120–20
CNPH*2417A**	0.99	0.93	58MVB040–14
CNPH*3017A**	1.01	0.91	58MVB040–14
CNPH*3117A**	1.02	0.93	58MVB040–14
CSPH*2412A**	1.01	0.92	58MVB040–14
CSPH*3012A**	1.01	0.91	58MVB040–14
CAP**2414A**	1.00	0.94	58PH*045–08
CAP**3014A**	1.02	0.93	58PH*045–08
CAP**3617A**	1.02	0.92	58PH*045–08
CNPH*2417A**	1.00	0.94	58PH*045–08
CNPH*3017A**	1.02	0.93	58PH*045–08
CNPH*3117A**	1.02	0.93	58PH*045–08
CNPV*2414A**	1.00	0.94	58PH*045–08
CNPV*3014A**	1.01	0.92	58PH*045–08
CNPV*3617A**	1.02	0.92	58PH*045–08
CSPH*2412A**	1.01	0.92	58PH*045–08
CSPH*3012A**	1.02	0.93	58PH*045–08
CAP**2417A**	1.01	0.91	58UVB060–14
CAP**3017A**	1.02	0.92	58UVB060–14
CNPV*2417A**	1.01	0.92	58UVB060–14
CNPV*3017A**	1.02	0.92	58UVB060–14
CNPV*3117A**	1.02	0.93	58UVB060–14
CAP**3621A**	1.00	0.92	58UVB080–14
CNPV*3621A**	1.00	0.92	58UVB080–14
CAP**2417A**	1.01	0.92	58VLR105–12
CAP**3017A**	1.02	0.93	58VLR105–12
CNPH*2417A**	1.01	0.92	58VLR105–12
CNPH*3017A**	1.02	0.93	58VLR105–12
CNPH*3117A**	1.03	0.95	58VLR105–12
CNPV*2417A**	1.01	0.92	58VLR105–12
CNPV*3017A**	1.02	0.93	58VLR105–12
CNPV*3117A**	1.03	0.95	58VLR105–12
CSPH*2412A**	1.02	0.93	58VLR105–12
CSPH*3012A**	1.02	0.93	58VLR105–12
CAP**2417A**	0.99	0.91	58VMR105–12
CAP**3017A**	1.01	0.92	58VMR105–12
CNPH*2417A**	0.99	0.93	58VMR105–12
CNPH*3017A**	1.01	0.92	58VMR105–12
CNPH*3117A**	1.03	0.94	58VMR105–12
CNPV*2417A**	0.99	0.93	58VMR105–12
CNPV*3017A**	1.01	0.92	58VMR105–12
CNPV*3117A**	1.03	0.94	58VMR105–12
CSPH*2412A**	1.00	0.94	58VMR105–12
CSPH*3012A**	1.01	0.92	58VMR105–12
CAP**2417A**	1.00	0.92	59*N*A060V17**14
CAP**3017A**	1.01	0.92	59*N*A060V17**14
CAP**3621A**	1.01	0.92	59*N*A060V17**14
CNPH*2417A**	0.99	0.92	59*N*A060V17**14
CNPH*3017A**	1.01	0.92	59*N*A060V17**14
CNPH*3117A**	1.03	0.94	59*N*A060V17**14

COOLING INDOOR MODEL	CAPACITY	POWER	FURNACE MODEL
CNPV*2417A**	0.99	0.92	59*N*A060V17**14
CNPV*3017A**	1.01	0.92	59*N*A060V17**14
CNPV*3117A**	1.03	0.94	59*N*A060V17**14
CNPV*3621A**	1.01	0.92	59*N*A060V17**14
CSPH*2412A**	1.01	0.94	59*N*A060V17**14
CSPH*3012A**	1.01	0.92	59*N*A060V17**14
CAP**2417A**	0.99	0.91	59*N*A080V17**14
CAP**3017A**	1.00	0.92	59*N*A080V17**14
CAP**3621A**	1.01	0.92	59*N*A080V17**14
CNPH*2417A**	0.99	0.91	59*N*A080V17**14
CNPH*3017A**	1.00	0.92	59*N*A080V17**14
CNPH*3117A**	1.02	0.90	59*N*A080V17**14
CNPV*2417A**	0.99	0.91	59*N*A080V17**14
CNPV*3017A**	1.00	0.92	59*N*A080V17**14
CNPV*3117A**	1.02	0.90	59*N*A080V17**14
CNPV*3621A**	1.00	0.92	59*N*A080V17**14
CSPH*2412A**	1.00	0.92	59*N*A080V17**14
CSPH*3012A**	1.01	0.92	59*N*A080V17**14
CAP**3621A**	1.02	0.93	59*N*A100V21**20
CNPH*2417A**	1.01	0.92	59*N*A100V21**20
CNPH*3017A**	1.02	0.93	59*N*A100V21**20
CNPH*3117A**	1.03	0.91	59*N*A100V21**20
CNPV*3621A**	1.02	0.93	59*N*A100V21**20
CSPH*2412A**	1.02	0.93	59*N*A100V21**20
CSPH*3012A**	1.02	0.93	59*N*A100V21**20
CNPH*2417A**	1.00	0.92	59*N*A120V24**22
CNPH*3017A**	1.02	0.93	59*N*A120V24**22
CNPH*3117A**	1.03	0.91	59*N*A120V24**22
CSPH*2412A**	1.02	0.93	59*N*A120V24**22
CSPH*3012A**	1.02	0.93	59*N*A120V24**22
CAP**2414A**	1.00	1.00	59*P5A040E14**10
CAP**2417A**	1.00	1.00	59*P5A040E14**10
CAP**3014A**	1.01	0.99	59*P5A040E14**10
CAP**3017A**	1.02	1.00	59*P5A040E14**10
CNPH*2417A**	1.00	1.00	59*P5A040E14**10
CNPH*3017A**	1.02	1.00	59*P5A040E14**10
CNPH*3117A**	1.03	1.00	59*P5A040E14**10
CNPV*2414A**	1.00	1.00	59*P5A040E14**10
CNPV*2417A**	1.00	1.00	59*P5A040E14**10
CNPV*3014A**	1.01	0.99	59*P5A040E14**10
CNPV*3017A**	1.02	1.00	59*P5A040E14**10
CNPV*3117A**	1.03	1.00	59*P5A040E14**10
CSPH*2412A**	1.01	0.99	59*P5A040E14**10
CSPH*3012A**	1.02	1.00	59*P5A040E14**10
CAP**2417A**	1.00	0.92	59*P5A060E17**14
CAP**3017A**	1.01	0.92	59*P5A060E17**14
CNPH*2417A**	0.99	0.91	59*P5A060E17**14
CNPH*3017A**	1.01	0.92	59*P5A060E17**14
CNPH*3117A**	1.03	0.91	59*P5A060E17**14
CNPV*2417A**	0.99	0.91	59*P5A060E17**14
CNPV*3017A**	1.01	0.92	59*P5A060E17**14
CNPV*3117A**	1.03	0.91	59*P5A060E17**14
CSPH*2412A**	1.00	0.92	59*P5A060E17**14
CSPH*3012A**	1.01	0.92	59*P5A060E17**14
CAP**2417A**	1.01	0.95	OVLAAB036098
CAP**3017A**	1.02	0.93	OVLAAB036098

DETAILED COOLING CAPACITIES# CONTINUED

CA13NA024**A,B Outdoor Section With CAP**2414** Indoor Section**

COOLING INDOOR MODEL	CAPACITY	POWER	FURNACE MODEL
CNPH*2417A**	1.00	0.94	OVLAAB036098
CNPH*3017A**	1.02	0.93	OVLAAB036098
CNPH*3117A**	1.03	0.93	OVLAAB036098
CNPV*2417A**	1.00	0.94	OVLAAB036098
CNPV*3017A**	1.02	0.93	OVLAAB036098
CNPV*3117A**	1.03	0.93	OVLAAB036098
CSPH*2412A**	1.02	0.96	OVLAAB036098
CSPH*3012A**	1.02	0.93	OVLAAB036098
CAP**2417A**	1.01	0.95	OVLAAB036098
CAP**3017A**	1.02	0.93	OVLAAB036098
CAP**2417A**	1.01	0.95	OVMAAB036098
CAP**3017A**	1.02	0.93	OVMAAB036098
CNPH*2417A**	1.00	0.94	OVMAAB036098
CNPH*3017A**	1.02	0.93	OVMAAB036098
CNPH*3117A**	1.03	0.93	OVMAAB036098
CNPV*2417A**	1.00	0.94	OVMAAB036098
CNPV*3017A**	1.02	0.93	OVMAAB036098
CNPV*3117A**	1.03	0.93	OVMAAB036098
CSPH*2412A**	1.02	0.96	OVMAAB036098
CSPH*3012A**	1.02	0.93	OVMAAB036098
CAP**2417A**	1.00	0.92	OVMAAB042112
CAP**3017A**	1.01	0.92	OVMAAB042112
CNPH*2417A**	1.00	0.92	OVMAAB042112
CNPH*3017A**	1.01	0.91	OVMAAB042112
CNPH*3117A**	1.03	0.93	OVMAAB042112
CNPV*2417A**	1.00	0.94	OVMAAB042112
CNPV*3017A**	1.01	0.91	OVMAAB042112
CNPV*3117A**	1.03	0.93	OVMAAB042112
CSPH*2412A**	1.01	0.92	OVMAAB042112
CSPH*3012A**	1.02	0.92	OVMAAB042112

See notes on page 74

DETAILED COOLING CAPACITIES# CONTINUED

EVAPORATOR AIR		CONDENSER ENTERING AIR TEMPERATURES °F (°C)																	
		75 (23.9)			85 (29.4)			95 (35)			105 (40.6)			115 (46.1)			125 (51.7)		
CFM	EWB °F (°C)	Capacity MBtuh		Total System KW**	Capacity MBtuh		Total System KW**	Capacity MBtuh		Total System KW**	Capacity MBtuh		Total System KW**	Capacity MBtuh		Total System KW**	Capacity MBtuh		Total System KW**
		Total	Sens‡		Total	Sens‡		Total	Sens‡		Total	Sens‡		Total	Sens‡		Total	Sens‡	
CA13NA030****(A,B) Outdoor Section With CAP**3014A** Indoor Section																			
875	72 (22.2)	32.18	16.57	2.04	30.84	16.09	2.25	29.42	15.59	2.49	27.93	15.07	2.76	26.28	14.50	3.05	24.43	13.86	3.36
	67 (19.4)	29.70	20.70	2.03	28.44	20.20	2.25	27.08	19.68	2.49	25.67	19.13	2.75	24.11	18.54	3.04	22.39	17.88	3.35
	63 (17.2)††	27.91	20.13	2.03	26.69	19.62	2.25	25.39	19.07	2.49	24.02	18.50	2.75	22.52	17.88	3.04	20.88	17.21	3.35
	62 (16.7)	27.50	24.80	2.03	26.34	24.26	2.25	25.11	23.67	2.49	23.94	23.94	2.75	22.71	22.71	3.04	21.35	21.35	3.35
	57 (13.9)	27.10	27.10	2.03	26.12	26.12	2.25	25.05	25.05	2.49	23.94	23.94	2.75	22.71	22.71	3.04	21.35	21.35	3.35
1000	72 (22.2)	32.58	17.38	2.08	31.18	16.89	2.30	29.72	16.38	2.54	28.19	15.86	2.81	26.50	15.29	3.09	24.59	14.65	3.40
	67 (19.4)	30.08	22.03	2.08	28.79	21.53	2.30	27.40	21.00	2.54	25.96	20.45	2.80	24.36	19.85	3.09	22.60	19.17	3.40
	63 (17.2)††	28.31	21.38	2.08	27.06	20.87	2.30	25.72	20.31	2.53	24.32	19.74	2.80	22.78	19.11	3.09	21.11	18.42	3.40
	62 (16.7)	28.07	27.82	2.08	27.00	27.00	2.29	25.89	25.89	2.53	24.72	24.72	2.80	23.42	23.42	3.09	21.98	21.98	3.40
	57 (13.9)	28.04	28.04	2.08	27.01	27.01	2.29	25.89	25.89	2.53	24.72	24.72	2.80	23.42	23.42	3.09	21.98	21.98	3.40
1125	72 (22.2)	32.83	18.14	2.13	31.40	17.65	2.35	29.91	17.14	2.59	28.35	16.62	2.85	26.63	16.04	3.14	24.68	15.40	3.45
	67 (19.4)	30.36	23.30	2.13	29.03	22.80	2.34	27.62	22.26	2.58	26.15	21.70	2.85	24.54	21.08	3.14	22.76	20.38	3.45
	63 (17.2)††	28.59	22.57	2.12	27.32	22.05	2.34	25.95	21.49	2.58	24.53	20.90	2.85	22.98	20.26	3.13	21.29	19.53	3.44
	62 (16.7)	28.79	28.79	2.12	27.71	27.71	2.34	26.54	26.54	2.58	25.33	25.33	2.85	23.98	23.98	3.13	22.47	22.47	3.44
	57 (13.9)	28.79	28.79	2.12	27.71	27.71	2.34	26.55	26.55	2.58	25.33	25.33	2.85	23.98	23.98	3.13	22.47	22.47	3.44

COOLING INDOOR MODEL	CAPACITY	POWER	FURNACE MODEL
*CAP**3014A**	1.00	1.00	
CAP**3017A**	1.00	1.00	
CAP**3614A**	1.00	1.00	
CAP**3617A**	1.01	1.01	
CAP**3619A**	1.01	1.01	
CAP**3621A**	1.01	1.01	
CAP**4221A**	1.01	1.00	
CAP**4224A**	1.01	1.00	
CAP**4823A**	1.01	1.01	
CNPH*3017A**	1.00	1.00	
CNPH*3117A**	1.01	1.00	
CNPH*3617A**	1.00	1.00	
CNPH*4221A**	1.01	0.99	
CNPV*3014A**	1.00	1.00	
CNPV*3017A**	1.00	1.00	
CNPV*3117A**	1.01	1.00	
CNPV*3617A**	1.00	1.00	
CNPV*3621A**	1.00	1.00	
CNPV*3717A**	1.02	1.01	
CNPV*4217A**	1.01	0.99	
CNPV*4221A**	1.01	0.99	
CSPH*3012A**	1.00	1.00	
CSPH*3612A**	1.00	1.00	
CSPH*4212A**	1.01	0.99	
FB4CNF030	1.00	0.99	
FB4CNF030	1.00	0.94	
FB4CNF036	1.00	0.99	
FB4CNF036	1.00	0.94	
FB4CNF042	1.02	0.99	
FE4AN(B,F)003	1.01	0.90	
FE4AN(B,F)005	1.04	0.92	
FE4ANF002	1.01	0.93	
FE5ANB004	1.04	0.91	
FF1ENP030	0.99	1.01	
FF1ENP031	1.01	0.93	

COOLING INDOOR MODEL	CAPACITY	POWER	FURNACE MODEL
FF1ENP036	1.00	1.00	
FF1ENP037	1.01	0.96	
FV4CN(B,F)003	1.01	0.90	
FV4CN(B,F)005	1.04	0.92	
FV4CNF002	0.98	0.91	
FX4DN(B,F)031	1.01	0.96	
FX4DN(B,F)037	1.02	0.92	
FX4DN(B,F)043	1.02	1.01	
FY5BNF030	1.01	0.99	
FY5BNF036	1.01	0.99	
CAP**3014A**	0.99	0.92	58CV(A,X)070–12
CAP**3614A**	1.00	0.93	58CV(A,X)070–12
CNPH*3017A**	0.99	0.92	58CV(A,X)070–12
CNPH*3117A**	1.01	0.92	58CV(A,X)070–12
CNPH*3617A**	1.00	0.93	58CV(A,X)070–12
CNPV*3014A**	0.99	0.92	58CV(A,X)070–12
CSPH*3012A**	0.99	0.92	58CV(A,X)070–12
CSPH*3612A**	1.01	0.92	58CV(A,X)070–12
CAP**3017A**	1.00	0.90	58CV(A,X)090–16
CAP**3617A**	1.00	0.90	58CV(A,X)090–16
CNPH*3017A**	1.00	0.93	58CV(A,X)090–16
CNPH*3117A**	1.01	0.92	58CV(A,X)090–16
CNPH*3617A**	1.00	0.93	58CV(A,X)090–16
CNPV*3017A**	1.00	0.93	58CV(A,X)090–16
CNPV*3117A**	1.01	0.92	58CV(A,X)090–16
CNPV*3617A**	1.00	0.93	58CV(A,X)090–16
CNPV*3717A**	1.02	0.92	58CV(A,X)090–16
CNPV*4217A**	1.01	0.90	58CV(A,X)090–16
CSPH*3012A**	1.00	0.93	58CV(A,X)090–16
CSPH*3612A**	1.01	0.92	58CV(A,X)090–16
CAP**3621A**	1.01	0.91	58CV(A,X)110–20
CNPH*3017A**	1.00	0.93	58CV(A,X)110–20
CNPH*3117A**	1.01	0.92	58CV(A,X)110–20
CNPH*3617A**	1.00	0.93	58CV(A,X)110–20
CNPV*3621A**	1.00	0.93	58CV(A,X)110–20

COOLING INDOOR MODEL	CAPACITY	POWER	FURNACE MODEL
CSPH*3012A**	1.01	0.93	58CV(A,X)110–20
CSPH*3612A**	1.01	0.92	58CV(A,X)110–20
CNPH*3017A**	1.00	0.90	58CV(A,X)135–22
CNPH*3117A**	1.01	0.92	58CV(A,X)135–22
CNPH*3617A**	1.00	0.90	58CV(A,X)135–22
CSPH*3012A**	1.01	0.93	58CV(A,X)135–22
CSPH*3612A**	1.01	0.92	58CV(A,X)135–22
CNPH*3017A**	1.00	0.90	58CV(A,X)155–22
CNPH*3117A**	1.01	0.92	58CV(A,X)155–22
CNPH*3617A**	1.00	0.90	58CV(A,X)155–22
CSPH*3012A**	1.01	0.91	58CV(A,X)155–22
CSPH*3612A**	1.01	0.92	58CV(A,X)155–22
CAP**3619A**	1.01	0.99	58HDV040––12
CNPH*3017A**	1.00	0.99	58HDV040––12
CNPH*3117A**	1.01	0.96	58HDV040––12
CNPH*3617A**	1.00	0.99	58HDV040––12
CNPV*3017A**	1.00	0.99	58HDV040––12
CNPV*3117A**	1.02	0.96	58HDV040––12
CNPV*3617A**	1.00	0.99	58HDV040––12
CNPV*3621A**	1.00	0.99	58HDV040––12
CNPV*3717A**	1.04	0.98	58HDV040––12
CSPH*3012A**	1.00	0.99	58HDV040––12
CSPH*3612A**	1.01	0.96	58HDV040––12
CAP**3619A**	1.01	0.99	58HDV060––12
CNPH*3017A**	1.01	0.99	58HDV060––12
CNPH*3117A**	1.01	0.96	58HDV060––12
CNPH*3617A**	1.01	0.99	58HDV060––12
CNPV*3017A**	1.01	0.99	58HDV060––12
CNPV*3117A**	1.03	0.97	58HDV060––12
CNPV*3617A**	1.01	0.99	58HDV060––12
CNPV*3621A**	1.01	0.99	58HDV060––12
CNPV*3717A**	1.04	0.97	58HDV060––12
CSPH*3012A**	1.00	0.99	58HDV060––12
CSPH*3612A**	1.01	0.96	58HDV060––12
CAP**4823A**	1.01	0.91	58HDV080––20

DETAILED COOLING CAPACITIES# CONTINUED

CA13NA030**A,B Outdoor Section With CAP**3014** Indoor Section**

COOLING INDOOR MODEL	CAPACITY	POWER	FURNACE MODEL
CNPH*3017A**	1.01	0.96	58HDV080––20
CNPH*3117A**	1.01	0.96	58HDV080––20
CNPH*3617A**	1.01	0.96	58HDV080––20
CNPV*3621A**	1.01	0.96	58HDV080––20
CSPH*3012A**	1.00	0.94	58HDV080––20
CSPH*3612A**	1.01	0.92	58HDV080––20
CNPH*3017A**	1.01	0.93	58HDV100––20
CNPH*3117A**	1.01	0.96	58HDV100––20
CNPH*3617A**	1.01	0.93	58HDV100––20
CSPH*3012A**	1.00	0.94	58HDV100––20
CSPH*3612A**	1.01	0.92	58HDV100––20
CAP**3017A**	1.01	0.91	58ME(B,C)040–12
CAP**3617A**	1.01	0.92	58ME(B,C)040–12
CNPH*3017A**	1.01	0.91	58ME(B,C)040–12
CNPH*3617A**	0.99	0.90	58ME(B,C)040–12
CNPV*3017A**	1.01	0.91	58ME(B,C)040–12
CNPV*3617A**	0.99	0.90	58ME(B,C)040–12
CSPH*3012A**	1.01	0.92	58ME(B,C)040–12
CSPH*3612A**	1.00	0.90	58ME(B,C)040–12
CAP**3017A**	1.01	0.94	58ME(B,C)060–12
CAP**3617A**	1.01	0.91	58ME(B,C)060–12
CNPH*3017A**	1.01	0.94	58ME(B,C)060–12
CNPH*3617A**	0.99	0.90	58ME(B,C)060–12
CNPV*3017A**	1.01	0.94	58ME(B,C)060–12
CNPV*3617A**	0.99	0.90	58ME(B,C)060–12
CSPH*3012A**	1.01	0.94	58ME(B,C)060–12
CSPH*3612A**	1.00	0.90	58ME(B,C)060–12
CAP**3017A**	1.01	0.91	58ME(B,C)080–12
CAP**3617A**	1.01	0.91	58ME(B,C)080–12
CNPH*3017A**	1.01	0.91	58ME(B,C)080–12
CNPH*3617A**	0.99	0.89	58ME(B,C)080–12
CNPV*3017A**	1.01	0.91	58ME(B,C)080–12
CNPV*3617A**	0.99	0.89	58ME(B,C)080–12
CSPH*3012A**	1.01	0.93	58ME(B,C)080–12
CSPH*3612A**	1.00	0.90	58ME(B,C)080–12
CAP**3017A**	1.01	0.94	58ME(B,C)080–16
CAP**3617A**	1.02	0.95	58ME(B,C)080–16
CNPH*3017A**	1.01	0.94	58ME(B,C)080–16
CNPH*3617A**	1.01	0.94	58ME(B,C)080–16
CNPV*3017A**	1.01	0.94	58ME(B,C)080–16
CNPV*3617A**	1.01	0.94	58ME(B,C)080–16
CSPH*3012A**	1.01	0.94	58ME(B,C)080–16
CSPH*3612A**	1.01	0.92	58ME(B,C)080–16
CAP**3017A**	1.01	0.91	58MEB040–12
CAP**3617A**	1.01	0.92	58MEB040–12
CNPH*3017A**	1.01	0.91	58MEB040–12
CNPH*3117A**	1.01	0.92	58MEB040–12
CNPH*3617A**	0.99	0.90	58MEB040–12
CNPV*3017A**	1.01	0.91	58MEB040–12
CNPV*3117A**	1.01	0.92	58MEB040–12
CNPV*3617A**	0.99	0.90	58MEB040–12
CNPV*3717A**	1.02	0.92	58MEB040–12
CSPH*3012A**	1.01	0.92	58MEB040–12
CSPH*3612A**	1.00	0.90	58MEB040–12
CNPH*3117A**	1.01	0.92	58MEC060–12
CNPV*3117A**	1.01	0.92	58MEC060–12

COOLING INDOOR MODEL	CAPACITY	POWER	FURNACE MODEL
CNPV*3717A**	1.02	0.92	58MEC060–12
CNPH*3117A**	1.01	0.92	58MEC080–12
CNPV*3117A**	1.01	0.92	58MEC080–12
CNPV*3717A**	1.02	0.92	58MEC080–12
CNPH*3117A**	1.01	0.92	58MEC080–16
CNPV*3117A**	1.01	0.92	58MEC080–16
CNPV*3717A**	1.02	0.92	58MEC080–16
CAP**3017A**	1.00	0.93	58MV(B,C)060–14
CAP**3617A**	1.01	0.91	58MV(B,C)060–14
CNPH*3017A**	1.01	0.93	58MV(B,C)060–14
CNPH*3117A**	1.01	0.92	58MV(B,C)060–14
CNPH*3617A**	1.01	0.93	58MV(B,C)060–14
CNPV*3017A**	1.01	0.93	58MV(B,C)060–14
CNPV*3117A**	1.01	0.92	58MV(B,C)060–14
CNPV*3617A**	1.01	0.93	58MV(B,C)060–14
CNPV*3717A**	1.02	0.92	58MV(B,C)060–14
CSPH*3012A**	1.01	0.93	58MV(B,C)060–14
CSPH*3612A**	1.02	0.92	58MV(B,C)060–14
CAP**3621A**	1.00	0.93	58MV(B,C)080–14
CNPH*3017A**	0.99	0.92	58MV(B,C)080–14
CNPH*3117A**	1.01	0.92	58MV(B,C)080–14
CNPH*3617A**	0.99	0.92	58MV(B,C)080–14
CNPV*3621A**	0.99	0.92	58MV(B,C)080–14
CSPH*3012A**	1.00	0.93	58MV(B,C)080–14
CSPH*3612A**	1.01	0.92	58MV(B,C)080–14
CAP**3621A**	1.00	0.90	58MV(B,C)080–20
CNPH*3017A**	1.00	0.93	58MV(B,C)080–20
CNPH*3117A**	1.01	0.92	58MV(B,C)080–20
CNPH*3617A**	1.00	0.93	58MV(B,C)080–20
CNPV*3621A**	1.00	0.93	58MV(B,C)080–20
CSPH*3012A**	1.00	0.93	58MV(B,C)080–20
CSPH*3612A**	1.01	0.92	58MV(B,C)080–20
CAP**3621A**	0.99	0.92	58MV(B,C)100–20
CNPH*3017A**	0.99	0.92	58MV(B,C)100–20
CNPH*3117A**	1.01	0.92	58MV(B,C)100–20
CNPH*3617A**	0.99	0.92	58MV(B,C)100–20
CNPV*3621A**	0.99	0.92	58MV(B,C)100–20
CSPH*3012A**	0.99	0.92	58MV(B,C)100–20
CSPH*3612A**	1.01	0.91	58MV(B,C)100–20
CNPH*3017A**	1.00	0.90	58MV(B,C)120–20
CNPH*3117A**	1.01	0.92	58MV(B,C)120–20
CNPH*3617A**	1.00	0.90	58MV(B,C)120–20
CSPH*3012A**	1.01	0.93	58MV(B,C)120–20
CSPH*3612A**	1.02	0.92	58MV(B,C)120–20
CNPH*3017A**	1.00	0.93	58MVB040–14
CNPH*3117A**	1.01	0.92	58MVB040–14
CNPH*3617A**	1.00	0.93	58MVB040–14
CSPH*3012A**	1.00	0.93	58MVB040–14
CSPH*3612A**	1.01	0.92	58MVB040–14
CAP**3017A**	1.00	0.93	58PH*070–16
CAP**3617A**	1.01	0.93	58PH*070–16
CNPH*3017A**	1.00	0.94	58PH*070–16
CNPH*3117A**	1.01	0.96	58PH*070–16
CNPH*3617A**	1.00	0.94	58PH*070–16
CNPV*3017A**	1.00	0.94	58PH*070–16
CNPV*3117A**	1.01	0.96	58PH*070–16

COOLING INDOOR MODEL	CAPACITY	POWER	FURNACE MODEL
CNPV*3617A**	1.00	0.94	58PH*070–16
CNPV*3717A**	1.02	0.92	58PH*070–16
CSPH*3012A**	1.01	0.95	58PH*070–16
CSPH*3612A**	1.01	0.94	58PH*070–16
CAP**3621A**	1.01	0.92	58PH*090–16
CNPH*3017A**	1.01	0.93	58PH*090–16
CNPH*3117A**	1.01	0.92	58PH*090–16
CNPH*3617A**	1.01	0.93	58PH*090–16
CNPV*3621A**	1.01	0.93	58PH*090–16
CNPV*4821A**	1.04	0.92	58PH*090–16
CSPH*3012A**	1.01	0.93	58PH*090–16
CSPH*3612A**	1.01	0.92	58PH*090–16
CAP**3017A**	1.00	0.93	58UVB060–14
CAP**3617A**	1.01	0.91	58UVB060–14
CNPV*3017A**	1.01	0.93	58UVB060–14
CNPV*3117A**	1.01	0.92	58UVB060–14
CNPV*3617A**	1.01	0.93	58UVB060–14
CNPV*3717A**	1.02	0.92	58UVB060–14
CAP**3621A**	1.00	0.93	58UVB080–14
CNPV*3621A**	0.99	0.92	58UVB080–14
CAP**3621A**	1.00	0.90	58UVB080–20
CNPV*3621A**	1.00	0.93	58UVB080–20
CAP**3621A**	0.99	0.92	58UVB100–20
CNPV*3621A**	0.99	0.92	58UVB100–20
CAP**3017A**	1.00	0.94	58VLR105–12
CAP**3617A**	1.01	0.93	58VLR105–12
CNPH*3017A**	1.01	0.93	58VLR105–12
CNPH*3117A**	1.03	0.93	58VLR105–12
CNPH*3617A**	1.01	0.93	58VLR105–12
CNPV*3017A**	1.01	0.93	58VLR105–12
CNPV*3117A**	1.02	0.92	58VLR105–12
CNPV*3617A**	1.01	0.93	58VLR105–12
CNPV*3717A**	1.04	0.94	58VLR105–12
CSPH*3012A**	1.01	0.93	58VLR105–12
CSPH*3612A**	1.02	0.92	58VLR105–12
CAP**3017A**	0.99	0.94	58VMR105–12
CAP**3617A**	0.99	0.92	58VMR105–12
CNPH*3017A**	0.99	0.92	58VMR105–12
CNPH*3117A**	1.01	0.92	58VMR105–12
CNPH*3617A**	0.99	0.92	58VMR105–12
CNPV*3017A**	0.99	0.92	58VMR105–12
CNPV*3117A**	1.01	0.92	58VMR105–12
CNPV*3617A**	0.99	0.92	58VMR105–12
CNPV*3717A**	1.02	0.92	58VMR105–12
CSPH*3012A**	0.99	0.92	58VMR105–12
CSPH*3612A**	1.01	0.91	58VMR105–12
CAP**3017A**	0.99	0.94	59*N*A060V17**14
CAP**3617A**	1.00	0.94	59*N*A060V17**14
CAP**3619A**	1.00	0.94	59*N*A060V17**14
CAP**3621A**	1.00	0.92	59*N*A060V17**14
CNPH*3017A**	1.00	0.94	59*N*A060V17**14
CNPH*3117A**	1.01	0.93	59*N*A060V17**14
CNPH*3617A**	1.00	0.94	59*N*A060V17**14
CNPV*3017A**	1.00	0.94	59*N*A060V17**14
CNPV*3117A**	1.01	0.93	59*N*A060V17**14
CNPV*3617A**	1.00	0.94	59*N*A060V17**14

DETAILED COOLING CAPACITIES# CONTINUED

CA13NA030**A,B Outdoor Section With CAP**3014** Indoor Section**

COOLING INDOOR MODEL	CAPACITY	POWER	FURNACE MODEL
CNPV*3621A**	1.00	0.94	59*N*A060V17**14
CNPV*3717A**	1.03	0.93	59*N*A060V17**14
CSPH*3012A**	1.00	0.94	59*N*A060V17**14
CSPH*3612A**	1.01	0.93	59*N*A060V17**14
CAP**3017A**	1.00	0.92	59*N*A080V17**14
CAP**3617A**	1.01	0.93	59*N*A080V17**14
CAP**3619A**	1.01	0.93	59*N*A080V17**14
CAP**3621A**	1.01	0.93	59*N*A080V17**14
CNPH*3017A**	1.00	0.92	59*N*A080V17**14
CNPH*3117A**	1.02	0.92	59*N*A080V17**14
CNPH*3617A**	1.00	0.92	59*N*A080V17**14
CNPV*3017A**	1.00	0.92	59*N*A080V17**14
CNPV*3117A**	1.02	0.92	59*N*A080V17**14
CNPV*3617A**	1.00	0.92	59*N*A080V17**14
CNPV*3621A**	1.00	0.92	59*N*A080V17**14
CNPV*3717A**	1.04	0.94	59*N*A080V17**14
CSPH*3012A**	1.01	0.93	59*N*A080V17**14
CSPH*3612A**	1.02	0.92	59*N*A080V17**14
CAP**3619A**	1.01	0.93	59*N*A100V21**20
CAP**3621A**	1.01	0.93	59*N*A100V21**20
CAP**4221A**	1.01	0.92	59*N*A100V21**20
CAP**4224A**	1.01	0.92	59*N*A100V21**20
CNPH*3017A**	1.01	0.93	59*N*A100V21**20
CNPH*3117A**	1.03	0.93	59*N*A100V21**20
CNPH*3617A**	1.01	0.93	59*N*A100V21**20
CNPV*3621A**	1.01	0.93	59*N*A100V21**20
CNPV*4221A**	1.01	0.93	59*N*A100V21**20
CSPH*3012A**	1.01	0.93	59*N*A100V21**20
CSPH*3612A**	1.03	0.93	59*N*A100V21**20
CNPH*3017A**	1.01	0.93	59*N*A120V24**22
CNPH*3117A**	1.03	0.93	59*N*A120V24**22
CNPH*3617A**	1.01	0.93	59*N*A120V24**22
CSPH*3012A**	1.01	0.93	59*N*A120V24**22
CSPH*3612A**	1.02	0.92	59*N*A120V24**22
CAP**3014A**	0.99	1.04	59*P5A040E14**10
CAP**3017A**	0.99	1.05	59*P5A040E14**10
CAP**3614A**	0.99	1.05	59*P5A040E14**10
CAP**3617A**	0.99	1.05	59*P5A040E14**10
CNPH*3017A**	0.99	1.05	59*P5A040E14**10
CNPH*3117A**	1.01	1.05	59*P5A040E14**10
CNPH*3617A**	0.99	1.05	59*P5A040E14**10
CNPV*3014A**	0.99	1.04	59*P5A040E14**10
CNPV*3017A**	0.99	1.05	59*P5A040E14**10
CNPV*3117A**	1.01	1.05	59*P5A040E14**10
CNPV*3617A**	0.99	1.05	59*P5A040E14**10
CNPV*3717A**	1.02	1.05	59*P5A040E14**10
CSPH*3012A**	0.99	1.04	59*P5A040E14**10
CSPH*3612A**	1.01	1.05	59*P5A040E14**10
CAP**3017A**	1.00	0.94	59*P5A060E17**14
CAP**3617A**	1.01	0.95	59*P5A060E17**14
CAP**3619A**	1.01	0.95	59*P5A060E17**14
CAP**3621A**	1.01	0.93	59*P5A060E17**14
CNPH*3017A**	1.01	0.95	59*P5A060E17**14
CNPH*3117A**	1.03	0.95	59*P5A060E17**14
CNPH*3617A**	1.01	0.95	59*P5A060E17**14
CNPV*3017A**	1.01	0.95	59*P5A060E17**14

COOLING INDOOR MODEL	CAPACITY	POWER	FURNACE MODEL
CNPV*3117A**	1.03	0.95	59*P5A060E17**14
CNPV*3617A**	1.01	0.95	59*P5A060E17**14
CNPV*3621A**	1.01	0.95	59*P5A060E17**14
CNPV*3717A**	1.04	0.94	59*P5A060E17**14
CSPH*3012A**	1.01	0.95	59*P5A060E17**14
CSPH*3612A**	1.02	0.94	59*P5A060E17**14
CAP**3017A**	1.01	0.95	59*P5A080E17**16
CAP**3617A**	1.01	0.94	59*P5A080E17**16
CAP**3619A**	1.01	0.94	59*P5A080E17**16
CAP**3621A**	1.01	0.93	59*P5A080E17**16
CNPH*3017A**	1.01	0.95	59*P5A080E17**16
CNPH*3117A**	1.04	0.95	59*P5A080E17**16
CNPH*3617A**	1.01	0.95	59*P5A080E17**16
CNPV*3017A**	1.01	0.95	59*P5A080E17**16
CNPV*3117A**	1.04	0.95	59*P5A080E17**16
CNPV*3617A**	1.01	0.95	59*P5A080E17**16
CNPV*3621A**	1.01	0.96	59*P5A080E17**16
CNPV*3717A**	1.04	0.94	59*P5A080E17**16
CSPH*3012A**	1.01	0.96	59*P5A080E17**16
CSPH*3612A**	1.03	0.95	59*P5A080E17**16
CAP**3017A**	1.00	0.94	OVLAAB036098
CAP**3617A**	1.00	0.94	OVLAAB036098
CNPH*3017A**	1.00	0.94	OVLAAB036098
CNPH*3117A**	1.02	0.95	OVLAAB036098
CNPH*3617A**	1.00	0.94	OVLAAB036098
CNPV*3017A**	1.00	0.94	OVLAAB036098
CNPV*3117A**	1.02	0.95	OVLAAB036098
CNPV*3617A**	1.00	0.94	OVLAAB036098
CNPV*3621A**	1.00	0.94	OVLAAB036098
CNPV*3717A**	1.03	0.95	OVLAAB036098
CSPH*3012A**	1.00	0.99	OVLAAB036098
CSPH*3612A**	1.02	0.95	OVLAAB036098
CAP**3017A**	1.00	0.94	OVLAAB036098
CAP**3617A**	1.00	0.94	OVLAAB036098
CAP**3621A**	1.01	0.94	OVLAAB048112
CNPH*3017A**	1.01	0.95	OVLAAB048112
CNPH*3117A**	1.03	0.93	OVLAAB048112
CNPH*3617A**	1.01	0.95	OVLAAB048112
CNPV*3621A**	1.01	0.95	OVLAAB048112
CSPH*3012A**	1.01	0.96	OVLAAB048112
CSPH*3612A**	1.03	0.95	OVLAAB048112
CAP**3017A**	1.00	0.99	OVMAAB036098
CAP**3617A**	1.00	0.94	OVMAAB036098
CNPH*3017A**	1.00	0.99	OVMAAB036098
CNPH*3117A**	1.02	0.96	OVMAAB036098
CNPH*3617A**	1.00	0.99	OVMAAB036098
CNPV*3017A**	1.00	0.99	OVMAAB036098
CNPV*3117A**	1.02	0.96	OVMAAB036098
CNPV*3617A**	1.00	0.99	OVMAAB036098
CNPV*3621A**	1.00	0.99	OVMAAB036098
CNPV*3717A**	1.03	0.95	OVMAAB036098
CSPH*3012A**	1.01	0.99	OVMAAB036098
CSPH*3612A**	1.02	0.96	OVMAAB036098
CAP**3017A**	1.01	0.93	OVMAAB042112
CAP**3617A**	1.01	0.93	OVMAAB042112
CNPH*3017A**	1.01	0.93	OVMAAB042112

COOLING INDOOR MODEL	CAPACITY	POWER	FURNACE MODEL
CNPH*3117A**	1.03	0.93	OVMAAB042112
CNPH*3617A**	1.01	0.93	OVMAAB042112
CNPV*3017A**	1.01	0.93	OVMAAB042112
CNPV*3117A**	1.03	0.93	OVMAAB042112
CNPV*3617A**	1.01	0.93	OVMAAB042112
CNPV*3621A**	1.01	0.93	OVMAAB042112
CNPV*3717A**	1.04	0.94	OVMAAB042112
CSPH*3012A**	1.01	0.95	OVMAAB042112
CSPH*3612A**	1.02	0.92	OVMAAB042112

See notes on page 74

DETAILED COOLING CAPACITIES# CONTINUED

EVAPORATOR AIR		CONDENSER ENTERING AIR TEMPERATURES °F (°C)																	
		75 (23.9)			85 (29.4)			95 (35)			105 (40.6)			115 (46.1)			125 (51.7)		
CFM	EWB °F (°C)	Capacity MBtuh		Total System KW**	Capacity MBtuh		Total System KW**	Capacity MBtuh		Total System KW**	Capacity MBtuh		Total System KW**	Capacity MBtuh		Total System KW**	Capacity MBtuh		Total System KW**
		Total	Sens‡		Total	Sens‡		Total	Sens‡		Total	Sens‡		Total	Sens‡		Total	Sens‡	
CA13NA036****A,B Outdoor Section With CAP**4821** Indoor Section																			
1050	72 (22.2)	40.22	21.00	2.54	38.50	20.34	2.79	36.66	19.65	3.07	34.69	18.93	3.39	32.56	18.15	3.76	30.22	17.30	4.20
	67 (19.4)	36.61	25.73	2.51	35.00	25.05	2.76	33.29	24.35	3.04	31.46	23.60	3.36	29.49	22.81	3.74	27.34	21.95	4.18
	63 (17.2)††	34.02	24.88	2.49	32.50	24.20	2.74	30.89	23.49	3.02	29.17	22.73	3.35	27.32	21.94	3.73	25.29	21.07	4.18
	62 (16.7)	33.42	30.44	2.49	31.97	29.75	2.74	30.45	29.01	3.02	28.86	28.20	3.35	27.29	27.29	3.73	25.64	25.64	4.18
	57 (13.9)	32.55	32.55	2.48	31.38	31.38	2.73	30.12	30.12	3.02	28.77	28.77	3.35	27.29	27.29	3.73	25.65	25.65	4.18
1200	72 (22.2)	40.90	21.97	2.60	39.11	21.31	2.85	37.20	20.61	3.13	35.17	19.88	3.45	32.96	19.09	3.82	30.54	18.23	4.25
	67 (19.4)	37.25	27.30	2.57	35.57	26.61	2.82	33.80	25.90	3.10	31.91	25.15	3.42	29.88	24.35	3.80	27.67	23.48	4.24
	63 (17.2)††	34.63	26.36	2.55	33.04	25.66	2.80	31.38	24.94	3.08	29.60	24.18	3.41	27.69	23.37	3.79	25.61	22.48	4.24
	62 (16.7)	34.19	32.60	2.55	32.73	31.85	2.80	31.24	31.24	3.08	29.83	29.83	3.41	28.26	28.26	3.79	26.52	26.52	4.24
	57 (13.9)	33.87	33.87	2.55	32.61	32.61	2.80	31.27	31.27	3.08	29.83	29.83	3.41	28.26	28.26	3.79	26.52	26.52	4.24
1350	72 (22.2)	41.40	22.89	2.66	39.55	22.22	2.91	37.60	21.52	3.19	35.50	20.77	3.51	33.24	19.97	3.88	30.75	19.10	4.31
	67 (19.4)	37.72	28.79	2.63	36.00	28.11	2.88	34.19	27.39	3.16	32.26	26.63	3.48	30.19	25.81	3.86	27.93	24.92	4.30
	63 (17.2)††	35.09	27.77	2.61	33.47	27.07	2.86	31.76	26.34	3.14	29.94	25.57	3.47	27.99	24.73	3.85	25.88	23.82	4.29
	62 (16.7)	34.90	34.90	2.61	33.63	33.63	2.86	32.22	32.22	3.15	30.70	30.70	3.47	29.05	29.05	3.85	27.22	27.22	4.30
	57 (13.9)	34.96	34.96	2.61	33.64	33.64	2.86	32.23	32.23	3.15	30.70	30.70	3.47	29.05	29.05	3.85	27.22	27.22	4.29

COOLING INDOOR MODEL	CAPACITY	POWER	FURNACE MODEL
*CAP**4821A**	1.00	1.00	
CAP**4817A**	1.01	1.01	
CAP**4823A**	1.00	1.01	
CAP**4824A**	1.00	1.01	
CAP**6025A**	1.02	1.02	
CNPH*4221A**	0.99	1.00	
CNPH*4321A**	1.02	1.02	
CNPH*4821A**	1.01	1.01	
CNPV*3717A**	1.02	1.02	
CNPV*4217A**	0.99	0.99	
CNPV*4221A**	0.99	1.00	
CNPV*4324A**	1.02	1.02	
CNPV*4821A**	1.01	1.01	
CNPV*4824A**	1.01	1.01	
CSPH*3612A**	1.00	1.01	
CSPH*4212A**	1.00	1.00	
CSPH*4812A**	1.01	1.01	
FB4CNF036	0.96	0.96	
FB4CNF042	1.00	0.96	
FB4CNF048	1.02	0.97	
FE4AN(B,F)003	0.98	0.92	
FE4AN(B,F)005	1.01	0.91	
FE4ANB006	1.02	0.92	
FE4ANF002	0.98	0.95	
FE5ANB004	1.02	0.92	
FF1ENP037	0.98	0.99	
FV4CN(B,F)003	0.99	0.91	
FV4CN(B,F)005	1.02	0.93	
FV4CNB006	1.03	0.94	
FV4CNF002	0.98	0.94	
FX4DN(B,F)037	1.01	0.93	
FX4DN(B,F)043	1.01	0.93	
FX4DN(B,F)049	1.02	0.93	
FY5BNF036	0.97	0.97	
FY5BNF042	0.99	0.99	
CAP**3614A**	0.95	0.95	58CV(A,X)070 – 12
CNPH*3617A**	0.98	0.93	58CV(A,X)070 – 12

COOLING INDOOR MODEL	CAPACITY	POWER	FURNACE MODEL
CNPH*4221A**	0.98	0.94	58CV(A,X)070 – 12
CNPH*4321A**	1.01	0.97	58CV(A,X)070 – 12
CNPH*4821A**	0.99	0.93	58CV(A,X)070 – 12
CSPH*3612A**	0.99	0.93	58CV(A,X)070 – 12
CSPH*4212A**	0.99	0.93	58CV(A,X)070 – 12
CSPH*4812A**	1.00	0.94	58CV(A,X)070 – 12
CAP**3617A**	0.98	0.92	58CV(A,X)090 – 16
CAP**4817A**	1.02	0.96	58CV(A,X)090 – 16
CNPH*3617A**	0.98	0.93	58CV(A,X)090 – 16
CNPH*4221A**	0.99	0.93	58CV(A,X)090 – 16
CNPH*4321A**	1.02	0.93	58CV(A,X)090 – 16
CNPH*4821A**	1.00	0.94	58CV(A,X)090 – 16
CNPV*3617A**	0.98	0.93	58CV(A,X)090 – 16
CNPV*3717A**	1.01	0.93	58CV(A,X)090 – 16
CNPV*4217A**	0.99	0.93	58CV(A,X)090 – 16
CSPH*3612A**	0.99	0.91	58CV(A,X)090 – 16
CSPH*4212A**	0.99	0.91	58CV(A,X)090 – 16
CSPH*4812A**	1.01	0.95	58CV(A,X)090 – 16
CAP**3621A**	0.98	0.92	58CV(A,X)110 – 20
CAP**4221A**	0.99	0.91	58CV(A,X)110 – 20
CAP**4821A**	0.99	0.93	58CV(A,X)110 – 20
CNPH*3617A**	0.98	0.93	58CV(A,X)110 – 20
CNPH*4221A**	0.99	0.93	58CV(A,X)110 – 20
CNPH*4321A**	1.02	0.93	58CV(A,X)110 – 20
CNPH*4821A**	1.00	0.94	58CV(A,X)110 – 20
CNPV*3621A**	0.98	0.93	58CV(A,X)110 – 20
CNPV*4221A**	0.99	0.93	58CV(A,X)110 – 20
CNPV*4821A**	1.00	0.94	58CV(A,X)110 – 20
CSPH*3612A**	0.99	0.91	58CV(A,X)110 – 20
CSPH*4212A**	0.99	0.91	58CV(A,X)110 – 20
CSPH*4812A**	1.01	0.95	58CV(A,X)110 – 20
CAP**4224A**	0.99	0.91	58CV(A,X)135 – 22
CAP**4824A**	0.99	0.91	58CV(A,X)135 – 22
CNPH*3617A**	0.98	0.92	58CV(A,X)135 – 22
CNPH*4221A**	0.99	0.93	58CV(A,X)135 – 22
CNPH*4321A**	1.02	0.93	58CV(A,X)135 – 22
CNPH*4821A**	1.00	0.92	58CV(A,X)135 – 22

COOLING INDOOR MODEL	CAPACITY	POWER	FURNACE MODEL
CNPV*4324A**	1.02	0.93	58CV(A,X)135 – 22
CNPV*4824A**	1.00	0.92	58CV(A,X)135 – 22
CSPH*3612A**	0.99	0.91	58CV(A,X)135 – 22
CSPH*4212A**	0.99	0.91	58CV(A,X)135 – 22
CSPH*4812A**	1.01	0.92	58CV(A,X)135 – 22
CAP**4224A**	0.99	0.91	58CV(A,X)155 – 22
CAP**4824A**	1.00	0.92	58CV(A,X)155 – 22
CNPH*3617A**	0.97	0.91	58CV(A,X)155 – 22
CNPH*4221A**	0.99	0.91	58CV(A,X)155 – 22
CNPH*4321A**	1.02	0.93	58CV(A,X)155 – 22
CNPH*4821A**	1.00	0.92	58CV(A,X)155 – 22
CNPV*4324A**	1.02	0.93	58CV(A,X)155 – 22
CNPV*4824A**	1.00	0.92	58CV(A,X)155 – 22
CSPH*3612A**	0.99	0.91	58CV(A,X)155 – 22
CSPH*4212A**	0.99	0.91	58CV(A,X)155 – 22
CSPH*4812A**	1.01	0.92	58CV(A,X)155 – 22
CAP**3619A**	0.97	0.97	58HDV040– – 12
CNPH*3617A**	0.97	0.97	58HDV040– – 12
CNPH*4221A**	0.98	0.98	58HDV040– – 12
CNPH*4321A**	1.01	1.01	58HDV040– – 12
CNPV*3617A**	0.97	0.97	58HDV040– – 12
CNPV*3621A**	0.97	0.97	58HDV040– – 12
CNPV*3717A**	1.01	1.01	58HDV040– – 12
CNPV*4217A**	0.99	0.99	58HDV040– – 12
CNPV*4221A**	0.98	0.98	58HDV040– – 12
CSPH*3612A**	0.99	0.99	58HDV040– – 12
CSPH*4212A**	1.00	1.00	58HDV040– – 12
CAP**3619A**	0.98	0.98	58HDV060– – 12
CNPH*3617A**	0.98	0.98	58HDV060– – 12
CNPH*4221A**	0.99	0.97	58HDV060– – 12
CNPH*4321A**	1.02	0.98	58HDV060– – 12
CNPH*4821A**	1.01	0.98	58HDV060– – 12
CNPV*3617A**	0.97	0.97	58HDV060– – 12
CNPV*3621A**	0.98	0.98	58HDV060– – 12
CNPV*3717A**	1.02	0.97	58HDV060– – 12
CNPV*4217A**	1.00	1.00	58HDV060– – 12
CNPV*4221A**	0.99	0.99	58HDV060– – 12

DETAILED COOLING CAPACITIES# CONTINUED

CA13NA036**A,B Outdoor Section With CAP**4821** Indoor Section**

COOLING INDOOR MODEL	CAPACITY	POWER	FURNACE MODEL
CSPH*3612A**	1.00	1.00	58HDV060––12
CSPH*4212A**	1.01	1.01	58HDV060––12
CSPH*4812A**	1.01	0.98	58HDV060––12
CAP**4823A**	1.01	0.97	58HDV080––20
CNPH*3617A**	0.99	0.99	58HDV080––20
CNPH*4221A**	1.01	0.96	58HDV080––20
CNPH*4321A**	1.02	0.98	58HDV080––20
CNPH*4821A**	1.02	0.97	58HDV080––20
CNPV*3621A**	0.99	0.99	58HDV080––20
CNPV*4221A**	1.01	0.96	58HDV080––20
CNPV*4324A**	1.02	0.94	58HDV080––20
CSPH*3612A**	1.00	0.96	58HDV080––20
CSPH*4212A**	1.01	0.97	58HDV080––20
CSPH*4812A**	1.02	0.96	58HDV080––20
CAP**4224A**	0.99	0.95	58HDV100––20
CAP**4824A**	1.01	0.95	58HDV100––20
CNPH*3617A**	0.98	0.98	58HDV100––20
CNPH*4221A**	1.00	0.96	58HDV100––20
CNPH*4321A**	1.02	0.94	58HDV100––20
CNPH*4821A**	1.01	0.95	58HDV100––20
CNPV*4324A**	1.02	0.94	58HDV100––20
CNPV*4824A**	1.01	0.95	58HDV100––20
CSPH*3612A**	1.00	0.96	58HDV100––20
CSPH*4212A**	1.01	0.97	58HDV100––20
CSPH*4812A**	1.02	0.96	58HDV100––20
CAP**3617A**	0.99	0.93	58ME(B,C)060–12
CAP**4817A**	1.01	0.95	58ME(B,C)060–12
CNPH*3617A**	0.98	0.98	58ME(B,C)060–12
CNPH*4221A**	0.99	0.93	58ME(B,C)060–12
CNPH*4321A**	1.02	0.94	58ME(B,C)060–12
CNPH*4821A**	1.01	0.95	58ME(B,C)060–12
CNPV*3617A**	0.98	0.98	58ME(B,C)060–12
CNPV*3717A**	1.02	0.94	58ME(B,C)060–12
CNPV*4217A**	0.99	0.93	58ME(B,C)060–12
CSPH*3612A**	0.99	0.93	58ME(B,C)060–12
CSPH*4212A**	0.99	0.93	58ME(B,C)060–12
CSPH*4812A**	1.01	0.95	58ME(B,C)060–12
CAP**3617A**	0.98	0.92	58ME(B,C)080–12
CAP**4817A**	1.01	0.95	58ME(B,C)080–12
CNPH*3617A**	0.98	0.98	58ME(B,C)080–12
CNPH*4221A**	0.99	0.93	58ME(B,C)080–12
CNPH*4321A**	1.02	0.94	58ME(B,C)080–12
CNPH*4821A**	1.01	0.95	58ME(B,C)080–12
CNPV*3617A**	0.98	0.92	58ME(B,C)080–12
CNPV*3717A**	1.02	0.94	58ME(B,C)080–12
CNPV*4217A**	0.99	0.93	58ME(B,C)080–12
CSPH*3612A**	0.99	0.93	58ME(B,C)080–12
CSPH*4212A**	0.99	0.93	58ME(B,C)080–12
CSPH*4812A**	1.01	0.95	58ME(B,C)080–12
CAP**3617A**	0.99	0.93	58ME(B,C)080–16
CAP**4817A**	1.01	0.95	58ME(B,C)080–16
CNPH*3617A**	0.98	0.98	58ME(B,C)080–16
CNPH*4221A**	0.99	0.93	58ME(B,C)080–16
CNPH*4321A**	1.02	0.94	58ME(B,C)080–16
CNPH*4821A**	1.01	0.95	58ME(B,C)080–16
CNPV*3617A**	0.98	0.98	58ME(B,C)080–16

COOLING INDOOR MODEL	CAPACITY	POWER	FURNACE MODEL
CNPV*3717A**	1.02	0.94	58ME(B,C)080–16
CNPV*4217A**	0.99	0.93	58ME(B,C)080–16
CSPH*3612A**	0.99	0.93	58ME(B,C)080–16
CSPH*4212A**	0.99	0.93	58ME(B,C)080–16
CSPH*4812A**	1.01	0.95	58ME(B,C)080–16
CAP**3621A**	0.99	0.91	58ME(B,C)100–20
CAP**4221A**	0.99	0.91	58ME(B,C)100–20
CAP**4821A**	1.00	0.92	58ME(B,C)100–20
CNPH*3617A**	0.98	0.92	58ME(B,C)100–20
CNPH*4221A**	0.99	0.93	58ME(B,C)100–20
CNPH*4321A**	1.02	0.94	58ME(B,C)100–20
CNPH*4821A**	1.01	0.92	58ME(B,C)100–20
CNPV*3621A**	0.98	0.92	58ME(B,C)100–20
CNPV*4221A**	0.99	0.93	58ME(B,C)100–20
CNPV*4821A**	1.01	0.92	58ME(B,C)100–20
CSPH*3612A**	0.99	0.93	58ME(B,C)100–20
CSPH*4212A**	0.99	0.93	58ME(B,C)100–20
CSPH*4812A**	1.01	0.93	58ME(B,C)100–20
CAP**4824A**	1.02	0.96	58ME(B,C)120–20
CNPH*4821A**	1.02	0.94	58ME(B,C)120–20
CNPV*4824A**	1.02	0.94	58ME(B,C)120–20
CSPH*4812A**	1.03	0.94	58ME(B,C)120–20
CAP**3617A**	0.99	0.93	58MEB040–12
CAP**4817A**	1.01	0.95	58MEB040–12
CNPH*3617A**	0.98	0.92	58MEB040–12
CNPH*4221A**	0.99	0.93	58MEB040–12
CNPH*4321A**	1.02	0.94	58MEB040–12
CNPH*4821A**	1.01	0.95	58MEB040–12
CNPV*3617A**	0.98	0.92	58MEB040–12
CNPV*3717A**	1.02	0.94	58MEB040–12
CNPV*4217A**	0.99	0.93	58MEB040–12
CSPH*3612A**	0.99	0.93	58MEB040–12
CSPH*4212A**	0.99	0.93	58MEB040–12
CSPH*4812A**	1.01	0.95	58MEB040–12
CAP**3617A**	0.98	0.94	58MV(B,C)060–14
CAP**4817A**	1.02	0.98	58MV(B,C)060–14
CNPH*3617A**	0.98	0.94	58MV(B,C)060–14
CNPH*4221A**	0.99	0.93	58MV(B,C)060–14
CNPH*4321A**	1.02	0.94	58MV(B,C)060–14
CNPH*4821A**	1.01	0.95	58MV(B,C)060–14
CNPV*3617A**	0.98	0.94	58MV(B,C)060–14
CNPV*3717A**	1.02	0.93	58MV(B,C)060–14
CNPV*4217A**	0.99	0.93	58MV(B,C)060–14
CSPH*3612A**	0.99	0.95	58MV(B,C)060–14
CSPH*4212A**	0.99	0.91	58MV(B,C)060–14
CSPH*4812A**	1.01	0.95	58MV(B,C)060–14
CAP**3621A**	0.98	0.94	58MV(B,C)080–14
CAP**4221A**	0.99	0.95	58MV(B,C)080–14
CAP**4821A**	0.99	0.95	58MV(B,C)080–14
CNPH*3617A**	0.98	0.93	58MV(B,C)080–14
CNPH*4221A**	0.99	0.95	58MV(B,C)080–14
CNPH*4321A**	1.02	0.97	58MV(B,C)080–14
CNPH*4821A**	1.00	0.94	58MV(B,C)080–14
CNPV*3621A**	0.98	0.98	58MV(B,C)080–14
CNPV*4221A**	0.99	0.99	58MV(B,C)080–14
CNPV*4821A**	1.00	0.94	58MV(B,C)080–14

COOLING INDOOR MODEL	CAPACITY	POWER	FURNACE MODEL
CSPH*3612A**	0.98	0.92	58MV(B,C)080–14
CSPH*4212A**	0.99	0.93	58MV(B,C)080–14
CSPH*4812A**	1.01	0.95	58MV(B,C)080–14
CAP**3621A**	0.98	0.92	58MV(B,C)080–20
CAP**4221A**	0.99	0.93	58MV(B,C)080–20
CAP**4821A**	0.99	0.93	58MV(B,C)080–20
CNPH*3617A**	0.98	0.93	58MV(B,C)080–20
CNPH*4221A**	0.99	0.93	58MV(B,C)080–20
CNPH*4321A**	1.01	0.93	58MV(B,C)080–20
CNPH*4821A**	0.99	0.93	58MV(B,C)080–20
CNPV*3621A**	0.98	0.98	58MV(B,C)080–20
CNPV*4221A**	0.99	0.93	58MV(B,C)080–20
CNPV*4821A**	0.99	0.93	58MV(B,C)080–20
CSPH*3612A**	0.99	0.93	58MV(B,C)080–20
CSPH*4212A**	0.99	0.91	58MV(B,C)080–20
CSPH*4812A**	1.00	0.94	58MV(B,C)080–20
CAP**3621A**	0.98	0.92	58MV(B,C)100–20
CAP**4221A**	0.99	0.93	58MV(B,C)100–20
CAP**4821A**	1.00	0.94	58MV(B,C)100–20
CNPH*3617A**	0.98	0.94	58MV(B,C)100–20
CNPH*4221A**	0.99	0.93	58MV(B,C)100–20
CNPH*4321A**	1.02	0.93	58MV(B,C)100–20
CNPH*4821A**	1.00	0.94	58MV(B,C)100–20
CNPV*3621A**	0.98	0.98	58MV(B,C)100–20
CNPV*4221A**	0.99	0.93	58MV(B,C)100–20
CNPV*4821A**	1.00	0.94	58MV(B,C)100–20
CSPH*3612A**	0.98	0.92	58MV(B,C)100–20
CSPH*4212A**	0.99	0.91	58MV(B,C)100–20
CSPH*4812A**	1.01	0.95	58MV(B,C)100–20
CAP**4224A**	0.99	0.91	58MV(B,C)120–20
CAP**4824A**	0.99	0.93	58MV(B,C)120–20
CNPH*3617A**	0.98	0.93	58MV(B,C)120–20
CNPH*4221A**	0.99	0.93	58MV(B,C)120–20
CNPH*4321A**	1.02	0.93	58MV(B,C)120–20
CNPH*4821A**	1.00	0.94	58MV(B,C)120–20
CNPV*4324A**	1.02	0.93	58MV(B,C)120–20
CNPV*4824A**	1.00	0.94	58MV(B,C)120–20
CSPH*3612A**	0.99	0.91	58MV(B,C)120–20
CSPH*4212A**	0.99	0.91	58MV(B,C)120–20
CSPH*4812A**	1.01	0.95	58MV(B,C)120–20
CAP**4224A**	0.98	0.92	58MVB040–14
CAP**4824A**	0.99	0.95	58MVB040–14
CNPH*3617A**	0.97	0.97	58MVB040–14
CNPH*4221A**	0.98	0.94	58MVB040–14
CNPH*4321A**	1.01	0.97	58MVB040–14
CNPH*4821A**	0.99	0.93	58MVB040–14
CNPV*4324A**	1.01	0.97	58MVB040–14
CNPV*4824A**	0.99	0.93	58MVB040–14
CSPH*3612A**	0.99	0.95	58MVB040–14
CSPH*4212A**	0.99	0.93	58MVB040–14
CSPH*4812A**	1.00	0.94	58MVB040–14
CAP**3614A**	0.96	0.96	58PH*045–08
CNPH*3617A**	0.97	0.97	58PH*045–08
CNPH*4221A**	0.99	0.99	58PH*045–08
CNPH*4321A**	1.02	1.02	58PH*045–08
CSPH*3612A**	0.99	0.99	58PH*045–08

DETAILED COOLING CAPACITIES# CONTINUED

CA13NA036**A,B Outdoor Section With CAP**4821** Indoor Section**

COOLING INDOOR MODEL	CAPACITY	POWER	FURNACE MODEL
CSPH*4212A**	1.00	1.00	58PH*045–08
CAP**3617A**	0.98	0.96	58PH*070–16
CAP**4817A**	1.00	0.96	58PH*070–16
CNPH*3617A**	0.98	0.98	58PH*070–16
CNPH*4221A**	0.99	0.97	58PH*070–16
CNPH*4321A**	1.02	1.02	58PH*070–16
CNPH*4821A**	1.00	0.96	58PH*070–16
CNPV*3617A**	0.98	0.96	58PH*070–16
CNPV*3717A**	1.02	0.97	58PH*070–16
CNPV*4217A**	0.99	0.99	58PH*070–16
CSPH*3612A**	1.00	0.96	58PH*070–16
CSPH*4212A**	1.01	0.95	58PH*070–16
CSPH*4812A**	1.01	0.96	58PH*070–16
CAP**3621A**	0.99	0.91	58PH*090–16
CAP**4221A**	0.99	0.92	58PH*090–16
CAP**4821A**	1.01	0.95	58PH*090–16
CNPH*3617A**	0.98	0.92	58PH*090–16
CNPH*4221A**	0.99	0.93	58PH*090–16
CNPH*4321A**	1.02	0.94	58PH*090–16
CNPH*4821A**	1.01	0.93	58PH*090–16
CNPV*3621A**	0.98	0.92	58PH*090–16
CNPV*4221A**	0.99	0.92	58PH*090–16
CNPV*4821A**	1.01	0.93	58PH*090–16
CSPH*3612A**	1.01	0.92	58PH*090–16
CSPH*4212A**	1.02	0.93	58PH*090–16
CSPH*4812A**	1.01	0.93	58PH*090–16
CAP**3621A**	0.99	0.92	58PH*110–20
CAP**4221A**	1.00	0.92	58PH*110–20
CAP**4821A**	1.01	0.95	58PH*110–20
CNPH*3617A**	0.98	0.92	58PH*110–20
CNPH*4221A**	1.00	0.92	58PH*110–20
CNPH*4321A**	1.02	0.94	58PH*110–20
CNPH*4821A**	1.01	0.93	58PH*110–20
CNPV*3621A**	0.99	0.93	58PH*110–20
CNPV*4221A**	1.00	0.92	58PH*110–20
CNPV*4821A**	1.01	0.93	58PH*110–20
CSPH*3612A**	1.01	0.93	58PH*110–20
CSPH*4212A**	1.02	0.93	58PH*110–20
CSPH*4812A**	1.02	0.93	58PH*110–20
CAP**4824A**	1.02	0.96	58PH*135–20
CNPH*4821A**	1.02	0.96	58PH*135–20
CNPV*4824A**	1.02	0.96	58PH*135–20
CSPH*4812A**	1.02	0.96	58PH*135–20
CAP**3617A**	0.98	0.94	58UVB060–14
CAP**4817A**	1.02	0.98	58UVB060–14
CNPV*3617A**	0.98	0.94	58UVB060–14
CNPV*3717A**	1.02	0.93	58UVB060–14
CNPV*4217A**	0.99	0.93	58UVB060–14
CAP**3621A**	0.98	0.94	58UVB080–14
CAP**4221A**	0.99	0.95	58UVB080–14
CAP**4821A**	0.99	0.95	58UVB080–14
CNPV*3621A**	0.98	0.98	58UVB080–14
CNPV*4221A**	0.99	0.95	58UVB080–14
CNPV*4821A**	1.00	0.94	58UVB080–14
CAP**3621A**	0.98	0.92	58UVB080–20
CAP**4221A**	0.99	0.93	58UVB080–20

COOLING INDOOR MODEL	CAPACITY	POWER	FURNACE MODEL
CAP**4821A**	0.99	0.93	58UVB080–20
CNPV*3621A**	0.98	0.98	58UVB080–20
CNPV*4221A**	0.99	0.93	58UVB080–20
CNPV*4821A**	0.99	0.93	58UVB080–20
CAP**3621A**	0.98	0.92	58UVB100–20
CAP**4221A**	0.99	0.93	58UVB100–20
CAP**4821A**	1.00	0.94	58UVB100–20
CNPV*3621A**	0.98	0.98	58UVB100–20
CNPV*4221A**	0.99	0.93	58UVB100–20
CNPV*4821A**	1.00	0.94	58UVB100–20
CAP**4224A**	0.99	0.91	58UVB120–20
CAP**4824A**	0.99	0.93	58UVB120–20
CNPV*4324A**	1.02	0.93	58UVB120–20
CNPV*4824A**	1.00	0.94	58UVB120–20
CAP**3617A**	0.98	0.98	58VLR105–12
CNPH*3617A**	0.98	0.98	58VLR105–12
CNPH*4221A**	0.99	0.95	58VLR105–12
CNPH*4321A**	1.02	0.96	58VLR105–12
CNPV*3617A**	0.98	0.98	58VLR105–12
CNPV*3717A**	1.02	0.96	58VLR105–12
CNPV*4217A**	1.00	0.96	58VLR105–12
CSPH*3612A**	1.01	0.95	58VLR105–12
CSPH*4212A**	1.01	0.95	58VLR105–12
CAP**3621A**	0.98	0.92	58VLR120–20
CAP**4221A**	0.99	0.93	58VLR120–20
CAP**4821A**	0.99	0.93	58VLR120–20
CNPH*3617A**	0.98	0.93	58VLR120–20
CNPH*4221A**	0.99	0.93	58VLR120–20
CNPH*4321A**	1.02	0.93	58VLR120–20
CNPH*4821A**	1.00	0.92	58VLR120–20
CNPV*3621A**	0.98	0.93	58VLR120–20
CNPV*4221A**	0.99	0.93	58VLR120–20
CNPV*4821A**	1.00	0.92	58VLR120–20
CSPH*3612A**	1.00	0.92	58VLR120–20
CSPH*4212A**	1.01	0.92	58VLR120–20
CSPH*4812A**	1.01	0.92	58VLR120–20
CAP**3617A**	0.97	0.93	58VMR105–12
CNPH*3617A**	0.97	0.97	58VMR105–12
CNPH*4221A**	0.98	0.94	58VMR105–12
CNPH*4321A**	1.01	0.95	58VMR105–12
CNPV*3617A**	0.97	0.97	58VMR105–12
CNPV*3717A**	1.01	0.95	58VMR105–12
CNPV*4217A**	0.99	0.95	58VMR105–12
CSPH*3612A**	0.99	0.93	58VMR105–12
CSPH*4212A**	1.00	0.94	58VMR105–12
CAP**3621A**	0.98	0.92	58VMR120–20
CAP**4221A**	0.99	0.93	58VMR120–20
CAP**4821A**	0.99	0.93	58VMR120–20
CNPH*3617A**	0.98	0.98	58VMR120–20
CNPH*4221A**	0.99	0.93	58VMR120–20
CNPH*4321A**	1.01	0.93	58VMR120–20
CNPH*4821A**	0.99	0.93	58VMR120–20
CNPV*3621A**	0.98	0.98	58VMR120–20
CNPV*4221A**	0.99	0.93	58VMR120–20
CNPV*4821A**	0.99	0.93	58VMR120–20
CSPH*3612A**	1.00	0.94	58VMR120–20

COOLING INDOOR MODEL	CAPACITY	POWER	FURNACE MODEL
CSPH*4212A**	1.01	0.95	58VMR120–20
CSPH*4812A**	1.00	0.94	58VMR120–20
CAP**3617A**	0.96	0.93	59*N*A060V17**14
CAP**3619A**	0.96	0.93	59*N*A060V17**14
CAP**3621A**	0.96	0.93	59*N*A060V17**14
CAP**4221A**	0.97	0.94	59*N*A060V17**14
CNPH*3617A**	0.88	0.87	59*N*A060V17**14
CNPH*4221A**	0.97	0.94	59*N*A060V17**14
CNPH*4321A**	0.99	0.93	59*N*A060V17**14
CNPV*3617A**	0.88	0.87	59*N*A060V17**14
CNPV*3621A**	0.88	0.87	59*N*A060V17**14
CNPV*3717A**	0.99	0.95	59*N*A060V17**14
CNPV*4217A**	0.98	0.94	59*N*A060V17**14
CNPV*4221A**	0.97	0.94	59*N*A060V17**14
CSPH*3612A**	0.98	0.95	59*N*A060V17**14
CSPH*4212A**	0.99	0.95	59*N*A060V17**14
CAP**3617A**	0.96	0.93	59*N*A080V17**14
CAP**3619A**	0.96	0.93	59*N*A080V17**14
CAP**3621A**	0.96	0.93	59*N*A080V17**14
CAP**4221A**	0.98	0.93	59*N*A080V17**14
CNPH*3617A**	0.96	0.93	59*N*A080V17**14
CNPH*4221A**	0.98	0.94	59*N*A080V17**14
CNPH*4321A**	1.00	0.93	59*N*A080V17**14
CNPV*3617A**	0.96	0.93	59*N*A080V17**14
CNPV*3621A**	0.96	0.93	59*N*A080V17**14
CNPV*3717A**	1.00	0.93	59*N*A080V17**14
CNPV*4217A**	0.98	0.94	59*N*A080V17**14
CNPV*4221A**	0.98	0.94	59*N*A080V17**14
CSPH*3612A**	0.99	0.95	59*N*A080V17**14
CSPH*4212A**	0.99	0.93	59*N*A080V17**14
CAP**3619A**	0.97	0.94	59*N*A100V21**20
CAP**3621A**	0.97	0.93	59*N*A100V21**20
CAP**4221A**	0.98	0.93	59*N*A100V21**20
CAP**4224A**	0.98	0.91	59*N*A100V21**20
CAP**4821A**	0.99	0.93	59*N*A100V21**20
CAP**4824A**	0.99	0.93	59*N*A100V21**20
CNPH*3617A**	0.96	0.93	59*N*A100V21**20
CNPH*4221A**	0.98	0.93	59*N*A100V21**20
CNPH*4321A**	1.01	0.92	59*N*A100V21**20
CNPV*3621A**	0.97	0.94	59*N*A100V21**20
CNPV*4221A**	0.98	0.93	59*N*A100V21**20
CNPV*4324A**	1.01	0.92	59*N*A100V21**20
CNPV*4821A**	0.99	0.93	59*N*A100V21**20
CNPV*4824A**	0.99	0.93	59*N*A100V21**20
CSPH*3612A**	0.99	0.92	59*N*A100V21**20
CSPH*4212A**	0.99	0.93	59*N*A100V21**20
CAP**4224A**	0.98	0.91	59*N*A120V24**22
CNPH*3617A**	0.97	0.93	59*N*A120V24**22
CNPH*4221A**	0.98	0.91	59*N*A120V24**22
CNPH*4321A**	1.01	0.92	59*N*A120V24**22
CNPV*4324A**	1.01	0.92	59*N*A120V24**22
CSPH*3612A**	0.99	0.92	59*N*A120V24**22
CSPH*4212A**	0.99	0.91	59*N*A120V24**22
CAP**3617A**	0.97	0.95	59*P5A060E17**14
CAP**3619A**	0.97	0.95	59*P5A060E17**14
CAP**3621A**	0.98	0.94	59*P5A060E17**14

DETAILED COOLING CAPACITIES# CONTINUED

CA13NA036**A,B Outdoor Section With CAP**4821** Indoor Section**

COOLING INDOOR MODEL	CAPACITY	POWER	FURNACE MODEL
CAP**4221A**	0.98	0.95	59*P5A060E17**14
CNPH*3617A**	0.97	0.95	59*P5A060E17**14
CNPH*4221A**	0.98	0.95	59*P5A060E17**14
CNPH*4321A**	1.01	0.97	59*P5A060E17**14
CNPV*3617A**	0.97	0.95	59*P5A060E17**14
CNPV*3621A**	0.97	0.95	59*P5A060E17**14
CNPV*3717A**	1.01	0.96	59*P5A060E17**14
CNPV*4217A**	0.99	0.95	59*P5A060E17**14
CNPV*4221A**	0.98	0.95	59*P5A060E17**14
CSPH*3612A**	0.99	0.96	59*P5A060E17**14
CSPH*4212A**	1.00	0.96	59*P5A060E17**14
CAP**3617A**	0.97	0.94	59*P5A080E17**16
CAP**3619A**	0.97	0.94	59*P5A080E17**16
CAP**3621A**	0.98	0.94	59*P5A080E17**16
CAP**4221A**	0.98	0.95	59*P5A080E17**16
CNPH*3617A**	0.97	0.94	59*P5A080E17**16
CNPH*4221A**	0.98	0.95	59*P5A080E17**16
CNPH*4321A**	1.01	0.94	59*P5A080E17**16
CNPV*3617A**	0.97	0.94	59*P5A080E17**16
CNPV*3621A**	0.97	0.94	59*P5A080E17**16
CNPV*3717A**	1.01	0.94	59*P5A080E17**16
CNPV*4217A**	0.99	0.95	59*P5A080E17**16
CNPV*4221A**	0.98	0.95	59*P5A080E17**16
CSPH*3612A**	0.99	0.95	59*P5A080E17**16
CSPH*4212A**	1.00	0.96	59*P5A080E17**16
CAP**3617A**	0.98	0.98	OVLAAB036098
CNPH*3617A**	0.97	0.97	OVLAAB036098
CNPH*4221A**	0.98	0.98	OVLAAB036098
CNPH*4321A**	1.01	0.95	OVLAAB036098
CNPV*3617A**	0.97	0.97	OVLAAB036098
CNPV*3621A**	0.97	0.97	OVLAAB036098
CNPV*3717A**	1.01	0.96	OVLAAB036098
CNPV*4217A**	0.99	0.99	OVLAAB036098
CNPV*4221A**	0.98	0.98	OVLAAB036098
CSPH*3612A**	0.99	0.99	OVLAAB036098
CSPH*4212A**	1.00	0.96	OVLAAB036098
CAP**3621A**	0.98	0.94	OVLAAB048112
CAP**4221A**	0.99	0.95	OVLAAB048112
CAP**4821A**	1.00	0.96	OVLAAB048112
CNPH*3617A**	0.98	0.98	OVLAAB048112
CNPH*4221A**	0.99	0.95	OVLAAB048112
CNPH*4321A**	1.02	0.96	OVLAAB048112
CNPH*4821A**	1.01	0.96	OVLAAB048112
CNPV*3621A**	0.98	0.98	OVLAAB048112
CNPV*4221A**	0.99	0.99	OVLAAB048112
CNPV*4324A**	1.02	0.94	OVLAAB048112
CNPV*4821A**	1.01	0.96	OVLAAB048112
CSPH*3612A**	1.01	0.96	OVLAAB048112
CSPH*4212A**	1.01	0.95	OVLAAB048112
CSPH*4812A**	1.01	0.97	OVLAAB048112
CNPH*3617A**	1.00	0.96	OVLAAB060154
CNPH*4221A**	1.01	0.97	OVLAAB060154
CNPH*4321A**	1.02	0.92	OVLAAB060154
CNPH*4821A**	1.02	0.96	OVLAAB060154
CNPV*4324A**	1.02	0.94	OVLAAB060154
CSPH*3612A**	1.02	0.96	OVLAAB060154

COOLING INDOOR MODEL	CAPACITY	POWER	FURNACE MODEL
CSPH*4212A**	1.02	0.94	OVLAAB060154
CSPH*4812A**	1.03	0.97	OVLAAB060154
CAP**3617A**	0.98	0.98	OVMAAB036098
CNPH*3617A**	0.97	0.97	OVMAAB036098
CNPH*4221A**	0.98	0.98	OVMAAB036098
CNPH*4321A**	1.01	0.95	OVMAAB036098
CNPV*3617A**	0.97	0.97	OVMAAB036098
CNPV*3621A**	0.98	0.98	OVMAAB036098
CNPV*3717A**	1.01	0.97	OVMAAB036098
CNPV*4217A**	0.99	0.99	OVMAAB036098
CNPV*4221A**	0.98	0.98	OVMAAB036098
CSPH*3612A**	1.00	1.00	OVMAAB036098
CSPH*4212A**	1.01	0.96	OVMAAB036098
CAP**3617A**	0.98	0.98	OVMAAB042112
CAP**4817A**	1.00	0.94	OVMAAB042112
CNPH*3617A**	0.98	0.98	OVMAAB042112
CNPH*4221A**	0.99	0.95	OVMAAB042112
CNPH*4321A**	1.02	0.93	OVMAAB042112
CNPH*4821A**	1.00	0.94	OVMAAB042112
CNPV*3617A**	0.98	0.98	OVMAAB042112
CNPV*3621A**	0.98	0.98	OVMAAB042112
CNPV*3717A**	1.02	0.97	OVMAAB042112
CNPV*4217A**	0.99	0.95	OVMAAB042112
CNPV*4221A**	0.99	0.95	OVMAAB042112
CSPH*3612A**	1.00	0.94	OVMAAB042112
CSPH*4212A**	1.01	0.95	OVMAAB042112
CSPH*4812A**	1.01	0.95	OVMAAB042112

See notes on page 74

DETAILED COOLING CAPACITIES# CONTINUED

EVAPORATOR AIR		CONDENSER ENTERING AIR TEMPERATURES °F (°C)																	
		75 (23.9)			85 (29.4)			95 (35)			105 (40.6)			115 (46.1)			125 (51.7)		
CFM	EWB °F (°C)	Capacity MBtuh		Total System KW**	Capacity MBtuh		Total System KW**	Capacity MBtuh		Total System KW**	Capacity MBtuh		Total System KW**	Capacity MBtuh		Total System KW**	Capacity MBtuh		Total System KW**
		Total	Sens‡		Total	Sens‡		Total	Sens‡		Total	Sens‡		Total	Sens‡		Total	Sens‡	
CA13NA042****(A,B) Outdoor Section With 42 Indoor Section																			
1225	57 (13.9)	48.49	25.49	3.39	46.39	24.69	3.73	44.18	23.85	4.11	41.83	22.97	4.52	39.28	22.03	4.98	36.45	21.00	5.47
	62 (16.7)	44.47	31.36	3.33	42.52	30.54	3.67	40.46	29.67	4.05	38.28	28.77	4.47	35.93	27.82	4.92	33.34	26.78	5.42
	63 (17.2)††	41.53	30.43	3.29	39.69	29.59	3.63	37.74	28.72	4.01	35.68	27.80	4.43	33.47	26.84	4.88	31.05	25.79	5.38
	67 (19.4)	40.83	37.19	3.28	39.07	36.35	3.63	37.22	35.45	4.00	35.29	34.48	4.42	33.32	33.32	4.88	31.36	31.36	5.38
	72 (22.2)	39.73	39.73	3.27	38.29	38.29	3.62	36.76	36.76	4.00	35.12	35.12	4.42	33.34	33.34	4.88	31.36	31.36	5.38
1400	57 (13.9)	49.21	26.62	3.47	47.02	25.80	3.81	44.73	24.95	4.19	42.30	24.06	4.61	39.67	23.11	5.06	36.75	22.07	5.55
	62 (16.7)	45.16	33.20	3.42	43.14	32.37	3.76	41.00	31.49	4.13	38.75	30.59	4.55	36.34	29.63	5.01	33.67	28.57	5.50
	63 (17.2)††	42.22	32.16	3.38	40.31	31.31	3.72	38.28	30.42	4.09	36.17	29.51	4.51	33.89	28.53	4.97	31.40	27.47	5.46
	67 (19.4)	41.69	39.75	3.37	39.91	38.85	3.71	38.02	38.02	4.09	36.34	36.34	4.51	34.45	34.45	4.98	32.33	32.33	5.48
	72 (22.2)	41.25	41.25	3.37	39.72	39.72	3.71	38.08	38.08	4.09	36.34	36.34	4.51	34.45	34.45	4.98	32.33	32.33	5.48
1575	57 (13.9)	49.75	27.70	3.56	47.50	26.88	3.90	45.14	26.02	4.27	42.64	25.12	4.69	39.94	24.16	5.14	36.95	23.10	5.63
	62 (16.7)	45.69	34.99	3.50	43.61	34.15	3.84	41.42	33.28	4.22	39.12	32.36	4.63	36.65	31.38	5.09	33.93	30.29	5.58
	63 (17.2)††	42.75	33.85	3.46	40.79	33.00	3.80	38.72	32.11	4.17	36.55	31.18	4.59	34.23	30.18	5.05	31.68	29.07	5.54
	67 (19.4)	42.52	42.08	3.46	40.87	40.87	3.80	39.14	39.14	4.18	37.31	37.31	4.61	35.32	35.32	5.07	33.09	33.09	5.56
	72 (22.2)	42.49	42.49	3.46	40.87	40.87	3.80	39.15	39.15	4.18	37.32	37.32	4.61	35.32	35.32	5.07	33.09	33.09	5.56

COOLING INDOOR MODEL	CAPACITY	POWER	FURNACE MODEL
*CAP**4221A**	1.00	1.00	
CAP**4224A**	1.00	1.00	
CAP**4817A**	0.99	0.99	
CAP**4821A**	1.01	1.01	
CAP**4823A**	1.01	1.01	
CAP**4824A**	1.01	1.01	
CAP**6025A**	1.01	1.01	
CNPH*4221A**	1.00	1.00	
CNPH*4321A**	1.01	1.01	
CNPH*4821A**	1.01	1.01	
CNPV*4217A**	1.00	1.00	
CNPV*4221A**	1.00	1.00	
CNPV*4324A**	1.01	1.01	
CNPV*4821A**	1.01	1.01	
CNPV*4824A**	1.01	1.01	
CSPH*4212A**	1.00	1.00	
CSPH*4812A**	1.01	1.01	
FB4CNF042	1.00	0.96	
FB4CNF042	1.00	0.96	
FB4CNF048	1.00	0.96	
FB4CNF048	1.00	0.96	
FB4CNF060	1.04	0.95	
FE4AN(B,F)003	0.98	0.89	
FE4AN(B,F)005	1.00	0.90	
FE4ANB006	1.00	0.90	
FE5ANB004	1.00	0.90	
FV4CN(B,F)003	0.99	0.94	
FV4CN(B,F)005	1.01	0.95	
FV4CNB006	1.04	0.95	
FX4DN(B,F)043	1.01	0.97	
FX4DN(B,F)049	1.02	0.94	
FX4DN(B,F)061	1.04	0.95	
FY5BNF042	1.00	1.00	
FY5BNF048	1.02	1.02	
CNPH*4221A**	0.99	0.97	58CV(A,X)070 – 12

COOLING INDOOR MODEL	CAPACITY	POWER	FURNACE MODEL
CNPH*4321A**	1.01	0.97	58CV(A,X)070 – 12
CNPH*4821A**	1.00	0.98	58CV(A,X)070 – 12
CSPH*4212A**	0.99	0.97	58CV(A,X)070 – 12
CSPH*4812A**	1.00	0.98	58CV(A,X)070 – 12
CAP**4817A**	0.98	0.93	58CV(A,X)090 – 16
CNPH*4221A**	0.98	0.93	58CV(A,X)090 – 16
CNPH*4321A**	1.01	0.93	58CV(A,X)090 – 16
CNPH*4821A**	1.00	0.94	58CV(A,X)090 – 16
CNPV*4217A**	0.99	0.93	58CV(A,X)090 – 16
CSPH*4212A**	1.00	0.94	58CV(A,X)090 – 16
CSPH*4812A**	1.00	0.94	58CV(A,X)090 – 16
CAP**4221A**	0.99	0.97	58CV(A,X)110 – 20
CAP**4821A**	1.00	0.96	58CV(A,X)110 – 20
CNPH*4221A**	0.99	0.94	58CV(A,X)110 – 20
CNPH*4321A**	1.01	0.93	58CV(A,X)110 – 20
CNPH*4821A**	1.00	0.94	58CV(A,X)110 – 20
CNPV*4221A**	0.99	0.94	58CV(A,X)110 – 20
CNPV*4821A**	1.00	0.96	58CV(A,X)110 – 20
CSPH*4212A**	1.00	0.94	58CV(A,X)110 – 20
CSPH*4812A**	1.01	0.95	58CV(A,X)110 – 20
CAP**4224A**	0.99	0.94	58CV(A,X)135 – 22
CAP**4824A**	1.00	0.94	58CV(A,X)135 – 22
CNPH*4221A**	0.99	0.93	58CV(A,X)135 – 22
CNPH*4321A**	1.01	0.93	58CV(A,X)135 – 22
CNPH*4821A**	1.00	0.92	58CV(A,X)135 – 22
CNPV*4324A**	1.01	0.93	58CV(A,X)135 – 22
CNPV*4824A**	1.00	0.94	58CV(A,X)135 – 22
CSPH*4212A**	1.00	0.92	58CV(A,X)135 – 22
CSPH*4812A**	1.01	0.93	58CV(A,X)135 – 22
CAP**4224A**	0.99	0.93	58CV(A,X)155 – 22
CAP**4824A**	1.00	0.92	58CV(A,X)155 – 22
CNPH*4221A**	0.99	0.93	58CV(A,X)155 – 22
CNPH*4321A**	1.01	0.93	58CV(A,X)155 – 22
CNPH*4821A**	1.00	0.92	58CV(A,X)155 – 22
CNPV*4324A**	1.02	0.94	58CV(A,X)155 – 22

COOLING INDOOR MODEL	CAPACITY	POWER	FURNACE MODEL
CSPH*4212A**	1.00	0.92	58CV(A,X)155 – 22
CSPH*4812A**	1.01	0.93	58CV(A,X)155 – 22
CNPH*4221A**	0.98	0.98	58HDV060 – – 12
CNPH*4321A**	1.01	1.01	58HDV060 – – 12
CNPH*4821A**	1.00	0.98	58HDV060 – – 12
CNPV*4217A**	0.99	0.99	58HDV060 – – 12
CNPV*4221A**	0.98	0.98	58HDV060 – – 12
CNPV*4821A**	1.00	0.98	58HDV060 – – 12
CSPH*4212A**	1.01	1.01	58HDV060 – – 12
CSPH*4812A**	1.01	1.01	58HDV060 – – 12
CAP**4823A**	1.01	0.97	58HDV080 – – 20
CNPH*4221A**	0.99	0.97	58HDV080 – – 20
CNPH*4321A**	1.01	0.97	58HDV080 – – 20
CNPH*4821A**	1.01	0.95	58HDV080 – – 20
CNPV*4221A**	0.99	0.97	58HDV080 – – 20
CNPV*4324A**	1.02	0.96	58HDV080 – – 20
CNPV*4821A**	1.01	0.95	58HDV080 – – 20
CNPV*4824A**	1.01	0.95	58HDV080 – – 20
CSPH*4212A**	1.01	0.97	58HDV080 – – 20
CSPH*4812A**	1.01	0.97	58HDV080 – – 20
CAP**4224A**	0.99	0.94	58HDV100 – – 20
CAP**4824A**	1.00	0.94	58HDV100 – – 20
CAP**6025A**	1.01	0.93	58HDV100 – – 20
CNPH*4221A**	0.99	0.94	58HDV100 – – 20
CNPH*4321A**	1.01	0.97	58HDV100 – – 20
CNPH*4821A**	1.01	0.95	58HDV100 – – 20
CNPV*4324A**	1.02	0.94	58HDV100 – – 20
CNPV*4324A**	1.02	0.94	58HDV100 – – 20
CNPV*4824A**	1.01	0.95	58HDV100 – – 20
CSPH*4212A**	1.01	0.97	58HDV100 – – 20
CSPH*4812A**	1.01	0.97	58HDV100 – – 20
CAP**4817A**	1.00	0.94	58ME(B,C)040 – 12
CNPH*4221A**	0.99	0.93	58ME(B,C)040 – 12
CNPH*4821A**	1.00	0.94	58ME(B,C)040 – 12
CNPV*4217A**	1.00	0.94	58ME(B,C)040 – 12

DETAILED COOLING CAPACITIES# CONTINUED

CA13NA042**A,B Outdoor Section With CAP**4221** Indoor Section**

COOLING INDOOR MODEL	CAPACITY	POWER	FURNACE MODEL
CSPH*4212A**	1.00	0.94	58ME(B,C)040–12
CSPH*4812A**	1.00	0.94	58ME(B,C)040–12
CAP**4817A**	1.00	0.94	58ME(B,C)060–12
CNPH*4221A**	0.99	0.94	58ME(B,C)060–12
CNPH*4821A**	1.00	0.94	58ME(B,C)060–12
CNPV*4217A**	1.00	0.94	58ME(B,C)060–12
CSPH*4212A**	1.00	0.94	58ME(B,C)060–12
CSPH*4812A**	1.00	0.94	58ME(B,C)060–12
CAP**4817A**	1.00	0.94	58ME(B,C)080–12
CNPH*4221A**	0.99	0.93	58ME(B,C)080–12
CNPH*4821A**	1.00	0.94	58ME(B,C)080–12
CNPV*4217A**	1.00	0.94	58ME(B,C)080–12
CSPH*4212A**	1.00	0.94	58ME(B,C)080–12
CSPH*4812A**	1.00	0.94	58ME(B,C)080–12
CAP**4817A**	1.00	0.94	58ME(B,C)080–16
CNPH*4221A**	0.98	0.92	58ME(B,C)080–16
CNPH*4821A**	1.00	0.94	58ME(B,C)080–16
CNPV*4217A**	0.99	0.93	58ME(B,C)080–16
CSPH*4212A**	1.00	0.94	58ME(B,C)080–16
CSPH*4812A**	1.00	0.94	58ME(B,C)080–16
CAP**4221A**	0.99	0.93	58ME(B,C)100–20
CAP**4821A**	1.00	0.92	58ME(B,C)100–20
CNPH*4221A**	0.99	0.93	58ME(B,C)100–20
CNPH*4821A**	1.00	0.92	58ME(B,C)100–20
CNPV*4221A**	0.99	0.93	58ME(B,C)100–20
CNPV*4821A**	1.00	0.92	58ME(B,C)100–20
CSPH*4212A**	1.00	0.92	58ME(B,C)100–20
CSPH*4812A**	1.00	0.92	58ME(B,C)100–20
CAP**4224A**	0.99	0.91	58ME(B,C)120–20
CNPH*4221A**	0.99	0.93	58ME(B,C)120–20
CNPH*4821A**	1.00	0.92	58ME(B,C)120–20
CNPV*4824A**	1.00	0.92	58ME(B,C)120–20
CSPH*4212A**	1.00	0.92	58ME(B,C)120–20
CSPH*4812A**	1.00	0.92	58ME(B,C)120–20
CAP**4817A**	1.00	0.94	58MEB040–12
CNPH*4221A**	0.99	0.93	58MEB040–12
CNPH*4321A**	1.01	0.97	58MEB040–12
CNPH*4821A**	1.00	0.94	58MEB040–12
CNPV*4217A**	1.00	0.94	58MEB040–12
CSPH*4212A**	1.00	0.94	58MEB040–12
CSPH*4812A**	1.00	0.94	58MEB040–12
CNPH*4321A**	1.01	0.97	58MEC060–12
CNPH*4321A**	1.01	0.97	58MEC080–12
CNPH*4321A**	1.01	0.93	58MEC080–16
CNPH*4321A**	1.01	0.93	58MEC100–20
CAP**4824A**	1.01	0.93	58MEC120–20
CNPH*4321A**	1.01	0.93	58MEC120–20
CNPV*4324A**	1.01	0.93	58MEC120–20
CAP**4224A**	0.98	0.96	58MV(B,C)040–14
CAP**4824A**	1.00	0.98	58MV(B,C)040–14
CNPH*4221A**	0.98	0.96	58MV(B,C)040–14
CNPH*4821A**	0.99	0.97	58MV(B,C)040–14
CNPV*4824A**	1.00	0.98	58MV(B,C)040–14
CSPH*4212A**	0.98	0.96	58MV(B,C)040–14
CSPH*4812A**	1.00	0.98	58MV(B,C)040–14
CAP**4817A**	0.98	0.93	58MV(B,C)060–14

COOLING INDOOR MODEL	CAPACITY	POWER	FURNACE MODEL
CNPH*4221A**	0.99	0.95	58MV(B,C)060–14
CNPH*4321A**	1.01	0.97	58MV(B,C)060–14
CNPH*4821A**	1.00	0.93	58MV(B,C)060–14
CNPV*4217A**	0.99	0.94	58MV(B,C)060–14
CSPH*4212A**	1.01	0.94	58MV(B,C)060–14
CSPH*4812A**	1.01	0.94	58MV(B,C)060–14
CAP**4221A**	0.98	0.96	58MV(B,C)080–14
CAP**4821A**	0.99	0.97	58MV(B,C)080–14
CNPH*4221A**	0.98	0.94	58MV(B,C)080–14
CNPH*4321A**	1.01	0.97	58MV(B,C)080–14
CNPH*4821A**	1.00	0.96	58MV(B,C)080–14
CNPV*4221A**	0.98	0.96	58MV(B,C)080–14
CNPV*4821A**	0.99	0.97	58MV(B,C)080–14
CSPH*4212A**	1.00	0.96	58MV(B,C)080–14
CSPH*4812A**	1.00	0.96	58MV(B,C)080–14
CAP**4221A**	0.98	0.93	58MV(B,C)080–20
CAP**4821A**	1.00	0.96	58MV(B,C)080–20
CNPH*4221A**	0.98	0.95	58MV(B,C)080–20
CNPH*4321A**	1.01	0.97	58MV(B,C)080–20
CNPH*4821A**	1.00	0.94	58MV(B,C)080–20
CNPV*4221A**	0.98	0.95	58MV(B,C)080–20
CNPV*4821A**	1.00	0.94	58MV(B,C)080–20
CSPH*4212A**	1.00	0.96	58MV(B,C)080–20
CSPH*4812A**	1.00	0.94	58MV(B,C)080–20
CAP**4221A**	0.98	0.93	58MV(B,C)100–20
CAP**4821A**	0.99	0.92	58MV(B,C)100–20
CNPH*4221A**	0.98	0.94	58MV(B,C)100–20
CNPH*4321A**	1.01	0.97	58MV(B,C)100–20
CNPH*4821A**	0.99	0.92	58MV(B,C)100–20
CNPV*4221A**	0.98	0.94	58MV(B,C)100–20
CNPV*4821A**	0.99	0.92	58MV(B,C)100–20
CSPH*4212A**	1.00	0.93	58MV(B,C)100–20
CSPH*4812A**	1.00	0.93	58MV(B,C)100–20
CAP**4224A**	0.98	0.91	58MV(B,C)120–20
CAP**4824A**	1.00	0.93	58MV(B,C)120–20
CNPH*4221A**	0.98	0.93	58MV(B,C)120–20
CNPH*4321A**	1.01	0.97	58MV(B,C)120–20
CNPH*4821A**	1.00	0.92	58MV(B,C)120–20
CNPV*4324A**	1.01	0.93	58MV(B,C)120–20
CNPV*4824A**	1.00	0.92	58MV(B,C)120–20
CSPH*4212A**	1.00	0.93	58MV(B,C)120–20
CSPH*4812A**	1.00	0.92	58MV(B,C)120–20
CNPH*4321A**	1.01	0.97	58MVB040–14
CNPV*4324A**	1.01	0.97	58MVB040–14
CAP**4817A**	0.96	0.95	58PH*070–16
CNPH*4221A**	0.98	0.96	58PH*070–16
CNPH*4321A**	1.01	1.01	58PH*070–16
CNPH*4821A**	1.00	0.98	58PH*070–16
CNPV*4217A**	0.99	0.97	58PH*070–16
CSPH*4212A**	0.99	0.94	58PH*070–16
CSPH*4812A**	1.00	0.98	58PH*070–16
CAP**4221A**	0.99	0.93	58PH*090–16
CAP**4821A**	1.00	0.92	58PH*090–16
CNPH*4221A**	0.99	0.93	58PH*090–16
CNPH*4321A**	1.01	0.93	58PH*090–16
CNPH*4821A**	1.00	0.92	58PH*090–16

COOLING INDOOR MODEL	CAPACITY	POWER	FURNACE MODEL
CNPV*4221A**	0.99	0.93	58PH*090–16
CNPV*4821A**	1.00	0.92	58PH*090–16
CSPH*4212A**	0.99	0.93	58PH*090–16
CSPH*4812A**	1.00	0.92	58PH*090–16
CAP**4221A**	0.99	0.91	58PH*110–20
CAP**4821A**	1.00	0.92	58PH*110–20
CNPH*4221A**	0.99	0.91	58PH*110–20
CNPH*4321A**	1.01	0.93	58PH*110–20
CNPH*4821A**	1.00	0.92	58PH*110–20
CNPV*4221A**	0.99	0.91	58PH*110–20
CNPV*4821A**	1.00	0.92	58PH*110–20
CSPH*4212A**	0.99	0.91	58PH*110–20
CSPH*4812A**	1.00	0.92	58PH*110–20
CAP**4224A**	0.99	0.91	58PH*135–20
CAP**4824A**	1.00	0.92	58PH*135–20
CNPH*4221A**	0.99	0.93	58PH*135–20
CNPH*4321A**	1.01	0.93	58PH*135–20
CNPH*4821A**	1.00	0.92	58PH*135–20
CNPV*4324A**	1.04	0.95	58PH*135–20
CNPV*4824A**	1.00	0.92	58PH*135–20
CSPH*4212A**	0.99	0.91	58PH*135–20
CSPH*4812A**	1.00	0.92	58PH*135–20
CAP**4817A**	0.98	0.93	58UVB060–14
CNPV*4217A**	0.99	0.94	58UVB060–14
CAP**4221A**	0.98	0.96	58UVB080–14
CAP**4821A**	0.99	0.97	58UVB080–14
CNPV*4221A**	0.98	0.96	58UVB080–14
CNPV*4821A**	0.99	0.97	58UVB080–14
CAP**4221A**	0.98	0.93	58UVB080–20
CAP**4821A**	1.00	0.96	58UVB080–20
CNPV*4221A**	0.98	0.95	58UVB080–20
CNPV*4821A**	1.00	0.94	58UVB080–20
CAP**4221A**	0.98	0.93	58UVB100–20
CAP**4821A**	0.99	0.93	58UVB100–20
CNPV*4221A**	0.98	0.93	58UVB100–20
CNPV*4821A**	0.99	0.93	58UVB100–20
CAP**4224A**	0.98	0.92	58UVB120–20
CAP**4824A**	1.00	0.94	58UVB120–20
CNPV*4324A**	1.01	0.93	58UVB120–20
CNPV*4824A**	1.00	0.94	58UVB120–20
CAP**4221A**	0.98	0.92	58VLR120–20
CAP**4821A**	1.00	0.94	58VLR120–20
CNPH*4221A**	0.98	0.92	58VLR120–20
CNPH*4321A**	1.01	0.93	58VLR120–20
CNPH*4821A**	1.00	0.92	58VLR120–20
CNPV*4221A**	0.98	0.92	58VLR120–20
CNPV*4821A**	1.00	0.92	58VLR120–20
CSPH*4212A**	1.00	0.94	58VLR120–20
CSPH*4812A**	1.00	0.94	58VLR120–20
CAP**4221A**	0.98	0.92	58VMR120–20
CAP**4821A**	0.99	0.93	58VMR120–20
CNPH*4221A**	0.98	0.93	58VMR120–20
CNPH*4321A**	1.01	0.93	58VMR120–20
CNPH*4821A**	1.00	0.94	58VMR120–20
CNPV*4221A**	0.98	0.93	58VMR120–20
CNPV*4821A**	1.00	0.94	58VMR120–20

DETAILED COOLING CAPACITIES# CONTINUED

CA13NA042**A,B Outdoor Section With CAP**4221** Indoor Section**

COOLING INDOOR MODEL	CAPACITY	POWER	FURNACE MODEL
CSPH*4212A**	1.00	0.94	58VMR120 – 20
CSPH*4812A**	1.00	0.94	58VMR120 – 20
CAP**4221A**	0.96	0.95	59*N*A060V17**14
CAP**4817A**	0.99	0.96	59*N*A060V17**14
CAP**4821A**	0.99	0.96	59*N*A060V17**14
CNPH*4221A**	0.96	0.95	59*N*A060V17**14
CNPH*4321A**	1.00	0.96	59*N*A060V17**14
CNPH*4821A**	0.99	0.95	59*N*A060V17**14
CNPV*4217A**	0.98	0.94	59*N*A060V17**14
CNPV*4221A**	0.96	0.95	59*N*A060V17**14
CNPV*4821A**	0.99	0.95	59*N*A060V17**14
CSPH*4212A**	0.99	0.95	59*N*A060V17**14
CSPH*4812A**	0.99	0.95	59*N*A060V17**14
CAP**4221A**	0.98	0.95	59*N*A080V17**14
CAP**4817A**	0.99	0.94	59*N*A080V17**14
CAP**4821A**	0.99	0.94	59*N*A080V17**14
CNPH*4221A**	0.98	0.94	59*N*A080V17**14
CNPH*4321A**	1.00	0.93	59*N*A080V17**14
CNPH*4821A**	0.99	0.94	59*N*A080V17**14
CNPV*4217A**	0.98	0.94	59*N*A080V17**14
CNPV*4221A**	0.98	0.94	59*N*A080V17**14
CNPV*4821A**	0.99	0.94	59*N*A080V17**14
CSPH*4212A**	0.99	0.94	59*N*A080V17**14
CSPH*4812A**	1.00	0.96	59*N*A080V17**14
CAP**4221A**	0.98	0.93	59*N*A100V21**20
CAP**4224A**	0.98	0.93	59*N*A100V21**20
CAP**4821A**	0.99	0.93	59*N*A100V21**20
CAP**4823A**	0.99	0.92	59*N*A100V21**20
CAP**4824A**	0.99	0.93	59*N*A100V21**20
CNPH*4221A**	0.98	0.93	59*N*A100V21**20
CNPH*4321A**	1.00	0.93	59*N*A100V21**20
CNPH*4821A**	0.99	0.92	59*N*A100V21**20
CNPV*4221A**	0.98	0.93	59*N*A100V21**20
CNPV*4324A**	1.00	0.92	59*N*A100V21**20
CNPV*4821A**	0.99	0.92	59*N*A100V21**20
CNPV*4824A**	0.99	0.92	59*N*A100V21**20
CSPH*4212A**	1.00	0.93	59*N*A100V21**20
CSPH*4812A**	1.00	0.93	59*N*A100V21**20
CAP**4224A**	0.98	0.92	59*N*A120V24**22
CAP**4823A**	0.99	0.92	59*N*A120V24**22
CAP**4824A**	0.99	0.93	59*N*A120V24**22
CNPH*4221A**	0.98	0.91	59*N*A120V24**22
CNPH*4321A**	1.00	0.92	59*N*A120V24**22
CNPH*4821A**	0.99	0.91	59*N*A120V24**22
CNPV*4324A**	1.01	0.93	59*N*A120V24**22
CNPV*4824A**	0.99	0.91	59*N*A120V24**22
CSPH*4212A**	1.00	0.92	59*N*A120V24**22
CSPH*4812A**	1.00	0.92	59*N*A120V24**22
CAP**4221A**	0.98	0.96	59*P5A060E17**14
CAP**4817A**	1.00	0.97	59*P5A060E17**14
CAP**4821A**	0.99	0.96	59*P5A060E17**14
CNPH*4221A**	0.98	0.96	59*P5A060E17**14
CNPH*4321A**	1.01	0.97	59*P5A060E17**14
CNPH*4821A**	1.00	0.96	59*P5A060E17**14
CNPV*4217A**	0.99	0.95	59*P5A060E17**14
CNPV*4221A**	0.98	0.96	59*P5A060E17**14

COOLING INDOOR MODEL	CAPACITY	POWER	FURNACE MODEL
CNPV*4821A**	1.00	0.96	59*P5A060E17**14
CSPH*4212A**	1.00	0.96	59*P5A060E17**14
CSPH*4812A**	1.00	0.96	59*P5A060E17**14
CAP**4221A**	0.98	0.95	59*P5A080E17**16
CAP**4817A**	1.00	0.96	59*P5A080E17**16
CAP**4821A**	1.00	0.97	59*P5A080E17**16
CNPH*4221A**	0.98	0.96	59*P5A080E17**16
CNPH*4321A**	1.01	0.97	59*P5A080E17**16
CNPH*4821A**	1.00	0.96	59*P5A080E17**16
CNPV*4217A**	0.99	0.95	59*P5A080E17**16
CNPV*4221A**	0.98	0.96	59*P5A080E17**16
CNPV*4821A**	1.00	0.96	59*P5A080E17**16
CSPH*4212A**	1.00	0.96	59*P5A080E17**16
CSPH*4812A**	1.00	0.96	59*P5A080E17**16
CAP**4221A**	0.98	0.93	59*P5A100E21**16
CAP**4224A**	0.98	0.93	59*P5A100E21**16
CAP**4821A**	0.99	0.94	59*P5A100E21**16
CAP**4823A**	0.99	0.94	59*P5A100E21**16
CAP**4824A**	1.00	0.96	59*P5A100E21**16
CNPH*4221A**	0.98	0.94	59*P5A100E21**16
CNPH*4321A**	1.01	0.94	59*P5A100E21**16
CNPH*4821A**	1.00	0.93	59*P5A100E21**16
CNPV*4221A**	0.98	0.94	59*P5A100E21**16
CNPV*4324A**	1.01	0.94	59*P5A100E21**16
CNPV*4821A**	1.00	0.93	59*P5A100E21**16
CNPV*4824A**	1.00	0.93	59*P5A100E21**16
CSPH*4212A**	1.00	0.96	59*P5A100E21**16
CSPH*4812A**	1.00	0.93	59*P5A100E21**16
CAP**4224A**	0.99	0.94	59*P5A120E24**22
CAP**4823A**	1.00	0.93	59*P5A120E24**22
CAP**4824A**	1.01	0.95	59*P5A120E24**22
CNPH*4221A**	0.99	0.94	59*P5A120E24**22
CNPH*4321A**	1.02	0.94	59*P5A120E24**22
CNPH*4821A**	1.01	0.94	59*P5A120E24**22
CNPV*4324A**	1.02	0.94	59*P5A120E24**22
CNPV*4824A**	1.01	0.94	59*P5A120E24**22
CSPH*4212A**	1.01	0.94	59*P5A120E24**22
CSPH*4812A**	1.01	0.94	59*P5A120E24**22
CAP**4221A**	0.99	0.99	OVLAAB048112
CAP**4821A**	1.00	1.00	OVLAAB048112
CNPH*4221A**	0.99	0.99	OVLAAB048112
CNPH*4321A**	1.01	0.97	OVLAAB048112
CNPH*4821A**	1.00	0.96	OVLAAB048112
CNPV*4221A**	0.99	0.99	OVLAAB048112
CNPV*4324A**	1.02	0.98	OVLAAB048112
CNPV*4821A**	1.00	0.96	OVLAAB048112
CNPV*4824A**	1.00	0.96	OVLAAB048112
CSPH*4212A**	1.01	0.99	OVLAAB048112
CSPH*4812A**	1.01	0.99	OVLAAB048112
CNPH*4221A**	1.00	0.98	OVLAAB060154
CNPH*4321A**	1.04	0.97	OVLAAB060154
CNPH*4821A**	1.02	0.96	OVLAAB060154
CNPV*4324A**	1.04	0.95	OVLAAB060154
CNPV*4824A**	1.02	0.96	OVLAAB060154
CSPH*4212A**	1.02	0.96	OVLAAB060154
CSPH*4812A**	1.04	0.97	OVLAAB060154

COOLING INDOOR MODEL	CAPACITY	POWER	FURNACE MODEL
CAP**4817A**	1.00	0.96	OVMAAB042112
CNPH*4221A**	0.98	0.96	OVMAAB042112
CNPH*4321A**	1.01	0.95	OVMAAB042112
CNPH*4821A**	1.00	0.96	OVMAAB042112
CNPV*4217A**	0.99	0.97	OVMAAB042112
CNPV*4221A**	0.98	0.96	OVMAAB042112
CNPV*4821A**	1.00	0.96	OVMAAB042112
CSPH*4212A**	1.00	0.96	OVMAAB042112
CSPH*4812A**	1.00	0.96	OVMAAB042112

See notes on page 74

DETAILED COOLING CAPACITIES# CONTINUED

EVAPORATOR AIR		CONDENSER ENTERING AIR TEMPERATURES °F (°C)																	
		75 (23.9)			85 (29.4)			95 (35)			105 (40.6)			115 (46.1)			125 (51.7)		
CFM	EWB °F (°C)	Capacity MBtuh		Total System KW**	Capacity MBtuh		Total System KW**	Capacity MBtuh		Total System KW**	Capacity MBtuh		Total System KW**	Capacity MBtuh		Total System KW**	Capacity MBtuh		Total System KW**
		Total	Sens‡		Total	Sens‡		Total	Sens‡		Total	Sens‡		Total	Sens‡		Total	Sens‡	
CA13NA048****(A,B) Outdoor Section With CAP**4821A** Indoor Section																			
1400	72 (22.2)	54.48	26.42	3.32	52.18	25.62	3.67	49.73	24.77	4.05	47.13	23.89	4.48	44.34	22.96	4.94	41.30	21.95	5.45
	67 (19.4)	49.80	32.57	3.30	47.63	31.74	3.64	45.34	30.88	4.03	42.93	29.97	4.45	40.34	29.02	4.92	37.58	28.02	5.43
	63 (17.2)††	46.41	31.55	3.28	44.36	30.70	3.63	42.19	29.82	4.01	39.89	28.90	4.44	37.46	27.94	4.91	34.91	26.94	5.42
	62 (16.7)	45.58	38.68	3.28	43.61	37.81	3.62	41.55	36.89	4.01	39.45	39.21	4.43	37.47	37.47	4.91	35.38	35.38	5.42
	57 (13.9)	44.55	44.55	3.27	42.94	42.94	3.62	41.23	41.23	4.01	39.42	39.42	4.43	37.47	37.47	4.91	35.39	35.39	5.42
1600	72 (22.2)	55.34	27.67	3.40	52.95	26.86	3.75	50.42	26.01	4.13	47.73	25.12	4.56	44.84	24.17	5.02	41.69	23.15	5.52
	67 (19.4)	50.62	34.60	3.38	48.38	33.76	3.72	46.00	32.88	4.11	43.51	31.98	4.53	40.84	31.01	5.00	38.00	29.98	5.51
	63 (17.2)††	47.22	33.46	3.36	45.08	32.60	3.71	42.83	31.71	4.09	40.47	30.78	4.52	37.96	29.80	4.99	35.33	28.77	5.49
	62 (16.7)	46.58	41.42	3.36	44.61	44.23	3.70	42.74	42.74	4.09	40.82	40.82	4.52	38.75	38.75	4.99	36.51	36.51	5.50
	57 (13.9)	46.27	46.27	3.36	44.56	44.56	3.70	42.75	42.75	4.09	40.82	40.82	4.52	38.75	38.75	4.99	36.52	36.52	5.50
1800	72 (22.2)	55.96	28.85	3.48	53.51	28.03	3.83	50.90	27.17	4.21	48.15	26.28	4.64	45.18	25.32	5.10	41.94	24.28	5.60
	67 (19.4)	51.21	36.53	3.46	48.91	35.69	3.80	46.48	34.81	4.19	43.93	33.88	4.61	41.20	32.89	5.08	38.30	31.83	5.58
	63 (17.2)††	47.80	35.26	3.44	45.61	34.40	3.79	43.31	33.50	4.17	40.89	32.56	4.60	38.33	31.55	5.06	35.64	30.47	5.57
	62 (16.7)	47.66	47.66	3.44	45.87	45.87	3.79	43.97	43.97	4.17	41.94	41.94	4.60	39.77	39.77	5.07	37.41	37.41	5.58
	57 (13.9)	47.67	47.67	3.44	45.88	45.88	3.79	43.97	43.97	4.17	41.95	41.95	4.60	39.77	39.77	5.07	37.41	37.41	5.58

COOLING INDOOR MODEL	CAPACITY	POWER	FURNACE MODEL
*CAP**4821A**	1.00	1.00	
CAP**4817A**	0.98	0.98	
CAP**4823A**	1.00	1.00	
CAP**4824A**	0.99	0.99	
CAP**6021A**	1.00	0.98	
CAP**6024A**	1.01	0.99	
CAP**6025A**	1.00	1.00	
CNPH*4821A**	0.99	0.99	
CNPH*6024A**	1.01	0.99	
CNPH*6124A**	1.00	1.00	
CNPV*4821A**	0.99	0.99	
CNPV*4824A**	0.99	0.99	
CNPV*6024A**	1.01	0.99	
CNPV*6124A**	1.01	1.01	
CSPH*4812A**	1.00	1.00	
CSPH*6012A**	1.01	0.99	
FB4CNF048	0.97	0.97	
FB4CNF048	0.98	0.98	
FB4CNF060	0.99	0.95	
FE4AN(B,F)005	1.00	0.92	
FE4ANB006	1.01	0.91	
FV4CN(B,F)005	1.00	0.92	
FV4CNB006	1.01	0.91	
FX4DN(B,F)049	1.01	0.93	
FX4DN(B,F)061	1.02	0.94	
FY5BNB060	1.00	1.00	
FY5BNF048	0.99	0.99	
CAP**4817A**	0.98	0.94	58CV(A,X)090 – 16
CNPH*4821A**	0.98	0.92	58CV(A,X)090 – 16
CNPH*6024A**	1.00	0.94	58CV(A,X)090 – 16
CNPH*6124A**	1.00	0.96	58CV(A,X)090 – 16
CSPH*4812A**	0.99	0.93	58CV(A,X)090 – 16
CSPH*6012A**	1.00	0.92	58CV(A,X)090 – 16
CAP**4821A**	0.98	0.92	58CV(A,X)110 – 20
CAP**6021A**	1.00	0.92	58CV(A,X)110 – 20

COOLING INDOOR MODEL	CAPACITY	POWER	FURNACE MODEL
CNPH*4821A**	0.98	0.92	58CV(A,X)110 – 20
CNPH*6024A**	1.00	0.92	58CV(A,X)110 – 20
CNPH*6124A**	1.01	0.97	58CV(A,X)110 – 20
CNPV*4821A**	0.98	0.92	58CV(A,X)110 – 20
CSPH*4812A**	0.98	0.92	58CV(A,X)110 – 20
CSPH*6012A**	1.00	0.92	58CV(A,X)110 – 20
CAP**4824A**	0.98	0.92	58CV(A,X)135 – 22
CAP**6024A**	1.00	0.92	58CV(A,X)135 – 22
CAP**6025A**	1.00	0.94	58CV(A,X)135 – 22
CNPH*4821A**	0.98	0.92	58CV(A,X)135 – 22
CNPH*6024A**	1.00	0.92	58CV(A,X)135 – 22
CNPH*6124A**	1.01	1.01	58CV(A,X)135 – 22
CNPV*4824A**	0.98	0.92	58CV(A,X)135 – 22
CNPV*6024A**	1.00	0.92	58CV(A,X)135 – 22
CNPV*6124A**	1.01	0.93	58CV(A,X)135 – 22
CSPH*4812A**	0.98	0.92	58CV(A,X)135 – 22
CSPH*6012A**	1.00	0.92	58CV(A,X)135 – 22
CAP**4824A**	0.98	0.90	58CV(A,X)155 – 22
CAP**6024A**	1.00	0.90	58CV(A,X)155 – 22
CAP**6025A**	1.00	0.92	58CV(A,X)155 – 22
CNPH*4821A**	0.99	0.91	58CV(A,X)155 – 22
CNPH*6024A**	1.00	0.90	58CV(A,X)155 – 22
CNPH*6124A**	1.01	0.93	58CV(A,X)155 – 22
CNPV*4824A**	0.98	0.90	58CV(A,X)155 – 22
CNPV*6024A**	1.00	0.90	58CV(A,X)155 – 22
CNPV*6124A**	1.01	0.93	58CV(A,X)155 – 22
CSPH*4812A**	0.98	0.90	58CV(A,X)155 – 22
CSPH*6012A**	1.00	0.90	58CV(A,X)155 – 22
CAP**4823A**	0.99	0.99	58HDV080– – 20
CNPH*4821A**	0.99	0.97	58HDV080– – 20
CNPH*6024A**	1.00	0.96	58HDV080– – 20
CNPH*6124A**	1.01	1.01	58HDV080– – 20
CNPV*4821A**	0.99	0.97	58HDV080– – 20
CNPV*4824A**	0.99	0.97	58HDV080– – 20
CNPV*6024A**	1.00	0.96	58HDV080– – 20

COOLING INDOOR MODEL	CAPACITY	POWER	FURNACE MODEL
CNPV*6124A**	1.01	0.97	58HDV080– – 20
CSPH*4812A**	1.00	1.00	58HDV080– – 20
CSPH*6012A**	1.02	1.02	58HDV080– – 20
CAP**4824A**	0.98	0.95	58HDV100– – 20
CAP**6024A**	1.00	0.96	58HDV100– – 20
CAP**6025A**	1.01	1.01	58HDV100– – 20
CNPH*4821A**	0.99	0.97	58HDV100– – 20
CNPH*6024A**	1.00	0.96	58HDV100– – 20
CNPH*6124A**	1.01	1.01	58HDV100– – 20
CNPV*4824A**	0.99	0.97	58HDV100– – 20
CNPV*6024A**	1.00	0.96	58HDV100– – 20
CNPV*6124A**	1.00	0.94	58HDV100– – 20
CNPV*6124A**	1.00	0.94	58HDV100– – 20
CSPH*4812A**	1.00	1.00	58HDV100– – 20
CSPH*6012A**	1.01	1.01	58HDV100– – 20
CAP**4817A**	0.98	0.98	58ME(B,C)080 – 16
CNPH*4821A**	0.98	0.94	58ME(B,C)080 – 16
CNPH*6024A**	0.98	0.94	58ME(B,C)080 – 16
CSPH*4812A**	0.98	0.94	58ME(B,C)080 – 16
CSPH*6012A**	0.98	0.92	58ME(B,C)080 – 16
CAP**4821A**	0.98	0.92	58ME(B,C)100 – 20
CAP**6021A**	0.98	0.90	58ME(B,C)100 – 20
CNPH*4821A**	0.98	0.92	58ME(B,C)100 – 20
CNPH*6024A**	0.98	0.90	58ME(B,C)100 – 20
CNPV*4821A**	0.98	0.92	58ME(B,C)100 – 20
CSPH*4812A**	0.98	0.92	58ME(B,C)100 – 20
CSPH*6012A**	0.98	0.90	58ME(B,C)100 – 20
CAP**4824A**	0.98	0.92	58ME(B,C)120 – 20
CAP**6024A**	0.98	0.90	58ME(B,C)120 – 20
CNPH*4821A**	0.98	0.92	58ME(B,C)120 – 20
CNPH*6024A**	0.98	0.90	58ME(B,C)120 – 20
CNPV*4824A**	0.98	0.92	58ME(B,C)120 – 20
CNPV*6024A**	0.98	0.90	58ME(B,C)120 – 20
CSPH*4812A**	0.98	0.92	58ME(B,C)120 – 20
CSPH*6012A**	0.98	0.90	58ME(B,C)120 – 20

DETAILED COOLING CAPACITIES# CONTINUED

CA13NA048**A,B Outdoor Section With CAP**4821** Indoor Section**

COOLING INDOOR MODEL	CAPACITY	POWER	FURNACE MODEL
CNPH*6124A**	1.01	1.01	58MEC080–16
CNPH*6124A**	1.01	0.97	58MEC100–20
CAP**6025A**	1.01	0.93	58MEC120–20
CNPH*6124A**	1.01	0.97	58MEC120–20
CNPV*6124A**	1.01	0.93	58MEC120–20
CAP**4821A**	0.97	0.93	58MV(B,C)080–20
CAP**6021A**	0.98	0.92	58MV(B,C)080–20
CNPH*4821A**	0.97	0.93	58MV(B,C)080–20
CNPH*6024A**	0.99	0.93	58MV(B,C)080–20
CNPH*6124A**	1.00	1.00	58MV(B,C)080–20
CNPV*4821A**	0.97	0.93	58MV(B,C)080–20
CSPH*4812A**	0.97	0.93	58MV(B,C)080–20
CSPH*6012A**	0.99	0.93	58MV(B,C)080–20
CAP**4821A**	0.98	0.96	58MV(B,C)100–20
CAP**6021A**	1.00	0.94	58MV(B,C)100–20
CNPH*4821A**	0.98	0.96	58MV(B,C)100–20
CNPH*6024A**	1.00	0.94	58MV(B,C)100–20
CNPH*6124A**	1.01	1.01	58MV(B,C)100–20
CNPV*4821A**	0.98	0.96	58MV(B,C)100–20
CSPH*4812A**	0.98	0.96	58MV(B,C)100–20
CSPH*6012A**	1.00	0.94	58MV(B,C)100–20
CAP**4824A**	0.98	0.94	58MV(B,C)120–20
CAP**6024A**	1.00	0.94	58MV(B,C)120–20
CAP**6025A**	1.00	0.93	58MV(B,C)120–20
CNPH*4821A**	0.98	0.92	58MV(B,C)120–20
CNPH*6024A**	1.00	0.94	58MV(B,C)120–20
CNPH*6124A**	1.01	0.97	58MV(B,C)120–20
CNPV*4824A**	0.98	0.94	58MV(B,C)120–20
CNPV*6024A**	1.00	0.94	58MV(B,C)120–20
CNPV*6124A**	1.01	0.97	58MV(B,C)120–20
CSPH*4812A**	0.98	0.94	58MV(B,C)120–20
CSPH*6012A**	1.00	0.94	58MV(B,C)120–20
CAP**4817A**	0.98	1.00	58PH*070–16
CNPH*4821A**	0.98	1.00	58PH*070–16
CNPH*6024A**	1.00	1.00	58PH*070–16
CNPH*6124A**	1.00	1.00	58PH*070–16
CSPH*4812A**	0.98	0.99	58PH*070–16
CSPH*6012A**	1.00	1.00	58PH*070–16
CAP**4821A**	0.98	0.92	58PH*090–16
CAP**6021A**	1.00	0.92	58PH*090–16
CNPH*4821A**	0.98	0.92	58PH*090–16
CNPH*6024A**	1.00	0.94	58PH*090–16
CNPH*6124A**	1.01	0.97	58PH*090–16
CNPV*4821A**	0.98	0.92	58PH*090–16
CSPH*4812A**	0.98	0.92	58PH*090–16
CSPH*6012A**	1.00	0.92	58PH*090–16
CAP**4821A**	0.98	0.92	58PH*110–20
CAP**6021A**	1.00	0.92	58PH*110–20
CNPH*4821A**	0.98	0.92	58PH*110–20
CNPH*6024A**	1.00	0.92	58PH*110–20
CNPH*6124A**	1.01	0.97	58PH*110–20
CNPV*4821A**	0.98	0.92	58PH*110–20
CSPH*4812A**	0.98	0.92	58PH*110–20
CSPH*6012A**	1.00	0.92	58PH*110–20
CAP**4824A**	0.99	0.93	58PH*135–20
CAP**6024A**	1.00	0.92	58PH*135–20

COOLING INDOOR MODEL	CAPACITY	POWER	FURNACE MODEL
CAP**6025A**	1.00	0.94	58PH*135–20
CNPH*4821A**	0.99	0.93	58PH*135–20
CNPH*6024A**	1.00	0.92	58PH*135–20
CNPH*6124A**	1.01	0.97	58PH*135–20
CNPV*4824A**	0.99	0.93	58PH*135–20
CNPV*6024A**	1.00	0.92	58PH*135–20
CNPV*6124A**	1.01	0.97	58PH*135–20
CSPH*4812A**	0.99	0.93	58PH*135–20
CSPH*6012A**	1.00	0.92	58PH*135–20
CAP**4821A**	0.97	0.93	58UVB080–20
CAP**6021A**	0.98	0.92	58UVB080–20
CNPV*4821A**	0.97	0.93	58UVB080–20
CAP**4821A**	0.98	0.96	58UVB100–20
CAP**6021A**	1.00	0.94	58UVB100–20
CNPV*4821A**	0.98	0.96	58UVB100–20
CAP**4824A**	0.98	0.94	58UVB120–20
CAP**6024A**	1.00	0.94	58UVB120–20
CAP**6025A**	1.00	0.94	58UVB120–20
CNPV*4824A**	0.98	0.94	58UVB120–20
CNPV*6024A**	1.00	0.94	58UVB120–20
CNPV*6124A**	1.01	0.97	58UVB120–20
CAP**4821A**	0.98	0.94	58VLR120–20
CAP**6021A**	1.00	0.94	58VLR120–20
CNPH*4821A**	0.98	0.94	58VLR120–20
CNPH*6024A**	1.00	0.94	58VLR120–20
CNPH*6124A**	1.00	0.94	58VLR120–20
CNPV*4821A**	0.98	0.94	58VLR120–20
CSPH*4812A**	0.99	0.95	58VLR120–20
CSPH*6012A**	1.00	0.94	58VLR120–20
CAP**4821A**	0.98	0.96	58VMR120–20
CAP**6021A**	1.00	0.96	58VMR120–20
CNPH*4821A**	0.98	0.94	58VMR120–20
CNPH*6024A**	1.00	0.96	58VMR120–20
CNPH*6124A**	1.00	0.96	58VMR120–20
CNPV*4821A**	0.98	0.94	58VMR120–20
CSPH*4812A**	0.99	0.95	58VMR120–20
CSPH*6012A**	1.00	0.94	58VMR120–20
CAP**4821A**	0.97	0.94	59*N*A100V21**20
CAP**4823A**	0.97	0.93	59*N*A100V21**20
CAP**4824A**	0.97	0.93	59*N*A100V21**20
CAP**6021A**	0.99	0.95	59*N*A100V21**20
CAP**6024A**	0.99	0.95	59*N*A100V21**20
CAP**6025A**	0.99	0.95	59*N*A100V21**20
CNPH*4821A**	0.98	0.94	59*N*A100V21**20
CNPH*6024A**	0.99	0.95	59*N*A100V21**20
CNPH*6124A**	1.00	0.96	59*N*A100V21**20
CNPV*4821A**	0.98	0.94	59*N*A100V21**20
CNPV*4824A**	0.98	0.94	59*N*A100V21**20
CNPV*6024A**	0.99	0.95	59*N*A100V21**20
CNPV*6124A**	1.00	0.93	59*N*A100V21**20
CSPH*4812A**	0.98	0.94	59*N*A100V21**20
CSPH*6012A**	1.00	0.93	59*N*A100V21**20
CAP**4823A**	0.97	0.93	59*N*A120V24**22
CAP**4824A**	0.98	0.94	59*N*A120V24**22
CAP**6024A**	0.99	0.92	59*N*A120V24**22
CAP**6025A**	0.99	0.92	59*N*A120V24**22

COOLING INDOOR MODEL	CAPACITY	POWER	FURNACE MODEL
CNPH*4821A**	0.98	0.91	59*N*A120V24**22
CNPH*6024A**	0.99	0.92	59*N*A120V24**22
CNPH*6124A**	1.00	0.93	59*N*A120V24**22
CNPV*4824A**	0.98	0.91	59*N*A120V24**22
CNPV*6024A**	0.99	0.92	59*N*A120V24**22
CNPV*6124A**	1.00	0.92	59*N*A120V24**22
CSPH*4812A**	0.98	0.94	59*N*A120V24**22
CSPH*6012A**	1.00	0.92	59*N*A120V24**22
CAP**4817A**	0.98	0.96	59*P5A080E17**16
CAP**4821A**	0.97	0.97	59*P5A080E17**16
CAP**6021A**	0.99	0.95	59*P5A080E17**16
CNPH*4821A**	0.98	0.98	59*P5A080E17**16
CNPH*6024A**	0.99	0.95	59*P5A080E17**16
CNPH*6124A**	1.00	0.96	59*P5A080E17**16
CNPV*4821A**	0.98	0.98	59*P5A080E17**16
CSPH*4812A**	0.98	0.96	59*P5A080E17**16
CSPH*6012A**	1.00	0.96	59*P5A080E17**16
CAP**4821A**	0.98	0.96	59*P5A100E21**16
CAP**4823A**	0.98	0.96	59*P5A100E21**16
CAP**4824A**	0.98	0.94	59*P5A100E21**16
CAP**6021A**	1.00	0.96	59*P5A100E21**16
CAP**6024A**	1.00	0.96	59*P5A100E21**16
CAP**6025A**	1.00	0.96	59*P5A100E21**16
CNPH*4821A**	0.98	0.94	59*P5A100E21**16
CNPH*6024A**	1.00	0.96	59*P5A100E21**16
CNPH*6124A**	1.00	0.96	59*P5A100E21**16
CNPV*4821A**	0.98	0.94	59*P5A100E21**16
CNPV*4824A**	0.98	0.94	59*P5A100E21**16
CNPV*6024A**	1.00	0.96	59*P5A100E21**16
CNPV*6124A**	1.01	0.97	59*P5A100E21**16
CSPH*4812A**	0.99	0.95	59*P5A100E21**16
CSPH*6012A**	1.00	0.96	59*P5A100E21**16
CAP**4823A**	0.98	0.94	59*P5A120E24**22
CAP**4824A**	0.98	0.94	59*P5A120E24**22
CAP**6024A**	1.00	0.93	59*P5A120E24**22
CAP**6025A**	1.00	0.93	59*P5A120E24**22
CNPH*4821A**	0.99	0.95	59*P5A120E24**22
CNPH*6024A**	1.00	0.93	59*P5A120E24**22
CNPH*6124A**	1.01	0.94	59*P5A120E24**22
CNPV*4824A**	0.99	0.95	59*P5A120E24**22
CNPV*6024A**	1.00	0.93	59*P5A120E24**22
CNPV*6124A**	1.02	0.94	59*P5A120E24**22
CSPH*4812A**	0.99	0.95	59*P5A120E24**22
CSPH*6012A**	1.01	0.94	59*P5A120E24**22
CAP**4821A**	0.98	0.98	OVLAAB048112
CAP**6021A**	1.00	1.00	OVLAAB048112
CNPH*4821A**	0.98	0.98	OVLAAB048112
CNPH*6024A**	1.00	0.98	OVLAAB048112
CNPH*6124A**	1.00	0.98	OVLAAB048112
CNPV*4821A**	0.98	0.98	OVLAAB048112
CNPV*4824A**	0.98	0.98	OVLAAB048112
CNPV*6024A**	1.00	0.98	OVLAAB048112
CNPV*6124A**	1.00	0.98	OVLAAB048112
CSPH*4812A**	0.99	0.99	OVLAAB048112
CSPH*6012A**	1.00	0.98	OVLAAB048112
CNPH*4821A**	1.00	0.98	OVLAAB060154

DETAILED COOLING CAPACITIES# CONTINUED

CA13NA048**A,B Outdoor Section With CAP**4821** Indoor Section**

COOLING INDOOR MODEL	CAPACITY	POWER	FURNACE MODEL
CNPH*6024A**	1.01	0.97	OVLAAB060154
CNPH*6124A**	1.01	0.97	OVLAAB060154
CNPV*4824A**	1.00	0.98	OVLAAB060154
CNPV*6024A**	1.01	0.97	OVLAAB060154
CNPV*6124A**	1.02	0.96	OVLAAB060154
CSPH*4812A**	1.00	0.98	OVLAAB060154
CSPH*6012A**	1.01	0.97	OVLAAB060154

See notes on page 74

DETAILED COOLING CAPACITIES# CONTINUED

EVAPORATOR AIR		CONDENSER ENTERING AIR TEMPERATURES °F (°C)																	
		75 (23.9)			85 (29.4)			95 (35)			105 (40.6)			115 (46.1)			125 (51.7)		
CFM	EWB °F (°C)	Capacity MBtuh		Total System KW**	Capacity MBtuh		Total System KW**	Capacity MBtuh		Total System KW**	Capacity MBtuh		Total System KW**	Capacity MBtuh		Total System KW**	Capacity MBtuh		Total System KW**
		Total	Sens‡		Total	Sens‡		Total	Sens‡		Total	Sens‡		Total	Sens‡		Total	Sens‡	
CA13NA060****A,B Outdoor Section With CAP**6024** Indoor Section																			
1750	72 (22.2)	68.71	34.82	4.37	65.76	33.74	4.81	62.59	32.60	5.30	59.21	31.39	5.84	55.54	30.09	6.42	51.41	28.66	7.05
	67 (19.4)	63.16	43.00	4.29	60.43	41.90	4.74	57.50	40.73	5.23	54.39	39.50	5.77	51.03	38.20	6.36	47.32	36.77	6.99
	63 (17.2)††	59.15	41.80	4.24	56.59	40.69	4.68	53.84	39.50	5.18	50.92	38.26	5.72	47.79	36.96	6.31	44.36	35.54	6.95
	62 (16.7)	58.14	51.13	4.23	55.65	49.99	4.67	53.01	48.77	5.16	50.27	47.45	5.71	47.55	47.55	6.31	44.70	44.70	6.96
	57 (13.9)	56.63	56.63	4.21	54.60	54.60	4.66	52.42	52.42	5.16	50.09	50.09	5.71	47.55	47.55	6.31	44.71	44.71	6.96
2000	72 (22.2)	69.71	36.45	4.48	66.67	35.37	4.92	63.38	34.20	5.41	59.88	32.98	5.95	56.07	31.67	6.53	51.80	30.21	7.15
	67 (19.4)	64.15	45.67	4.40	61.31	44.55	4.85	58.27	43.36	5.34	55.05	42.13	5.87	51.58	40.80	6.46	47.74	39.34	7.10
	63 (17.2)††	60.14	44.30	4.35	57.47	43.18	4.79	54.61	41.98	5.28	51.60	40.73	5.82	48.36	39.39	6.42	44.82	37.93	7.06
	62 (16.7)	59.33	54.75	4.34	56.80	53.54	4.78	54.23	54.23	5.28	51.77	51.77	5.83	49.05	49.05	6.42	45.99	45.99	7.07
	57 (13.9)	58.75	58.75	4.33	56.59	56.59	4.78	54.26	54.26	5.28	51.77	51.77	5.83	49.05	49.05	6.42	46.00	46.00	7.07
2250	72 (22.2)	70.44	37.99	4.59	67.31	36.90	5.03	63.93	35.73	5.52	60.33	34.49	6.05	56.41	33.16	6.63	52.03	31.69	7.25
	67 (19.4)	64.85	48.20	4.51	61.94	47.09	4.95	58.82	45.89	5.44	55.52	44.63	5.98	51.96	43.27	6.56	48.04	41.75	7.20
	63 (17.2)††	60.84	46.68	4.45	58.11	45.56	4.90	55.17	44.34	5.39	52.08	43.07	5.93	48.77	41.69	6.52	45.14	40.17	7.16
	62 (16.7)	60.44	60.44	4.45	58.18	58.18	4.90	55.72	55.72	5.40	53.10	53.10	5.94	50.23	50.23	6.54	46.99	46.99	7.18
	57 (13.9)	60.47	60.47	4.45	58.19	58.19	4.90	55.73	55.73	5.40	53.10	53.10	5.94	50.23	50.23	6.54	47.00	47.00	7.18

COOLING INDOOR MODEL	CAPACITY	POWER	FURNACE MODEL
*CAP**6024A**	1.00	1.00	
CAP**6021A**	0.98	0.98	
CAP**6025A**	1.00	1.00	
CNPH*6024A**	0.99	1.00	
CNPH*6024A**	0.99	0.99	
CNPH*6124A**	0.99	0.99	
CNPH*6124A**	1.00	1.00	
CNPV*6024A**	1.00	1.00	
CNPV*6124A**	1.00	1.00	
CSPH*6012A**	1.00	1.00	
FB4CNF060	0.97	0.97	
FE4ANB006	1.00	0.96	
FV4CNB006	1.00	0.96	
FX4DN(B,F)061	1.00	1.00	
CAP**6021A**	0.98	0.98	58CV(A,X)110–20
CNPH*6024A**	0.97	0.97	58CV(A,X)110–20
CNPH*6124A**	0.99	0.99	58CV(A,X)110–20
CSPH*6012A**	0.98	0.97	58CV(A,X)110–20
CAP**6024A**	0.98	0.97	58CV(A,X)135–22
CAP**6025A**	0.97	0.96	58CV(A,X)135–22
CNPH*6024A**	0.98	0.97	58CV(A,X)135–22
CNPH*6124A**	0.99	0.99	58CV(A,X)135–22
CNPV*6024A**	0.98	0.97	58CV(A,X)135–22
CNPV*6124A**	1.00	1.00	58CV(A,X)135–22
CSPH*6012A**	0.98	0.97	58CV(A,X)135–22
CAP**6024A**	0.99	0.97	58CV(A,X)155–22
CAP**6025A**	0.98	0.97	58CV(A,X)155–22
CNPH*6024A**	0.99	0.97	58CV(A,X)155–22
CNPH*6124A**	0.99	0.99	58CV(A,X)155–22
CNPH*6124A**	1.00	1.00	58CV(A,X)155–22
CNPV*6024A**	0.99	0.97	58CV(A,X)155–22
CNPV*6124A**	1.00	1.00	58CV(A,X)155–22
CSPH*6012A**	0.98	0.97	58CV(A,X)155–22
CSPH*6012A**	0.98	1.02	58HDV080– –20

COOLING INDOOR MODEL	CAPACITY	POWER	FURNACE MODEL
CAP**6024A**	0.97	1.01	58HDV100– –20
CAP**6025A**	0.97	1.01	58HDV100– –20
CNPH*6024A**	0.97	1.01	58HDV100– –20
CNPH*6124A**	0.98	1.01	58HDV100– –20
CNPV*6024A**	0.97	0.99	58HDV100– –20
CNPV*6124A**	0.99	1.01	58HDV100– –20
CSPH*6012A**	0.98	1.00	58HDV100– –20
CNPH*6024A**	0.97	0.97	58ME(B,C)080–16
CNPH*6124A**	0.97	0.97	58ME(B,C)080–16
CSPH*6012A**	0.97	0.97	58ME(B,C)080–16
CAP**6021A**	0.98	0.98	58ME(B,C)100–20
CNPH*6024A**	0.98	0.98	58ME(B,C)100–20
CNPH*6124A**	0.97	0.97	58ME(B,C)100–20
CSPH*6012A**	0.98	0.98	58ME(B,C)100–20
CAP**6024A**	0.97	0.96	58ME(B,C)120–20
CAP**6025A**	0.97	0.96	58ME(B,C)120–20
CNPH*6024A**	0.98	0.98	58ME(B,C)120–20
CNPH*6124A**	0.98	0.98	58ME(B,C)120–20
CNPV*6024A**	0.98	0.98	58ME(B,C)120–20
CNPV*6124A**	0.99	0.97	58ME(B,C)120–20
CSPH*6012A**	0.98	0.97	58ME(B,C)120–20
CNPH*6124A**	0.99	0.99	58MEC080–16
CNPH*6124A**	0.99	0.99	58MEC100–20
CAP**6024A**	0.98	0.98	58MEC120–20
CNPH*6124A**	0.99	0.99	58MEC120–20
CNPV*6124A**	1.00	1.00	58MEC120–20
CNPV*6124A**	1.00	1.00	58MEC120–20
CNPH*6024A**	0.97	1.00	58MV(B,C)100–20
CNPH*6124A**	0.97	1.01	58MV(B,C)100–20
CSPH*6012A**	0.97	0.99	58MV(B,C)100–20
CAP**6024A**	0.97	0.97	58MV(B,C)120–20
CAP**6025A**	0.97	0.97	58MV(B,C)120–20
CNPH*6024A**	0.97	0.97	58MV(B,C)120–20
CNPH*6124A**	0.97	0.97	58MV(B,C)120–20

COOLING INDOOR MODEL	CAPACITY	POWER	FURNACE MODEL
CNPV*6024A**	0.97	0.97	58MV(B,C)120–20
CNPV*6124A**	0.99	0.99	58MV(B,C)120–20
CSPH*6012A**	0.97	0.97	58MV(B,C)120–20
CAP**6021A**	0.98	0.97	58PH*110–20
CNPH*6024A**	0.98	0.97	58PH*110–20
CNPH*6124A**	0.99	0.99	58PH*110–20
CSPH*6012A**	0.98	0.97	58PH*110–20
CAP**6024A**	0.97	0.97	58PH*135–20
CAP**6025A**	0.97	0.97	58PH*135–20
CNPH*6024A**	0.98	0.97	58PH*135–20
CNPH*6124A**	0.98	0.98	58PH*135–20
CNPH*6124A**	0.99	0.99	58PH*135–20
CNPV*6024A**	0.97	0.96	58PH*135–20
CNPV*6124A**	1.00	1.00	58PH*135–20
CSPH*6012A**	0.98	0.97	58PH*135–20
CAP**6024A**	0.97	0.97	58UVB120–20
CAP**6025A**	0.97	0.99	58UVB120–20
CNPV*6024A**	0.97	0.97	58UVB120–20
CNPV*6124A**	0.99	0.99	58UVB120–20
CNPV*6124A**	1.00	1.00	58UVB120–20
CAP**6021A**	0.97	0.97	58VLR120–20
CNPH*6024A**	0.97	0.97	58VLR120–20
CNPH*6124A**	0.98	0.98	58VLR120–20
CSPH*6012A**	0.98	0.98	58VLR120–20
CNPH*6024A**	0.97	1.01	58VMR120–20
CNPH*6124A**	0.97	1.01	58VMR120–20
CSPH*6012A**	0.98	1.00	58VMR120–20
CAP**6024A**	0.99	0.96	59*N*A120V24**22
CAP**6025A**	0.99	0.96	59*N*A120V24**22
CNPH*6024A**	0.99	0.96	59*N*A120V24**22
CNPH*6124A**	1.00	0.97	59*N*A120V24**22
CNPV*6024A**	0.99	0.96	59*N*A120V24**22
CNPV*6124A**	1.01	0.96	59*N*A120V24**22
CSPH*6012A**	1.00	0.96	59*N*A120V24**22

DETAILED COOLING CAPACITIES# CONTINUED

CA13NA060**A,B Outdoor Section With CAP**6024** Indoor Section**

COOLING INDOOR MODEL	CAPACITY	POWER	FURNACE MODEL
CAP**6024A**	0.99	0.96	59*P5A120E24**22
CAP**6025A**	0.99	0.96	59*P5A120E24**22
CNPH*6024A**	0.99	0.96	59*P5A120E24**22
CNPH*6124A**	1.00	0.97	59*P5A120E24**22
CNPV*6024A**	0.99	0.96	59*P5A120E24**22
CNPV*6124A**	1.01	0.97	59*P5A120E24**22
CSPH*6012A**	1.00	0.96	59*P5A120E24**22

† Total and sensible capacities are net capacities. Blower motor heat has been subtracted.
‡ Sensible capacities shown are based on 80°F (27°C) entering air at the indoor coil. For sensible capacities at other than 80°F (27°C), deduct 835 Btuh (245 kW) per 1000 CFM (480 L/S) of indoor coil air for each degree below 80°F (27°C), or add 835 Btuh (245 kW) per 1000 CFM (480 L/S) of indoor coil air per degree above 80°F (27°C).
# Detailed cooling capacities are based on indoor and outdoor unit at the same elevation per AHRI standard 210/240–2008. If additional tubing length and/or indoor unit is located above outdoor unit, a slight variation in capacity may occur.
** System kw is total of indoor and outdoor unit kilowatts.
†† At TVA rating indoor condition (75°F edb/63°F ewb). All other indoor air temperatures are at 80°F edb.
NOTE: When the required data falls between the published data, interpolation may be performed. Extrapolation is not an acceptable practice.
EWB — Entering Wet Bulb

CONDENSER ONLY RATINGS

SST °F (°C)		CONDENSER ENTERING AIR TEMPERATURES °F (°C)							
		55 (12.78)	65 (18.33)	75 (23.89)	85 (29.44)	95 (35.0)	105 (40.56)	115 (46.11)	125 (51.67)
CA13NA018**(A,B)**									
30 (−1.11)	TCG	16.10	15.20	14.20	13.30	12.30	11.30	10.20	9.10
	SDT	70.80	80.40	89.90	99.50	109.10	118.80	128.60	138.50
	KW	0.83	0.95	1.09	1.24	1.40	1.57	1.76	1.95
35 (1.67)	TCG	17.70	16.70	15.70	14.70	13.70	12.60	11.50	10.30
	SDT	71.90	81.40	90.90	100.40	109.90	119.60	129.40	139.10
	KW	0.83	0.95	1.09	1.24	1.40	1.58	1.77	1.97
40 (4.44)	TCG	19.50	18.40	17.40	16.20	15.10	14.00	12.80	11.50
	SDT	73.00	82.50	91.90	101.30	110.80	120.40	130.10	139.70
	KW	0.83	0.95	1.09	1.23	1.40	1.58	1.77	1.98
45 (7.22)	TCG	21.30	20.20	19.00	17.90	16.70	15.40	14.20	12.80
	SDT	74.20	83.60	93.00	102.30	111.70	121.20	130.70	140.30
	KW	0.83	0.95	1.08	1.23	1.40	1.58	1.78	1.99
50 (10.0)	TCG	23.30	22.00	20.80	19.50	18.20	16.90	15.60	14.20
	SDT	75.40	84.80	94.10	103.40	112.60	122.00	131.40	140.90
	KW	0.82	0.95	1.08	1.23	1.40	1.58	1.78	1.99
55 (12.78)	TCG	25.20	23.90	22.50	21.20	19.80	18.50	17.00	15.50
	SDT	76.70	86.00	95.20	104.40	113.60	122.90	132.20	141.50
	KW	0.82	0.94	1.08	1.23	1.39	1.58	1.78	1.99
CA13NA024**(A,B)**									
30 (−1.11)	TCG	21.30	20.10	18.90	17.70	16.50	15.20	14.00	12.60
	SDT	73.00	82.40	91.80	101.20	110.60	120.20	129.80	139.40
	KW	1.06	1.21	1.37	1.56	1.77	1.99	2.24	2.51
35 (1.67)	TCG	23.40	22.10	20.90	19.60	18.20	16.90	15.50	14.10
	SDT	74.40	83.60	93.00	102.30	111.70	121.10	130.60	140.20
	KW	1.06	1.21	1.38	1.57	1.77	2.00	2.25	2.52
40 (4.44)	TCG	25.60	24.20	22.90	21.50	20.00	18.60	17.10	15.60
	SDT	75.80	85.00	94.20	103.50	112.70	122.10	131.50	140.90
	KW	1.07	1.22	1.39	1.58	1.78	2.01	2.26	2.53
45 (7.22)	TCG	27.90	26.40	24.90	23.40	21.90	20.40	18.80	17.10
	SDT	77.30	86.30	95.50	104.70	113.80	123.10	132.30	141.60
	KW	1.08	1.23	1.40	1.58	1.79	2.02	2.27	2.54
50 (10.0)	TCG	30.20	28.60	27.00	25.40	23.70	22.10	20.40	18.60
	SDT	78.80	87.80	96.80	105.90	114.90	124.10	133.30	142.40
	KW	1.09	1.24	1.40	1.59	1.80	2.03	2.28	2.55
55 (12.78)	TCG	32.60	30.80	29.10	27.30	25.60	23.90	22.10	20.20
	SDT	80.30	89.20	98.20	107.10	116.10	125.20	134.20	143.10
	KW	1.09	1.25	1.41	1.60	1.81	2.03	2.28	2.55
CA13NA030**(A,B)**									
30 (−1.11)	TCG	25.40	24.00	22.60	21.10	19.60	18.00	16.40	14.60
	SDT	74.40	83.60	92.90	102.10	111.40	120.80	130.20	139.60
	KW	1.35	1.52	1.70	1.91	2.13	2.37	2.63	2.89
35 (1.67)	TCG	28.00	26.50	24.90	23.40	21.70	20.00	18.30	16.40
	SDT	75.90	85.00	94.20	103.40	112.60	121.90	131.20	140.50
	KW	1.35	1.52	1.71	1.92	2.15	2.39	2.65	2.92
40 (4.44)	TCG	30.70	29.10	27.40	25.70	24.00	22.20	20.30	18.40
	SDT	77.40	86.50	95.60	104.70	113.80	123.00	132.20	141.40
	KW	1.35	1.53	1.72	1.93	2.15	2.40	2.67	2.95
45 (7.22)	TCG	33.50	31.80	30.00	28.20	26.30	24.40	22.40	20.30
	SDT	79.00	88.00	97.00	106.10	115.10	124.20	133.30	142.30
	KW	1.36	1.53	1.72	1.93	2.16	2.42	2.69	2.97
50 (10.0)	TCG	36.50	34.60	32.70	30.70	28.70	26.70	24.60	22.30
	SDT	80.70	89.70	98.50	107.50	116.40	125.40	134.30	143.20
	KW	1.36	1.54	1.73	1.94	2.17	2.43	2.70	2.99
55 (12.78)	TCG	39.50	37.40	35.30	33.20	31.10	29.00	26.70	24.30
	SDT	82.40	91.30	100.10	108.90	117.80	126.60	135.40	144.20
	KW	1.37	1.54	1.74	1.95	2.18	2.44	2.71	3.00
CA13NA036**(A,B)**									
30 (−1.11)	TCG	30.30	28.80	27.20	25.50	23.80	22.00	20.00	18.00
	SDT	73.20	82.20	91.40	100.60	109.90	119.10	128.40	137.80
	KW	1.65	1.85	2.07	2.30	2.57	2.88	3.25	3.68
35 (1.67)	TCG	33.50	31.80	30.10	28.30	26.40	24.40	22.30	20.10
	SDT	74.80	83.80	92.80	102.00	111.10	120.30	129.50	138.70
	KW	1.66	1.87	2.08	2.32	2.59	2.90	3.26	3.69
40 (4.44)	TCG	37.00	35.10	33.20	31.20	29.20	27.00	24.80	22.40
	SDT	76.60	85.40	94.40	103.40	112.40	121.50	130.60	139.70
	KW	1.68	1.89	2.10	2.34	2.61	2.92	3.28	3.70
45 (7.22)	TCG	40.70	38.60	36.50	34.30	32.10	29.80	27.40	24.80
	SDT	78.50	87.20	96.00	104.90	113.80	122.80	131.80	140.80
	KW	1.70	1.91	2.13	2.37	2.63	2.94	3.30	3.72
50 (10.0)	TCG	44.60	42.30	40.00	37.70	35.30	32.80	30.20	27.40
	SDT	80.50	89.10	97.80	106.50	115.30	124.20	133.00	141.90
	KW	1.73	1.94	2.16	2.40	2.66	2.97	3.32	3.73
55 (12.78)	TCG	48.80	46.30	43.80	41.30	38.70	36.00	33.20	30.20
	SDT	82.60	91.10	99.60	108.20	116.90	125.60	134.30	143.00
	KW	1.77	1.97	2.19	2.43	2.70	3.00	3.35	3.76

See notes on page 60

CONDENSER ONLY RATINGS CONTINUED

SST °F (°C)		CONDENSER ENTERING AIR TEMPERATURES °F (°C)							
		55 (12.78)	65 (18.33)	75 (23.89)	85 (29.44)	95 (35.0)	105 (40.56)	115 (46.11)	125 (51.67)
CA13NA042**(A,B)**									
30 (−1.11)	TCG	38.00	36.00	33.90	31.90	29.70	27.60	25.30	22.90
	SDT	73.20	82.30	91.40	100.60	109.80	119.10	128.40	137.70
	KW	1.95	2.20	2.48	2.80	3.14	3.53	3.95	4.41
35 (1.67)	TCG	41.90	39.70	37.40	35.10	32.80	30.50	28.00	25.50
	SDT	74.80	83.70	92.80	101.90	111.00	120.20	129.40	138.60
	KW	1.97	2.22	2.50	2.81	3.16	3.54	3.97	4.43
40 (4.44)	TCG	46.00	43.60	41.10	38.70	36.20	33.60	30.90	28.10
	SDT	76.40	85.20	94.20	103.20	112.20	121.30	130.40	139.50
	KW	1.98	2.23	2.52	2.83	3.18	3.56	3.98	4.44
45 (7.22)	TCG	50.30	47.70	45.10	42.40	39.60	36.80	33.90	30.90
	SDT	78.10	86.90	95.70	104.60	113.50	122.50	131.40	140.40
	KW	2.01	2.26	2.54	2.85	3.19	3.58	4.00	4.45
50 (10.0)	TCG	54.90	52.10	49.20	46.20	43.20	40.20	37.00	33.60
	SDT	80.00	88.60	97.20	106.00	114.80	123.70	132.50	141.30
	KW	2.03	2.28	2.56	2.87	3.21	3.60	4.01	4.47
55 (12.78)	TCG	59.70	56.60	53.40	50.20	46.90	43.50	40.10	36.40
	SDT	81.90	90.30	98.90	107.50	116.20	124.90	133.60	142.20
	KW	2.06	2.30	2.58	2.89	3.23	3.62	4.03	4.48
CA13NA048**(A,B)**									
30 (−1.11)	TCG	41.10	38.90	36.70	34.40	32.10	29.70	27.20	24.50
	SDT	73.80	83.00	92.30	101.60	111.00	120.40	129.70	139.10
	KW	2.19	2.46	2.76	3.10	3.47	3.87	4.30	4.76
35 (1.67)	TCG	45.20	42.80	40.50	38.00	35.50	32.90	30.20	27.40
	SDT	75.30	84.40	93.70	102.90	112.20	121.50	130.80	140.00
	KW	2.22	2.49	2.79	3.13	3.50	3.90	4.34	4.81
40 (4.44)	TCG	49.60	47.10	44.50	41.90	39.20	36.40	33.50	30.40
	SDT	76.90	86.00	95.10	104.30	113.40	122.60	131.80	141.00
	KW	2.24	2.51	2.82	3.15	3.53	3.93	4.38	4.85
45 (7.22)	TCG	54.30	51.60	48.80	46.00	43.10	40.10	36.90	33.60
	SDT	78.50	87.50	96.60	105.70	114.70	123.80	132.90	142.00
	KW	2.27	2.54	2.85	3.19	3.56	3.97	4.41	4.89
50 (10.0)	TCG	59.30	56.40	53.40	50.30	47.10	43.90	40.50	36.90
	SDT	80.20	89.20	98.10	107.10	116.10	125.10	134.10	143.00
	KW	2.30	2.58	2.88	3.22	3.59	4.00	4.45	4.92
55 (12.78)	TCG	64.60	61.40	58.10	54.80	51.40	47.90	44.20	40.30
	SDT	82.10	91.00	99.80	108.70	117.50	126.40	135.20	144.00
	KW	2.34	2.61	2.92	3.25	3.63	4.04	4.48	4.96
CA13NA060**(A,B)**									
30 (−1.11)	TCG	54.90	51.90	49.00	46.00	42.90	39.80	36.50	33.10
	SDT	77.60	86.40	95.30	104.20	113.20	122.20	131.20	140.20
	KW	2.73	3.07	3.45	3.88	4.34	4.85	5.41	6.01
35 (1.67)	TCG	60.30	57.10	53.90	50.70	47.30	43.90	40.30	36.50
	SDT	79.50	88.20	97.00	105.80	114.70	123.60	132.50	141.30
	KW	2.79	3.13	3.51	3.94	4.40	4.92	5.48	6.08
40 (4.44)	TCG	66.00	62.60	59.10	55.50	51.90	48.20	44.30	40.10
	SDT	81.60	90.20	98.80	107.50	116.30	125.00	133.80	142.50
	KW	2.86	3.20	3.58	4.00	4.47	4.98	5.54	6.15
45 (7.22)	TCG	72.10	68.30	64.50	60.70	56.70	52.60	48.40	43.80
	SDT	83.80	92.20	100.70	109.30	117.90	126.50	135.10	143.60
	KW	2.93	3.27	3.65	4.08	4.54	5.06	5.61	6.21
50 (10.0)	TCG	78.50	74.40	70.20	66.00	61.60	57.20	52.50	47.50
	SDT	86.10	94.40	102.70	111.20	119.60	128.10	136.50	144.80
	KW	3.01	3.35	3.73	4.15	4.62	5.13	5.68	6.27
55 (12.78)	TCG	85.10	80.60	76.10	71.40	66.70	61.80	56.70	51.20
	SDT	88.60	96.60	104.80	113.10	121.40	129.70	137.90	146.00
	KW	3.09	3.44	3.81	4.24	4.70	5.21	5.75	6.34

* AHRI listing applies only to systems shown in Combination Ratings table.

KW – Outdoor Unit Kilowatts Only.

SDT – Saturated Temperature Leaving Compressor (°F)

SST – Saturated Temperature Entering Compressor (°F/°C)

TCG – Gross Cooling Capacity (1000 Btuh)

GUIDE SPECIFICATIONS
GENERAL

System Description

Outdoor-mounted, air-cooled, split-system air conditioner unit suitable for ground or rooftop installation. Unit consists of a hermetic compressor, an air-cooled coil, propeller-type condenser fan, and a control box. Unit will discharge supply air upward as shown on contract drawings. Unit will be used in a refrigeration circuit to match up to a packaged fan coil or coil unit.

Quality Assurance

— Unit will be rated in accordance with the latest edition of AHRI Standard 210.

— Unit will be certified for capacity and efficiency, and listed in the latest AHRI directory.

— Unit construction will comply with latest edition of ANSI/ ASHRAE and with NEC.

— Unit will be constructed in accordance with UL standards and will carry the UL label of approval. Unit will have c-UL-us approval.

— Unit cabinet will be capable of withstanding Federal Test Method Standard No. 141 (Method 6061) 500-hr salt spray test.

— Air-cooled condenser coils will be leak tested at 150 psig and pressure tested at 450 psig.

— Unit constructed in ISO9001 approved facility.

Delivery, Storage, and Handling

— Unit will be shipped as single package only and is stored and handled per unit manufacturer's recommendations.

Warranty (for inclusion by specifying engineer)

— U.S. and Canada only.

PRODUCTS

Equipment

Factory assembled, single piece, air-cooled air conditioner unit. Contained within the unit enclosure is all factory wiring, piping, controls, compressor, refrigerant charge Puron® (R-410A), and special features required prior to field start-up.

Unit Cabinet

— Unit cabinet will be constructed of galvanized steel, bonderized, and coated with a powder coat paint.

— 3 phase equipment available with dense grille only.

— Single phase equipment available with wide (W) or dense (A) grille option.

Fans

— Condenser fan will be direct-drive propeller type, discharging air upward.

— Condenser fan motors will be totally enclosed, 1-phase type with class B insulation and permanently lubricated bearings. Shafts will be corrosion resistant.

— Fan blades will be statically and dynamically balanced.

— Condenser fan openings will be equipped with coated steel wire safety guards.

Compressor

— Compressor will be hermetically sealed.

— Compressor will be mounted on rubber vibration isolators.

Condenser Coil

— Condenser coil will be air cooled.

— Coil will be constructed of aluminum fins mechanically bonded to copper tubes which are then cleaned, dehydrated, and sealed.

Refrigeration Components

— Refrigeration circuit components will include liquid-line shutoff valve with sweat connections, vapor-line shutoff valve with sweat connections, system charge of Puron® (R-410A) refrigerant, and compressor oil.

— Unit will be equipped with high-pressure switch, low pressure switch and filter drier for Puron refrigerant.

Operating Characteristics

— The capacity of the unit will meet or exceed _____ Btuh at a suction temperature of _____ °F/°C. The power consumption at full load will not exceed _____ kW.

— Combination of the unit and the evaporator or fan coil unit will have a total net cooling capacity of _____ Btuh or greater at conditions of _____ CFM entering air temperature at the evaporator at _____ °F/°C wet bulb and _____ °F/°C dry bulb, and air entering the unit at _____ °F/°C.

— The system will have a SEER of _____ Btuh/watt or greater at DOE conditions.

Electrical Requirements

— Nominal unit electrical characteristics will be _____ v, single phase, 60 hz. The unit will be capable of satisfactory operation within voltage limits of _____ v to _____ v.

— Nominal unit electrical characteristics will be _____ v, three phase, 60 hz. The unit will be capable of satisfactory operation within voltage limits of _____ v to _____ v.

— Unit electrical power will be single point connection.

— Control circuit will be 24v.

Special Features

— Refer to section of this literature identifying accessories and descriptions for specific features and available enhancements.

SYSTEM DESIGN SUMMARY

1. Intended for outdoor installation with free air inlet and outlet. Outdoor fan external static pressure available is less than 0.01-IN W.C.
2. Minimum outdoor operating air temperature without low-ambient operation accessory is 55°F (12.8°C).
3. Maximum outdoor operating air temperature is 125°F (51.7°C).
4. For reliable operation, unit should be level in all horizontal planes.
5. For interconnecting refrigerant tube lengths greater than 80 ft (23.4 m) and/or 35 ft (10.7 m) vertical differential, consult Residential Piping and Longline Guideline and Service Manual available from equipment distributor.
6. If any refrigerant tubing is buried, provide a 6 in. (152.4 mm) vertical rise to the valve connections at the unit. Refrigerant tubing lengths up to 36 in. (914.4 mm) may be buried without further consideration. Do not bury refrigerant lines longer than 36 in. (914.4 mm).
7. Use only copper wire for electric connection at unit. Aluminum and clad aluminum are not acceptable for the type of connector provided.
8. Do not apply capillary tube indoor coils to these units.
9. Factory-supplied filter drier must be installed.

Copyright 2012 Carrier Corp. • 7310 W. Morris St. • Indianapolis, IN 46231

Edition Date: 09/12

Catalog No: CA13NA-03PD

Manufacturer reserves the right to change, at any time, specifications and designs without notice and without obligations.

Replaces: CA13NA-02PD