D5FSFAH

Owner's Manual

Floor Console Unit Ductless System - Sizes 09K to 16K

TABLE OF CONTENTS

PAGE

A NOTE ABOUT SAFETY 2
GENERAL 2
FCC 6
PARTS 8
WIRELESS REMOTE CONTROL 9
REMOTE CONTROL 11
REMOTE CONTROL FUNCTIONS 13
CLEANING, MAINTENANCE AND TROUBLESHOOTING 17
TROUBLESHOOTING 19

NOTE TO EQUIPMENT OWNER:

Please read this Owner's Information Manual carefully before installing and using this appliance and keep this manual for future reference.
For your convenience, please record the model and serial numbers of your new equipment in the spaces provided. This information, along with the installation data and dealer contact information, will be helpful should your system require maintenance or service.

UNIT INFORMATION
Model # _____

Serial # _____

INSTALLATION INFORMATION
Date Installed _____

DEALERSHIP CONTACT INFORMATION
Company Name: _____

Address:_____

Phone Number:_____

Technician Name:_____

Specifications subject to change without notice.

A NOTE ABOUT SAFETY

Any time you see this symbol ⚠ in manuals, instructions and on the unit, be aware of the potential for personal injury. **There are 3 levels of precaution**:

DANGER identifies the most serious hazards which results in severe personal injury or death. **WARNING** signifies hazards that could result in personal injury or death. **CAUTION** is used to identify unsafe practices which could result in minor personal injury or product and property damage.

NOTE is used to highlight suggestions which results in enhanced installation, reliability, or operation.

The following symbols may be seen on the unit.

Table 1 —Symbols displayed on the indoor unit or outdoor unit

A2L	WARNING	This symbol shows that this appliance used a flammable refrigerant. If the refrigerant is leaked and exposed to an external ignition source, there is a risk of fire.
	CAUTION	This symbol shows that the operation manual should be read carefully.
	CAUTION	This symbol shows that a service personnel should be handling this equipment with reference to the installation manual.
	CAUTION	
	CAUTION	This symbol shows that information is available such as the operating manual or installation manual.

⚠ WARNING

PERSONAL INJURY, DEATH AND / OR PROPERTY DAMAGE HAZARD
Failure to follow this warning could result in personal injury, death or property damage.
Improper installation, adjustment, alteration, service, maintenance, or use can cause explosion, fire, electrical shock, or other conditions which may cause personal injury or property damage. Consult a qualified installer, service agency, or your distributor or branch for information or assistance. The qualified installer or service agency must use factory−authorized kits or accessories when modifying this product.
Read and follow all instructions and warnings, including labels shipped with or attached to unit before operating your new air conditioner.

⚠ WARNING

FOR FLAMMABLE REFRIGERANTS
Do not use means to accelerate the defrosting process or to clean, other than those recommended by the manufacturer.
The appliance shall be stored in a room without continuously operating ignition sources (for example: open flames, an operating gas appliance or an operating electric heater).
Do not pierce or burn.
Be aware that refrigerants may not contain an odor.

R-454B Refrigerant Safety Group A2L **R-454B**

WARNING – Risk of Fire due to Flammable Refrigerant Used. Follow Handling Instructions Carefully in Compliance with National Regulations

⚠ WARNING

This appliance is not intended for use by persons (including children) with reduced physical, sensory or mental capabilities, or lack of experience and knowledge, unless they have been given supervision or instruction concerning use of the appliance by a person responsible for their safety. Children should be supervised to ensure that they do not play with the appliance.

GENERAL

The floor console fan coil unit provides quiet, maximum comfort.
In addition to cooling and/or heating, the floor console fan coil unit matched with an outdoor condensing unit filters and dehumidifies the air in the room to provide maximum comfort.
IMPORTANT: The floor console fan coil unit should be installed by authorized personnel only; using approved tubing and accessories. If technical assistance, service or repair is needed, contact the installer.
The floor console fan coil unit can be set up and operated from the remote control (provided). If the remote is misplaced, the system can be operated from the **AUTO** setting on the unit.

Operating Modes

The floor console unit has five operating modes:

- **FAN Only**
- **AUTO**
- **HEATING**
- **COOLING**
- **DEHUMIDIFICATION (DRY)**

FAN Only
In the **FAN Only** mode, the system filters and circulates the room air without changing room air temperature.

AUTO
In the **AUTO** mode, the system automatically cools or heats the room according to the user-selected set point.

NOTE: AUTO mode is recommended for use on single zone applications **ONLY**. Using **AUTO CHANGEOVER** on multi-zone applications could set an indoor unit to **STANDBY** mode, indicated with two dashes (--) on the display, which will turn off the indoor unit until all the indoor units are in the same mode (**COOLING** or **HEATING**). **HEATING** is the system's priority mode. Simultaneous **HEATING** and **COOLING** is not allowed.

HEATING

In the **HEATING** mode, the system heats and filters the room air.

COOLING

In the **COOLING** mode, the system cools, dries and filters the room air.

DEHUMIDIFICATION (DRY)

In DEHUMIDIFICATION mode, the system dries, filters and slightly cools the room air temperature. This mode prioritizes air dehumidification but it does not take the place of a dehumidifier.

1. **Installation (where refrigerant pipes are allowed)**
   –Any person who is involved with working on or breaking into a refrigerant circuit should hold a current valid certificate from an industry-accredited assessment authority, which authorizes their competence to handle refrigerants safely in accordance with an industry recognized assessment specification.
   –Maintenance and repair requiring the assistance of other skilled personnel shall be carried out under the supervision of the person competent in the use of flammable refrigerants.
   –That the installation of pipe-work shall be kept to a minimum.
   –That pipe-work shall be protected from physical damage.
   –Where refrigerant pipes shall be compliance with national gas regulations.
   –That mechanical connections shall be accessible for maintenance purposes.
   –Be more careful that foreign matter (oil, water, etc) does not enter the piping. Also, when storing the piping, securely seal the opening by pinching, taping, etc.
   –Appliance shall be stored in a well ventilated area where the room size corresponds to the room area as specific for operation.
   –Joints shall be tested with detection equipment with a capability of 1/8 oz (5g)/year of refrigerant or better, with the equipment in standstill and under operation or under a pressure of at least these standstill or operation conditions after installation.
   –In cases that require mechanical ventilation, ventilation openings shall be kept clear of obstruction.

   LEAK DETECTION SYSTEM installed. Unit must be powered except for service. For the unit with refrigerant sensor, when the refrigerant sensor detects refrigerant leakage, the indoor unit will display a error code and emit a buzzing sound, the compressor of outdoor unit will immediately stop, and the indoor fan will start running. The service life of the refrigerant sensor is 15 years. When the refrigerant sensor malfunctions, the indoor unit will display the error code FHCC. The refrigerant sensor can not be repaired and can only be replaced by the manufacture. It shall only be replaced with the sensor specified by the manufacture.

2. **Because a FLAMMABLE REFRIGERANT is used**

   The requirements for installation space of appliance and/or ventilation requirements are determined according to:
   – the mass charge amount (M) used in the appliance,
   –-the installation location,
   –-the type of ventilation of the location or of the appliance.
   –-piping material, pipe routing, and installation shall include protection from physical damage in operation and service, and be in compliance with national and local codes and standards, such as ASHRAE 15, IAPMO Uniform Mechanical Code, ICC International Mechanical Code, or CSA B52. All field joints shall be accessible for inspection prior to being covered or enclosed.
   –-that protection devices, piping, and fittings shall be protected as far as possible against adverse environmental effects, for example, the danger of water collecting and freezing in relief pipes or the accumulation of dirt and debris;
   –-that piping in refrigeration systems shall be so designed and installed to minimize the likelihood of hydraulic shock damaging the system;
   –-that steel pipes and components shall be protected against corrosion with a rustproof coating before applying any insulation;
   –-that precautions shall be taken to avoid excessive vibration or pulsation;
   –-the minimum floor area of the room shall be mentioned in the form of a table or a single figure without reference to a formula;
   –-after completion of field piping for split systems, the field pipework shall be pressure tested with an inert gas and then vacuum tested prior to refrigerant charging, according to the following requirements:
   a. The minimum test pressure for the low side of the system shall be the low side design pressure and the minimum test pressure for the high side of the system shall be the high side design pressure, unless the high side of the system cannot be isolated from the low side of the system in which case the entire system shall be pressure tested to the low side design pressure.
   b. The test pressure after removal of pressure source shall be maintained for at least 1 hour with no decrease of pressure indicated by the test gauge, with test gauge resolution not exceeding 5% of the test pressure.
   c. During the evacuation test, after achieving a vacuum level specified in the manual or less, the refrigeration system shall be isolated from the vacuum pump and the pressure shall not rise above 1500 microns within 10 minutes. The vacuum pressure level shall be specified in the manual, and shall be the lessor of 500 microns or the value required for compliance with national and local codes and standards, which may vary between residential, commercial, and industrial buildings.
   –field-made refrigerant joints indoors shall be tightness tested according to the following requirements: The test method shall have a sensitivity of 1/8 oz (5g)/year of refrigerant or better under a pressure of at least 125% of the maximum allowable pressure. No leak shall be detected.

3. **Qualification of workers**

   Any maintenance, service and repair operations must be required qualification of the working personnel. Every working procedure that effects safety means shall only be carried out by competent persons that joined the training and achieved competence should be documented by a certificate. The training of these procedures is carried out by national training organizations or manufacturers that are accredited to teach the relevant national competency standards that may be set in legislation. Examples for such working procedures are:
   - breaking into the refrigerating circuit;
   - opening of sealed components;
   - opening of ventilated enclosures.

Information Servicing

1. Checks to the area
   Prior to beginning work on systems containing flammable refrigerants, safety checks are necessary to ensure that the risk of ignition is minimized. For repair to the refrigerating system, the following precautions shall be complied with prior to conducting work on the system.
2. Work procedure

Works shall be undertaken under a controlled procedure so as to minimize the risk of a flammable gas or vapor being present while the work is being performed.

3. General work area

   All maintenance staff and others working in the local area shall be instructed on the nature of work being carried out. work in confined spaces shall be avoided.

4. Checking for presence of refrigerant

   The area shall be checked with an appropriate refrigerant detector prior to and during work to ensure the technician is aware of potentially flammable atmospheres. Ensure that the leak detection equipment is suitable for use with flammable refrigerants (no sparking, adequately sealed, or intrinsically safe).

5. Presence of fire extinguisher

   If any hot work is to be conducted on the refrigeration equipment or any associated parts, appropriate fire extinguishing equipment shall be available to hand. Have a dry power or CO2 fire extinguisher adjacent to the charging area.

6. No ignition sources

   No person carrying out work in relation to a REFRIGERATING SYSTEM which involves exposing any pipe work shall use any sources of ignition in such a manner that it may lead to the risk of fire or explosion. All possible ignition sources, including cigarette smoking, should be kept sufficiently far away from the site of installation, repairing, removing and disposal, during which refrigerant can possibly be released to the surrounding space. Prior to work taking place, the area around the equipment is to be surveyed to make sure that there are no flammable hazards or ignition risks. "No Smoking" signs shall be displayed.

7. Ventilated area

   Ensure that the area is in the open or that it adequately ventilated before breaking into the system or conducting any hot work. A degree of ventilation shall continue during the period that the work is carried out. The ventilation should safely disperse any released refrigerant and preferably expel it externally into the atmosphere.

8. Checks to the refrigeration equipment

   Where electrical components are being changed, they shall be fit for the purpose and to the correct specification. At all times the manufacturer's maintenance and service guidelines shall be followed. If in doubt consult the manufacturer's technical department for assistance. The following checks shall be applied to installations using FLAMMABLE REFRIGERANTS:

- The actual refrigerant charge is in accordance with the room size within which the refrigerant containing parts are installed;
- The ventilation machinery and outlets are operating adequately and are not obstructed;
- If an indirect refrigerating circuit is being used, the secondary circuits shall be checked for the presence of refrigerant;
- Marking to the equipment continues to be visible and legible, marking and signs that are illegible shall be corrected;
- Refrigeration pipe or components are installed in a position where they are unlikely to be exposed to any substance which may corrode refrigerant containing components, unless the components are constructed of materials which are inherently resistant to being corroded or are suitably protected against being so corroded.

9. Checks to electrical devices

   Repair and maintenance to electrical components shall include initial safety checks and component inspection procedures. If a fault exists that could compromise safety, then no electrical supply shall be connected to the circuit until it is satisfactorily dealt with. If the fault cannot be corrected immediately but it is necessary to continue operation, and adequate temporary solution shall be used. This shall be reported to the owner of the equipment so all parties are advised. Initial safety checks shall include:

- That capacitors are discharged: this shall be done in a safe manner to avoid possibility of sparking
- That there no live electrical components and wiring are exposed while charging, recovering or purging the system
- That there is continuity of earth bonding

10. Sealed electrical components shall be replaced.
11. Intrinsically safe components must be replaced.
12. Cabling

    Check that cabling is not subjected to wear, corrosion, excessive pressure, vibration, sharp edges or any other adverse environmental effects. The check shall also take into account the effects of aging or continual vibration from sources such as compressors or fans.

13. Detection of flammable refrigerants

    Under no circumstances shall potential sources of ignition be used in the searching for or detection of refrigerant leaks. A halide torch (or any other detector using a naked flame) shall not be used.

    The following leak detection methods are deemed acceptable for refrigerant systems. Electronic leak detectors that have a sensitivity of 1/8 oz (5g) may be used to detect refrigerant leaks but, in the case of FLAMMABLE REFRIGERANTS, the sensitivity may not be adequate, or may need re-calibration. (Detection equipment shall be calibrated in a refrigerant-free area.) Ensure that the detector is not a potential source of ignition and is suitable for the refrigerant used. Leak detection equipment shall be set at a percentage of the LFL of the refrigerant and shall be calibrated to the refrigerant employed, and the appropriate percentage of gas (25% maximum) is confirmed.

    Leak detection fluids are also suitable for use in external leak detection.

NOTE: Examples of leak detection fluids are as follows:

- **Bubble method**
- **Fluorescent method agents**

If a leak is suspected, all naked flames shall be removed/extinguished.

If a leakage of refrigerant is found which requires brazing, all of the refrigerant shall be recovered from the system, or isolated (by means of shut off valves) in a part of the system remote from the leak. See the following instructions of removal of refrigerant.

14. Removal and evacuation

    When breaking into the refrigerant circuit to make repairs - or for any other purpose conventional procedures shall be used. However, for flammable refrigerants it is important that best practice be followed, since flammability is a consideration.

    The following procedure shall be adhered to:

    a. safely remove refrigerant following local and national regulations;
    b. evacuate;
    c. purge the circuit with nitrogen;
    d. evacuate;
    e. continuously flush or purge with nitrogen when using flame to open circuit; and open the circuit.

The refrigerant charge shall be recovered into the correct recovery cylinders. Charging must be performed by liquid charging method. For appliances containing flammable refrigerants, the system shall be purged with oxygen-free nitrogen to render the appliance safe for flammable refrigerants. This process might need to be repeated several times. Compressed air or oxygen shall not be used for purging refrigerant systems.

For appliances containing flammable refrigerants, refrigerants purging shall be achieved by breaking the vacuum in the system with oxygen-free nitrogen and continuing to fill until the working pressure is achieved, then venting to atmosphere, and finally pulling down to a vacuum (optional for A2L). This process shall be repeated until no refrigerant is within the system (optional for

A2L). When the final oxygen-free nitrogen charge is used, the system shall be vented down to atmospheric pressure to enable work to take place.

The outlet for the vacuum pump shall not be close to any potential ignition sources, and ventilation shall be available.

15. Charging procedures

    In addition to conventional charging procedures, the following requirements shall be followed:

- Works shall be undertaken with appropriate tools only. If uncertain, consult the manufacturer of the tools for use with flammable refrigerants.
- Cylinders shall be kept upright.
- Ensure that contamination of different refrigerants does not occur when using charging equipment. Hoses or lines shall be as short as possible to minimize the amount of refrigerant contained in them.
- Charging must be performed by liquid charging method.
- Ensure that the refrigeration system is grounded prior to charging the system with refrigerant.
- Label the system when charging is complete.
- Extreme care shall be taken to avoid overfilling the refrigeration system.
- Prior to recharging the system, it shall be pressure tested with oxygen free nitrogen (OFN). The system shall be leak tested on completion of charging but before commissioning. A follow up leak test shall be carried out prior to leaving the site.

16. Decommissioning

    Before carrying out this procedure, it is essential that the technician is completely familiar with the equipment and all its detail. It is recommended good practice that all refrigerants are recovered safely. Prior to the task being carried out, an oil and refrigerant sample shall be taken in case analysis is required prior to re-use of recovered refrigerant. It is essential that electrical power is available before the task is commenced.

    a. Become familiar with the equipment and its operation
    b. Isolate system electrically
    c. Before attempting the procedure, ensure the following:
        - Mechanical handling equipment is available, if required, for handling refrigerant cylinders
        - All personal protective equipment is available and being used correctly
        - The recovery process is supervised at all times by a competent person
        - Recovery equipment and cylinders conform to the appropriate standards
    d. Pump down refrigerant system, if possible.
    e. If a vacuum is not possible, make a manifold so that refrigerant can be removed from various parts of the system.
    f. Make sure that cylinder is situated on the scales before recovery takes place.
    g. Start the recovery machine and operate in accordance with instructions.
    h. Do not overfill cylinders (no more than 80% volume liquid charge).
    i. Never exceed the maximum working pressure of the cylinder.
    j. When the cylinders have been filled correctly and the process complete, make sure that the cylinders and the equipment are removed from site promptly and all isolation valves on the equipment are closed off.
    k. Recovered refrigerant shall not be charged into another refrigeration system unless it has been cleaned and checked.

17. Labeling

    Equipment shall be labeled stating that it has been decommissioned and emptied of refrigerant. The label shall be dated and signed. For appliances containing FLAMMABLE REFRIGERANTS, ensure that there are labels on the equipment stating the equipment contains FLAMMABLE REFRIGERANT.

18. Recovery

    When removing refrigerant from a system, either for servicing or decommissioning, it is recommended good practice that all refrigerants are removed safely.

    When transferring refrigerant into cylinders, ensure that only appropriate refrigerant recovery cylinders are employed. Ensure that the correct number of cylinders for holding the total system charge is available. All cylinders to be used are designated for the recovered refrigerant and labeled for that refrigerant (i. e. special cylinders for the recovery of refrigerant). Cylinders shall be complete with pressure-relief valve and associated shut-off valves in good working order. Empty recovery cylinders are evacuated and, if possible, cooled before recovery occurs.

    The recovery equipment shall be in good working order with a set of instructions concerning the equipment that is at hand and shall be suitable for the recovery of the flammable refrigerant. If in doubt, the manufacturer should be consulted. In addition, a set of calibrated weighing scales shall be available and in good working order. Hoses shall be complete with leak-free disconnect couplings and in good condition.

    The recovered refrigerant shall be processed according to local legislation in the correct recovery cylinder, and the relevant waste transfer note arranged. Do not mix refrigerants in recovery units and especially not in cylinders.

    If compressors or compressor oils are to be removed, ensure that they have been evacuated to an acceptable level to make certain that flammable refrigerant does not remain within the lubricant. The compressor body shall not be heated by an open flame or other ignition sources to accelerate this process. When oil is drained from a system, it shall be carried out safely.

19. Transportation, marking, and storage for units

    a. Transport of equipment containing flammable refrigerants.
       Compliance with the transport regulations.
    b. Marking of equipment using signs.
       Compliance with local regulations.
    c. Disposal of equipment using flammable refrigerants.
       Compliance with national regulations.
    d. Storage of equipment/appliances
       The storage of equipment should be in accordance with the manufacturer's instructions.
    e. Storage of packed (unsold) equipment
       Storage package protection should be constructed such that mechanical damage to the equipment inside the package will not cause a leak of the refrigerant charge. The maximum number of pieces of equipment permitted to be stored together will be determined by local regulations.

FCC

This device complies with part 15 of the FCC Rules. Operation is subject to the following two conditions: (1) This device may not cause harmful interference, and (2) this device must accept any interference received, including interference that may cause undesired operation.

For Class B Digital Device

NOTE: This equipment has been tested and found to comply with the limits for a Class B digital device, pursuant to part 15 of the FCC Rules. These limits are designed to provide reasonable protection against harmful interference in a residential installation. This equipment generates, uses and can radiate radio frequency energy and, if not installed and used in accordance with the instructions may cause harmful interference to radio communications. However, there is no guarantee that interference will not occur in a particular installation. If this equipment does cause harmful interference to radio or television reception, which can be determined by turning the equipment off and on, the user is encouraged to try t o correct the interference by one or more of the following measures:

- **Reorient or relocate the receiving antenna**
- **Increase the distance between the equipment and the receiver**
- **Connect the equipment into an outlet on a circuit different from that to which the receiver is connected.**
- **Consult the dealer or an experienced radio/TV technician for assistance.**

MODIFICATION: Any changes or modifications not expressly approved by the grantee of this device could void the user's authority to operate this device.

For R-454B Refrigerant Charge Amount and Minimum Room Area:

The machine you purchased may be one of the types in Table 2. The indoor and outdoor units are designed to be used together. Please check the machine you purchased. The height of the room cannot be less then 7.3ft/2.2m, and the minimum room area of operating or storage should be as specified in Table 2.

Table 2 — A (min)

hinst: Height Above Floor Level to Center of Indoor Unit / feet (meters

MC or Mrel Refrigerant Charge Amount pounds (kilograms)		≤ 7.2 (2.2)	7.5 (2.3)	7.9 (2.4)	8.5 (2.6)	9.2 (2.8)	9.8 (3.0)
	≤ 3.91 (1.776)	12 (1.10)					
	4.0 (1.8)	60 (5.53)	57 (5.29)	55 (5.07)	50 (4.68)	47 (4.34)	44 (4.05)
	4.4 (2.0)	66 (6.14)	63 (5.88)	61 (5.63)	56 (5.2)	52 (4.83)	48 (4.5)
	4.9 (2.2)	73 (6.76)	70 (6.46)	67 (6.19)	62 (5.72)	57 (5.31)	53 (4.95)
	5.3 (2.4)	79 (7.37)	76 (7.05)	73 (6.76)	67 (6.24)	62 (5.79)	58 (5.41)
	5.7 (2.6)	86 (7.99)	82 (7.64)	79 (7.32)	73 (6.76)	68 (6.27)	63 (5.86)
	6.2 (2.8)	93 (8.6)	89 (8.23)	85 (7.88)	78 (7.28)	73 (6.76)	68 (6.31)
	6.6 (3.0)	99 (9.21)	95 (8.81)	91 (8.45)	84 (7.8)	78 (7.24)	73 (6.76)
	7.1 (3.2)	106 (9.83)	101 (9.4)	97 (9.01)	90 (8.32)	83 (7.72)	78 (7.21)
	7.5 (3.4)	112 (10.44)	108 (9.99)	103 (9.57)	95 (8.84)	88 (8.2)	82 (7.66)
	7.9 (3.6)	119 (11.06)	114 (10.58)	109 (10.14)	101 (9.36)	94 (8.69)	87 (8.11)
	8.4 (3.8)	126 (11.67)	120 (11.16)	115 (10.7)	106 (9.88)	99 (9.17)	92 (8.56)
	8.8 (4.0)	132 (12.29)	126 (11.75)	121 (11.26)	112 (10.4)	104 (9.65)	97 (9.01)
	9.3 (4.2)	139 (12.9)	133 (12.34)	127 (11.82)	117 (10.91)	109 (10.14)	102 (9.46)
	9.7 (4.4)	145 (13.51)	139 (12.93)	133 (12.39)	123 (11.43)	114 (10.62)	107 (9.91)
	10.1 (4.6)	152 (14.13)	145 (13.51)	139 (12.95)	129 (11.95)	119 (11.1)	112 (10.36)
	10.6 (4.8)	159 (14.74)	152 (14.1)	145 (13.51)	134 (12.47)	125 (11.58)	116 (10.81)
	11.0 (5.0)	165 (15.36)	158 (14.69)	152 (14.08)	140 (12.99)	130 (12.07)	121 (11.26)

A-min: Required Minimum Room Area / Square Feet (Square Meters)

AREA FORMULA

Amin is the required minimum room area in ft^2 /m^2
mc is the actual refrigerant charge in the system in ft/kg
mREL is the refrigerant releasable charge in ft/kg
hinst is the height of the center of the appliance relative to the floor of the room after installation.
WARNING: The minimum room area or minimum room area of conditioned space is based on releasable charge or total system refrigerant charge.

Airflow Information

When the unit detects a refrigerant leak, the minimum airflow of the indoor unit is as follows (applicable to the units with refrigerant sensors only):

MODEL	9K	12K	16K
NOMINAL AIR VOLUME CFM (M^3/H)	442 (750)	442 (750)	500 (850)

Wireless Remote Control

The remote control transmits commands to set up and operate the system. The control has a window display panel that displays the current system status. The control can be secured to a surface when used with the mounting bracket provided.

Wired Remote Control (Optional)

Refer to the Wired Controller manual.

24V Interface (Optional)

Allows the control of the Ductless System with a third party thermostat.

PARTS

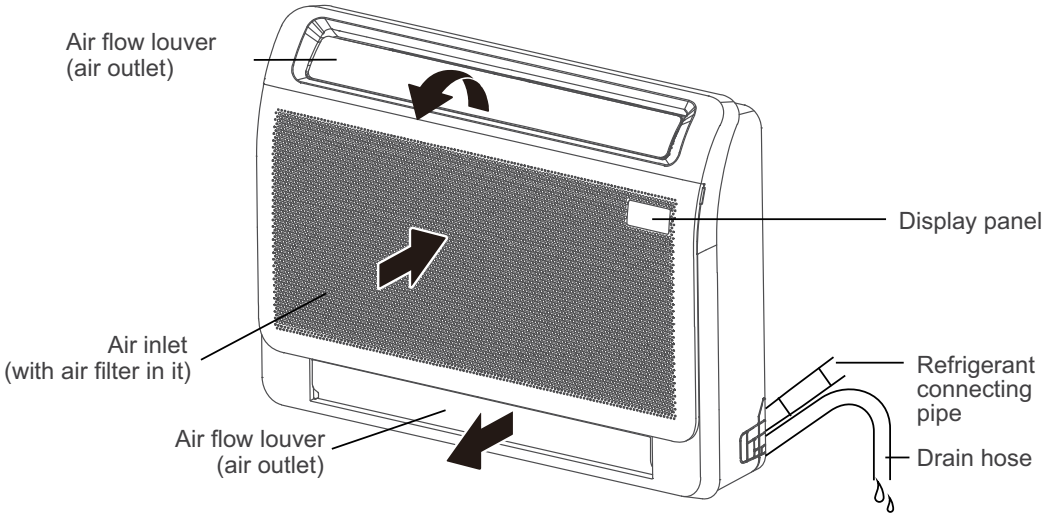

Display Panel

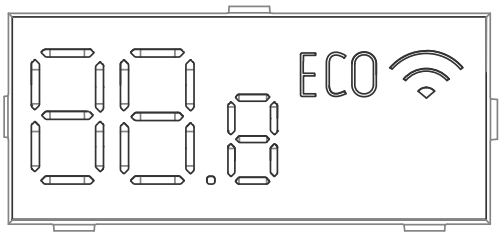

88.8 Displays temperature and Error codes.

"dF" When defrosting (for model B cooling and heating units).

"ON" For 3 seconds when:

- TIMER ON is set.
- SWING or SILENCE is turned on.

"OF" For 3 seconds when:

- TIMER OFF is set.
- SWING or SILENCE is turned off.

"CL" When Active Clean feature is turned on.

"FP" When 46°F/8°C heating feature is turned on.

ECO When ECO function is activated.

When Wireless Control feature is activated.

Fig. 1 — Parts List

WIRELESS REMOTE CONTROL

Before you begin using your new air conditioner, familiarize yourself with the remote control.

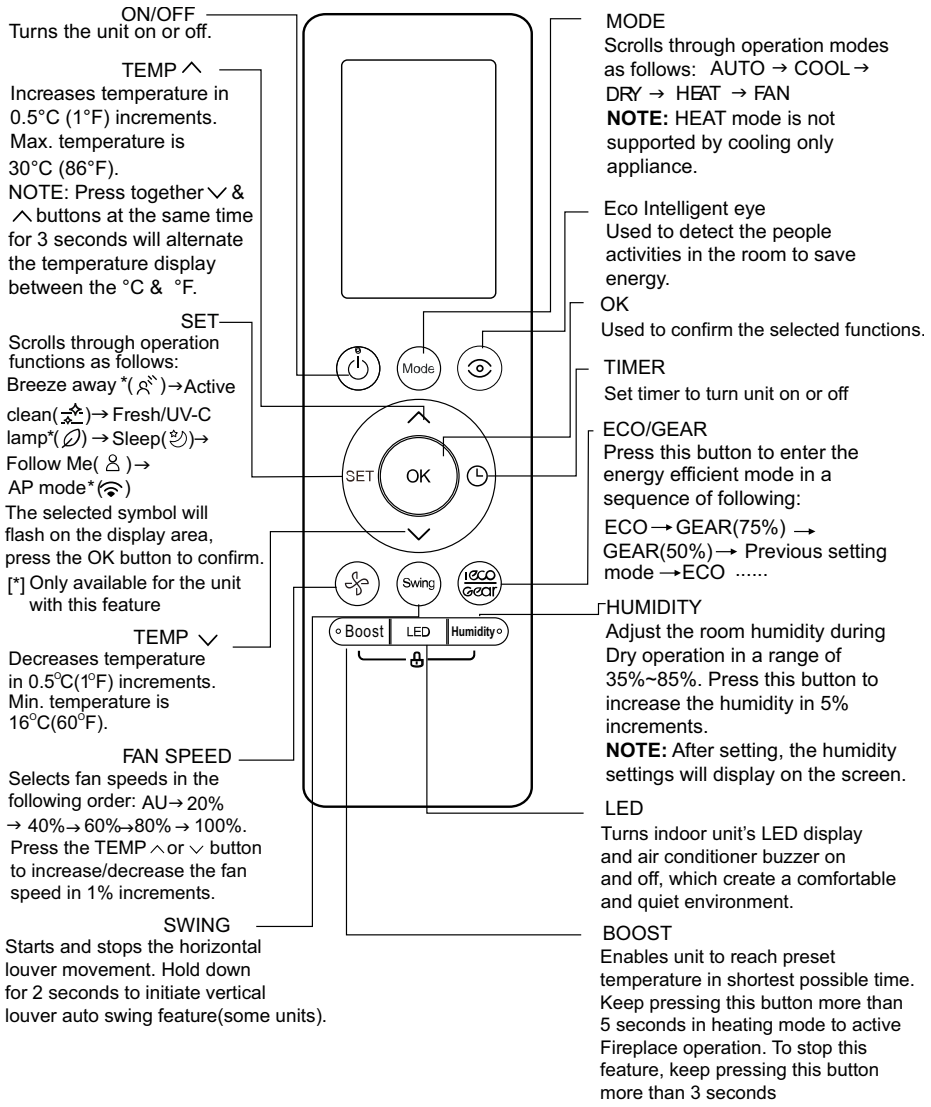

Fig. 2 — Remote Controller Functions

NOTE: For advanced functions, refer to the RG10L5(2HS)/BGEFU1 Wireless Remote Controller's Manual.

WIRELESS REMOTE CONTROL LCD SCREEN INDICATORS

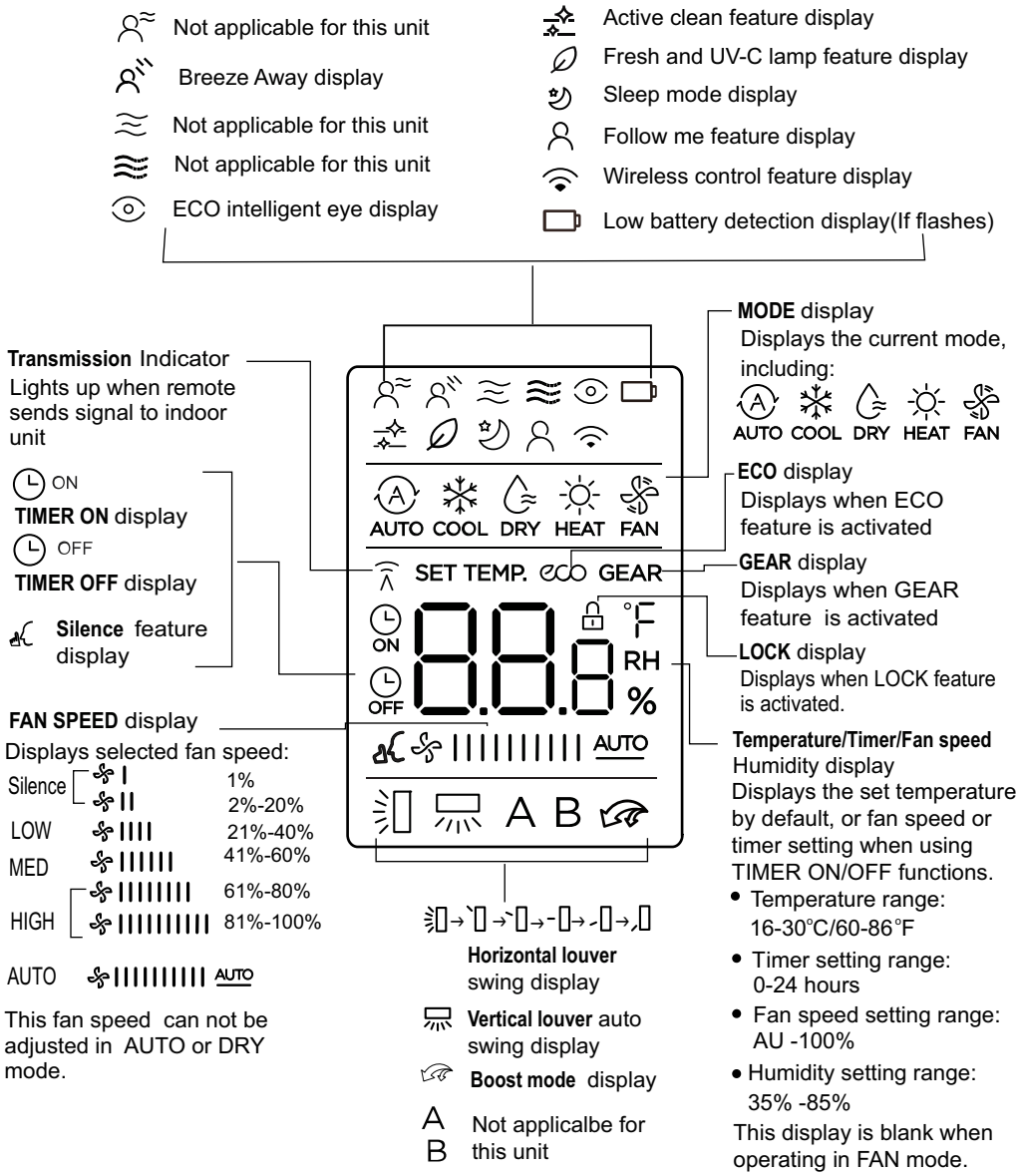

Fig. 3 — Wireless Remote Controller Indicators

REMOTE CONTROL

CAUTION

EQUIPMENT DAMAGE HAZARD
Failure to follow this caution may result in equipment damage. Handle the control with care and avoid getting the control wet.

IMPORTANT: The wireless remote control can operate the unit from a distance of up to 26 ft. (8 m) as long as there are no obstructions.

When the timer function is used, the remote control should be kept in the vicinity of the unit (within 26 ft. (8 m).

The remote control can perform the following basic functions:

- Turn the system **ON** and **OFF**
- Select the operating mode
- Adjust room air temperature set point and fan speed

Refer to the "WIRELESS REMOTE CONTROL" on page 9 for a detailed description of all the capabilities of the remote control.

Battery Installation

Two AAA 1.5v alkaline batteries (included) are required to operate the remote control.

To install or replace batteries:

1. Slide the back cover off the control to open the battery compartment.
2. Insert the batteries. Follow the polarity markings inside the battery compartment.
3. Replace the battery compartment cover.

NOTES:

1. **When replacing batteries, do not use old batteries or a different type of battery. This may cause the remote control to malfunction.**
2. **If the remote is not going to be used for several weeks, remove the batteries. Otherwise, battery leakage may damage the remote control.**
3. **The average battery life under normal use is about 6 months.**
4. **Replace the batteries when there is no audible beep from the indoor unit or if the Transmission Indicator fails to light.**
5. **When batteries are removed, the remote control erases all programmed settings. The control must be reprogrammed after the insertion of new batteries.**

Remote Control Operation - Quick Start

NOTE: When transmitting a command from the remote control to the unit, be sure to point the control toward the right side of the unit. The unit confirms receipt of a command by sounding an audible beep.

1. Turn the unit on by pushing **ON/OFF**.

   NOTE: If there is a preference for °C rather than °F (default), press and hold TEMP ∧ or TEMP ∨ together for approximately 3 seconds.
2. Select the desired mode by pushing **MODE**.

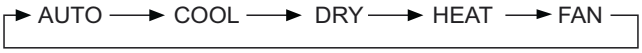

Fig. 4 — Modes

3. Select the temperature set point by pointing the control toward the unit and pressing the increase/decrease temperature set point buttons until the desired temperature appears on screen.
4. Press **FAN** to select the desired fan speed.

NOTE: If the unit is operating in DRY or AUTO mode, the fan speed will be automatically set.

5. Set the airflow direction. When the unit is turned on, the **Up-Down** airflow louvers default to the cooling or heating position. The user can adjust the horizontal **Up-Down** airflow louver position by pushing **SWING** or have continuous louver movement by pressing **SWING**.

Manual Operation

If the remote control is lost, damaged, or the batteries are exhausted, **MANUAL** can be used to run the unit. When **MANUAL** is pressed once, the **AUTO** mode takes affect (heat or cool). When this button is pressed twice, the system enters the **TEST** mode and runs for 30 minutes in the **COOLING** mode (it will run in the **AUTO** mode afterward). When pressed three times, the system turns **OFF**.

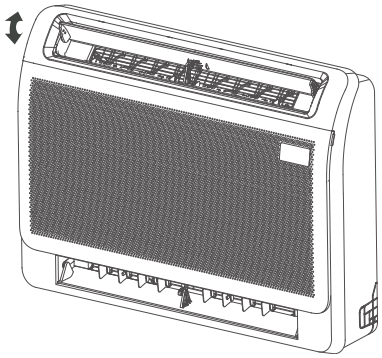

Fig. 5 — Manual Button

The set conditions of manual operation are as follows:

- Preset set point: 76°F (24°C)
- Fan speed: **AUTO**
- Discharge air direction: Pre-set position based on operation in the **COOL** or **HEAT** mode

BASIC REMOTE CONTROL OPERATION

Before operation, ensure the unit is plugged in and power is available.

COOL Mode

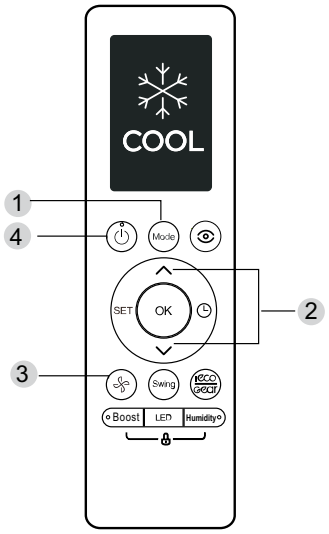

Fig. 6 — COOL Mode

1. Press **MODE** to select the **COOL** mode.
2. Set your desired temperature using **TEMP** ∧ or **TEMP** ∨**.**
3. Press **FAN** to select the fan speed in a range of AU'100%,
4. Press **ON/OFF** to start the unit.

Setting Temperature

The operating temperature range for units is 60-86°F (16-30°C)/68-82 °F (20-28°C) (depends on model). You can increase or decrease the set temperature in 1°F (0.5°C) increments.

HEAT Mode

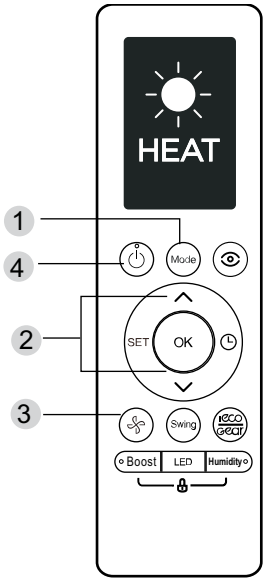

Fig. 7 — HEAT Mode

1. Press **MODE** to select the **HEAT** mode.
2. Set your desired temperature using **TEMP** ∧ or **TEMP** ∨.
3. Press **FAN** to select the fan speed in the range of AU-100%.

NOTE: As the outdoor temperature drops, the performance of your unit's HEAT function may be affected. In such instances, we recommend using this air conditioner in conjunction with other heating appliances.

AUTO Mode

In **AUTO** mode, the unit automatically selects the **COOL**, **FAN**, or **HEAT** operation based on the set temperature.

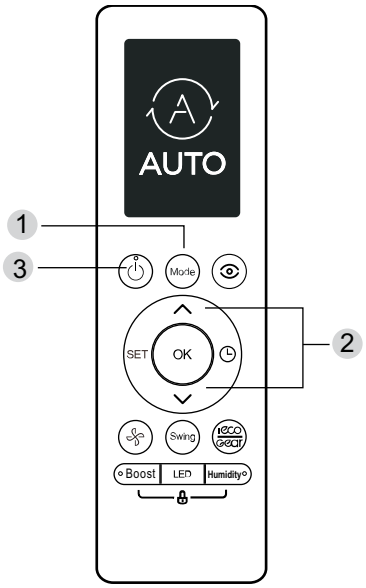

Fig. 8 — AUTO Mode

1. Press **MODE** to select **AUTO**.
2. Set your desired temperature using **TEMP** ∧ or **TEMP** ∨**.**
3. Press **ON/OFF** to start the unit.

NOTE: FAN Speed can not be set in the AUTO mode.

DRY Mode

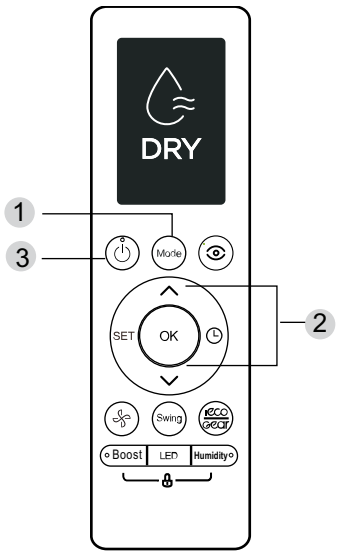

Fig. 9 — DRY Mode

1. Press **MODE** to select the **DRY** mode**.**
2. Set your desired temperature using **TEMP** ∧ or **TEMP** ∨**.**
3. Press **ON/OFF** to start the unit.

FAN Mode

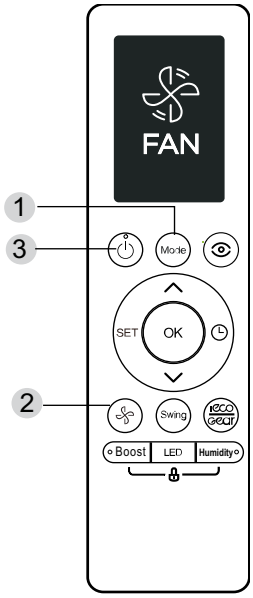

Fig. 10 — FAN Mode

1. Press **MODE** to select the **FAN** mode.
2. Press **FAN** to select the fan speed in the range of AU-100%.
3. Press **ON/OFF** to start the unit.

⚠ CAUTION

EQUIPMENT DAMAGE HAZARD
Failure to follow this caution may result in equipment damage.
Handle the controller with care and avoid getting it wet.

REMOTE CONTROL FUNCTIONS

Press ON/OFF

When the air conditioner is not in operation, the remote control displays the last set point and mode.

- **Press ON/OFF to start the unit**
  - The unit starts in the last operating mode and set point. The **ON/OFF** indicator appears.
- **Press ON/OFF to stop the unit**
  - All the indicator lights on the unit go out, and the remote control displays the set point and mode.

NOTE: If ON/OFF is pressed too soon after a stop, the compressor will not start for 3 to 4 minutes due to the inherent protection against frequent compressor cycling. The unit only emits an audible beep when the signals are received correctly.

Selecting an Operating Mode

Use **OPERATING MODE** to select one of the available modes.

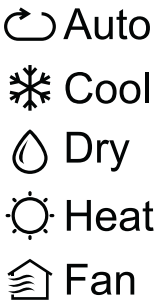

Fig. 11 — Operating Modes

Setting the Room Temperature Set Point

Press **TEMP** ∧ or **TEMP** ∨ to raise or lower the temperature. The unit confirms the signal receipt with a beep and the value of the set temperature appears on the display and changes accordingly. The temperature can be set between 62°F (17°C) and 86°F (30°C) in increments of 1°F or 1°C.

NOTE: In the COOLING mode, if the temperature selected is higher than the room temperature, the unit will not start. The same applies for the HEATING mode if the selected temperature is lower than the room temperature.

Selecting the Fan Speed

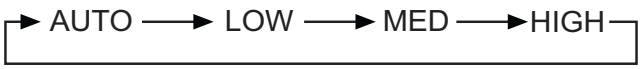

Fig. 12 — Fan Speeds

Press **FAN** to select the fan speed.

NOTE: When the unit is on, the fan runs continuously in cooling or heating. When in heating, there might be situations where the fan will slow down or shut off to prevent cold blow.

TURBO Mode

Use the **TURBO** mode to cool or heat the room rapidly. Press **TURBO** (an audible "beep" is heard if the indoor unit supports this function). The fan runs on super high speed. The **TURBO** mode terminates automatically 20 minutes after pressing **TURBO**. The mode can be terminated immediately by pressing **TURBO** again. When the **TURBO** mode is terminated, the unit reverts to the original setting.

FOLLOW ME Function

The **FOLLOW ME** function enables the remote control to measure the temperature at its current location and sends this signal to the air conditioner every 3 minutes. When using the **AUTO**, **COOL** or **HEAT** modes, measuring the ambient temperature from the remote controller (instead from the indoor unit itself) allows the air conditioner to optimize the temperature around the occupants to ensure maximum comfort.

NOTE: Press and hold BOOST for seven seconds to start/stop the FOLLOW ME MEMORY feature.

- **If the MEMORY feature is activated, "ON" appears on the display for 3 seconds.**
- **If the MEMORY feature stops, "OFF" appears on the display for 3 seconds.**

NOTE: When the FOLLOW ME Memory feature is activated, it will not be canceled by pressing ON/OFF, MODE or power failure to the indoor unit.

Active Clean Function

The Active Clean Technology washes away dust, mold, and grease that may cause odors when it adheres to the heat exchanger by automatically freezing and then rapidly thawing the frost. When this function is turned on, the indoor unit window displays "CL", after 20 to 45 minutes, the unit turns off automatically and cancels the CLEAN function.

ECO/Gear Function

Used to enter the **ENERGY EFFICIENT** mode and is only available in the **COOLING** mode. When in **COOLING** mode, press **ECO/GEAR**, the remote controller will maintain the temperature automatically between 75°F and 86°F, and set the fan speed to Auto.
Operation time in the **ECO** mode is 8 hours. After 8 hours, or if a conflicting setting is engaged, the air conditioner exits this mode.
Gear operation is engaged by cycling through the **ECO/GEAR** operations. After **ECO**, there is a setting for up to 75% and 50% of the unit's electrical consumption. The last step in the cycle is the previous unit setting before **ECO** setting is engaged again and the cycle starts over.

Selecting the Up-Down Airflow Louver Position

To optimize comfort, the horizontal louver should be adjusted to the desired position.

When COOLING

Adjust the up-down airflow louver downwards or horizontally (see Fig. 13).

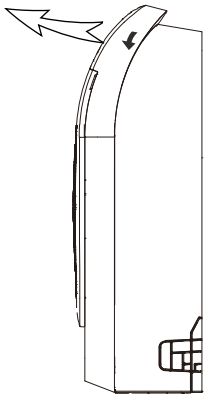

Fig. 13 — Cooling Airflow

When **HEATING**

Adjust the up−down airflow louver vertically (see Fig. 14).

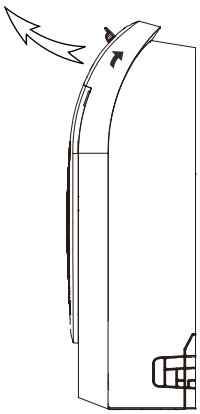

Fig. 14 — Heating Airflow

The horizontal up−down airflow louvers can be adjusted by pressing **SWING** on the remote controller. Press **SWING** to set the louvers to a stationary position or to move continuously. The up−down airflow louver position is stored in the settings, however it is deactivated when the **TURBO** or **MANUAL** settings are set, or when a power interruption takes place.

NOTE: Do not try to adjust the horizontal louver by hand. This may cause damage to the mechanism and cause condensation to form on the air outlets.

Air Direction

Press **SWING** repeatedly to choose one of the up−down airflow louver positions. Every time **SWING** is pushed, the specific louver swings 30 degrees.

In the **COOLING**, **DEHUMIDIFICATION**, and **FAN ONLY** modes, the up−down airflow louver swings in the cooling range.
In the **HEATING** mode, the louver swings in the heating range.

NOTE: Always use the remote controller to adjust the up−down airflow louver position, otherwise abnormal operation may occur. If the horizontal louver is manually adjusted out of its range, power the unit off and then back on again.

Auto Swing

While the unit is on, press **SWING** on the remote control to set the air flow direction. refer to the section of Remote control operations for details.

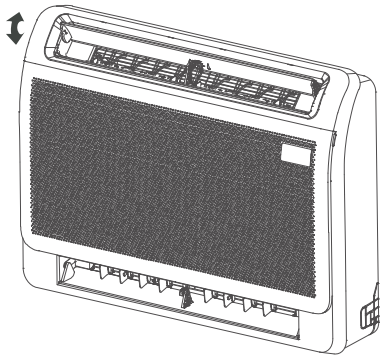

Fig. 15 — Louver Up-Down Swing

Lower Air Louver Switch Setting

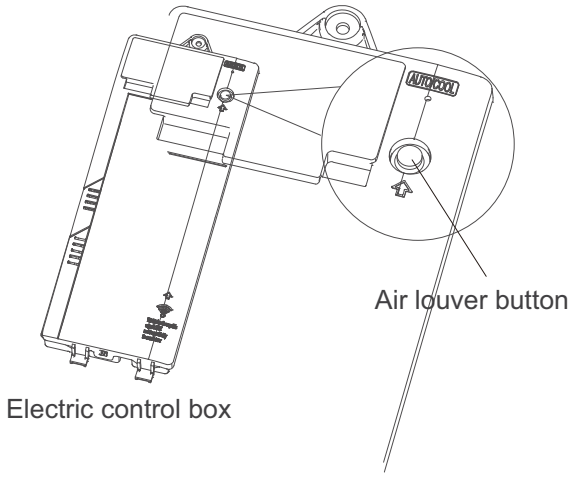

Fig. 16 — Lower Air Louver Button

For lower air discharge operation, open the lower air louver when the unit is turned on. To select whether the lower air louver is on or off, use the button on the electric control box which can be accessed by opening the front filter service door of the floor console. Within 10 minutes of power-on, press **AIR LOUVER** for 5 seconds to enter the mode in the standby state. Press it to open or close the lower air louver.

NOTE: During the setting process, the display panel displays the status of the lower air louver:

- **ON-OPEN**
- **OF-CLOSED**

Selecting Right−Left Direction of the Louver

The right-left louvers can be adjusted manually to direct the airflow to achieve optimal comfort in the space. A knob can be found on the right side and the left side of the louvers.

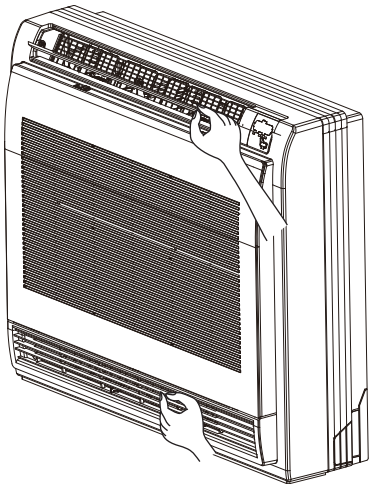

Fig. 17 — Louver Right-Left (Size 12)

CAUTION

Do not adjust the up−down airflow louver by hand. When adjusting by hand, the mechanism may not operate properly or condensation may drip from the air outlets.

AIRFLOW SELECTION

1. Open the front panel.

CAUTION

Before opening the front panel be sure to stop the operation and turn the breaker **OFF**.
Do not touch the metal parts on the inside of the indoor unit, as it may result in injury.

2. Make the airflow selection that best suits you. When setting the air flow selection, use the **Dual Air Flow** icon (see Fig. 18).

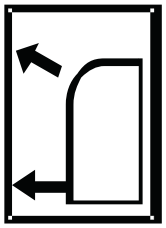

Fig. 18 — Dual Air Flow

NOTE: The air conditioner automatically determines the appropriate blowing pattern based on the operating mode or situation.

Table 3 — Operating Mode

OPERATING MODE	COOL MODE		HEAT MODE	
Situation	When the room totally cools, or when one hour has passed since turning on the air conditioner	At operation start or other times when the room is not totally cooled.	At times other than below (normal time)	At the start or when the air temp. is low.
Blowing Pattern	So air does not come into direct contact with people, air is blown from the upper air outlet, and the room temp. is equalized.	Air is blown from the upper and lower air outlets for high speed cooling during the **COOL** mode, and for filling the room with warm air during the **HEAT** mode (see Fig. 19).		To keep air from coming into direct contact with occupants, air blows from the upper air outlet.

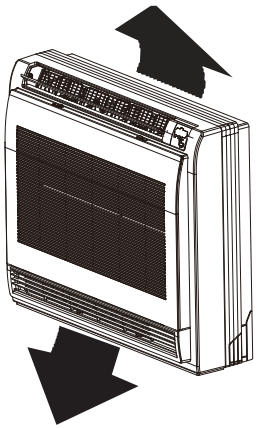

Fig. 19 — Air Blows from Upper and Lower Outlets

Air is blown from the upper air outlet during the **DRY** mode, so cold air does not come into direct contact with people.

When Setting the Air Outlet Selection Switch to Single Air Flow

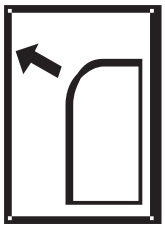

Fig. 20 — Single Air Flow

- Regardless of the operating mode or situation, air blows from the upper air outlet.
- Use this switch when you do not want air coming from the lower air outlet; for example while sleeping.

NOTE: Lower air outlet only available on size 12.

Timer Function

TIMER ON (to start the unit) and **TIMER OFF** (to stop the unit) can be used separately or together.

Timer ON Only

This function allows the unit to start automatically at the set time. The **TIMER ON** function can be set while the unit is on or off.

Unit On

1. Press **TIMER ON** to initiate the auto-on time sequence. The set time is displayed in the remote control display. Every time **TIMER ON** is pressed, the time increases by 30 minutes, up to 10h. It increases by 60 minutes, afterwards, until the time setting reaches 24h.
2. When the **TIMER ON** is set, the **TIMER** light on unit illuminates. The unit continues to run at the set time.

Unit Off

1. Set the timer described in the **UNIT ON** section. The unit starts at the set time.
2. Adjust the **TIMER ON** settings to 0.0 to cancel this option.

Timer OFF Only

This function allows the unit to stop automatically at the set time. The timer can be set while the unit is on or while it is off.

Unit On

Press **TIMER OFF** to initiate the auto-off time sequence. The set time appears on the remote control display. Every time **TIMER OFF** is pressed, the time increases by 30 minutes, up to 10h. It increases by 60 minutes, afterwards, until the time settings reach 24h.

When the **TIMER OFF** is set, the timer light on the unit illuminates and the unit turns off automatically at the set time.

Unit Off

1. Set the **TIMER OFF** as described in the **UNIT ON** section. The **TIMER** display on the unit illuminates and the unit remains off.
2. Adjust the **TIMER ON** settings to 0.0 to cancel this option.

Timer ON and Timer OFF

Use both functions to program the unit to turn on and shut off at specified times.

Unit Off

1. Set **TIMER ON** as previously described.
2. Set **TIMER OFF** as previously described. The unit starts automatically at the set **TIME ON** and turns off at the set **TIME OFF**.

Unit On

1. Set **TIME OFF** as previously described.
2. Set **TIME ON** as previously described. The unit turns off automatically at the set **TIME OFF** and turns on at the set **TIME ON**.

SLEEP Mode

SLEEP mode is used to conserve energy. The mode can be used when the unit is in the **COOL**, **HEAT** or **AUTO** mode only.

HEATING Mode

Same as the **COOLING** mode however the set points are lowered by 1.8°F (1°C).

COOLING Mode

Push **SLEEP**. After 1 hour the set point raises by 1.8°F (1°C). After another hour, the set point raises by another 1.8°F (1°C) and the fan runs in a low speed. The unit shuts off 5 hours after setting the **SLEEP** mode. **SLEEP** mode cancels if either **MODE**, **TEMP**, **FAN**, **TIMER**, or **ON/OFF** on the remote control is pressed.

TURBO Mode

Use **TURBO** to cool or heat the room rapidly.

1. Press **TURBO**. An audible "beep" is heard if the indoor unit supports this function. The fan runs on super high speed. The **TURBO** mode terminates automatically 20 minutes after selecting **TURBO**.
2. To cancel **TURBO**, select **TURBO** mode again. When the **TURBO** mode terminates, the unit reverts to the original setting.

SILENCE Mode

Press **SILENCE** on the remote controller to enable the **SILENCE** function. While this function is active, the indoor unit runs at faint breeze (1% fan speed), which reduces noise to the lowest possible level.

LED Light

Press **LED** to turn the display light on and off.

Resetting the Remote Control

If the batteries in the remote control are removed, the current settings are erased and the control returns to the initial settings and enters the **STANDBY** mode. Push **ON/OFF** to activate.

Time Delay

If **ON/OFF** is pressed too soon after a stop, the compressor will not start for 3 to 4 minutes due to the inherent protection against frequent compressor cycling. The unit only emits an audible beep when the signals are received correctly.

Heating Features

If the unit is in the **HEATING** mode, there is a delay when the fan starts. The fan starts only after the coil is warmed up to prevent cold blow.

Auto Defrost Operation

In the **HEATING** mode, if the outdoor coil is frosted, the indoor fan and outdoor fan turns off while the system removes the frost from the outdoor coil. The system automatically reverts to normal operation when frost is removed from the outdoor unit.

Auto Start

If the power fails while the unit is operating, the unit stores the operating condition, and the unit will start operation automatically under those conditions when the power is restored.

CLEANING, MAINTENANCE AND TROUBLESHOOTING

⚠ CAUTION

ELECTRICAL SHOCK HAZARD

Failure to follow this caution may result in personal injury or death. Always turn off power to the system before performing any cleaning or maintenance to the system. Turn off the outdoor disconnect switch located near outdoor unit. Be sure to disconnect the indoor unit if on a separate switch.

⚠ CAUTION

EQUIPMENT DAMAGE/OPERATION HAZARD

Failure to follow this caution may result in equipment damage or improper unit operation.

Operating the system with dirty air filters may damage the indoor unit and could cause reduced cooling performance, intermittent system operation, frost build-up on indoor coil or blown fuses.

Periodic Maintenance

Periodic maintenance is recommended to ensure proper operation of the unit. Recommended maintenance intervals may vary depending on the installation environment, e.g., dusty zones, etc. Refer to Table 4 on page 19.

⚠ CAUTION

CUT HAZARD

Failure to follow this caution may result in personal injury. The coil fins are very sharp. Use caution when cleaning.

Always wear safety protection.

Cleaning the Coil

Clean the coil at the beginning of each cooling season, or when necessary. Use a vacuum cleaner or a long-bristle brush to avoid damage to the coil fins.

Cleaning the Air Filters

Remove and clean the air filters once a month. A clogged air conditioner can reduce the cooling efficiency of your unit, and can also be bad for your health.

NOTE: If air filters show signs of excessive wear or are torn, they must be replaced. Contact your local dealer for replacement filters.

1. Pull the left and right handles of the front panel, pull the panel outward, and open the panel.

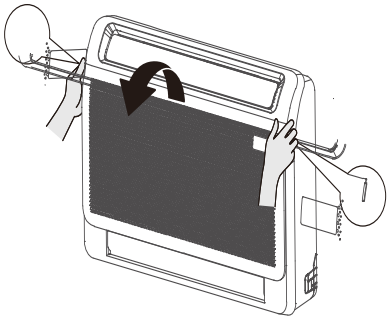

Fig. 21 — Open the front panel

2. Remove the air filter. Press the claws on the right and left sides of the air filter down slightly, then pull upward.

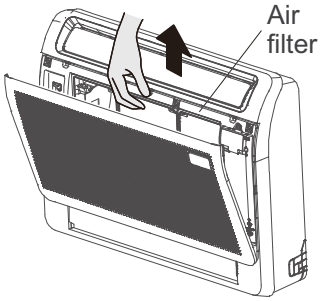

Fig. 22 — Remove the air filter

3. Remove the carbon filter. Hold the frame's tabs and remove the four claws. The carbon filter can be renewed by washing it with water once every 6 months.

NOTE: The manufacturer recommends that the carbon filter be replaced every year.

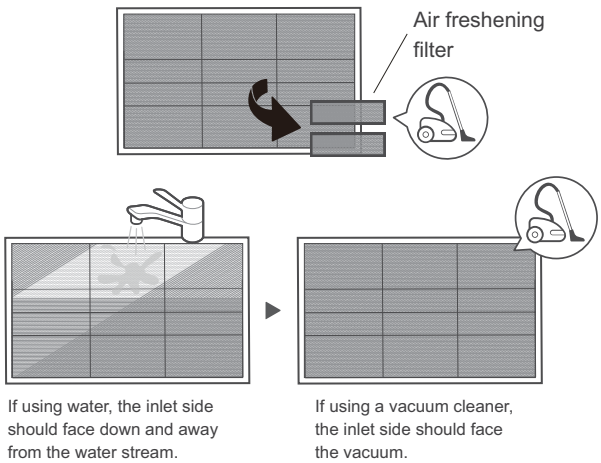

Fig. 23 — Filter

4. Clean the air filter. A vacuum cleaner or pure water may be used to clean the air filter. If the dust accumulation is excessive, please use a soft brush and mild detergent to clean it and dry out in cool place. **DO NOT** let the filter dry in direct sunlight.

IMPORTANT: The air-in side should face up when using vacuum cleaner. The air-in side should face down when using water.

5. Set the air filter and the carbon filter as they were and close the front panel. Operating the unit without the air filters may result in equipment damage or even failure as dust will accumulate inside the indoor unit.

⚠ CAUTION

EQUIPMENT DAMAGE HAZARD

Failure to follow this caution may result in equipment damage. When cleaning the front panel, do not use water hotter than 105°F (40.6°C) and do not pour water onto the fan coil.

Do not use abrasive or petroleum based cleaners as they may damage the front panel.

Indoor Unit Front Panel

To clean the front panel on the indoor unit, wipe the outside with a soft, dry cloth.

Preparing for Extended Shutdown Period

Clean the filters and reposition them in the unit. Operate the unit in **FAN ONLY** mode for 12 hours to dry all internal parts. Turn the main power supply off and remove batteries from the remote control.

System Operation Recommendations

The items outlined in the following list help to assure proper system operation:

- Replace both remote control batteries at the same time.
- Point the remote control toward the unit display panel when transmitting a command.
- Keep doors and windows closed while unit is operating.
- Contact an authorized service representative if a problem arises that cannot be easily resolved.
- Do not perform cleaning or maintenance activities while the unit is on.
- Keep the display panel on the unit away from direct sunlight and heat as this may interfere with remote control transmissions.
- Do not block air intakes and outlets on the indoor or outdoor units.

Energy Saving Recommendations

The following recommendations will add greater efficiency to the ductless system:

- Select a comfortable thermostat setting and leave it at chosen setting. Avoid continually raising and lowering the setting.
- Keep the filter clean. Frequent cleaning may be necessary depending on indoor air quality.
- Use drapes, curtains or shades to keep direct sunlight from heating the room on very hot days.
- Limit the unit's run time by using the **TIMER** function.
- Do not obstruct the air intake on the front panel.
- Turn on the air conditioning unit before the indoor air becomes too uncomfortable.

MAINTAINING YOUR UNIT

Maintenance – Long Periods of Non-Use

If you plan not to use your air conditioner for an extended period of time, perform the following tasks.

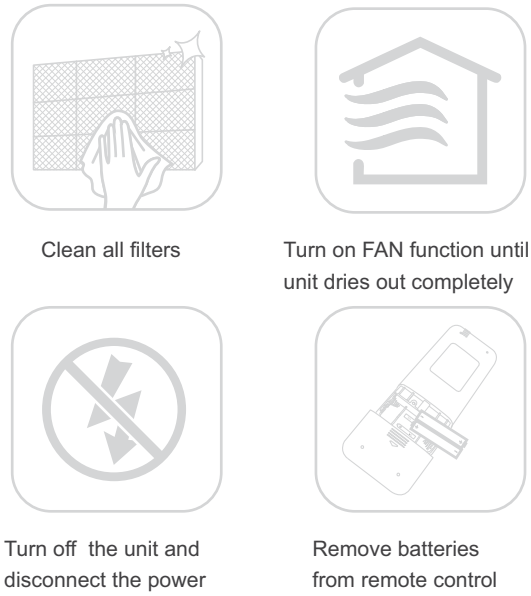

Fig. 24 — Maintenance for Non-Use

Maintenance –Pre-Season Inspection

After long periods of non-use, or before periods of frequent use, perform the following tasks.

Fig. 25 — Maintenance for Pre-Season Use

NOTE: Do not stretch or hang objects at the air outlet.

NOTE: Do not adjust the automatic air deflector by hand or extend your hand into the air duct.

NOTE: Do not cover the air inlet and outlet of the unit with objects.

TROUBLESHOOTING

⚠ CAUTION

If any of the following conditions occurs, turn off your unit immediately!

- The power cord is damaged or abnormally warm
- You smell a burning odor
- The unit emits loud or abnormal sounds
- A power fuse blows or the circuit breaker frequently trips
- Water or other objects fall into or out of the unit

DO NOT ATTEMPT TO FIX THESE YOURSELF! CONTACT AN AUTHORIZED SERVICE PROVIDER IMMEDIATELY.

Refer to Table 5 before contacting your local dealer.

Table 4 — Periodic Maintenance

INDOOR UNIT	EVERY MONTH	EVERY 6 MONTHS	EVERY YEAR
Clean Air Filter*	●		●
Replace Carbon Filter			●
Change Remote Control Batteries			●
OUTDOOR UNIT	**EVERY MONTH**	**EVERY 6 MONTHS**	**EVERY YEAR**
Clean Outdoor Coil from Outside		●	
Clean Outdoor Coil from Inside†			●
Blow Air Over Electric Parts†			●
Check Electric Connection Tightening†			●
Clean Fan Wheel†			●
Check Fan Tightening†			●
Clean Drain Pans†			●

* Increase frequency in dusty zones.
† Maintenance to be carried out by qualified service personnel. Refer to the Installation Manual.

Common Problems

Table 5 — Common Problems

PROBLEM	POSSIBLE CAUSE	SOLUTION
Unit/System Does Not Work	The circuit breaker has tripped or a fuse has blown.	Reset the circuit breaker or replace the fuse with the specified replacement fuse.
	Power failure	Restart the operation when the power is restored.
	Diagnostic lights illuminate.*	Call your service representative
	Voltage is too low.	Call your service representative.
Unit stops during operation	The **OFF** timer is not operating correctly.	Restart the operating mode.
	Diagnostic lights illuminate	Call a service representative for service

* Diagnostic lights are a combination of lights that will illuminate in the display area on the unit. They are a combination of the lights you see during normal operation.

Common Issues

The following problems are not malfunctions and in most situations will not require repairs.

Table 6 — Common Issues

Issue	Possible Causes
Unit does not turn on when pressing **ON/OFF**	The Unit has a 3-minutes protection feature that prevents the unit from overloading. The unit cannot be restarted within three minutes of being turned o.
	Cooling and Heating Models: If the Operation light and PRE-DEF (Pre-heating/Defrost) indicators are lit up, the outdoor temperature is too cold and the unit's anti-cold wind is activated in order to defrost the unit.
	In Cooling-only Models: If the "Fan Only" indicator is lit up, the outdoor temperature is too cold and the unit's anti-freeze protection is activated in order to defrost the unit.
The unit changes from **COOL/HEAT** mode to FAN mode	The unit may change its setting to prevent frost from forming on the unit. Once the temperature increases, the unit will start operating in the previously selected mode again.
	The set temperature has been reached, at which point the unit turns off the compressor. The unit will continue operating when the temperature fluctuates again.
The indoor unit emits white mist	In humid regions, a large temperature difference between the room's air and the conditioned air can cause white mist.
Both the indoor and outdoor units emit a white mist	When the unit restarts in HEAT mode after defrosting, white mist may be emitted due to moisture generated from the defrosting process.
The indoor unit makes noises	A squeaking sound is heard when the system is OFF or in COOL mode. The noise is also heard when the drain pump (optional) is in operation.
	A squeaking sound may occur after running the unit in HEAT mode due to expansion and contraction of the unit's plastic parts.
Both the indoor unit and outdoor unit make noises	Low hissing sound during operation: This is normal and is caused by refrigerant gas flowing through both indoor and outdoor units.
	Low hissing sound when the system starts, has just stopped running, or is defrosting: This noise is normal and is caused by the refrigerant gas stopping or changing direction.
	Squeaking sound: Normal expansion and contraction of plastic and metal parts caused by temperature changes during operation can cause squeaking noises.
The outdoor unit makes noises	The unit will make different sounds based on its current operating mode.
Dust is emitted from either the indoor or outdoor unit	The unit may accumulate dust during extended periods of non-use, which will be emitted when the unit is turned on. This can be mitigated by covering the unit during long periods of inactivity.
The unit emits a bad odor	The unit may absorb odors from the environment (such as furniture, cooking, cigarettes, etc.) which will be emitted during operations.
	The unit's filters have become moldy and should be cleaned.
The fan of the outdoor unit does not operate	During operation, the fan speed is controlled to optimize product operation.

Table 7 — Troubleshooting

PROBLEM	POSSIBLE CAUSES	SOLUTION
Poor Cooling Performance	Temperature setting may be higher than ambient room temperature	Lower the temperature setting
	The heat exchanger on the indoor or outdoor unit is dirty	Clean the affected heat exchanger
	The air filter is dirty	Remove the filter and clean it according to instructions
	The air inlet or outlet of either unit is blocked	Turn the unit off, remove the obstruction and turn it back on
	Doors and windows are open	Ensure all doors and windows are closed while operating the unit
	Excessive heat is generated by sunlight	Close windows and curtains during periods of high heat or bright sunshine
	Too many sources of heat in the room (people, computers, electronics, etc.)	Reduce amount of heat sources
	Low refrigerant due to leak or long-term use	Check for leaks, re-seal if necessary and top off the refrigerant
Poor Heating Performance	The filter is blocked with dust.	Clean the filter.
	The temperature is set too low.	Check the temperature and reset if necessary.
	A window or door is open	Ensure all the doors and windows are closed while operating the unit.
	The outdoor unit is obstructed.	Turn the unit off, remove the obstruction and turn the unit back on.
The unit is not working	Power failure	Wait for the power to be restored
	The power is turned off	Turn on the power
	The fuse is burned out	Replace the fuse
	Remote control batteries are dead	Replace batteries
	The unit's 3-minute protection has been activated	Wait three minutes after restarting the unit
	Timer is activated	Turn timer off
The unit starts and stops frequently	There's too much or too little refrigerant in the system	Check for leaks and recharge the system with refrigerant.
	Incompressible gas or moisture has entered the system.	Evacuate and recharge the system with refrigerant
	System circuit is blocked	Determine which circuit is blocked and replace the malfunctioning piece of equipment
	The compressor is broken	Replace the compressor
	The voltage is too high or too low	Install a manostat to regulate the voltage
Poor heating performance	The outdoor temperature is extremely low	Use auxiliary heating device
	Cold air is entering through doors and windows	Make sure that all doors and windows are closed during use
	Low refrigerant due to leak or long-term use	Check for leaks, re-seal if necessary and top off the refrigerant
Indicator lamps continue flashing	The unit may stop operation or continue to run safely. If the indicator lamps continue to flash or error codes appear, wait for about 10 minutes. The problem may resolve itself. If not, disconnect the power, then connect it again. Turn the unit on. If the problem persists, disconnect the power and contact your nearest customer service center.	
Error code appears and begins with the letters as the following in the window display of the indoor unit: E(x), P(x), F(x) EH(xx), EL(xx), EC(xx) PH(xx), PL(xx), PC(xx)		

NOTE: If your problem persists after performing the checks and diagnostics above, turn off the unit immediately and contact an authorized service center.

Table 8 — Error Codes

Display	Malfunction and Protection Indication
EC07	ODU Fan Speed Out of Control
EC51	ODU EEPROM Parameter Error
EC52	ODU Coil Temperature Sensor(T3) error
EC53	ODU Ambient Temperature Sensor (T4) Error
EC54	COMP. Discharge Temperature Sensor (TP) Error
EC56	IDU Coil Temperature Sensor (T2B) Error
ECC1	Other IDU Refrigerant Sensor Detects Leakage (Multi-zone)*
EH00	IDU EEPROM Malfunction
EH03	IDU Fan Speed Out of Control
EH0A	IDU EEPROM Parameter Error
EH0E	Water Level Alarm Malfunction
EH12	Main Unit or Secondary Units Malfunction
EH3A	External Fan DC bus voltage is too low protection
EH3b	External Fan DC bus voltage is too high fault
EH60	IDU Room Temperature (T1) Error
EH61	IDU Coil Temperature Sensor (T2) Error
EHba	Communication Error between the indoor unit and the external fan module
EHC1	Refrigerant Sensor Detects Leakage
EHC2	Refrigerant Sensor is out of range and a leak is detected
EHC3	Refrigerant Sensor is out of range*
EL01	IDU and ODU Communication Error
ELOC	System lacks refrigerant
EL11	Communication Malfunction between the main and secondary units
FH07	IDU lift panel communication failure/IDU opening and closing failure
FHCC	Refrigerant Sensor Error*
PC00	ODU IPM Module Protection
PC01	ODU Voltage Protection
PC02	Compressor To (or IPM Module Protection
PC03	Pressure Protection (Low or High Pressure)
PC04	Inverter Compressor Drive Error
PCOL	Low Ambient Temperate Protection
NOTE: The digital tube will display **FC** in the **FORCED COOLING** mode. **FC is NOT an error code.** *Applicable to the units with refrigerant sensors only.	

Table 9 — Refrigerant Leak Detection Error Codes

EHC1	Refrigerant Sensor detects a leak
EHC2	Working condition of the refrigerant sensor is out of range and a leak is detected

If you receive one of the codes in Table 9, call a technician as soon as possible. No need to panic, the unit goes into TURBO mode until the error code is cleared. There is a "beep" noise coming from the indoor unit, which is normal in this case.

For additional diagnostic information, refer to the Service Manual.

© 2024 Carrier. All rights reserved.
Edition Date:09/24

Catalog No: D5FSFAH-01OM

Replaces: NEW

Manufacturer reserves the right to change, at any time, specifications and designs without notice and without obligations.