**577C--C**
**LEGACY™ 14 SEER SINGLE-PACKAGED AIR CONDITIONER AND GAS FURNACE SYSTEM WITH PURON® (R-410A) REFRIGERANT**
**SINGLE PHASE 2-5 NOMINAL TONS (SIZES 24-60)**
**THREE PHASE 3-5 NOMINAL TONS (SIZES 36-60)**

bryant®

# Installation Instructions

**IMPORTANT**: Effective January 1, 2015, all split system and packaged air conditioners must be installed pursuant to applicable regional efficiency standards issued by the Department of Energy.

**NOTE**: Read the entire instruction manual before starting the installation.

**NOTE**: Installer: Make sure the Owner's Manual and Service Instructions are left with the unit after installation.

## TABLE OF CONTENTS


PAGE

SAFETY CONSIDERATIONS . . . . . 1
INTRODUCTION . . . . . 2
RECEIVING AND INSTALLATION . . . . . 2-12
Check Equipment . . . . . 2
Identify Unit . . . . . 2
Inspect Shipment . . . . . 2
Provide Unit Support . . . . . 2
Roof Curb . . . . . 2
Slab Mount . . . . . 2
Field Fabricate Ductwork . . . . . 3
Provide Clearances . . . . . 3
Rig and Place Unit . . . . . 3
Inspection . . . . . 3
Rigging/Lifting of Unit . . . . . 3
Connect Condensate Drain . . . . . 8
Install Flue Hood . . . . . 8
Install Gas Piping . . . . . 9
Install Duct Connections . . . . . 10
Configuring Units for Downflow (Vertical) Discharge . . . . . 10
Install Electrical Connections . . . . . 11
High-Voltage Connections . . . . . 11
Special Procedures for 208-V Operation . . . . . 11
Control Voltage Connections . . . . . 11
Standard Connection . . . . . 12
Heat Anticipator Setting . . . . . 12
Transformer Protection . . . . . 12
PRE-START-UP . . . . . 12
START-UP . . . . . 13-24
Check for Refrigerant Leaks . . . . . 13
Start-Up Heating & Make Adjustments . . . . . 13
Check Heating Control . . . . . 13
Check Gas Input . . . . . 14
Adjust Gas Input . . . . . 14
Check Burner Flame . . . . . 15
Normal Operation . . . . . 22
Airflow and Temperature Rise . . . . . 22
Heating Sequence of Operation . . . . . 22
Limit Switches . . . . . 22
Rollout Switch . . . . . 22
Start-Up Cooling & Make Adjustments . . . . . 22
Checking Cooling Control Operation . . . . . 22
Checking & Adjusting Refrigerant Charge . . . . . 23
Indoor Airflow and Airflow Adjustments . . . . . 23
Cooling Sequence of Operation . . . . . 24
MAINTENANCE . . . . . 51-54
Air Filter . . . . . 51
Indoor Blower and Motor . . . . . 51


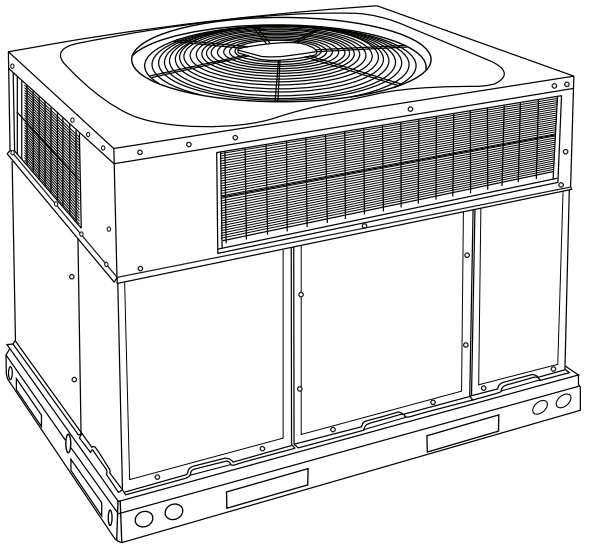


**Fig. 1 - Unit 577C--C**
**(Low NOx Model Available)**


Induced Draft (Combustion Air) Blower . . . . . 52
Flue Gas Passageways . . . . . 52
Limit Switch . . . . . 52
Burner Ignition . . . . . 52
Main Burners . . . . . 52
Removal of Gas Train . . . . . 52
Outdoor Coil, Indoor Coil, & Condensate Drain Pan . . . . 52
Outdoor Fan . . . . . 53
Electrical Controls and Wiring . . . . . 53
Refrigerant Circuit . . . . . 54
Gas Input . . . . . 54
Evaporator Airflow . . . . . 54
Puron Items . . . . . 54
TROUBLESHOOTING . . . . . 55
START-UP CHECKLIST . . . . . 55


## SAFETY CONSIDERATIONS

Improper installation, adjustment, alteration, service maintenance, or use can cause explosion, fire, electrical shock, or other conditions which may cause death, personal injury, or property damage. Consult a qualified installer, service agency, or your distributor or branch for information or assistance. The qualified installer or agency must use factory-authorized kits or accessories when modifying this product. Refer to the individual instructions packaged with the kits or accessories when installing.

Follow all safety codes. Wear safety glasses, protective clothing, and work gloves. Have a fire extinguisher available. Read these instructions thoroughly and follow all warnings or cautions included in literature and attached to the unit. consult local building codes, the current editions of the National Fuel Gas Code (NFGC) NFPA 54/ANSI Z223.1, and the National Electrical Code (NEC) NFPA 70.

In Canada refer to the current editions of the National Standards of Canada CAN/CSA-B149.1 and .2 Natural Gas and Propane Installation codes, and Canadian Electrical Code CSA C22.1

Recognize safety information. This is the safety-alert symbol ⚠. When you see this symbol on the unit and in instructions or manuals, be alert to the potential for personal injury. Understand these signal words: DANGER, WARNING, and CAUTION. These words are used with the safety-alert symbol. DANGER identifies the most serious hazards which **will** result in severe personal injury or death. WARNING signifies hazards which **could** result in personal injury or death. CAUTION is used to identify unsafe practices which **may** result in minor personal injury or product and property damage. NOTE is used to highlight suggestions which **will** result in enhanced installation, reliability, or operation.

**⚠ WARNING**

**ELECTRICAL SHOCK HAZARD**

Failure to follow this warning could result in personal injury or death.

Before installing or servicing system, always turn off main power to system and install lockout tag. There may be more than one disconnect switch. Turn off accessory heater power switch if applicable.

**⚠ WARNING**

**FIRE, EXPLOSION, ELECTRICAL SHOCK AND CARBON MONOXIDE POISONING HAZARD**

Failure to follow this warning could result in personal injury or unit damage.

A qualified installer or agency must use only factory-authorized kits or accessories when modifying this product.



# INTRODUCTION

The 577C--C unit (see Fig. 1) is a fully self-contained, combination Category I gas heating/electric cooling unit designed for outdoor installation (See Fig. 3 and 4 for unit dimensions). All unit sizes have return and discharge openings for both horizontal and downflow configurations, and are factory shipped with all downflow duct openings covered. Units may be installed either on a rooftop or on a cement slab. (See Fig. 5 for roof curb dimensions).

In gas heating mode, this unit is designed for a minimum continuous return-air temperature of 55°F (13°C) db and a maximum continuous return-air temperature of 80°F (27°C) db. Failure to follow these return-air temperature limits may affect reliability of heat exchangers, motors, and other components.

Models with an N in the 13th position of the model number are dedicated Low NOx units designed for California installations. These models meet the California maximum oxides of nitrogen (NOx) emissions requirements of 40 nanograms/joule or less as shipped from the factory and must be installed in California Air Quality Management Districts or any other regions in North America where a Low NOx rule exists.

**NOTE**: Low NOx requirements apply only to natural gas installations.

# RECEIVING AND INSTALLATION

## Step 1 — Check Equipment

### Identify Unit

The unit model number and serial number are stamped on the unit information plate. Check this information against shipping papers.

### Inspect Shipment

Inspect for shipping damage before removing packaging materials. If unit appears to be damaged or is torn loose from its anchorage, have it examined by transportation inspectors before removal. Forward claim papers directly to transportation company. Manufacturer is not responsible for any damage incurred in transit. Check all items against shipping list. Immediately notify the nearest equipment distribution office if any item is missing. To prevent loss or damage, leave all parts in original packages until installation.

If the unit is to be mounted on a curb in a downflow application, review Step 9 to determine which method is to be used to remove the downflow panels before rigging and lifting into place. The panel removal process may require the unit to be on the ground.

## Step 2 — Provide Unit Support

For hurricane tie downs, contact distributor for details and PE (Professional Engineering) Certificate if required.

### Roof Curb

Install accessory roof curb in accordance with instructions shipped with curb (See Fig. 5). Install insulation, cant strips, roofing, and flashing. Ductwork must be attached to curb.

**IMPORTANT**: The gasketing of the unit to the roof curb is critical for a water tight seal. Install gasketing material supplied with the roof curb. Improperly applied gasketing also can result in air leaks and poor unit performance.

Curb should be level to within 1/4 in. (6 mm). This is necessary for unit drain to function properly. Refer to accessory roof curb installation instructions for additional information as required.

**Installation on older "G" series roof curbs.**

Two accessory kits are available to aid in installing a new "G" series unit on an old "G" roof curb.

1. Accessory kit number CPADCURB001A00, (small chassis) and accessory kit number CPADCURB002A00, (large chassis) includes roof curb adapter and gaskets for the perimeter seal and duct openings. No additional modifications to the curb are required when using this kit.
2. An alternative to the adapter curb is to modify the existing curb by removing the outer horizontal flange and use accessory kit number CPGSKTKIT001A00 which includes spacer blocks (for easy alignment to existing curb) and gaskets for the perimeter seal and duct openings. This kit is used when existing curb is modified by removing outer horizontal flange.

**⚠ WARNING**

**UNITS/STRUCTURAL DAMAGE HAZARD**

Failure to follow this caution may result in property damage.

Ensure there is sufficient clearance for saw blade when cutting the outer horizontal flange of the roof curb so there is no damage to the roof or flashing.

### Slab Mount

Place the unit on a solid, level pad that is at least 2 in. (51 mm) above grade. The pad should extend approximately 2 in. (51 mm) beyond the casing on all 4 sides of the unit. (See Fig. 2.) Do not secure the unit to the pad *except* when required by local codes.

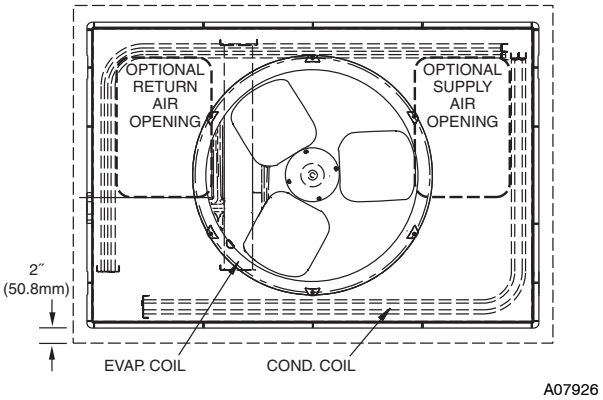


**Fig. 2 - Slab Mounting Details**

## Step 3 — Field Fabricate Ductwork

Secure all ducts to roof curb and building structure on vertical discharge units. Do not connect ductwork to unit. For horizontal applications, unit is provided with flanges on the horizontal openings. All ductwork should be secured to the flanges. Insulate and weatherproof all external ductwork, joints, and roof openings with counter flashing and mastic in accordance with applicable codes.

Ducts passing through an unconditioned space must be insulated and covered with a vapor barrier.

If a plenum return is used on a vertical unit, the return should be ducted through the roof deck to comply with applicable fire codes. Read unit rating plate for any required clearances around ductwork. Cabinet return-air static shall not exceed -.25 IN. W.C.

## Step 4 — Provide Clearances

**IMPORTANT**: The unit must be secured to the curb by installing screws through the bottom of the curb flange and into the unit base rails. When installing large base units onto the common curb, the screws must be installed before allowing the full weight of the unit to rest on the curb. A minimum of six screws are required for large base units. Failure to secure unit properly could result in an unstable unit. See Warning near Rigging/Lifting information and accessory curb instructions for more details.

The required minimum operating and service clearances are shown in Fig. 3 and 4. Adequate combustion, ventilation and condenser air must be provided.

**IMPORTANT**: Do not restrict outdoor airflow. An air restriction at either the outdoor-air inlet or the fan discharge may be detrimental to compressor life.

The condenser fan pulls air through the condenser coil and discharges it through the top grille. Be sure that the fan discharge does not recirculate to the condenser coil. Do not locate the unit in either a corner or under an overhead obstruction. The minimum clearance under a partial overhang (such as a normal house overhang) is 48-in. (1219 mm) above the unit top. The maximum horizontal extension of a partial overhang must not exceed 48-in. (1219 mm).

Do not place the unit where water, ice, or snow from an overhang or roof will damage or flood the unit. Do not install the unit on carpeting or other combustible materials. Slab-mounted units should be at least 2 in. (51 mm) above the highest expected water and runoff levels. Do not use unit if it has been under water.

## Step 5 — Rig and Place Unit

Rigging and handling of this equipment can be hazardous for many reasons due to the installation location (roofs, elevated structures, etc.).

Only trained, qualified crane operators and ground support staff should handle and install this equipment.

When working with this equipment, observe precautions in the literature, on tags, stickers, and labels attached to the equipment, and any other safety precautions that might apply.

Training for operators of the lifting equipment should include, but not be limited to, the following:

1. Application of the lifter to the load, and adjustment of the lifts to adapt to various sizes or kinds of loads.
2. Instruction in any special operation or precaution.
3. Condition of the load as it relates to operation of the lifting kit, such as balance, temperature, etc.

Follow all applicable safety codes. Wear safety shoes and work gloves.

### Inspection

Prior to initial use, and at monthly intervals, all rigging shackles, clevis pins, and straps should be visually inspected for any damage, evidence of wear, structural deformation, or cracks. Particular attention should be paid to excessive wear at hoist hooking points and load support areas. Materials showing any kind of wear in these areas must not be used and should be discarded.

**⚠ WARNING**

**UNIT FALLING HAZARD**

Failure to follow this warning could result in personal injury or death.

Never stand beneath rigged units or lift over people.

**⚠ WARNING**

**PROPERTY DAMAGE HAZARD**

Failure to follow this warning could result in personal injury/death or property damage.

When straps are taut, the clevis should be a minimum of 36 in. (914 mm) above the unit top cover.

### Rigging/Lifting of Unit (See Fig. 6)

**⚠ WARNING**

**UNIT FALLING HAZARD**

Failure to follow this warning could result in personal injury or death.

Large base units must be secured to common curb before allowing full weight of unit to rest on curb. Install screws through curb into unit base rails while rigging crane is still supporting unit.

Lifting holes are provided in base rails as shown in Fig. 3 and 4.

1. Leave top shipping skid on the unit for use as a spreader bar to prevent the rigging straps from damaging the unit. If the skid is not available, use a spreader bar of sufficient length to protect the unit from damage.
2. Attach shackles, clevis pins, and straps to the base rails of the unit. Be sure materials are rated to hold the weight of the unit (See Fig. 6).
3. Attach a clevis of sufficient strength in the middle of the straps. Adjust the clevis location to ensure unit is lifted level with the ground.

After the unit is placed on the roof curb or mounting pad, remove the top skid.

| UNIT | ELECTRICAL CHARACTERISTICS | UNIT WT. LB | UNIT WT. KG | UNIT HEIGHT IN/MM "A" | | CENTER OF GRAVITY IN/MM X | | Y | | Z | |
|---|---|---|---|---|---|---|---|---|---|---|---|
| 577CNWC24(040/060)(A/N)A | 208/230-1-60 | 304 | 138.0 | 43-3/4 | 1111 | 22-13/16 | 579.4 | 15-5/16 | 388.9 | 15-11/16 | 398.5 |
| 577CNWC30(040/060)(A/N)A | 208/230-1-60 | 336 | 152.0 | 45-3/4 | 1162 | 22-13/16 | 579.4 | 15-5/16 | 388.9 | 15-13/16 | 401.6 |
| 577C(E/N/P)WC36(060/090)(A/N)A | 208/230-1-60, 208/230-3-60, 460-3-60 | 349 | 152.0 | 51-3/4 | 1315 | 22-13/16 | 579.4 | 15-5/16 | 388.9 | 16-5/8 | 422.3 |

| UNIT | VOLTAGE | CORNER WEIGHT LB/KG "1" | | "2" | | "3" | | "4" | |
|---|---|---|---|---|---|---|---|---|---|
| 24 | 208/230 | 45.6 | 20.7 | 60.8 | 27.6 | 91.2 | 41.4 | 106.4 | 48.3 |
| 30 | 208/230 | 50.4 | 22.9 | 67.2 | 30.5 | 100.8 | 45.7 | 117.6 | 53.3 |
| 36 | 208/230/460 | 52.4 | 23.7 | 69.8 | 31.7 | 104.7 | 47.5 | 122.2 | 55.4 |

**REQUIRED CLEARANCES TO COMBUSTIBLE MATL.**

| | INCHES [MM] |
|---|---|
| TOP OF UNIT | 14 [355.6] |
| DUCT SIDE OF UNIT | 2 [50.8] |
| SIDE OPPOSITE DUCTS | 14 [355.6] |
| BOTTOM OF UNIT | 1/2 [12.7] |
| FLUE PANEL | 36 [914.4] |

**NEC. REQUIRED CLEARANCES.**

| | INCHES [MM] |
|---|---|
| BETWEEN UNITS, POWER ENTRY SIDE | 42 [1066.8] |
| UNIT AND GROUNDED SURFACES, POWER ENTRY SIDE | 36 [914.0] |
| UNIT AND BLOCK OR CONCRETE WALLS AND OTHER GROUNDED SURFACES, POWER ENTRY SIDE | 42 [1066.8] |

**REQUIRED CLEARANCE FOR OPERATION AND SERVICING**

| | INCHES [MM] |
|---|---|
| EVAP. COIL ACCESS SIDE | 36 [914.0] |
| POWER ENTRY SIDE (EXCEPT FOR NEC REQUIREMENTS) | 42 [1066.8] |
| UNIT TOP | 48 [1219.2] |
| SIDE OPPOSITE DUCTS | 36 [914.0] |
| DUCT PANEL | 12 [304.8]* |

*MINIMUM DISTANCES:IF UNIT IS PLACED LESS THAN 12 [304.8] FROM WALL SYSTEM,THEN SYSTEM PERFORMANCE MAYBE COMPROMISED.

DIMENSIONS IN [ ] ARE IN MM

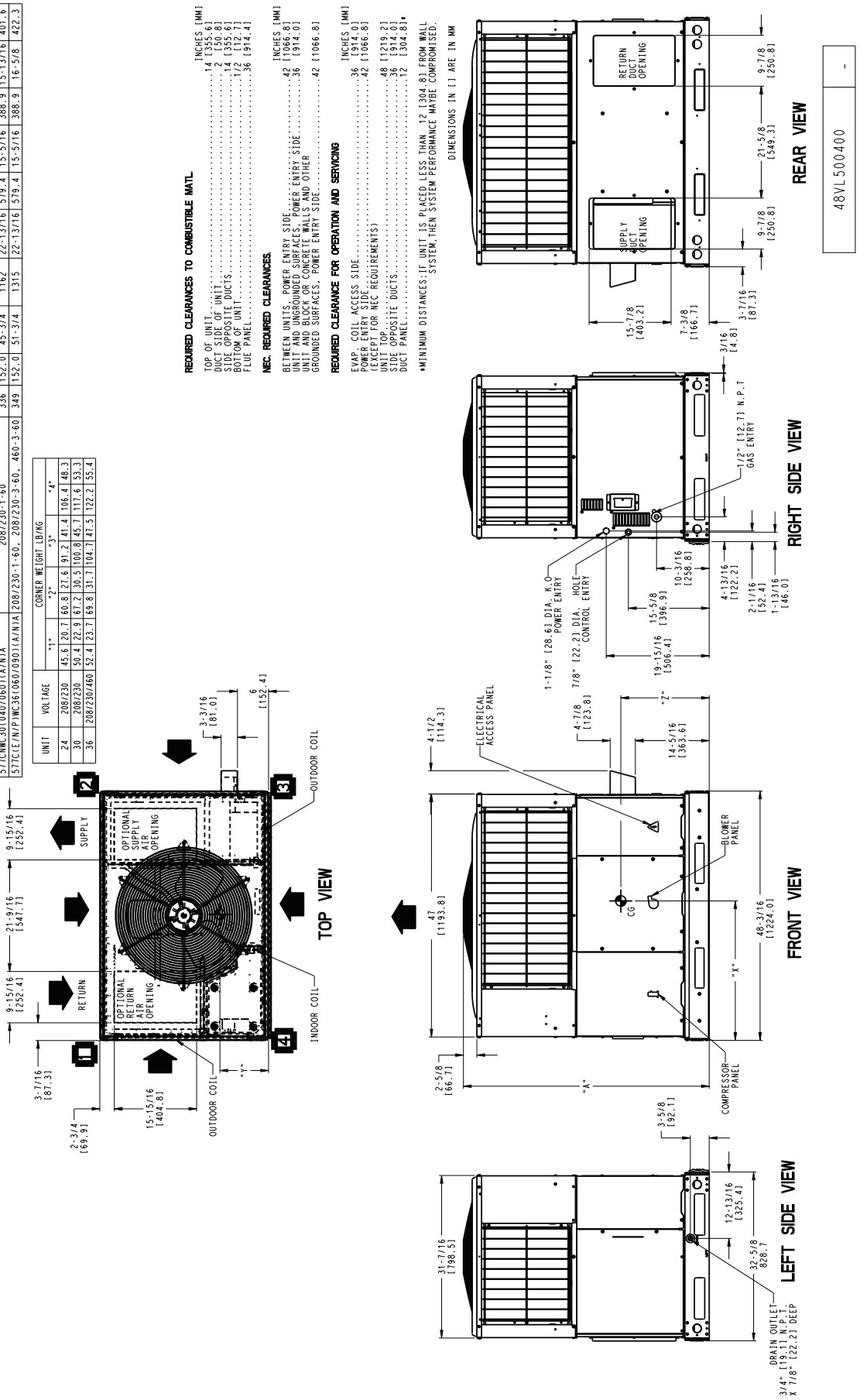


A150542

**Fig. 3 - 24-36 Unit Dimensions**

| UNIT | ELECTRICAL CHARACTERISTICS | UNIT WT. | | UNIT HEIGHT IN/MM | | CENTER OF GRAVITY IN/MM | | | | | |
|---|---|---|---|---|---|---|---|---|---|---|---|
| | | LB | KG | "A" | | X | | Y | | Z | |
| 577C(E/N/P)WC42(060/090)(A/N)A | 208/230-1-60,208/230-3-60,460-3-60 | 413 | 187.0 | 44-3/4 | 1137 | 22-13/16 | 579.4 | 18 | 457.2 | 17-1/8 | 435.0 |
| 577C(E/N/P)WC48(090/115/130)(A/N)A | 208/230-1-60,208/230-3-60,460-3-60 | 438 | 199.0 | 52-3/4 | 1340 | 22-13/16 | 579.4 | 18 | 457.2 | 17-3/8 | 441.3 |
| 577C(E/N/P)WC60(090/115/130)(A/N)A | 208/230-1-60,208/230-3-60,460-3-60 | 455 | 206.0 | 54-3/4 | 1391 | 22-13/16 | 579.4 | 18 | 457.2 | 17-5/8 | 447.7 |

| UNIT | VOLTAGE | CORNER WEIGHTS LB/KG | | | | | | | |
|---|---|---|---|---|---|---|---|---|---|
| | | "1" | | "2" | | "3" | | "4" | |
| 42 | 208/230/460 | 62.0 | 28.1 | 82.6 | 37.5 | 123.9 | 56.2 | 144.6 | 65.6 |
| 48 | 208/230/460 | 65.7 | 29.8 | 87.6 | 39.7 | 131.4 | 59.6 | 153.3 | 69.5 |
| 60 | 208/230/460 | 68.3 | 31.0 | 91.0 | 41.3 | 136.5 | 61.9 | 159.3 | 72.2 |

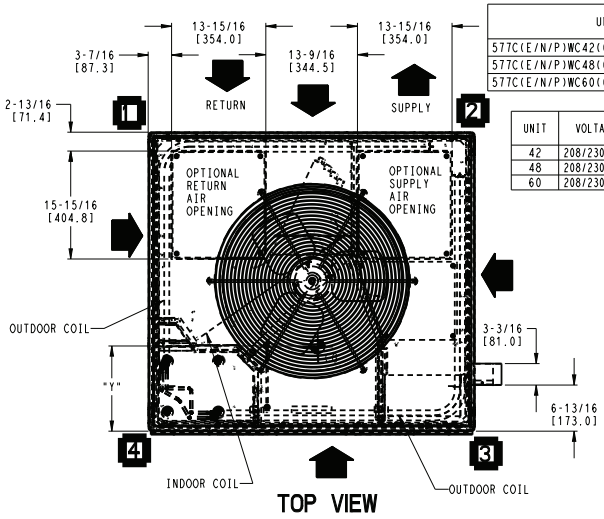


**REQUIRED CLEARANCES TO COMBUSTIBLE MATL.**

| | INCHES [MM] |
|---|---|
| TOP OF UNIT | 14 [355.6] |
| DUCT SIDE OF UNIT | 2 [50.8] |
| SIDE OPPOSITE DUCTS | 14 [355.6] |
| BOTTOM OF UNIT | 1/2 [12.7] |
| FLUE PANEL | 36 [914.4] |

**NEC. REQUIRED CLEARANCES.**

| | INCHES [MM] |
|---|---|
| BETWEEN UNITS, POWER ENTRY SIDE | 42 [1066.8] |
| UNIT AND UNGROUNDED SURFACES,POWER ENTRY SIDE | 36 [914.0] |
| UNIT AND BLOCK OR CONCRETE WALLS AND OTHER GROUNDED SURFACES, POWER ENTRY SIDE | 42 [1066.8] |

**REQUIRED CLEARANCE FOR OPERATION AND SERVICING**

| | INCHES [MM] |
|---|---|
| EVAP. COIL ACCESS SIDE | 36 [914.0] |
| POWER ENTRY SIDE | 42 [1066.8] |
| (EXCEPT FOR NEC REQUIREMENTS) | |
| UNIT TOP | 48 [1219.2] |
| SIDE OPPOSITE DUCTS | 36 [914.0] |
| DUCT PANEL | 12 [304.8]* |

*MINIMUM DISTANCES: IF UNIT IS PLACED LESS THAN 12 [304.8] FROM WALL SYSTEM, THEN SYSTEM PERFORMANCE MAYBE COMPROMISED.

DIMENSIONS IN [] ARE IN MM

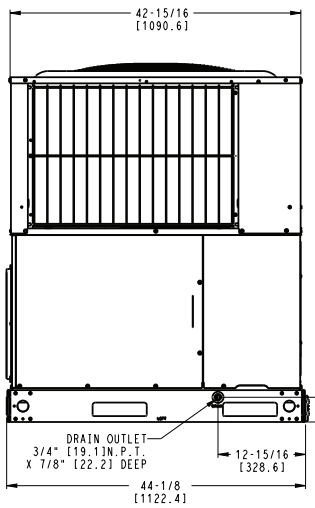


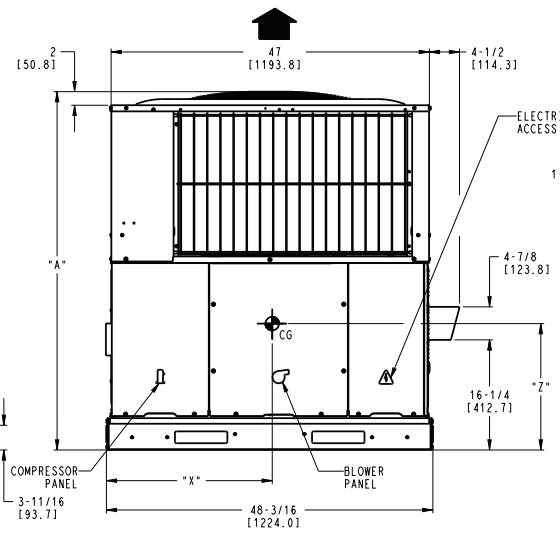


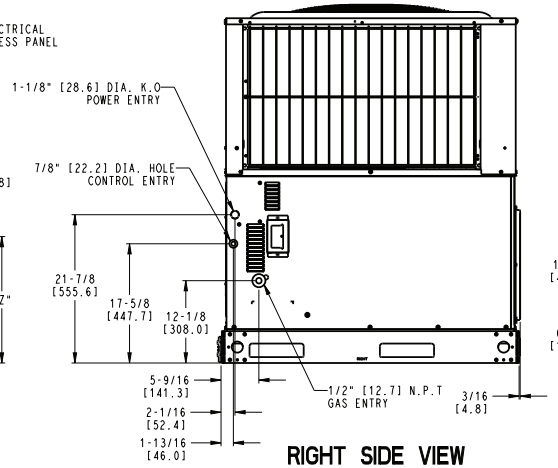


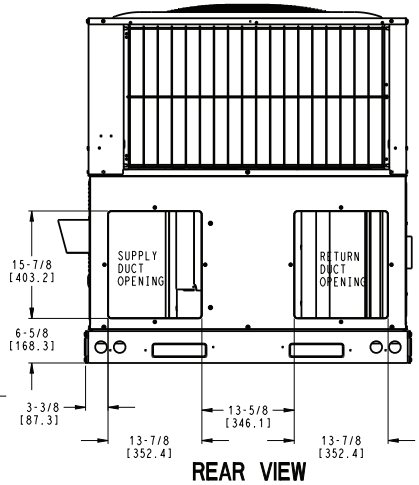


| 48VL500401 | _ |
|---|---|

**577C-- --C**

**Fig. 4 - 42-60 Unit Dimensions**

A150543

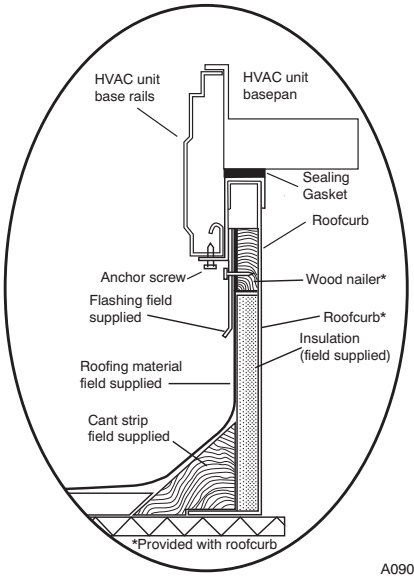


ROOF CURB DETAIL

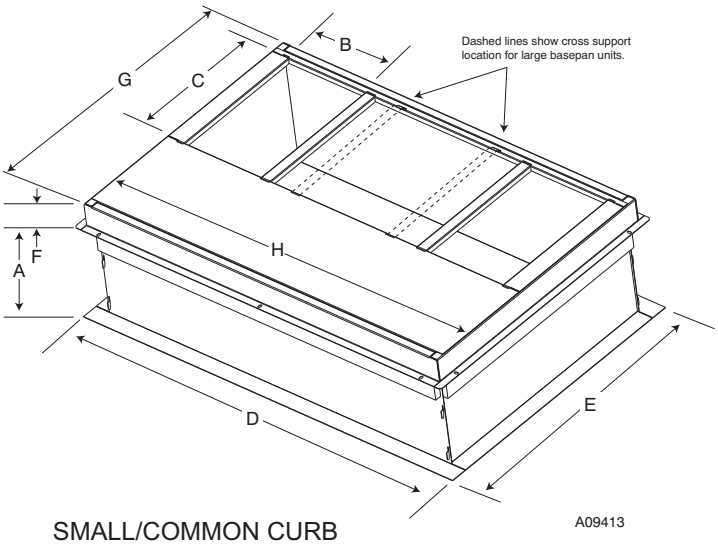


SMALL/COMMON CURB

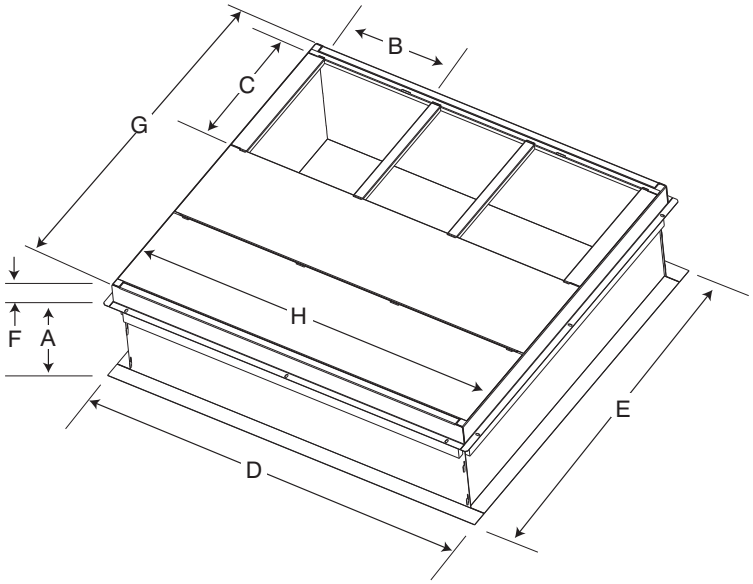


LARGE CURB

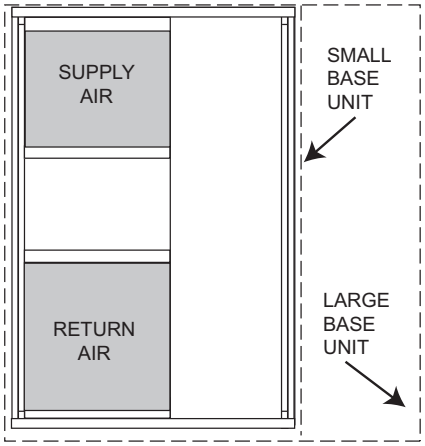


UNIT PLACEMENT ON COMMON CURB

A09094

SMALL OR LARGE BASE UNIT

A09414

| UNIT SIZE | CATALOG NUMBER | A IN. (mm) | B (small / common base) IN. (mm)* | B (large base) IN. (mm)* | C IN. (mm) | D IN. (mm) | E IN. (mm) | F IN. (mm) | G IN. (mm) | H IN. (mm) |
|---|---|---|---|---|---|---|---|---|---|---|
| Small or Large | CPRFCURB010A00 | 11 (279) | 10 (254) | 14 (356) | 16 (406) | 47.8 (1214) | 32.4 (822) | 2.7 (69) | 30.6 (778) | 46.1 (1170) |
| | CPRFCURB011A00 | 14 (356) | | | | | | | | |
| Large | CPRFCURB012A00 | 11 (279) | 14 (356) | | | | 43.9 (1116) | | 42.2 (1072) | |
| | CPRFCURB013A00 | 14 (356) | | | | | | | | |

* Part Numbers CPRCURB010A00 and CPRCURB011A00 can be used on both small and large basepan units. The cross supports must be located based on whether the unit is a small basepan or a large basepan.

NOTES:

1. Roof curb must be set up for unit being installed.
2. Seal strip must be applied, as required, to unit being installed.
3. Roof curb is made of 16-gauge steel.
4. Attach ductwork to curb (flanges of duct rest on curb).
5. Insulated panels: 1-in. (25.4 mm) thick fiberglass 1 lb. density.

**Fig. 5 - Roof Curb Dimensions**

# ⚠ CAUTION - NOTICE TO RIGGERS
# ⚠ PRUDENCE - AVIS AUX MANIPULATEUR

**ACCESS PANELS MUST BE IN PLACE WHEN RIGGING.**
**PANNEAUX D'ACCES DOIT ÊTRE EN PLACE POUR MANIPULATION.**

**Use top skid as spreader bar. / Utiliser la palette du haut comme barre de répartition**

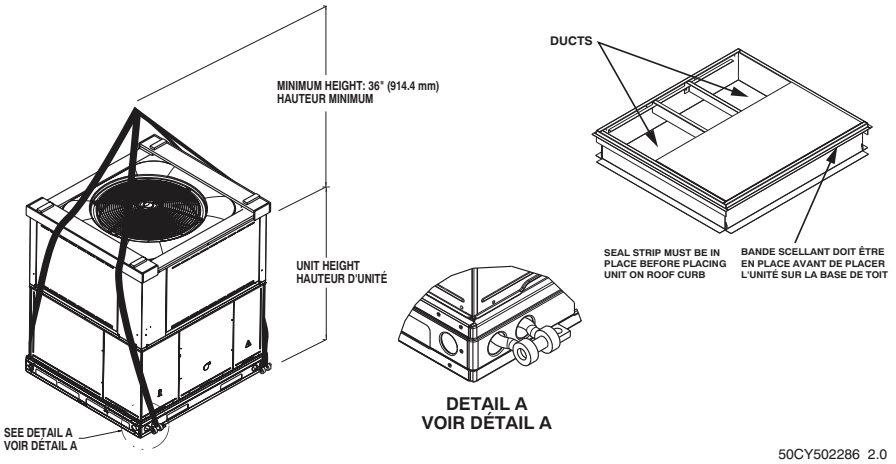


A09051

| SMALL CABINET | | | | | | | | LARGE CABINET | | | | | | |
|---|---|---|---|---|---|---|---|---|---|---|---|---|---|---|
| Unit | 24 | | 30 | | 36 | | | Unit | 42 | | 48 | | 60 | |
| | lb | kg | lb | kg | lb | kg | | | lb | kg | lb | kg | lb | kg |
| Rigging Weight | 329 | 149 | 361 | 164 | 390 | 177 | | Rigging Weight | 455 | 206 | 480 | 218 | 497 | 225 |

NOTE: See dimensional drawing for corner weights.

**Fig. 6 - Unit Suggested Rigging**

**Table 1 – Physical Data**

| UNIT SIZE | 24040 | 24060 | 30040 | 30060 | 36060 | 36090 | 42060 | 42090 |
|---|---|---|---|---|---|---|---|---|
| NOMINAL CAPACITY (ton) | 2 | 2 | 2–1/2 | 2–1/2 | 3 | 3 | 3–1/2 | 3–1/2 |
| SHIPPING WEIGHT lb.<br>SHIPPING WEIGHT (kg) | 329<br>149 | 329<br>149 | 361<br>164 | 361<br>164 | 390<br>177 | 390<br>177 | 455<br>206 | 455<br>206 |
| COMPRESSOR / QUANTITY | Rotary / 1 | | Recip / 1 | | Scroll / 1 | | | |
| REFRIGERANT (R–410A)<br>Quantity lb.<br>Quantity (kg) | <br>5.3<br>2.4 | <br>5.3<br>2.4 | <br>5.5<br>2.5 | <br>5.5<br>2.5 | <br>8.2<br>3.7 | <br>8.2<br>3.7 | <br>6.2<br>2.8 | <br>6.2<br>2.8 |
| REFRIGERANT METERING DEVICE | Orifice | | | | TXV | | Orifice | |
| ORIFICE ID in. / mm | .059 / 1.5 | .059 / 1.5 | .061 / 1.55 | .061 / 1.55 | N/A | | .073 / 1.85 | .073 /1.85 |
| OUTDOOR COIL<br>Rows...Fins/in.<br>Face Area (sq ft) | <br>1..21<br>11.9 | <br>1...21<br>11.9 | <br>1...21<br>13.6 | <br>1...21<br>13.6 | <br>1...21<br>18.8 | <br>1...21<br>18.8 | <br>1...21<br>13.6 | <br>1...21<br>13.6 |
| OUTDOOR FAN<br>Nominal CFM<br>Diameter in.<br>Diameter (mm)<br>Motor Hp (Rpm) | <br>2500<br>24<br>609.6<br>1/10 (810) | <br>2500<br>24<br>609.6<br>1/10 (810) | <br>2700<br>24<br>609.6<br>1/10 (810) | <br>2700<br>24<br>609.6<br>1/10 (810) | <br>3200<br>24<br>609.6<br>1/5 (810) | <br>3200<br>24<br>609.6<br>1/5 (810) | <br>3600<br>26<br>660.4<br>1/5 (810 | <br>3600<br>26<br>660.4<br>1/5 (810) |
| INDOOR COIL<br>Rows...Fins/in.<br>Face Area (sq ft) | <br>3...17<br>3.7 | <br>3...17<br>3.7 | <br>3...17<br>3.7 | <br>3...17<br>3.7 | <br>3...17<br>3.7 | <br>3...17<br>3.7 | <br>3...17<br>4.7 | <br>3...17<br>4.7 |
| INDOOR BLOWER<br>Nominal Cooling Airflow (Cfm)<br>Size in.<br>Size (mm.)<br>Motor HP (RPM) | <br>800<br>10x10<br>254x254<br>1/2 (1050) | <br>800<br>10x10<br>254x254<br>1/2 (1050) | <br>1000<br>10x10<br>254x254<br>1/2 (1050) | <br>1000<br>10x10<br>254x254<br>1/2 (1050) | <br>1150<br>11x10<br>279.4x254<br>3/4 (1000) | <br>1150<br>11x10<br>279.4x254<br>3/4 (1000) | <br>1350<br>11x10<br>279.4x254<br>3/4 (1075) | <br>1350<br>11x10<br>279.4x254<br>3/4 (1075) |
| FURNACE SECTION*<br>Burner Orifice No. (Qty...Drill Size)<br>1 Phase Natural Gas (Factory Installed)<br>1 Phase Propane Gas<br>3 Phase Natural Gas (Factory Installed)<br>3 Phase Propane Gas | <br><br>2...44<br>2...55 | <br><br>3...44<br>3...55 | <br><br>2...44<br>2...55<br>2...44<br>2...55 | <br><br>3...44<br>3...55<br>2...38<br>2...53 | <br><br>3...44<br>3...55<br>2...38<br>2...53 | <br><br>3...38<br>3...53<br>3...38<br>3...53 | <br><br>3...44<br>3...55<br>2...38<br>2...53 | <br><br>3...38<br>3...53<br>3...38<br>3...53 |
| HIGH–PRESSURE SWITCH (psig) Cut–out Reset (Auto) | 650 +/– 15<br>420 +/– 25 | | | | | | | |
| LOSS-OF-CHARGE / LOW-PRESSURE SWITCH (Liquid Line) (psig) cut-out Reset (auto) | 20 +/– 5<br>45 +/– 10 | | | | | | | |
| RETURN–AIR FILTERS†‡<br>Throwaway Size in.<br>(mm) | 2 each 20x12x1<br>508x305x25 | | | | | | 1 each 24x14x1<br>610x356x25<br>24x15x1<br>610x406x25 | |

*Based on altitude of 0 to 2000 ft (0–610 m).

† Required filter sizes shown are based on the larger of the AHRI (Air Conditioning Heating and Refrigeration Institute) rated cooling airflow or the heating airflow velocity of 300 to 350 ft/minute for throwaway type. Air filter pressure drop for non–standard filters must not exceed 0.08 IN. W.C.

‡ If using accessory filter rack refer to the filter rack installation instructions for correct filter sizes and quantity.

**Table 1—Physical Data Con't**

| UNIT SIZE | 48090 | 48115 | 48130 | 60090 | 60115 | 60130 |
|---|---|---|---|---|---|---|
| NOMINAL CAPACITY (ton) | 4 | 4 | 4 | 5 | 5 | 5 |
| SHIPPING WEIGHT lb<br>SHIPPING WEIGHT kg | 480<br>218 | 480<br>218 | 480<br>218 | 497<br>225 | 497<br>225 | 497<br>225 |
| COMPRESSOR / QUANTITY | Scroll / 1 | | | | | |
| REFRIGERANT (R–410A)<br>Quantity lb<br>Quantity (kg.) | <br>9.2<br>4.2 | <br>9.2<br>4.2 | <br>9.2<br>4.2 | <br>9.8<br>4.4 | <br>9.8<br>4.4 | <br>9.8<br>4.4 |
| REFRIGERANT METERING DEVICE | Orifice | | | | | |
| ORIFICE ID in./mm | .080 / 2.03 | | | | .084 / 2.14 | |
| OUTDOOR COIL<br>Rows...Fins/in.<br>Face Area (sq ft) | <br>1...21<br>21.4 | <br>1...21<br>21.4 | <br>1...21<br>21.4 | <br>1...21<br>23.3 | <br>1...21<br>23.3 | <br>1...21<br>23.3 |
| OUTDOOR FAN<br>Nominal Cfm<br>Diameter in.<br>Diameter (mm)<br>Motor Hp (Rpm) | <br>3600<br>26<br>660.4<br>1/5 (810) | <br>3600<br>26<br>660.4<br>1/5 (810) | <br>3600<br>26<br>660.4<br>1/5 (810) | <br>4200<br>26<br>660.4<br>1/5 (810) | <br>4200<br>26<br>660.4<br>1/5 (810) | <br>4200<br>26<br>660.4<br>1/5 (810) |
| INDOOR COIL<br>Rows...Fins/in.<br>Face Area (sq ft) | <br>3...17<br>4.7 | <br>3...17<br>4.7 | <br>3...17<br>4.7 | <br>3...17<br>5.6 | <br>3...17<br>5.6 | <br>3...17<br>5.6 |
| INDOOR BLOWER<br>Nominal Cooling Airflow (Cfm)<br>Size in.<br>Size (mm)<br>Motor HP (RPM) | <br>1550<br>11x10<br>279.4x254<br>1.0 (1075) | <br>1550<br>11x10<br>279.4x254<br>1.0 (1075) | <br>1550<br>11x10<br>279.4x254<br>1.0 (1075) | <br>1750<br>11x10<br>279.4x254<br>1.0 (1040) | <br>1750<br>11x10<br>279.4x254<br>1.0 (1040) | <br>1750<br>11x10<br>279.4x254<br>1.0 (1040) |
| FURNACE SECTION*<br>Burner Orifice No. (Qty...Drill Size)<br>1 & 3 Phase Natural Gas (Factory Installed)<br>1 & 3 Phase Propane Gas | <br><br>3...38<br>3...53 | <br><br>3...33<br>3...51 | <br><br>3...31<br>3...49 | <br><br>3...38<br>3...53 | <br><br>3...33<br>3...51 | <br><br>3...31<br>3...49 |
| HIGH–PRESSURE SWITCH (psig) Cut–out Reset (Auto) | 650 +/– 15<br>420 +/– 25 | | | | | |
| LOSS–OF CHARGE / LOW–PRESSURE SWITCH (Liquid Line) (psig) cut–out Reset (auto) | 20 +/– 5<br>45 +/– 10 | N/A | | | | |
| RETURN–AIR FILTERS Throwaway†‡ in.<br>mm | 1 each 24x14x1<br>610x356x25<br>24x15x1<br>610x406x25 | | | 1 each 24x16x1<br>610x406x25<br>24x18x1<br>610x457x25 | | |

*Based on altitude of 0 to 2000 ft (0–610 m).

† Required filter sizes shown are based on the larger of the AHRI (Air Conditioning Heating and Refrigeration Institute) rated cooling airflow or the heating airflow velocity of 300 to 350 ft/minute for throwaway type. Air filter pressure drop for non–standard filters must not exceed 0.08 IN. W.C.

‡ If using accessory filter rack refer to the filter rack installation instructions for correct filter sizes and quantity.

**Table 2 – Maximum Gas Flow Capacity***

| NOMINAL IRON PIPE SIZE (IN.) | INTERNAL DIAMETER (IN.) | LENGTH OF PIPE FT (m)† | | | | | | | | | | | | | |
|---|---|---|---|---|---|---|---|---|---|---|---|---|---|---|---|
| | | 10 (3) | 20 (6) | 30 (9) | 40 (12) | 50 (15) | 60 (18) | 70 (21) | 80 (24) | 90 (27) | 100 (30) | 125 (38) | 150 (46) | 175 (53) | 200 (61) |
| 1/2 | .622 | 175 | 120 | 97 | 82 | 73 | 66 | 61 | 57 | 53 | 50 | 44 | 40 | — | — |
| 3/4 | .824 | 360 | 250 | 200 | 170 | 151 | 138 | 125 | 118 | 110 | 103 | 93 | 84 | 77 | 72 |
| 1 | 1.049 | 680 | 465 | 375 | 320 | 285 | 260 | 240 | 220 | 205 | 195 | 175 | 160 | 145 | 135 |
| 1–1/4 | 1.380 | 1400 | 950 | 770 | 600 | 580 | 530 | 490 | 460 | 430 | 400 | 360 | 325 | 300 | 280 |
| 1–1/2 | 1.610 | 2100 | 1460 | 1180 | 990 | 900 | 810 | 750 | 690 | 650 | 620 | 550 | 500 | 460 | 430 |

*Capacity of pipe in cu ft of gas per hr for gas pressure of 0.5 psig or less. Pressure drop of 0.5–IN. W.C. (based on a 0.60 specific gravity gas). Refer to Table 2 and National Fuel Gas Code NFPA 54/ANSI Z223.1.

† This length includes an ordinary number of fittings.

## Step 6 — Connect Condensate Drain

**NOTE**: When installing condensate drain connection be sure to comply with local codes and restrictions.

This unit disposes of condensate water through a 3/4 in. NPT fitting which exits through the base on the evaporator coil access side. See Fig. 3 & 4 for location.

Condensate water can be drained directly onto the roof in rooftop installations (where permitted) or onto a gravel apron in ground level installations. Install a field-supplied 2-in. (51 mm) condensate trap at the end of condensate connection to ensure proper drainage. Make sure that the outlet of the trap is at least 1 in. (25 mm) lower than the drain-pan condensate connection to prevent the pan from overflowing (See Fig. 7). Prime the trap with water. When using a gravel apron, make sure it slopes away from the unit.

Connect a drain tube using a minimum of 3/4-in. PVC or 3/4-in. copper pipe (all field-supplied) at the outlet end of the 2-in. (51 mm) trap. Do not undersize the tube. Pitch the drain tube downward at a slope of at least 1-in. (25 mm) for every 10 ft (3.1 m) of horizontal run. Be sure to check the drain tube for leaks.

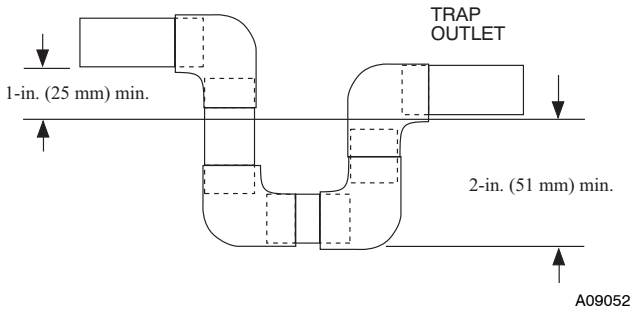


**Fig. 7 - Condensate Trap**

## Step 7 — Install Flue Hood

The flue assembly is secured and shipped in the return air duct. Remove duct cover to locate the assembly (See Fig. 9).

**NOTE**: Dedicated low NOx models MUST be installed in California Air Quality Management Districts where a Low NOx rule exists.

These models meet the California maximum oxides of nitrogen (NOx) emissions requirements of 40 nanograms/joule or less as shipped from the factory.

**NOTE**: Low NOx requirements apply only to natural gas installations.

**⚠ WARNING**

**CARBON MONOXIDE POISONING HAZARD**

Failure to follow this warning could result in personal injury or death.

The venting system is designed to ensure proper venting. The flue hood assembly must be installed as indicted in this section of the unit installation instructions.

Install the flue hood as follows:

1. This installation must conform with local building codes and with NFPA 54/ANSI Z223.1 National Fuel Gas Code (NFGC), (in Canada, CAN/CGA B149.1, and B149.2) latest revision. Refer to Provincial and local plumbing or wastewater codes and other applicable local codes.
2. Remove flue hood from shipping location (inside the return section of the blower compartment-see Fig. 9). Remove the return duct cover to locate the flue hood. Place flue hood assembly over flue panel. Orient screw holes in flue hood with holes in the flue panel.
3. Secure flue hood to flue panel by inserting a single screw on the top flange and the bottom flange of the hood.

## Step 8 — Install Gas Piping

The gas supply pipe enters the unit through the access hole provided. The gas connection to the unit is made to the 1/2-in. (12.7 mm) FPT gas inlet on the gas valve.

Install a gas supply line that runs to the heating section. Refer to the NFGC for gas pipe sizing. Do not use cast-iron pipe. It is recommended that a black iron pipe is used. Check the local utility for recommendations concerning existing lines. Size gas supply piping for 0.5 IN. W.C. maximum pressure drop. Never use pipe smaller than the 1/2-in. (12.7 mm) FPT gas inlet on the unit gas valve.

For natural gas applications, the gas pressure at unit gas connection must not be less than 4.0 IN. W.C. or greater than 13 IN. W.C. while the unit is operating. For propane applications, the gas pressure must not be less than 11.0 IN. W.C. or greater than 13 IN. W.C. at the unit connection.

A 1/8-in. (3.2 mm) NPT plugged tapping, accessible for test gauge connection, must be installed immediately upstream of the gas supply connection to the gas valve.

When installing the gas supply line, observe local codes pertaining to gas pipe installations. Refer to the NFPA 54/ANSI Z223.1 latest edition (in Canada, CAN/CGA B149.1).

**NOTE**: In the state of Massachusetts:

1. Gas supply connections MUST be performed by a licensed plumber or gas fitter.
2. When flexible connectors are used, the maximum length shall not exceed 36 inches (915 mm).
3. When lever handle type manual equipment shutoff valves are used, they shall be T-handle valves.
4. The use of copper tubing for gas piping is NOT approved by the state of Massachusetts.

In the absence of local building codes, adhere to the following pertinent recommendations:

1. Avoid low spots in long runs of pipe. Grade all pipe 1/4 in. (6.35 mm) for every 15 ft (4.6 m) of length to prevent traps. Grade all horizontal runs downward to risers. Use risers to connect to heating section and to meter.
2. Protect all segments of piping system against physical and thermal damage. Support all piping with appropriate straps, hangers, etc. Use a minimum of one hanger every 6 ft (1.8 m). For pipe sizes larger than 1/2 in., follow recommendations of national codes.
3. Apply joint compound (pipe dope) sparingly and only to male threads of joint when making pipe connections. Use only pipe dope that is resistant to action of liquefied petroleum gases as specified by local and/or national codes. Never use Teflon tape.
4. Install sediment trap in riser leading to heating section (See Fig. 8). This drip leg functions as a trap for dirt and condensate.
5. Install an accessible, external, manual main shutoff valve in gas supply pipe within 6 ft (1.8 m) of heating section.
6. Install ground-joint union close to heating section between unit manual shutoff and external manual main shut-off valve.
7. Pressure test all gas piping in accordance with local and national plumbing and gas codes before connecting piping to unit.

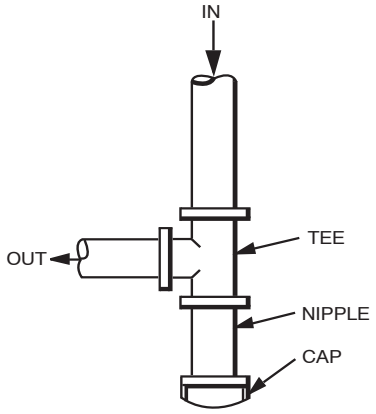


**Fig. 8 - Sediment Trap**

**NOTE**: Pressure test the gas supply system after the gas supply piping is connected to the gas valve. The supply piping must be disconnected from the gas valve during the testing of the piping systems when test pressure is in excess of 0.5 psig. Pressure test the gas supply piping system at pressures equal to or less than 0.5 psig. The unit heating section must be isolated from the gas piping system by closing the external main manual shutoff valve and slightly opening the ground-joint union.

## ⚠ WARNING

**FIRE OR EXPLOSION HAZARD**

Failure to follow this warning could result in personal injury, death and/or property damage.

-Connect gas pipe to unit using a backup wrench to avoid damaging gas controls.

-Never purge a gas line into a combustion chamber. Never test for gas leaks with an open flame. Use a commercially available soap solution made specifically for the detection of leaks to check all connections. A fire or explosion may result causing property damage, personal injury or loss of life.

-Use proper length of pipe to avoid stress on gas control manifold.

-If a flexible connector is required or allowed by authority having jurisdiction, black iron pipe shall be installed at furnace gas valve and extend a minimum of 2 in. (51 mm) outside furnace casing.

-If codes allow a flexible connector, always use a new connector. Do not use a connector which has previously serviced another gas appliance.

8. Check for gas leaks at the field-installed and factory-installed gas lines after all piping connections have been completed. Use a commercially available soap solution (or method specified by local codes and/or regulations).

## Step 9 — Install Duct Connections

The unit has duct flanges on the supply- and return-air openings on the side and bottom of the unit. For downshot applications, the ductwork connects to the roof curb (See Fig. 3 and 4 for connection sizes and locations).

**Configuring Units for Downflow (Vertical) Discharge**

## ⚠ WARNING

**ELECTRICAL SHOCK HAZARD**

Failure to follow this warning could result in personal injury or death.

Before installing or servicing system, always turn off main power to system and install lockout tag. There may be more than one disconnect switch.

1. Open all electrical disconnects before starting any service work.
2. Remove horizontal (metal) duct covers to access vertical (downflow) discharge duct knockouts in unit basepan. (See Fig. 9.)

## ⚠ CAUTION

**PROPERTY DAMAGE HAZARD**

Failure to follow this caution may result in property damage.

Collect ALL screws that were removed. **Do not** leave screws on rooftop as permanent damage to the roof may occur.

3. For single-phase models only, on the discharge side only, remove the insulation covering the downshot (plastic) knockout. Insulation is held in place with aluminum tape. Please note that large chassis units have 2 pieces of insulation, and only the piece over the downshot knockout needs to be removed. Discard insulation.
4. To remove the downshot (plastic) knockouts for both supply and returns, break front and right side connecting tabs with a screwdriver and hammer. Push cover down to break rear and left side tabs. These plastic knockouts are held in place with tabs similar to an electrical knockout. Discard plastic knockout covers.
5. Set unit on roof curb.
6. Verify that the downshot ducts are aligned with the downshot knockout areas.
7. Re-install horizontal (metal) covers as needed to seal unit. Ensure openings are air and watertight.

**NOTE**: The design and installation of the duct system must be in accordance with the standards of the NFPA for installation of nonresidence-type air conditioning and ventilating systems, NFPA 90A or residence-type, NFPA 90B; and/or local codes and ordinances.

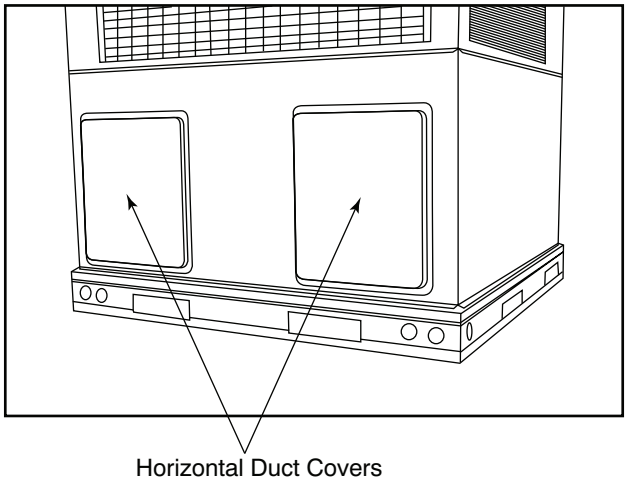


**Fig. 9 - Supply and Return Duct Opening**

Adhere to the following criteria when selecting, sizing, and installing the duct system:

1. Units are shipped for horizontal duct installation (by removing duct covers).
2. Select and size ductwork, supply-air registers, and return-air grilles according to American Society of Heating, Refrigeration and Air Conditioning Engineers (ASHRAE) recommendations.
3. Use flexible transition between rigid ductwork and unit to prevent transmission of vibration. The transition may be screwed or bolted to duct flanges. Use suitable gaskets to ensure weather-tight and airtight seal.
4. All units must have field-supplied filters or accessory filter rack installed in the return-air side of the unit. Recommended sizes for filters are shown in Table 1.

5. Size all ductwork for maximum required airflow (either heating or cooling) for unit being installed. Avoid abrupt duct size increases or decreases or performance may be affected.
6. Adequately insulate and weatherproof all ductwork located outdoors. Insulate ducts passing through unconditioned space, and use vapor barrier in accordance with latest issue of Sheet Metal and Air Conditioning Contractors National Association (SMACNA) and Air Conditioning Contractors of America (ACCA) minimum installation standards for heating and air conditioning systems. Secure all ducts to building structure.
7. Flash, weatherproof, and vibration isolate all openings in building structure in accordance with local codes and good building practices.

## Step 10 — Install Electrical Connections

**⚠ WARNING**

**ELECTRICAL SHOCK HAZARD**

Failure to follow this warning could result in personal injury or death.

The unit cabinet must have an uninterrupted, unbroken electrical ground. This ground may consist of an electrical wire connected to the unit ground screw in the control compartment, or conduit approved for electrical ground when installed in accordance with NFPA 70 (NEC) (latest edition) (in Canada, Canadian Electrical Code CSA C22.1) and local electrical codes.

**⚠ CAUTION**

**UNIT COMPONENT DAMAGE HAZARD**

Failure to follow this caution may result in damage to the unit being installed.

1. Make all electrical connections in accordance with NFPA 70 (NEC) (latest edition) and local electrical codes governing such wiring. In Canada, all electrical connections must be in accordance with CSA standard C22.1 Canadian Electrical Code Part 1 and applicable local codes. Refer to unit wiring diagram.
2. Use only copper conductor for connections between field-supplied electrical disconnect switch and unit. DO NOT USE ALUMINUM WIRE.
3. Be sure that high-voltage power to unit is within operating voltage range indicated on unit rating plate. On 3-phase units, ensure phases are balanced within 2 percent. Consult local power company for correction of improper voltage and/or phase imbalance.
4. Insulate low-voltage wires for highest voltage contained within conduit when low-voltage control wires are in same conduit as high-voltage wires.
5. Do not damage internal components when drilling through any panel to mount electrical hardware, conduit, etc.

### High-Voltage Connections

When routing power leads into unit, use only copper wire between disconnect and unit. The high voltage leads should be in a conduit until they enter the duct panel; conduit termination at the duct panel must be watertight.

The unit must have a separate electrical service with a field-supplied, waterproof disconnect switch mounted at, or within sight from, the unit. Refer to the unit rating plate, NEC and local codes for maximum fuse/circuit breaker size and minimum circuit amps (ampacity) for wire sizing.

The field-supplied disconnect switch box may be mounted on the unit over the high-voltage inlet hole when the standard power and low-voltage entry points are used (See Fig. 3 and 4 for acceptable location).

**NOTE**: Field supplied disconnect switch box should be positioned so that it does not cover up any of the unit gas combustion supply air louvers.

See unit wiring label (Fig. 14, 15 and 16) and Fig. 10 for reference when making high voltage connections. Proceed as follows to complete the high-voltage connections to the unit.

Single phase units:

1. Run the high-voltage (L1, L2) and ground lead into the control box.
2. Connect ground lead to chassis ground connection.
3. Locate the black and yellow wires connected to the line side of the contactor (if equipped).
4. Connect field L1 to black wire on connection 11 of the compressor contactor.
5. Connect field wire L2 to yellow wire on connection 23 of the compressor contactor.

Three-phase units:

1. Run the high-voltage (L1, L2, L3) and ground lead into the control box.
2. Connect ground lead to chassis ground connection.
3. Locate the black and yellow wires connected to the line side of the contactor (if equipped).
4. Connect field L1 to black wire on connection 11 of the compressor contactor.
5. Connect field wire L3 to yellow wire on connection 13 of the compressor contactor.
6. Connect field wire L2 to blue wire from compressor.

### Special Procedures for 208-v Operation

**⚠ WARNING**

**ELECTRICAL SHOCK HAZARD**

Failure to follow this warning could result in personal injury or death.

Make sure the power supply to the unit is switched OFF and install lockout tag. before making any wiring changes. With disconnect switch open, move black wire from transformer (3/16 in. [4.8 mm]) terminal marked 230 to terminal marked 208. This retaps transformer to primary voltage of 208 vac.

**⚠ WARNING**

**ELECTRICAL SHOCK FIRE/EXPLOSION HAZARD**

Failure to follow this warning could result in personal injury or death and property damage.

Before making any wiring changes, **make sure** the gas supply is switched off first. *Then* switch off the power supply to the unit and install lockout tag.

### Control Voltage Connections

Do not use any type of power-stealing thermostat. Unit control problems may result.

Use no. 18 American Wire Gage (AWG) color-coded, insulated (35°C minimum) wires to make the control voltage connections between the thermostat and the unit. If the thermostat is located more than 100 ft (30.5 m) from the unit (as measured along the control voltage wires), use no. 16 AWG color-coded, insulated (35°C minimum) wires.

## Standard Connection

Run the low-voltage leads from the thermostat, through the inlet hole, and into unit low-voltage splice box.

Locate six (seven for 3-phase) 18-gage wires leaving control box. These low-voltage connection leads can be identified by the colors red, green, yellow, brown, blue, and white (See Fig. 10). A gray wire is standard on 3-phase units for connection to an economizer. Ensure the leads are long enough to be routed into the low-voltage splice box (located below right side of control box). Route leads through hole in bottom of control box and make low-voltage connections (See Fig. 10). Secure all cut wires, so that they do not interfere with operation of unit.

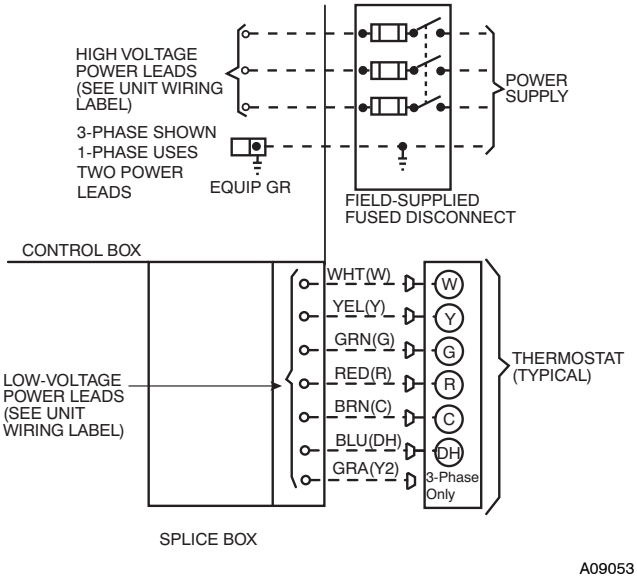


**Fig. 10 - High- and Control-Voltage Connections**

## Heat Anticipator Setting (Electro-Mechanical Thermostats only)

The room thermostat heat anticipator must be properly adjusted to ensure proper heating performance. Set the heat anticipator, using an ammeter between the W and R terminals to determine the exact required setting.

**NOTE**: For thermostat selection purposes, use 0.18 amp for the approximate required setting. Failure to make a proper heat anticipator adjustment will result in improper operation, discomfort to the occupants of the conditioned space, and inefficient energy utilization; however, the required setting may be changed slightly to provide a greater degree of comfort for a particular installation.

## Transformer Protection

The transformer is of the energy-limiting type, however a direct short will likely blow a secondary fuse. If an overload or short is present, correct overload condition and check for blown fuse on Indoor Fan board or Integrated Gas Controller. Replace fuse as required with correct size and rating.

# PRE-START-UP

**⚠ WARNING**

**ENVIRONMENTAL, FIRE, EXPLOSION, ELECTRICAL SHOCK HAZARD**

Failure to follow this warning could result in personal injury or death.

1. Follow recognized safety practices and wear protective goggles when checking or servicing refrigerant system.
2. Do not operate compressor or provide any electric power to unit unless compressor plug is in place and secured.
3. Do not remove compressor plug until all electrical sources are disconnected and tagged.
4. Relieve and recover all refrigerant from system before touching or disturbing compressor plug if refrigerant leak is suspected around compressor terminals.
5. Never attempt to repair soldered connection while refrigerant system is under pressure.
6. Do not use torch to remove any component. System contains oil and refrigerant under pressure.
   To remove a component, wear protective goggles and proceed as follows:
   a. Shut off electrical power to unit and install lockout tag.
   b. Relieve and reclaim all refrigerant from system using both high- and low-pressure ports.
   c. Cut component connecting tubing with tubing cutter and remove component from unit.
   d. Carefully unsweat remaining tubing stubs when necessary. Oil can ignite when exposed to torch flame.

Use the Start-Up Checklist supplied at the end of this book and proceed as follows to inspect and prepare the unit for initial start-up:

1. Remove access panels (see Fig. 20).
2. Read and follow instructions on all DANGER, WARNING, CAUTION, and INFORMATION labels attached to, or shipped with unit.
3. Make the following inspections:
   a. Inspect for shipping and handling damage, such as broken lines, loose parts, disconnected wires, etc.
   b. Inspect all field- and factory-wiring connections. Be sure that connections are completed and tight.
   c. Ensure wires do not touch refrigerant tubing or sharp sheet metal edges.
   d. Inspect coil fins. If damaged during shipping and handling, carefully straighten fins with a fin comb.

**⚠ WARNING**

**FIRE, EXPLOSION HAZARD**

Failure to follow this warning could result in personal injury, death or property damage.

Do not purge gas supply into the combustion chamber. Do not use a match or other open flame to check for gas leaks. Use a commercially available soap solution made specifically for the detection of leaks to check all connections. A fire or explosion may result causing property damage, personal injury or loss of life.

4. Verify the following conditions:
   a. Make sure gas line is free of air. Before lighting the unit for the first time, perform the following with the gas valve in the OFF position:

**NOTE**: If the gas supply pipe was not purged before connecting the unit, it will be full of air. It is recommended that the ground joint union be loosened, and the supply line be allowed to purge until the odor of gas is detected. Never purge gas lines into a combustion chamber. Immediately upon detection of gas odor, retighten the union. Allow 5 minutes to elapse, then light unit.

   b. Ensure fan hub is positioned correctly with respect to motor housing.
   c. Make sure that air filter(s) is in place.
   d. Make sure that condensate drain trap is filled with water to ensure proper drainage.
   e. Make sure that all tools and miscellaneous loose parts have been removed.

# START-UP

## Step 1 — Check for Refrigerant Leaks

**⚠ WARNING**

**EXPLOSION HAZARD**

Failure to follow this warning could result in death, serious personal injury, and/or property damage.

Never use air or gases containing oxygen for leak testing or operating refrigerant compressors. Pressurized mixtures of air or gases containing oxygen can lead to an explosion.

Proceed as follows to locate and repair a refrigerant leak and to charge the unit:

1. Locate leak and make sure that refrigerant system pressure has been relieved and reclaimed from both high- and low-pressure ports.
2. Repair leak following accepted practices.

**NOTE**: Install a filter drier whenever the system has been opened for repair.

3. Add a small charge of Puron (R-410A) refrigerant vapor to system and leak-test unit.
4. Recover refrigerant from refrigerant system and evacuate to 500 microns if no additional leaks are found.
5. Charge unit with Puron (R-410A) refrigerant, using an accurate scale. Refer to unit rating plate for required charge.

## Step 2 — Start-up Heating and Make Adjustments

Complete the required procedures given in the Pre-Start-Up section before starting the unit. Do not jumper any safety devices when operating the unit. Make sure that burner orifices are properly aligned. Unstable operation my occur when the burner orifices in the manifold are misaligned.

Follow the lighting instructions on the heating section operation label (located on the inside of the control access panel) to start the heating section.

**NOTE**: Make sure that gas supply has been purged, and that all gas piping has been checked for leaks.

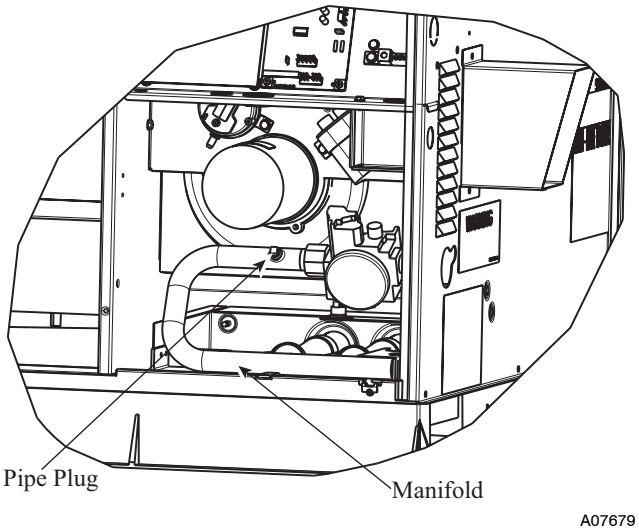


**Fig. 11 - Burner Assembly**

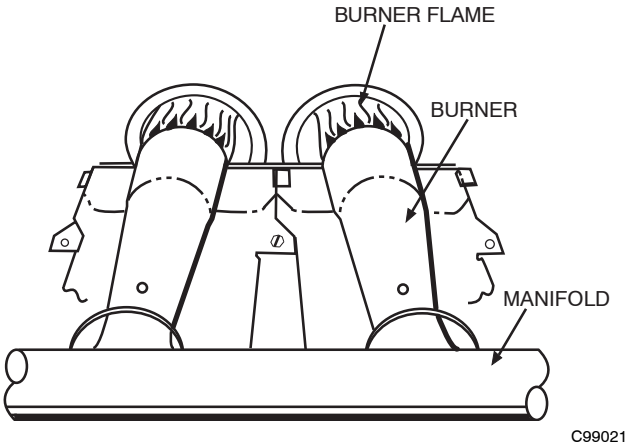


**Fig. 12 - Monoport Burner**

### Check Heating Control

Start and check the unit for proper heating control operation as follows (see furnace lighting instructions located on the inside of the control access panel):

1. Place room thermostat SYSTEM switch in the HEAT position and the fan switch is placed in AUTO position.
2. Set the heating temperature control of the thermostat above room temperature.
3. The induced-draft motor will start.
4. On a call for heating, the main burner should light within 5 sec. of the spark being energized. If the burners do not light, there is a 22-sec. delay before another 5-sec. try. If the burners still do not light, this sequence is repeated. For 3-phase models if the burners do not light within 15 minutes from the initial call for heat, there is a lockout. For single phase models, if the burners do not light on the 4th ignition attempt, there is a lockout. To reset the control, break the 24-v power to W.
5. For 3-phase models the evaporator fan will turn on 45 sec. after the flame has been established. The evaporator fan will turn off 45 sec. after the thermostat has been satisfied. For single phase models the evaporator fan will turn on 30 sec. after the flame has been established. The evaporator fan will turn off 90 sec. after the thermostat has been satisfied. Please note that the integrated gas unit controller (IGC) has the capability to automatically reduce the evaporator "ON" delay and increase the evaporator "OFF" delay in the event of high duct static and/or partially-clogged filter.

## Check Gas Input

Check gas input and manifold pressure after unit start-up (See Table 6). If adjustment is required proceed as follows:

- The rated gas inputs shown in Table 6 are for altitudes from sea level to 2000 ft (610 m) above sea level. These inputs are based on natural gas with a heating value of 1025 Btu/ft$^3$ at 0.60 specific gravity, or propane gas with a heating value of 2500 Btu/ft$^3$ at 1.5 specific gravity.

IN THE U.S.A.:

The input rating for altitudes above 2,000 ft (610 m) must be reduced by 4% for each 1,000 ft (305 m) above see level.

For installations below 2,000 ft (610 m), refer to the unit rating plate.

For installations above 2,000 ft (610 m). multiply the input on the rating plate by the derate multiplier in Table 3 for correct input rate.

**Table 3 – Altitude Derate Multiplier for U.S.A.***

| ALTITUDE FT (M) | PERCENT OF DERATE | DERATE MULTIPLIER FACTOR† |
|---|---|---|
| 0–2000 (0–610) | 0 | 1.00 |
| 2001–3000* (610–914) | 8–12 | 0.90 |
| 3001–4000 (915–1219) | 12–16 | 0.86 |
| 4001–5000 (1220–1524) | 16–20 | 0.82 |
| 5001–6000 (1524 –1829) | 20–24 | 0.78 |
| 6001–7000 (1829–2134) | 24–28 | 0.74 |
| 7001–8000 (2134–2438) | 28–32 | 0.70 |
| 8001–9000 (2439–2743) | 32–36 | 0.66 |
| 9001–10,000 (2744–3048) | 36–40 | 0.62 |

*In Canada see Canadian Altitude Adjustment.
†Derate multiplier factors are based on midpoint altitude for altitude range.

IN CANADA:

The input rating for altitudes from 2,000 (610 m) to 4,500 ft (1372 m) above sea level must be derated 10% by an authorized Gas Conversion Station or Dealer.

EXAMPLE:

90,000 Btu/hr Input Furnace Installed at 4300 ft.

| Furnace Input Rate at Sea Level | X | Derate Multiplier Factor | = | Furnace Input Rate at Installation Altitude |
|---|---|---|---|---|
| 90,000 | X | 0.90 | = | 81,000 |

When the gas supply being used has a different heating value or specific gravity, refer to national and local codes, or contact your distributor to determine the required orifice size.

**⚠ CAUTION**

**UNIT DAMAGE HAZARD**

Failure to follow this caution may result in reduced unit and/or component life.

**Do Not** redrill an orifice. Improper drilling (burrs, out-of-round holes, etc.) can cause excessive burner noise and misdirection of burner flame. If orifice hole appears damaged or it is suspected to have been redrilled, check orifice hole with a numbered drill bit of correct size.

## Adjust Gas Input

The gas input to the unit is determined by measuring the gas flow at the meter or by measuring the manifold pressure. Measuring the gas flow at the meter is recommended for natural gas units. The manifold pressure must be measured to determine the input of propane gas units.

**Measure Gas Flow (Natural Gas Units)**

Minor adjustment to the gas flow can be made by changing the manifold pressure. The manifold pressure must be maintained between 3.2 and 3.8 IN. W.C.

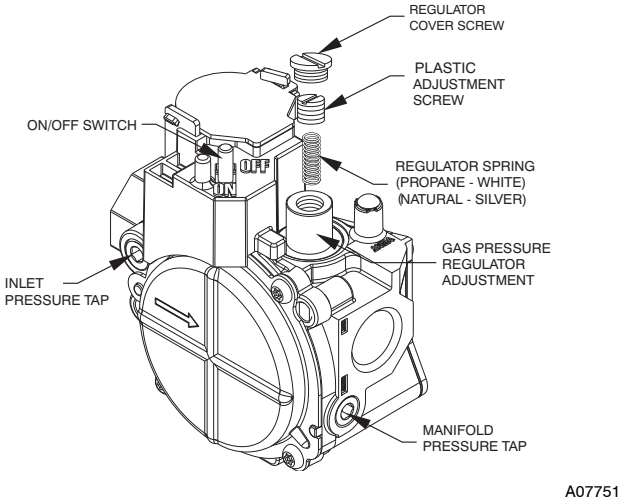


**Fig. 13 - Single-Stage Gas Valve**

If larger adjustments are required, change main burner orifices following the recommendations of national and local codes.

**NOTE**: All other appliances that use the same meter must be turned off when gas flow is measured at the meter.

Proceed as follows:

1. Turn off gas supply to unit.
2. Remove pipe plug on manifold (See Fig. 11) and connect manometer. Turn on gas supply to unit.
3. Record number of seconds for gas meter test dial to make one revolution.
4. Divide number of seconds in Step 3 into 3600 (number of seconds in one hr).
5. Multiply result of Step 4 by the number of cubic feet (cu ft) shown for one revolution of test dial to obtain cubic feet (cu ft) of gas flow per hour.
6. Multiply result of Step 5 by Btu heating value of gas to obtain total measured input in Btuh. Compare this value with heating input shown in Table 6 (Consult the local gas supplier if the heating value of gas is not known).

EXAMPLE: Assume that the size of test dial is 1 cu ft, one revolution takes 32 sec, and the heating value of the gas is 1050 Btu/ft$^3$. Proceed as follows:

1. 32 sec. to complete one revolution.
2. 3600 ÷ 32 = 112.5.
3. 112.5 x 1 =112.5 ft$^3$ of gas flow/hr.
4. 112.5 x 1050 = 118,125 Btuh input.

If the desired gas input is 115,000 Btuh, only a minor change in the manifold pressure is required.

Observe manifold pressure and proceed as follows to adjust gas input:

1. Remove regulator cover screw over plastic adjustment screw on gas valve (See Fig. 13).
2. Turn plastic adjustment screw clockwise to increase gas input, or turn plastic adjustment screw counterclockwise to decrease input (See Fig. 13). Manifold pressure must be between 3.2 and 3.8 IN. WC.

## ⚠ WARNING

**FIRE AND UNIT DAMAGE HAZARD**

Failure to follow this warning could result in personal injury or death and/or property damage.

Unsafe operation of the unit may result if manifold pressure is outside this range.

3. Replace regulator cover screw on gas valve (See Fig. 13).
4. Turn off gas supply to unit. Remove manometer from pressure tap and replace pipe plug on gas valve. (See Fig. 11.) Turn on gas to unit and check for leaks.

**Measure Manifold Pressure (Propane Units)**

Refer to propane kit installation instructions for properly checking gas input.

**NOTE**: For installations below 2,000 ft (610 m), refer to the unit rating plate for proper propane conversion kit. For installations above 2,000 ft (610 m), contact your distributor for proper propane conversion kit.

## Check Burner Flame

With control access panel (see Fig. 20) removed, observe the unit heating operation. Watch the burner flames to see if they are light blue and soft in appearance, and that the flames are approximately the same for each burner. Propane will have blue flame (See Fig. 12). Refer to the Maintenance section for information on burner removal.

**Table 4 – High Altitude Compensation, Natural Gas - Single Phase Models**

| Nameplate Input (Btu/hr) | Rated Heating Input (Btu/hr), Natural Gas at Installation Altitude Above Sea Level, U.S.A.* | | | | |
|---|---|---|---|---|---|
| | 0 to 2000 ft (0–610 m) | 2001 to 3000 ft* (611 to 914 m) | 3001 to 4000 ft (915 to 1219 m) | 4001 to 5000 ft (1220 to 1524 m) | 5001 to 6000 ft (1524 to 1829 m) |
| 40000 | 40000 | 36000 | 34400 | 32800 | 31200 |
| 60000 | 60000 | 54000 | 51600 | 49200 | 46800 |
| 90000 | 90000 | 81000 | 77400 | 73800 | 70200 |
| 115000 | 115000 | 103500 | 98900 | 94300 | 89700 |
| 127000 | 127000 | 114300 | 109200 | 104100 | 99100 |

*In the U.S.A., the input rating for altitudes above 2000 ft (610m) must be reduced by 4% for each 1000 ft (305 m) above sea level.
In Canada, the input rating for altitudes from 2001 to 4500 ft (611 to 1372 m) above sea level must be derated by 10% by an authorized gas conversion station or dealer.
For Canadian Installations from 2000 to 4500 ft (610–1372 m), use U.S.A. column 2001 to 3000 ft (611 to 914 m).

**Table 5 – High Altitude Compensation, Natural Gas - Three Phase**

| Nameplate Input (Btu/hr) | Rated Heating Input (Btu/hr), Natural Gas at Installation Altitude Above Sea Level, U.S.A.* | | | | |
|---|---|---|---|---|---|
| | 0 to 2000 ft (0–610 m) | 2001 to 3000 ft* (611 to 914 m) | 3001 to 4000 ft (915 to 1219 m) | 4001 to 5000 ft (1220 to 1524 m) | 5001 to 6000 ft (1524 to 1829 m) |
| 40000 | 40000 | 36000 | 34400 | 32800 | 31200 |
| 60000 | 60000 | 54000 | 51600 | 49200 | 46800 |
| 90000 | 90000 | 81000 | 77400 | 73800 | 70200 |
| 115000 | 115000 | 103500 | 98900 | 94300 | 89700 |
| 130000 | 130000 | 117000 | 111800 | 106600 | 101400 |

*In the U.S.A., the input rating for altitudes above 2000 ft (610m) must be reduced by 4% for each 1000 ft (305 m) above sea level.
In Canada, the input rating for altitudes from 2001 to 4500 ft (611 to 1372 m) above sea level must be derated by 10% by an authorized gas conversion station or dealer.
For Canadian Installations from 2000 to 4500 ft (610–1372 m), use U.S.A. column 2001 to 3000 ft (611 to 914 m).

**Table 6 – Heating Inputs**

| HEATING INPUT (BTUH) | NUMBER OF ORIFICES | GAS SUPPLY PRESSURE (IN. W.C.) | | | | MANIFOLD PRESSURE (IN. W.C.) | |
|---|---|---|---|---|---|---|---|
| | | Natural† | | Propane*† | | | |
| | | Min | Max | Min | Max | Natural† | Propane*† |
| **40,000** | 2 | 4.0 | 13.0 | 11.0 | 13.0 | 3.2~3.8 | 10.0~11.0 |
| **60,000** | 3 | 4.0 | 13.0 | 11.0 | 13.0 | 3.2~3.8 | 10.0~11.0 |
| **90,000** | 3 | 4.5 | 13.0 | 11.0 | 13.0 | 3.2~3.8 | 10.0~11.0 |
| **115,000** | 3 | 4.5 | 13.0 | 11.0 | 13.0 | 3.2~3.8 | 10.0~11.0 |
| **130,000** | 3 | 4.5 | 13.0 | 11.0 | 13.0 | 3.2~3.8 | 10.0~11.0 |

*When a unit is converted to propane, different size orifices must be used. See separate, natural–to–propane conversion kit instructions.

†Based on altitudes from sea level to 2000 ft (610 m) above sea level. In U.S.A. for altitudes above 2000 ft (610 m), reduce input rating 4 percent for each additional 1000 ft (305 m) above sea level. In Canada, from 2000 ft (610 m) above sea level to 4500 ft (1372 m) above sea level, derate the unit 10 percent.

## CONNECTION WIRING DIAGRAM
## DANGER: ELECTRICAL SHOCK HAZARD DISCONNECT POWER BEFORE SERVICING
## SCHEMATIC 208/230-1-60

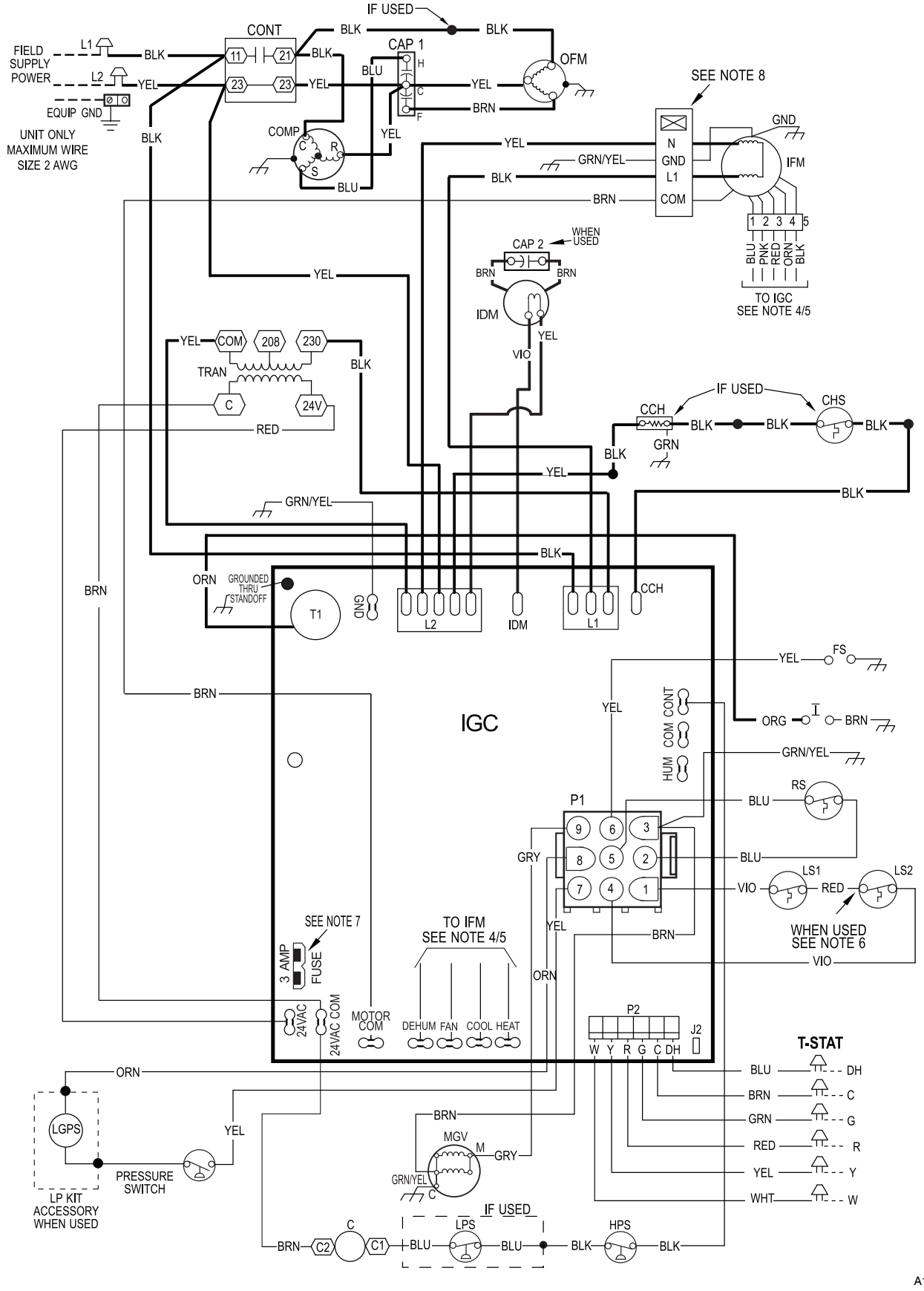


**Fig. 14 - 208/230-1-60 Connection Wiring Diagram**

577C--C

## LADDER WIRING DIAGRAM
## DANGER: ELECTRICAL SHOCK HAZARD DISCONNECT POWER BEFORE SERVICING

### LEGEND

| | | | |
|---|---|---|---|
| | FIELD SPLICE | EQUIP | EQUIPMENT |
| | TERMINAL (MARKED) | FS | FLAME SENSOR |
| | TERMINAL (UNMARKED) | GND | GROUND |
| | SPLICE | HPS | HIGH PRESSURE SWITCH |
| | SPLICE (MARKED) | I | IGNITOR |
| | FACTORY LO VOLTAGE | IDM | INDUCED DRAFT MOTOR |
| | FIELD CONTROL WIRING | IFM | INDOOR FAN MOTOR |
| | FIELD POWER WIRING | IGC | INTERGRATED GAS UNIT CONTROLLER |
| | ACCESSORY OR OPTIONAL WIRING | LGPS | LOW GAS PRESSURE SWITCH (WHEN USED) |
| | FACTORY HI VOLTAGE | LPS | LOW PRESSURE SWITCH |
| C | CONTACTOR | LS1 | PRIMARY LIMIT SWITCH |
| CAP1 | CAPACITOR, COMP | LS2 | SECONDARY LIMIT SWITCH |
| CAP2 | CAPACITOR, INDUCER (WHEN USED) | MGV | MAIN GAS VALVE |
| CCH | CRANKCASE HEATER | OFM | OUTDOOR FAN MOTOR |
| CHS | CRANKCASE HEATER SWITCH | OT | QUADRUPLE TERMINAL |
| COMP | COMPRESSOR MOTOR | RS | ROLLOUT SWITCH |
| | | TRAN | TRANSFORMER |
| | | T-STAT | THERMOSTAT |

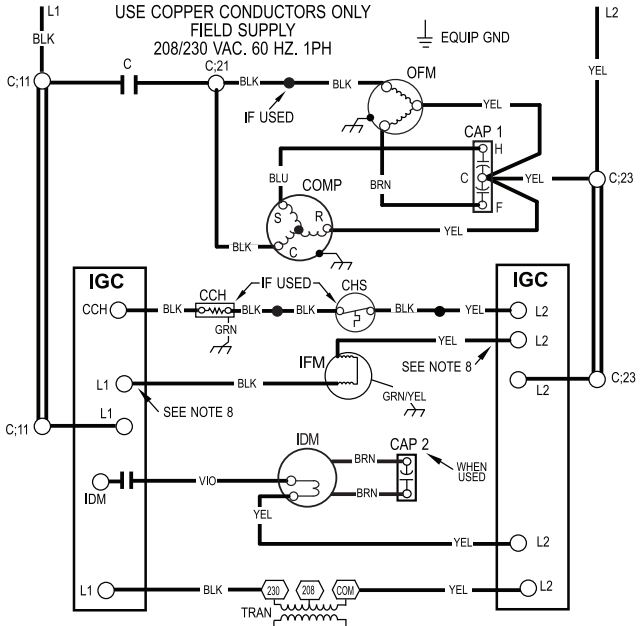


1Ø UNIT COMPONENT ARRANGEMENT

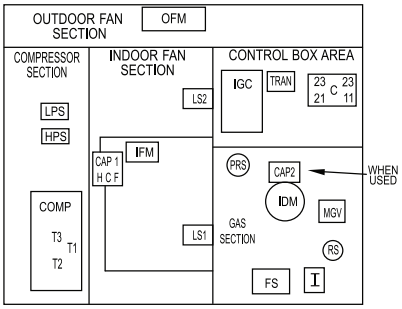


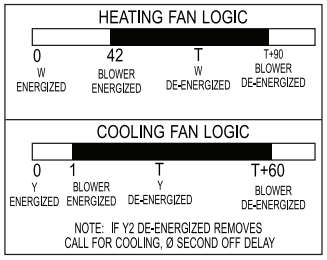


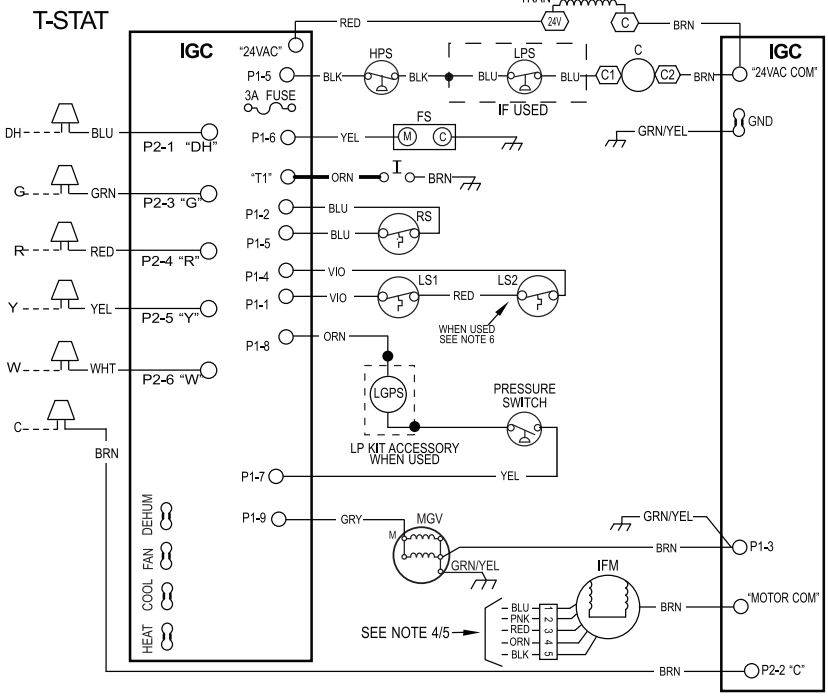


### NOTES:

1. IF ANY OF THE ORIGINAL WIRES FURNISHED ARE REPLACED THEY MUST BE REPLACED WITH THE SAME WIRE OR IT'S EQUIVALENT.
2. SEE PRE-SALE LITERATURE FOR THERMOSTATS.
3. USE 75 DEGREES C COPPER CONDUCTORS FOR FIELD INSTALLATION.
4. REFER TO INSTALLATION INSTRUCTIONS FOR CORRECT SPEED SELECTION FOR IFM.
5. SEE INSTALLATION INSTRUCTIONS FOR PROPER HEATING AND COOLING CONNECTIONS FOR YOUR UNIT.
6. ON SOME MODELS LS1 AND LS2 ARE WIRED IN SERIES. ON OTHER MODELS ONLY LS1 IS USED.
7. THIS FUSE IS MANUFACTURED BY LITTLE FUSE, P/N 287003.
8. DO NOT DISCONNECT PLUG UNDER LOAD.
9. N.E.C. CLASS 2, 24V.

48VL500420 REV. -

A150510

**Fig. 14 Cont. - 208/230-1-60 Ladder Wiring Diagram**

# CONNECTION WIRING DIAGRAM

## DANGER: ELECTRICAL SHOCK HAZARD DISCONNECT POWER BEFORE SERVICING

NOTES:
1. IF ANY OF THE ORIGINAL WIRES FURNISHED ARE REPLACED, THEY MUST BE REPLACED WITH TYPE 90 DEG. C WIRE OR ITS EQUIVALENT.
2. SEE PRE-SALE LITERATURE FOR THERMOSTAT AND SUBBASES.
3. USE MIN. 75 DEG. COPPER CONDUCTORS FOR FIELD INSTALLATION.
4. SEE INSTALLATION INSTRUCTIONS FOR PROPER HEATING AND COOLING CONNECTIONS FOR YOUR UNIT. INDOOR FAN MOTOR PLUGS - "DO NOT DISCONNECT UNDER LOAD"
5. LS2 USED ON SMALL CHASSIS ONLY.
6. INDUCER CAPACITOR AND WIRING ON CERTAIN MODELS ONLY. IF CAP2 IS PRESENT, YELLOW WIRES FROM IGC AND IDM CONNECT ON SAME SIDE OF CAP2.
7. THIS FUSE IS MANUFACTURED BY LITTELFUSE, P/N 287003.
8. THIS FUSE IS MANUFACTURED BY LITTELFUSE, P/N 287005.
9. DEHUMIDIFICATION FEATURE CANNOT BE USED WHEN ECONOMIZER IS INSTALLED.
10. N.E.C. CLASS 2 24 V

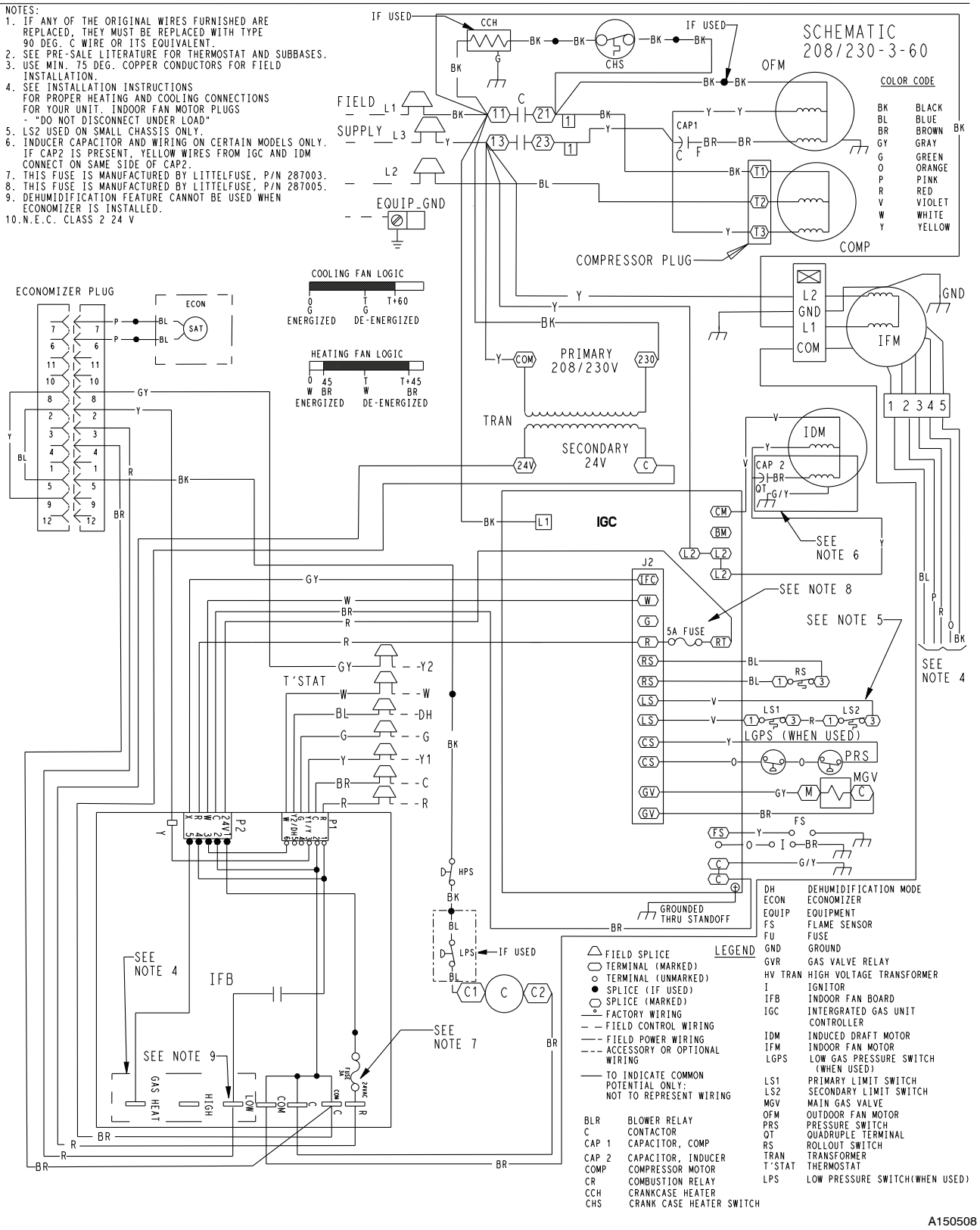


**Fig. 15 - 208/230-3-60 Connection Wiring Diagram**

DANGER: ELECTRICAL SHOCK HAZARD DISCONNECT POWER BEFORE SERVICING

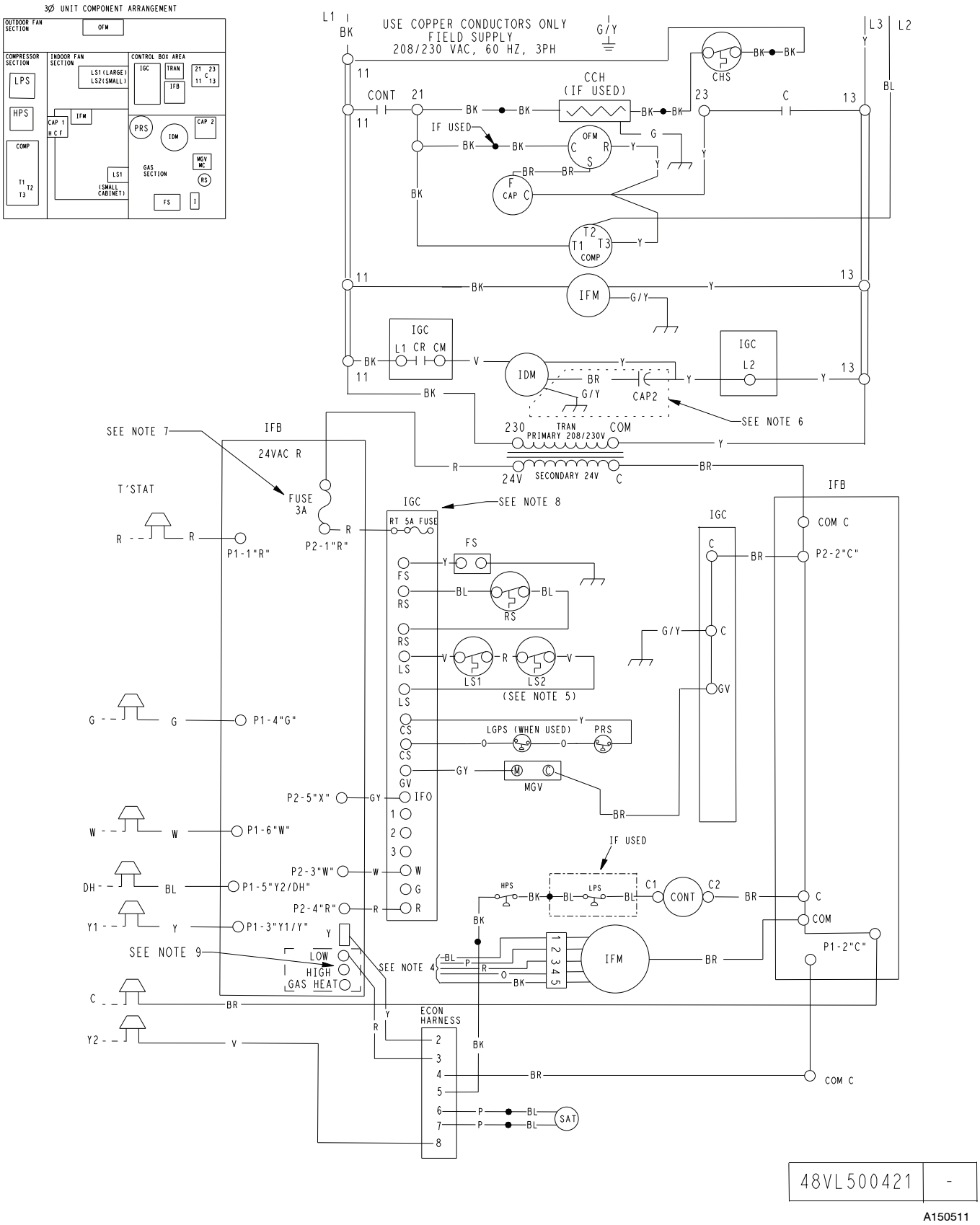


**Fig. 15 Cont. - 208/230-3-60 Ladder Wiring Diagram**

# CONNECTION WIRING DIAGRAM

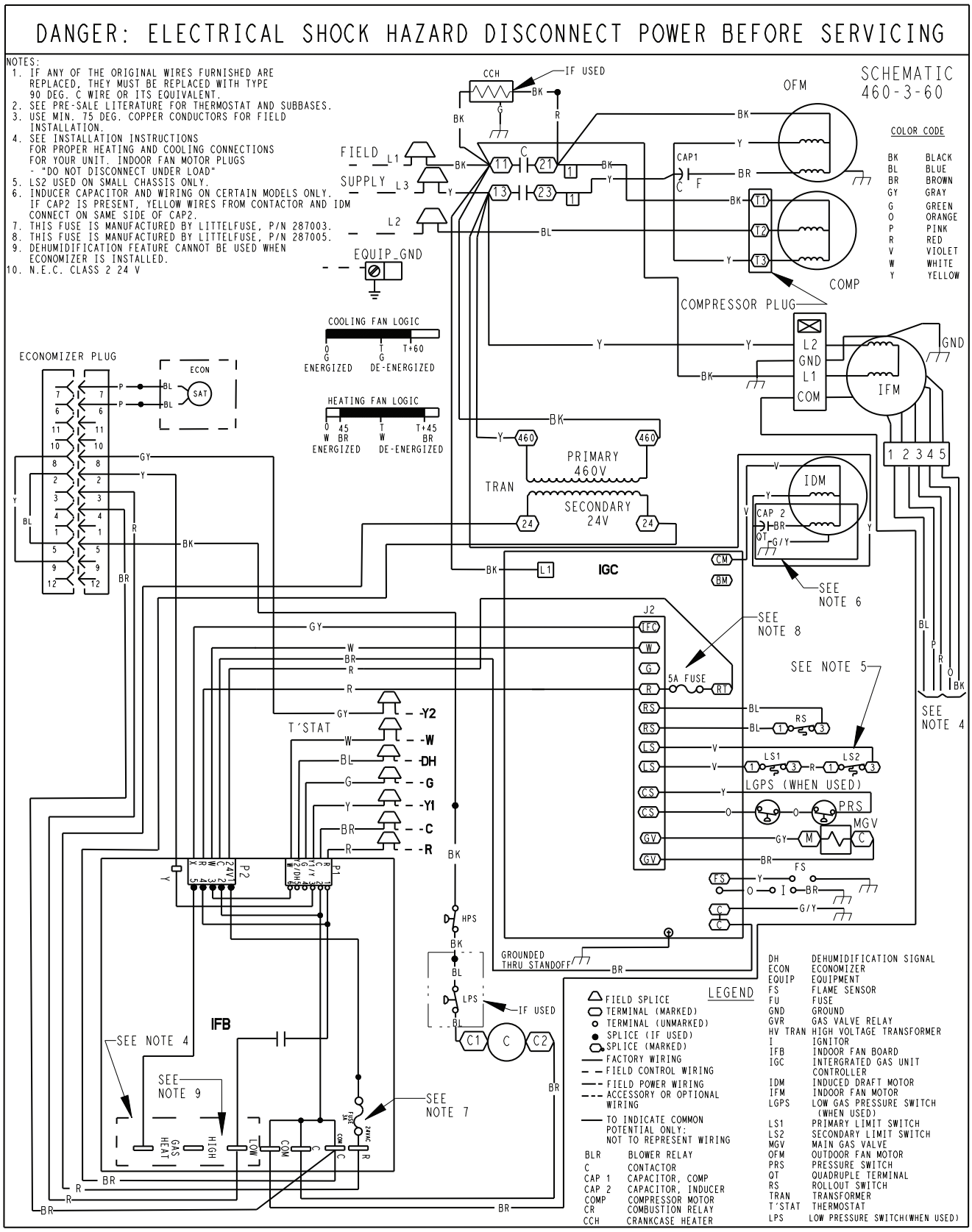


**Fig. 16 - 460-3-60 Connection Wiring Diagram**

# LADDER WIRING DIAGRAM

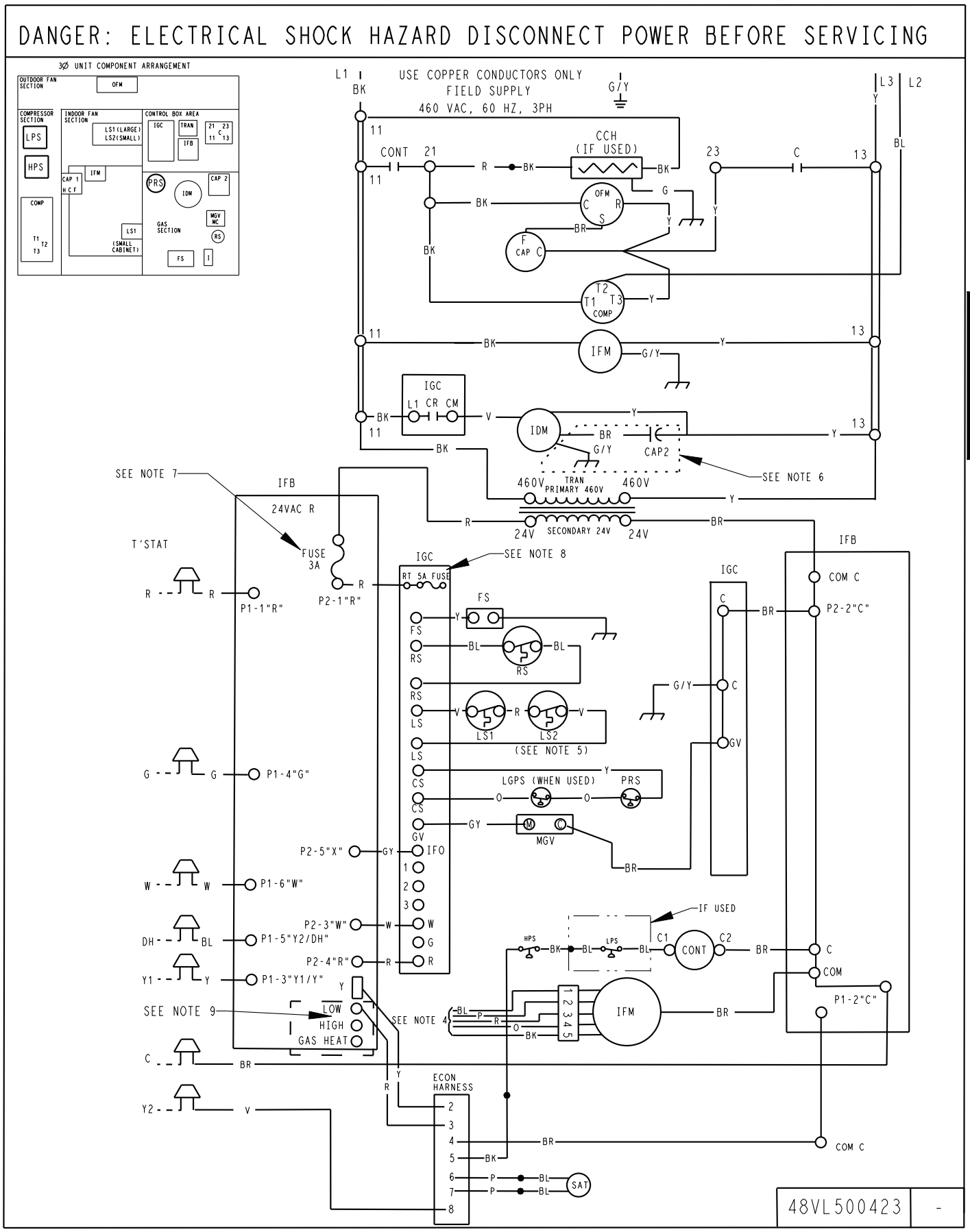


A150512

**Fig. 16 Cont. - 460-3-60 Ladder Wiring Diagram**

## Normal Operation

An LED (light-emitting diode) indicator is provided on the integrated gas unit controller (IGC) to monitor operation. The IGC is located by removing the control access panel (see Fig. 20). During normal operation, the LED is continuously on (See Table 7 for error codes).

## Airflow and Temperature Rise

The heating section for each size unit is designed and approved for heating operation within the temperature-rise range stamped on the unit rating plate.

Table 11 and 12 show the approved temperature rise range for each heating input, and the air delivery cfm at various temperature rises for a given external static pressure. The heating operation airflow must produce a temperature rise that falls within the approved range.

Refer to Indoor Airflow and Airflow Adjustments section to adjust heating airflow when required.

## Heating Sequence of Operation (Single Phase Models)

(See Fig. 14 and unit wiring label)

On a call for heating, terminal W of the thermostat is energized, starting the induced-draft motor for a 5 second pre-purge. When the pressure switch senses that the induced-draft motor is moving sufficient combustion air, the burner sequence begins. This function is controlled by the integrated gas unit controller (IGC). The indoor (evaporator) –fan motor is energized 30 seconds after flame is established. When the thermostat is satisfied and W is de-energized, the burners stop firing and the indoor (evaporator) fan motor shuts off after a 90 second time-off delay. Please note that the IGC has the capability to automatically reduce the indoor fan motor on delay and increase the indoor fan motor off delay in the event of high duct static and/or a partially-clogged filter.

## Heating Sequence of Operation (3 Phase Models)

(See Fig. 15 and 16 and unit wiring label.)

On a call for heating, terminal W of the thermostat is energized, starting the induced-draft motor. When the pressure switch senses that the induced-draft motor is moving sufficient combustion air, the burner sequence begins. This function is performed by the integrated gas unit controller (IGC). The indoor (evaporator)-fan motor is energized 45 sec after flame is established. When the thermostat is satisfied and W is de-energized, the burners stop firing and the indoor (evaporator) fan motor shuts off after a 45-sec time-off delay. Please note that the IGC has the capability to automatically reduce the indoor fan motor on delay and increase the indoor fan motor off delay in the event of high duct static and/or partially-clogged filter.

## Limit Switches

Normally closed limit switch (LS) completes the control circuit. Should the leaving-air temperature rise above the maximum allowable temperature, the limit switch opens and the control circuit "breaks." Any interruption in the control circuit instantly closes the gas valve and stops gas flow to the burners. The blower motor continues to run until LS resets.

When the air temperature at the limit switch drops to the low-temperature setting of the limit switch, the switch closes and completes the control circuit. The direct-spark ignition system cycles and the unit returns to normal heating operation.

**Table 7 – LED Indications**

| STATUS CODE | LED INDICATION |
|---|---|
| Normal Operation[2] | On |
| No Power or Hardware Failure | Off |
| Check fuse, low voltage circuit | 1 Flash |
| Limit Switch Fault | 2 Flashes |
| Flame Sense Fault | 3 Flashes |
| Four Consecutive Limit Switch Faults | 4 Flashes |
| Ignition Lockout Fault | 5 Flashes |
| Pressure Switch Fault | 6 Flashes |
| Rollout Switch Fault | 7 Flashes |
| Internal Control Fault | 8 Flashes |
| Temporary 1 hr auto reset[1] | 9 Flashes |

NOTES:
1.This code indicates an internal processor fault that will reset itself in one hr. Fault can be caused by stray RF signals in the structure or nearby. This is a UL requirement.
2. LED indicates acceptable operation. Do not change ignition control board.
3. When W is energized the burners will remain on for a minimum of 60 sec.
4. If more than one error code exists they will be displayed on the LED in sequence.

## Rollout Switch

The function of the rollout switch is to close the main gas valve in the event of flame rollout. The switch is located above the main burners. When the temperature at the rollout switch reaches the maximum allowable temperature, the control circuit trips, closing the gas valve and stopping gas flow to the burners. The indoor (evaporator) fan motor (IFM) and induced draft motor continue to run until switch is reset. The IGC LED will display FAULT CODE 7.

# Step 3 — Start-up Cooling and Make Adjustments

Complete the required procedures given in the Pre-Start-Up section before starting the unit. Do not jumper any safety devices when operating the unit. Do not operate the compressor when the outdoor temperature is below 40°F (4.4°C) (unless accessory low-ambient kit is installed). Do not rapid-cycle the compressor. Allow 5 minutes between on cycles to prevent compressor damage.

## Checking Cooling Control Operation

Start and check the unit for proper cooling control operation as follows:

1. Place room thermostat SYSTEM switch in OFF position. Observe that blower motor starts when FAN switch is placed in ON position and shuts down when FAN switch is placed in AUTO position.
2. Place SYSTEM switch in COOL position and FAN switch in AUTO position. Set cooling control below room temperature. Observe that compressor, condenser fan, and evaporator blower motors start. Observe that cooling cycle shuts down when control setting is satisfied. The evaporator fan will continue to run for 90 sec.
3. When using an auto-changeover room thermostat, place both SYSTEM and FAN switches in AUTO positions. Observe that unit operates in Heating mode when temperature control is set to call for heating (above room temperature) and operates in Cooling mode when temperature control is set to call for cooling (below room temperature).

**IMPORTANT**: Three-phase, scroll compressors are direction oriented. Unit must be checked to ensure proper compressor 3-phase power lead orientation. If not corrected within 5 minutes, the internal protector will shut off the compressor. The 3-phase power leads to the unit must be reversed to correct rotation. When

turning backwards, the difference between compressor suction and discharge pressures will be minimal.

## Checking and Adjusting Refrigerant Charge

The refrigerant system is fully charged with Puron® (R-410A) refrigerant and is tested and factory sealed. Allow system to operate a minimum of 15 minutes before checking or adjusting charge.

**⚠ WARNING**

**EXPLOSION HAZARD**

Failure to follow this warning could result in death, serious personal injury, and/or property damage.

Never use air or gases containing oxygen for leak testing or operating refrigerant compressors. Pressurized mixtures of air or gases containing oxygen can lead to an explosion.

**NOTE**: Adjustment of the refrigerant charge is not required unless the unit is suspected of not having the proper Puron® (R-410A) charge.

**NOTE**: Some units have fixed orifice refrigerant metering devices. There is a different charging procedure for both expansion devices. Refer to the correct procedure for your unit.

The charging label and the tables shown refer to system temperatures and pressures in cooling mode only. A refrigerant charging label is attached to the inside of the compressor access panel. (See Table 9 Subcool chart for units with TXV and superheat chart for units with fixed orifice.) The chart includes the required liquid line temperature at given discharge line pressures and outdoor ambient temperatures.

A superheat chart is attached to the inside of the compressor access panel for the unit with fixed metering device. Refer to the charging procedure on the label.

An accurate thermocouple- or thermistor-type thermometer, and a gauge manifold are required when using the subcooling charging method for evaluating the unit charge. Do not use mercury or small dial-type thermometers because they are not adequate for this type of measurement.

**⚠ CAUTION**

**UNIT DAMAGE HAZARD**

Failure to follow this caution may result in unit damage.

When evaluating the refrigerant charge, an indicated adjustment to the specified factory charge must always be very minimal. If a substantial adjustment is indicated, an abnormal condition exists somewhere in the cooling system, such as insufficient airflow across either coil or both coils.

Proceed as follows:

1. Remove caps from low- and high-pressure service fittings.
2. Using hoses with valve core depressors, attach low- and high-pressure gauge hoses to low- and high-pressure service fittings, respectively.
3. Start unit in Cooling Mode and let unit run until system pressures stabilize.
4. Measure and record the following:
   a. Outdoor ambient-air temperature (°F [°C] db).
   b. Liquid line temperature (°F [°C]).
   c. Discharge (high-side) pressure (psig).
   d. Suction (low-side) pressure (psig) (for reference only).
5. Using "Cooling Charging Charts," compare outdoor-air temperature(°F [°C] db) with the discharge line pressure (psig) to determine desired system operating liquid line temperature (See Table 9).
6. Compare actual liquid line temperature with desired liquid line temperature. Using a tolerance of ± 2°F (±1.1°C), add refrigerant if actual temperature is more than 2°F (1.1°C) higher than proper liquid line temperature, or remove refrigerant if actual temperature is more than 2°F (1.1°C) lower than required liquid line temperature.

**NOTE**: If the problem causing the inaccurate readings is a refrigerant leak, refer to the Check for Refrigerant Leaks section.

## Indoor Airflow and Airflow Adjustments

**⚠ CAUTION**

**UNIT OPERATION HAZARD**

Failure to follow this caution may result in unit damage.

For cooling operation, the recommended airflow is 350 to 450 cfm for each 12,000 Btuh of rated cooling capacity. For heating operation, the airflow must produce a temperature rise that falls within the range stamped on the unit rating plate.

**NOTE**: Be sure that all supply-and return-air grilles are open, free from obstructions, and adjusted properly.

**⚠ WARNING**

**ELECTRICAL SHOCK HAZARD**

Failure to follow this warning could result in personal injury or death.

Disconnect electrical power to the unit and install lockout tag before changing blower speed.

This unit has independent fan speeds for gas heating and cooling modes. Single phase models also have a dedicated continuous fan speed. All models (1 phase and 3 phase), have a field-selectable capability to run two different cooling speeds: A normal cooling fan speed (350-450 CFM/Ton) and an enhanced dehumidification fan speed (As low as 320 CFM/Ton) for use with either a dehumidistat or a thermostat that supports dehumidification.

This unit is factory-set for use with a single cooling fan speed. For single phase models, the cooling speed is marked "COOL" on the IGC (See Fig. 17). For 3-phase models, the cooling speed is marked "LOW" on the interface board (IFB)(See Fig. 18). The factory-shipped settings are noted in Tables 10 and 11. There are up to 3 additional speed tap wires available for use in either gas heating mode, cooling mode, or continuous fan mode (For color coding on the indoor fan motor leads, see Table 8). For single phase models, one of the additional speed tap wires is connected to the continuous fan, with the other 2 wires shipped loose in the control box near the IGC. For three phase models, the additional 3 speed tap wires are shipped loose with vinyl caps and are located in the control box near the interface fan board (IFB) (See Fig. 18).

## Gas Heating Fan Speed Set-up (Single Phase Models):

To change the gas heating speed:

1. Remove existing speed tap wire from the "HEAT" terminal on the IGC.
2. Connect the desired speed tap wire on the "HEAT" terminal on the IGC board. Make sure that the speed chosen delivers temperature rise within the rise range listed on the unit.

## Gas Heating Fan Speed Set-up (3 Phase Models)

To change the gas heating speed:

1. Remove the vinyl cap off of the desired speed tap wire (Refer to Table 8 for color coding). Table 11 and 12 show

the temperature rise associated with each fan speed for a given static pressure. Make sure that the speed chosen delivers a temperature rise within the rise range listed on the unit rating plate.

2. Remove the current speed tap wire from the "GAS HEAT" terminal on the interface fan board (IFB) (Fig.18) and place vinyl cap over the connector on the wire.
3. Connect the desired speed tap wire to the "GAS HEAT" terminal on the interface fan board (IFB).

## Cooling Fan Speed Set-up (Dehumidification feature not used) (Single Phase Models):

To change cooling speed:

1. Remove existing speed tap wire from the "COOL" terminal on the IGC board. Add the wet coil pressure drop in Table 14 to the system static to determine the correct cooling airflow speed in Table 8 that will deliver the nominal cooling airflow listed in Table 1 for each size.
2. Connect the desired speed tap wire on the "COOL" terminal on the IGC board.

## Single Cooling Fan Speed Set-up (Dehumidification feature not used) (3 Phase Models)

To change cooling speed:

1. Remove the vinyl cap off of the desired speed tap wire (Refer to Table 8 for color coding). Add the wet coil pressure drop in Table 14 to the system static to determine the correct cooling airflow speed in Table 11 or 12 that will deliver the nominal cooling airflow as listed in Table 1 for each size.
2. Remove the current speed tap wire from the "LOW" terminal on the interface fan board (IFB) (See Fig. 18) and place vinyl cap over the connector on the wire.
3. Connect the desired speed tap wire to the "LOW" terminal on the interface fan board (IFB).

## Dehumidification Cooling Fan Speed Set-up (Single Phase Models):

**IMPORTANT**: Dehumidification control must open control circuit on humidity rise above set point.

Use of the dehumidification cooling fan speed requires use of either a 24 VAC dehumidistat or a thermostat which includes control of a 24 VAC dehumidistat connection. In either case, the dehumidification control must open the control circuit on humidity rise above the dehumidification set point.

1. Move shunt jumper on IGD board to "DH" (See Fig. 17).
2. Refer to airflow table (Table 10) to determine allowable speeds for the dehumidification cooling fan speed. Speeds that are not allowed are shaded in Table 10.
3. Connect selected speed tap wire to "DHUM" terminal on the IGC board. Verify that static pressure is in the acceptable range for the speed tap to be used for dehumidification cooling.

## Two Cooling Fan Speeds Set-up (Dehumidification feature used) (3 Phase Models)

**IMPORTANT**: Dehumidification control must open control circuit on humidity rise above set point.

Use of the dehumidification cooling fan speed requires use of either a 24 VAC dehumidistat or a thermostat which includes control of a 24 VAC dehumidistat connection. In either case, the dehumidification control must open the control circuit on humidity rise above the dehumidification set point.

1. Remove fan speed tap wire from the "LOW" terminal on the interface fan board (IFB) (See Fig. 18).
2. Determine correct normal cooling fan speed for unit and application. Add the wet coil pressure drop in Table 14 to the system static to determine the correct cooling airflow speed in Table 11 or 12 that will deliver the nominal cooling airflow as listed in Table 1 for each size.
3. Remove the vinyl cap off of the desired speed tap wire (Refer to Table 8 for color coding) for the normal cooling fan speed and place desired speed tap wire on "HIGH" on the interface board.
4. Refer to airflow tables (Table 11 or 12) to determine allowable speeds for the dehumidification cooling fan speed. In Table 11 or 12, speeds that are not allowed for dehumidification cooling are shaded.
5. Remove the vinyl cap off of the desired speed tap wire (Refer to Table 8 for color coding) for the dehumidification cooling fan speed and place desired speed tap wire on the "LOW" connection on the interface board (IFB). Verify that static pressure is in the acceptable range for the speed tap to be used for dehumidification cooling.
6. Use any spare vinyl plugs to cap any unused speed tap wires.

**NOTE**: For cooling operation, the recommended airflow is 350 to 450 CFM for each 12,000 Btuh of rated cooling capacity.

## Continuous Fan Speed Set-up (Single Phase Models):

To change continuous fan speed:

1. Remove existing speed tap wire from the "FAN" terminal on the IGC.
2. Connect the desired speed tap wire on the "FAN" terminal on the IGC board.

## Continuous Fan Operation (3 Phase Models)

When the DEHUM feature is not used, the continuous fan speed will be the same as cooling fan speed. When the DEHUM feature is used, the continuous fan will operate on IFB "LOW" speed when the DH control lead is not energized, or IFB "HIGH" speed when the DH lead is energized (see Fig. 18).

**Table 8 – Color Coding for Indoor Fan Motor Leads**

| |
|---|
| Black = High Speed |
| Orange = Med–High Speed |
| Red = Med Speed |
| Pink = Med–Low Speed |
| Blue = Low Speed |

## Cooling Sequence of Operation

With the room thermostat SYSTEM switch in the COOL position and the FAN switch in the AUTO position, the cooling sequence of operation is as follows:

1. When the room temperature rises to a point that is slightly above the cooling control setting of the thermostat, the thermostat completes the circuit between thermostat terminal R to terminals Y and G.
2. The normally open contacts of energized contactor (C) close and complete the circuit through compressor motor (COMP) to condenser (outdoor) fan motor (OFM). Both motors start instantly.
3. The set of normally open contacts on the interface fan board (IFB) are closed which energizes a circuit to the indoor fan motor (IFM).

**NOTE**: Once the compressor has started and then stopped, it should not be started again until 5 minutes have elapsed. The cooling cycle remains on until the room temperature drops to a point that is slightly below the cooling control setting of the room thermostat. At this point, the thermostat breaks the circuit between thermostat terminal R to terminals Y and G. These open circuits deenergize contactor coil C. The condenser and compressor motors stop. After a 60-sec. delay, the blower motor stops. The unit is in a standby condition, waiting for the next call for cooling from the room thermostat.

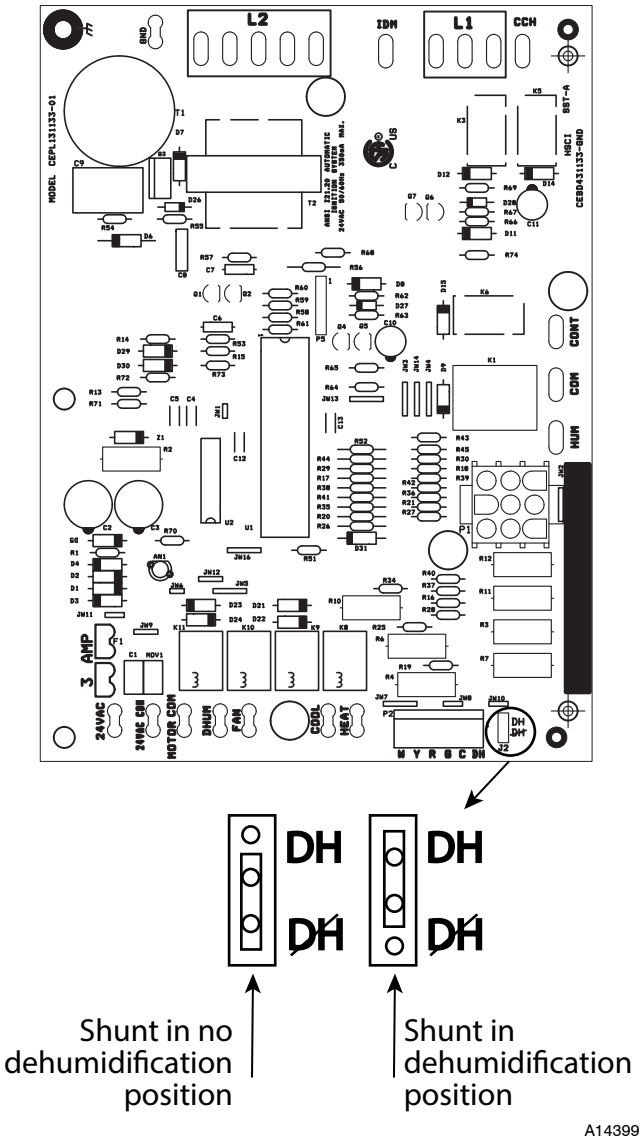


**Fig. 17 - Single Phase IGC Board**

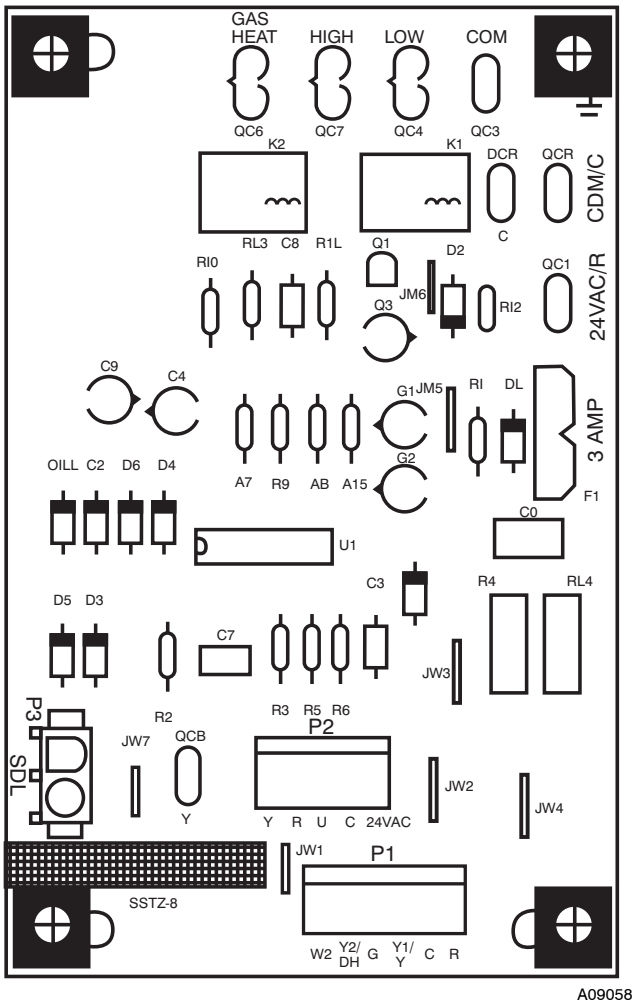


**Fig. 18 - Interface Fan Board (IFB)**

# Table 9 – Cooling Charging Chart

**SUPERHEAT CHARGING TABLE**
(SUPERHEAT °F (°C) AT COMPRESSOR SUCTION SERVICE PORT)

| OUTDOOR TEMP °F (°C) | EVAPORATOR ENTERING AIR °F (°C) WB | | | | | | | | | | | | | | |
|---|---|---|---|---|---|---|---|---|---|---|---|---|---|---|---|
| | 50 (10) | 52 (11) | 54 (12) | 56 (13) | 58 (14) | 60 (16) | 62 (17) | 64 (18) | 66 (19) | 68 (20) | 70 (21) | 72 (22) | 74 (23) | 76 (24) |
| 55 (12.7) | 9 (5.0) | 12 (6.7) | 14 (7.8) | 17 (9.4) | 20 (11) | 23 (13) | 26 (14) | 29 (16) | 32 (18) | 35 (19) | 37 (21) | 40 (22) | 42 (23) | 45 (25) |
| 60 (15.6) | 7 (3.9) | 10 (5.6) | 12 (6.7) | 15 (8.3) | 18 (10) | 21 (12) | 24 (13) | 27 (15) | 30 (17) | 33 (18) | 35 (19) | 38 (21) | 40 (22) | 43 (24) |
| 65 (18.3) | – | 6 (3.3) | 10 (5.6) | 13 (7.2) | 16 (8.9) | 19 (11) | 21 (12) | 24 (13) | 27 (15) | 30 (17) | 33 (18) | 36 (20) | 38 (21) | 41 (23) |
| 70 (21.1) | – | – | 7 (3.9) | 10 (5.6) | 13 (7.2) | 16 (8.9) | 19 (11) | 21 (12) | 24 (13) | 27 (15) | 30 (17) | 33 (18) | 36 (20) | 39 (22) |
| 75 (23.9) | – | – | – | 6 (3.3) | 9 (5.0) | 12 (6.7) | 15 (8.3) | 18 (10) | 21 (12) | 24 (13) | 28 (16) | 31 (17) | 34 (19) | 37 (21) |
| 80 (26.7) | – | – | – | – | 5 (2.8) | 8 (4.4) | 12 (6.7) | 15 (8.3) | 18 (10) | 21 (12) | 25 (14) | 28 (16) | 31 (17) | 35 (19) |
| 85 (29.4) | – | – | – | – | – | – | 8 (4.4) | 11 (6.1) | 15 (8.3) | 19 (11) | 22 (12) | 26 (14) | 30 (17) | 33 (18) |
| 90 (32.2) | – | – | – | – | – | – | 5 (2.8) | 9 (5.0) | 13 (7.2) | 16 (8.9) | 20 (11) | 24 (13) | 27 (15) | 31 (17) |
| 95 (35.0) | – | – | – | – | – | – | – | 6 (3.3) | 10 (5.6) | 14 (7.8) | 18 (10) | 22 (12) | 25 (14) | 29 (16) |
| 100 (37.7) | – | – | – | – | – | – | – | – | 8 (4.4) | 12 (6.7) | 15 (8.3) | 20 (11) | 23 (13) | 27 (15) |
| 105 (40.6) | – | – | – | – | – | – | – | – | 5 (2.8) | 9 (5.0) | 13 (7.2) | 17 (9.4) | 22 (12) | 26 (14) |
| 110 (43.3) | – | – | – | – | – | – | – | – | – | 6 (3.3) | 11 (6.1) | 15 (8.3) | 20 (11) | 25 (14) |
| 115 (46.1) | – | – | – | – | – | – | – | – | – | – | 8 (4.4) | 14 (7.8) | 18 (10) | 23 (13) |

**REQUIRED SUCTION TUBE TEMPERATURE °F (°C)**
(MEASURED AT COMPRESSOR SUCTION SERVICE PORT)

| SUPERHEAT TEMP °F (°C) | SUCTION PRESSURE AT SUCTION SERVICE PORT PSIG (kPa) | | | | | | | | |
|---|---|---|---|---|---|---|---|---|---|
| | 107 (738) | 111 (766) | 116 (800) | 120 (828) | 125 (862) | 130 (897) | 135 (931) | 140 (966) | 145 (1000) |
| 0 (0) | 35 (1.7) | 37 (2.8) | 39 (3.9) | 41 (5.0) | 43 (6.1) | 45 (7.2) | 47 (8.3) | 49 (9.4) | 51 (11) |
| 2 (1.1) | 37 (2.8) | 39 (3.9) | 41 (5.0) | 43 (6.1) | 45 (7.2) | 47 (8.3) | 49 (9.4) | 51 (11) | 53 (12) |
| 4 (2.2) | 39 (3.9) | 41 (5.0) | 43 (6.1) | 45 (7.2) | 47 (8.3) | 49 (9.4) | 51 (11) | 53 (12) | 55 (13) |
| 6 (3.3) | 41 (5.0) | 43 (6.1) | 45 (7.2) | 47 (8.3) | 49 (9.4) | 51 (11) | 53 (12) | 55 (13) | 57 (14) |
| 8 (4.4) | 43 (6.1) | 45 (7.2) | 47 (8.3) | 49 (9.4) | 51 (11) | 53 (12) | 55 (13) | 57 (14) | 59 (15) |
| 10 (5.6) | 45 (7.2) | 47 (8.3) | 49 (9.4) | 51 (11) | 53 (12) | 55 (13) | 57 (14) | 59 (15) | 61 (16) |
| 12 (6.7) | 47 (8.3) | 49 (9.4) | 51 (11) | 53 (12) | 55 (13) | 57 (14) | 59 (15) | 61 (16) | 63 (17) |
| 14 (7.8) | 49 (9.4) | 51 (11) | 53 (12) | 55 (13) | 57 (14) | 59 (15) | 61 (16) | 63 (17) | 65 (18) |
| 16 (8.9) | 51 (11) | 53 (12) | 55 (13) | 57 (14) | 59 (15) | 61 (16) | 63 (17) | 65 (18) | 67 (19) |
| 18 (10.0) | 53 (12) | 55 (13) | 57 (14) | 59 (15) | 61 (16) | 63 (17) | 65 (18) | 67 (19) | 69 (21) |
| 20 (11.1) | 55 (13) | 57 (14) | 59 (15) | 61 (16) | 63 (17) | 65 (18) | 67 (19) | 69 (21) | 71 (22) |
| 22 (12.2) | 57 (14) | 59 (15) | 61 (16) | 63 (17) | 65 (18) | 67 (19) | 69 (21) | 71 (22) | 73 (23) |
| 24 (13.3) | 59 (15) | 61 (16) | 63 (17) | 65 (18) | 67 (19) | 69 (21) | 71 (22) | 73 (23) | 75 (24) |
| 26 (14.4) | 61 (16) | 63 (17) | 65 (18) | 67 (19) | 69 (21) | 71 (22) | 73 (23) | 75 (24) | 77 (25) |
| 28 (15.6) | 63 (17) | 65 (18) | 67 (19) | 69 (21) | 71 (22) | 73 (23) | 75 (24) | 77 (25) | 79 (26) |
| 30 (16.7) | 65 (18) | 67 (19) | 69 (21) | 71 (22) | 73 (23) | 75 (24) | 77 (25) | 79 (26) | 81 (27) |
| 32 (17.8) | 67 (19) | 69 (21) | 71 (22) | 73 (23) | 75 (24) | 77 (25) | 79 (26) | 81 (27) | 83 (28) |
| 34 (18.9) | 69 (21) | 71 (22) | 73 (23) | 75 (24) | 79 (26) | 79 (26) | 81 (27) | 83 (28) | 85 (29) |
| 36 (20.0) | 71 (22) | 73 (23) | 75 (24) | 81 (27) | 81 (27) | 81 (27) | 83 (28) | 85 (29) | 87 (31) |
| 38 (21.1) | 73 (23) | 75 (24) | 83 (28) | 83 (28) | 83 (28) | 83 (28) | 85 (29) | 87 (31) | 89 (32) |
| 40 (22.2) | 75 (24) | 85 (29) | 85 (29) | 85 (29) | 85 (29) | 85 (29) | 87 (31) | 89 (32) | 91 (33) |

50ZH500518 REV. A

## COOLING ONLY CHARGING PROCEDURE

1. Operate unit a minimum of 10 minutes before checking charge.
2. Measure suction pressure by attaching an accurate gauge to compressor suction side service port.
3. Measure suction side temperature by attaching an accurate thermisitor type or electronic thermometer to suction line about 10 inches from compressor.
4. Measure outdoor air dry-bulb temperature with thermometer.
5. Measure indoor air (return air) wet-bulb temperature with a sling psychrometer or electronic equivalent.
6. Using Superheat Charging Table find outdoor temperature and indoor air wet-bulb temperature. At this intersection note superheat. Where a dash (–) appears on table do not attempt to charge unit under these conditions or refrigerant slugging may occur. In this situation refrigerant must be evacuated and weighed in. See rating plate for charge quantity.
7. Refer to Required Suction Tube Temp. table. Find superheat temperature located in step 6 and suction pressure. At this intersection note suction line temperature.
8. If unit has a higher suction line temperature than charted temperature, add refrigerant until charted temperature is reached.
9. If unit has a lower suction line temperature than charted temperature, reclaim refrigerant until charted temperature is reached.
10. If outdoor air temperature or pressure at suction port changes, charge to new suction line temperature indicated on chart.

50ZH500518 REV. A

Superheat charging table is derived from optimum performance point. (95°F [35°C] outdoor ambient and (80°F [27°C] dry bulb; 67°F [19°C] wet bulb indoor condition.) Where a dash(– –) appears do not attempt to check charge or charge unit under these conditions using the superheat method. (Weigh in method should be used.)

A150625

**Required Subcooling °F(°C)**

| Model Size | Outdoor Ambient Temperature °F(°C) | | | | |
|---|---|---|---|---|---|
| | 75 (24) | 85 (29) | 95 (35) | 105 (41) | 115 (46) |
| 036 | 13 (7) | 13 (7.2) | 13 (7.3) | 13(7.4) | 14(7.7) |

**Charging Procedure**

1- Measure Discharge line pressure by attaching a gauge to the service port.

2- Measure the Liquid line temperature by attaching a temperature sensing device to it.

3- Insulate the temperature sensing device so that the Outdoor Ambient doesn't affect the reading.

4- Refer to the required Subcooling in the table based on the model size and the Outdoor Ambient temperature.

5- Interpolate if the Outdoor ambient temperature lies in between the table values.

6- Find the Pressure Value in the table corresponding to the the measured Pressure of the Compressor Discharge line.

7- Read across from the Pressure reading to obtain the Liquid line temperature for a required Subcooling

8- Add Charge if the measured temperature is higher than the table value.

9 - Remove charge if the measured temperature is lower than the table value.

50VL500709 REV. -

**Required Liquid Line Temperature for a Specific Subcooling (R-410A)**

| Pressure (psig) | Required Subcooling (°F) 5 | 10 | 15 | 20 | 25 |
|---|---|---|---|---|---|
| 189 | 61 | 56 | 51 | 46 | 41 |
| 196 | 63 | 58 | 53 | 48 | 43 |
| 203 | 66 | 61 | 56 | 51 | 46 |
| 210 | 68 | 63 | 58 | 53 | 48 |
| 217 | 70 | 65 | 60 | 55 | 50 |
| 224 | 72 | 67 | 62 | 57 | 52 |
| 231 | 74 | 69 | 64 | 59 | 54 |
| 238 | 76 | 71 | 66 | 61 | 56 |
| 245 | 77 | 72 | 67 | 62 | 57 |
| 252 | 79 | 74 | 69 | 64 | 59 |
| 260 | 81 | 76 | 71 | 66 | 61 |
| 268 | 83 | 78 | 73 | 68 | 63 |
| 276 | 85 | 80 | 75 | 70 | 65 |
| 284 | 87 | 82 | 77 | 72 | 67 |
| 292 | 89 | 84 | 79 | 74 | 69 |
| 300 | 91 | 86 | 81 | 76 | 71 |
| 309 | 93 | 88 | 83 | 78 | 73 |
| 318 | 95 | 90 | 85 | 80 | 75 |
| 327 | 97 | 92 | 87 | 82 | 77 |
| 336 | 99 | 94 | 89 | 84 | 79 |
| 345 | 101 | 96 | 91 | 86 | 81 |
| 354 | 103 | 98 | 93 | 88 | 83 |
| 364 | 105 | 100 | 95 | 90 | 85 |
| 374 | 107 | 102 | 97 | 92 | 87 |
| 384 | 108 | 103 | 98 | 93 | 88 |
| 394 | 110 | 105 | 100 | 95 | 90 |
| 404 | 112 | 107 | 102 | 97 | 92 |
| 414 | 114 | 109 | 104 | 99 | 94 |
| 424 | 116 | 111 | 106 | 101 | 96 |
| 434 | 118 | 113 | 108 | 103 | 98 |
| 444 | 119 | 114 | 109 | 104 | 99 |
| 454 | 121 | 116 | 111 | 106 | 101 |
| 464 | 123 | 118 | 113 | 108 | 103 |
| 474 | 124 | 119 | 114 | 109 | 104 |
| 484 | 126 | 121 | 116 | 111 | 106 |
| 494 | 127 | 122 | 117 | 112 | 107 |
| 504 | 129 | 124 | 119 | 114 | 109 |
| 514 | 131 | 126 | 121 | 116 | 111 |
| 524 | 132 | 127 | 122 | 117 | 112 |
| 534 | 134 | 129 | 124 | 119 | 114 |

| Pressure (kPa) | Required Subcooling (°C) 3 | 6 | 8 | 11 | 14 |
|---|---|---|---|---|---|
| 1303 | 16 | 13 | 11 | 8 | 5 |
| 1351 | 17 | 15 | 12 | 9 | 6 |
| 1399 | 19 | 16 | 13 | 10 | 8 |
| 1448 | 20 | 17 | 14 | 11 | 9 |
| 1496 | 21 | 18 | 15 | 13 | 10 |
| 1544 | 22 | 19 | 16 | 14 | 11 |
| 1593 | 23 | 20 | 18 | 15 | 12 |
| 1641 | 24 | 21 | 19 | 16 | 13 |
| 1689 | 25 | 22 | 20 | 17 | 14 |
| 1737 | 26 | 23 | 21 | 18 | 15 |
| 1792 | 27 | 25 | 22 | 19 | 16 |
| 1848 | 29 | 26 | 23 | 20 | 17 |
| 1903 | 30 | 27 | 24 | 21 | 19 |
| 1958 | 31 | 28 | 25 | 22 | 20 |
| 2013 | 32 | 29 | 26 | 23 | 21 |
| 2068 | 33 | 30 | 27 | 24 | 22 |
| 2130 | 34 | 31 | 28 | 26 | 23 |
| 2192 | 35 | 32 | 29 | 27 | 24 |
| 2254 | 36 | 33 | 31 | 28 | 25 |
| 2316 | 37 | 34 | 32 | 29 | 26 |
| 2378 | 38 | 35 | 33 | 30 | 27 |
| 2440 | 39 | 36 | 34 | 31 | 28 |
| 2509 | 40 | 38 | 35 | 32 | 29 |
| 2578 | 41 | 39 | 36 | 33 | 30 |
| 2647 | 42 | 40 | 37 | 34 | 31 |
| 2716 | 44 | 41 | 38 | 35 | 32 |
| 2785 | 45 | 42 | 39 | 36 | 33 |
| 2854 | 46 | 43 | 40 | 37 | 34 |
| 2923 | 47 | 44 | 41 | 38 | 35 |
| 2992 | 48 | 45 | 42 | 39 | 36 |
| 3061 | 48 | 46 | 43 | 40 | 37 |
| 3130 | 49 | 47 | 44 | 41 | 38 |
| 3199 | 50 | 48 | 45 | 42 | 39 |
| 3268 | 51 | 48 | 46 | 43 | 40 |
| 3337 | 52 | 49 | 47 | 44 | 41 |
| 3406 | 53 | 50 | 47 | 45 | 42 |
| 3475 | 54 | 51 | 48 | 46 | 43 |
| 3544 | 55 | 52 | 49 | 46 | 44 |
| 3612 | 56 | 53 | 50 | 47 | 45 |
| 3681 | 56 | 54 | 51 | 48 | 45 |

50VL500709 REV. -

To properly check or adjust charge, conditions must be favorable for subcooling charging. Favorable conditions exist when the outdoor temperature is between 75°F to 115°F (24°C and 46°C), and the indoor temperature is between 70°F and 80°F (21°C and 27°C). Follow the procedure above.

A150626

**Table 10 – Dry Coil Air Delivery* - Horizontal and Downflow Discharge - Sizes 24-60 208/230VAC - 1 Phase**

| Unit Size | Heating Rise Range °F (°C) | Motor Speed | Wire Color | | External Static Pressure (IN. W.C.) | | | | | | | | | |
|---|---|---|---|---|---|---|---|---|---|---|---|---|---|---|
| | | | | | 0.1 | 0.2 | 0.3 | 0.4 | 0.5 | 0.6 | 0.7 | 0.8 | 0.9 | 1 |
| 24040 | 25 – 55 (14 – 31) | Low[1] | Blue | CFM | 669 | 580 | 525 | 423 | 303 | – – – | – – – | – – – | – – – | – – – |
| | | | | BHP | 0.09 | 0.10 | 0.11 | 0.11 | 0.12 | – – – | – – – | – – – | – – – | – – – |
| | | | | Heat Rise (°F) | 44 | 51 | NA | NA | NA | NA | NA | NA | NA | NA |
| | | | | Heat Rise (°C) | 25 | 29 | NA | NA | NA | NA | NA | NA | NA | NA |
| | | Med – Low[2] | Pink | CFM | 829 | 752 | 680 | 602 | 549 | 455 | 313 | – – – | – – – | – – – |
| | | | | BHP | 0.14 | 0.15 | 0.15 | 0.16 | 0.17 | 0.17 | 0.18 | – – – | – – – | – – – |
| | | | | Heat Rise (°F) | 36 | 40 | 44 | 49 | 54 | NA | NA | NA | NA | NA |
| | | | | Heat Rise (°C) | 20 | 22 | 24 | 27 | 50 | NA | NA | NA | NA | NA |
| | | Medium[3] | Red | CFM | 1014 | 929 | 884 | 818 | 746 | 683 | 600 | 537 | 405 | 305 |
| | | | | BHP | 0.24 | 0.24 | 0.24 | 0.25 | 0.26 | 0.26 | 0.27 | 0.27 | 0.27 | 0.29 |
| | | | | Heat Rise (°F) | 29 | 32 | 34 | 36 | 40 | 44 | 50 | 55 | NA | NA |
| | | | | Heat Rise (°C) | 16 | 18 | 19 | 20 | 22 | 24 | 28 | 31 | NA | NA |
| | | Med – High | Orange | CFM | 1041 | 972 | 916 | 850 | 782 | 713 | 631 | 581 | 465 | 340 |
| | | | | BHP | 0.25 | 0.26 | 0.26 | 0.26 | 0.26 | 0.27 | 0.28 | 0.29 | 0.30 | 0.31 |
| | | | | Heat Rise (°F) | 29 | 31 | 32 | 35 | 38 | 42 | 47 | 51 | NA | NA |
| | | | | Heat Rise (°C) | 16 | 17 | 18 | 19 | 21 | 23 | 26 | 28 | NA | NA |
| | | High | Black | CFM | 1187 | 1124 | 1061 | 996 | 930 | 896 | 840 | 776 | 698 | 610 |
| | | | | BHP | 0.36 | 0.36 | 0.37 | 0.37 | 0.38 | 0.38 | 0.39 | 0.39 | 0.39 | 0.40 |
| | | | | Heat Rise (°F) | 25 | 26 | 28 | 30 | 32 | 33 | 35 | 38 | 43 | 49 |
| | | | | Heat Rise (°C) | 14 | 15 | 16 | 17 | 18 | 18 | 20 | 21 | 24 | 27 |
| 24060 | 25 – 55 (14 – 31) | Low[3] | Blue | CFM | 669 | 580 | 525 | 423 | 303 | – – – | – – – | – – – | – – – | – – – |
| | | | | BHP | 0.09 | 0.10 | 0.11 | 0.11 | 0.12 | – – – | – – – | – – – | – – – | – – – |
| | | | | Heat Rise (°F) | NA | NA | NA | NA | NA | NA | NA | NA | NA | NA |
| | | | | Heat Rise (°C) | NA | NA | NA | NA | NA | NA | NA | NA | NA | NA |
| | | Med – Low[2] | Pink | CFM | 829 | 752 | 680 | 602 | 549 | 455 | 313 | – – – | – – – | – – – |
| | | | | BHP | 0.14 | 0.15 | 0.15 | 0.16 | 0.17 | 0.17 | 0.18 | – – – | – – – | – – – |
| | | | | Heat Rise (°F) | 54 | NA | NA | NA | NA | NA | NA | NA | NA | NA |
| | | | | Heat Rise (°C) | 30 | NA | NA | NA | NA | NA | NA | NA | NA | NA |
| | | Medium | Red | CFM | 1014 | 929 | 884 | 818 | 746 | 683 | 600 | 537 | 405 | 305 |
| | | | | BHP | 0.24 | 0.24 | 0.24 | 0.25 | 0.26 | 0.26 | 0.27 | 0.27 | 0.27 | 0.29 |
| | | | | Heat Rise (°F) | 44 | 48 | 51 | 55 | NA | NA | NA | NA | NA | NA |
| | | | | Heat Rise (°C) | 25 | 27 | 28 | 30 | NA | NA | NA | NA | NA | NA |
| | | Med – High[1] | Orange | CFM | 1041 | 972 | 916 | 850 | 782 | 713 | 631 | 581 | 465 | 340 |
| | | | | BHP | 0.25 | 0.26 | 0.26 | 0.26 | 0.26 | 0.27 | 0.28 | 0.29 | 0.30 | 0.31 |
| | | | | Heat Rise (°F) | 43 | 46 | 49 | 53 | NA | NA | NA | NA | NA | NA |
| | | | | Heat Rise (°C) | 24 | 26 | 27 | 29 | NA | NA | NA | NA | NA | NA |
| | | High | Black | CFM | 1187 | 1124 | 1061 | 996 | 930 | 896 | 840 | 776 | 698 | 610 |
| | | | | BHP | 0.36 | 0.36 | 0.37 | 0.37 | 0.38 | 0.38 | 0.39 | 0.39 | 0.39 | 0.40 |
| | | | | Heat Rise (°F) | 38 | 40 | 42 | 45 | 48 | 50 | 53 | NA | NA | NA |
| | | | | Heat Rise (°C) | 21 | 22 | 23 | 25 | 27 | 28 | 30 | NA | NA | NA |

Table 10 - Dry Coil Air Delivery* - Horizontal and Downflow Discharge - Sizes 24-60 208/230VAC - 1 Phase (Cont.)

| Unit Size | Heating Rise Range °F (°C) | Motor Speed | Wire Color | | External Static Pressure (IN. W.C.) | | | | | | | | | |
|---|---|---|---|---|---|---|---|---|---|---|---|---|---|---|
| | | | | | 0.1 | 0.2 | 0.3 | 0.4 | 0.5 | 0.6 | 0.7 | 0.8 | 0.9 | 1 |
| 30040 | 25 – 55 (14 – 31) | Low[1] | Blue | CFM | 669 | 580 | 525 | 423 | 303 | – – – | – – – | – – – | – – – | – – – |
| | | | | BHP | 0.09 | 0.10 | 0.11 | 0.11 | 0.12 | – – – | – – – | – – – | – – – | – – – |
| | | | | Heat Rise (°F) | 44 | 51 | NA | NA | NA | NA | NA | NA | NA | NA |
| | | | | Heat Rise (°C) | 25 | 29 | NA | NA | NA | NA | NA | NA | NA | NA |
| | | Med – Low[3] | Pink | CFM | 829 | 752 | 680 | 602 | 549 | 455 | 313 | – – – | – – – | – – – |
| | | | | BHP | 0.14 | 0.15 | 0.15 | 0.16 | 0.17 | 0.17 | 0.18 | – – – | – – – | – – – |
| | | | | Heat Rise (°F) | 36 | 40 | 44 | 49 | 54 | NA | NA | NA | NA | NA |
| | | | | Heat Rise (°C) | 20 | 22 | 24 | 27 | 30 | NA | NA | NA | NA | NA |
| | | Medium[2] | Red | CFM | 1014 | 929 | 884 | 818 | 746 | 683 | 600 | 537 | 405 | 305 |
| | | | | BHP | 0.24 | 0.24 | 0.24 | 0.25 | 0.26 | 0.26 | 0.27 | 0.27 | 0.27 | 0.29 |
| | | | | Heat Rise (°F) | 29 | 32 | 34 | 36 | 40 | 44 | 50 | 55 | NA | NA |
| | | | | Heat Rise (°C) | 16 | 18 | 19 | 20 | 22 | 24 | 28 | 31 | NA | NA |
| | | Med – High | Orange | CFM | 1041 | 972 | 916 | 850 | 782 | 713 | 631 | 581 | 465 | 340 |
| | | | | BHP | 0.25 | 0.26 | 0.26 | 0.26 | 0.26 | 0.27 | 0.28 | 0.29 | 0.30 | 0.31 |
| | | | | Heat Rise (°F) | 29 | 31 | 32 | 35 | 38 | 42 | 47 | 51 | NA | NA |
| | | | | Heat Rise (°C) | 16 | 17 | 18 | 19 | 21 | 23 | 26 | 28 | NA | NA |
| | | High | Black | CFM | 1187 | 1124 | 1061 | 996 | 930 | 896 | 840 | 776 | 698 | 610 |
| | | | | BHP | 0.36 | 0.36 | 0.37 | 0.37 | 0.38 | 0.38 | 0.39 | 0.39 | 0.39 | 0.40 |
| | | | | Heat Rise (°F) | 25 | 26 | 28 | 30 | 32 | 33 | 35 | 38 | 43 | 49 |
| | | | | Heat Rise (°C) | 14 | 15 | 16 | 17 | 18 | 18 | 20 | 21 | 24 | 27 |
| 30060 | 25 – 55 (14 – 31) | Low[3] | Blue | CFM | 669 | 580 | 525 | 423 | 303 | – – – | – – – | – – – | – – – | – – – |
| | | | | BHP | 0.09 | 0.10 | 0.11 | 0.11 | 0.12 | – – – | – – – | – – – | – – – | – – – |
| | | | | Heat Rise (°F) | NA | NA | NA | NA | NA | NA | NA | NA | NA | NA |
| | | | | Heat Rise (°C) | NA | NA | NA | NA | NA | NA | NA | NA | NA | NA |
| | | Med – Low | Pink | CFM | 829 | 752 | 680 | 602 | 549 | 455 | 313 | – – – | – – – | – – – |
| | | | | BHP | 0.14 | 0.15 | 0.15 | 0.16 | 0.17 | 0.17 | 0.18 | – – – | – – – | – – – |
| | | | | Heat Rise (°F) | 54 | NA | NA | NA | NA | NA | NA | NA | NA | NA |
| | | | | Heat Rise (°C) | 30 | NA | NA | NA | NA | NA | NA | NA | NA | NA |
| | | Medium[2] | Red | CFM | 1014 | 929 | 884 | 818 | 746 | 683 | 600 | 537 | 405 | 305 |
| | | | | BHP | 0.24 | 0.24 | 0.24 | 0.25 | 0.26 | 0.26 | 0.27 | 0.27 | 0.27 | 0.29 |
| | | | | Heat Rise (°F) | 44 | 48 | 51 | 55 | NA | NA | NA | NA | NA | NA |
| | | | | Heat Rise (°C) | 25 | 27 | 28 | 30 | NA | NA | NA | NA | NA | NA |
| | | Med – High[1] | Orange | CFM | 1041 | 972 | 916 | 850 | 782 | 713 | 631 | 581 | 465 | 340 |
| | | | | BHP | 0.25 | 0.26 | 0.26 | 0.26 | 0.26 | 0.27 | 0.28 | 0.29 | 0.30 | 0.31 |
| | | | | Heat Rise (°F) | 43 | 46 | 49 | 53 | NA | NA | NA | NA | NA | NA |
| | | | | Heat Rise (°C) | 24 | 26 | 27 | 29 | NA | NA | NA | NA | NA | NA |
| | | High | Black | CFM | 1187 | 1124 | 1061 | 996 | 930 | 896 | 840 | 776 | 698 | 610 |
| | | | | BHP | 0.36 | 0.36 | 0.37 | 0.37 | 0.38 | 0.38 | 0.39 | 0.39 | 0.39 | 0.40 |
| | | | | Heat Rise (°F) | 38 | 40 | 42 | 45 | 48 | 50 | 53 | NA | NA | NA |
| | | | | Heat Rise (°C) | 21 | 22 | 23 | 25 | 27 | 28 | 30 | NA | NA | NA |

Table 10 - Dry Coil Air Delivery* - Horizontal and Downflow Discharge - Sizes 24-60 208/230VAC - 1 Phase (Cont.)

| Unit Size | Heating Rise Range °F (°C) | Motor Speed | Wire Color | | External Static Pressure (IN. W.C.) | | | | | | | | | |
|---|---|---|---|---|---|---|---|---|---|---|---|---|---|---|
| | | | | | 0.1 | 0.2 | 0.3 | 0.4 | 0.5 | 0.6 | 0.7 | 0.8 | 0.9 | 1 |
| 36060 | 25 – 55 (14 – 31) | Low[3] | Blue | CFM | 1056 | 982 | 911 | 882 | 812 | 740 | 667 | 564 | 486 | 361 |
| | | | | BHP | 0.24 | 0.24 | 0.24 | 0.26 | 0.26 | 0.27 | 0.28 | 0.29 | 0.30 | 0.30 |
| | | | | Heat Rise (°F) | 42 | 46 | 49 | 51 | 55 | NA | NA | NA | NA | NA |
| | | | | Heat Rise (°C) | 24 | 25 | 27 | 28 | 31 | NA | NA | NA | NA | NA |
| | | Med – Low[1] | Pink | CFM | 1174 | 1107 | 1045 | 985 | 914 | 890 | 825 | 760 | 673 | 572 |
| | | | | BHP | 0.32 | 0.32 | 0.33 | 0.33 | 0.34 | 0.35 | 0.36 | 0.37 | 0.37 | 0.37 |
| | | | | Heat Rise (°F) | 38 | 40 | 43 | 46 | 49 | 50 | 54 | NA | NA | NA |
| | | | | Heat Rise (°C) | 21 | 22 | 24 | 25 | 27 | 28 | 30 | NA | NA | NA |
| | | Medium[2] | Red | CFM | 1246 | 1195 | 1148 | 1081 | 1019 | 953 | 884 | 859 | 795 | 690 |
| | | | | BHP | 0.38 | 0.39 | 0.39 | 0.40 | 0.40 | 0.41 | 0.42 | 0.42 | 0.42 | 0.43 |
| | | | | Heat Rise (°F) | 36 | 38 | 39 | 41 | 44 | 47 | 51 | 52 | NA | NA |
| | | | | Heat Rise (°C) | 20 | 21 | 22 | 23 | 24 | 26 | 28 | 29 | NA | NA |
| | | Med – High | Orange | CFM | 1361 | 1299 | 1229 | 1210 | 1152 | 1092 | 1025 | 958 | 889 | 822 |
| | | | | BHP | 0.48 | 0.49 | 0.49 | 0.50 | 0.50 | 0.51 | 0.51 | 0.51 | 0.51 | 0.52 |
| | | | | Heat Rise (°F) | 33 | 35 | 36 | 37 | 39 | 41 | 44 | 47 | 50 | 55 |
| | | | | Heat Rise (°C) | 18 | 19 | 20 | 21 | 22 | 23 | 24 | 26 | 28 | 30 |
| | | High | Black | CFM | 1596 | 1542 | 1482 | 1424 | 1362 | 1304 | 1238 | 1173 | 1201 | 1143 |
| | | | | BHP | 0.74 | 0.74 | 0.74 | 0.75 | 0.75 | 0.75 | 0.76 | 0.76 | 0.77 | 0.77 |
| | | | | Heat Rise (°F) | 28 | 29 | 30 | 31 | 33 | 34 | 36 | 38 | 37 | 39 |
| | | | | Heat Rise (°C) | 16 | 16 | 17 | 17 | 18 | 19 | 20 | 21 | 21 | 22 |
| 36090 | 35 – 65 (19 – 36) | Low[3] | Blue | CFM | 1056 | 982 | 911 | 882 | 812 | 740 | 667 | 564 | 486 | 361 |
| | | | | BHP | 0.24 | 0.24 | 0.24 | 0.26 | 0.26 | 0.27 | 0.28 | 0.29 | 0.30 | 0.30 |
| | | | | Heat Rise (°F) | 63 | NA | NA | NA | NA | NA | NA | NA | NA | NA |
| | | | | Heat Rise (°C) | 35 | NA | NA | NA | NA | NA | NA | NA | NA | NA |
| | | Med – Low | Pink | CFM | 1174 | 1107 | 1045 | 985 | 914 | 890 | 825 | 760 | 673 | 572 |
| | | | | BHP | 0.32 | 0.32 | 0.33 | 0.33 | 0.34 | 0.35 | 0.36 | 0.37 | 0.37 | 0.37 |
| | | | | Heat Rise (°F) | 57 | 60 | 64 | NA | NA | NA | NA | NA | NA | NA |
| | | | | Heat Rise (°C) | 32 | 34 | 36 | NA | NA | NA | NA | NA | NA | NA |
| | | Medium[2] | Red | CFM | 1246 | 1195 | 1148 | 1081 | 1019 | 953 | 884 | 859 | 795 | 690 |
| | | | | BHP | 0.38 | 0.39 | 0.39 | 0.40 | 0.40 | 0.41 | 0.42 | 0.42 | 0.42 | 0.43 |
| | | | | Heat Rise (°F) | 54 | 56 | 58 | 62 | NA | NA | NA | NA | NA | NA |
| | | | | Heat Rise (°C) | 30 | 31 | 32 | 34 | NA | NA | NA | NA | NA | NA |
| | | Med – High[1] | Orange | CFM | 1361 | 1299 | 1229 | 1210 | 1152 | 1092 | 1025 | 958 | 889 | 822 |
| | | | | BHP | 0.48 | 0.49 | 0.49 | 0.50 | 0.50 | 0.51 | 0.51 | 0.51 | 0.51 | 0.52 |
| | | | | Heat Rise (°F) | 49 | 51 | 54 | 55 | 58 | 61 | 65 | NA | NA | NA |
| | | | | Heat Rise (°C) | 27 | 29 | 30 | 31 | 32 | 34 | 36 | NA | NA | NA |
| | | High | Black | CFM | 1596 | 1542 | 1482 | 1424 | 1362 | 1304 | 1238 | 1173 | 1201 | 1143 |
| | | | | BHP | 0.74 | 0.74 | 0.74 | 0.75 | 0.75 | 0.75 | 0.76 | 0.76 | 0.77 | 0.77 |
| | | | | Heat Rise (°F) | 42 | 43 | 45 | 47 | 49 | 51 | 54 | 57 | 56 | 58 |
| | | | | Heat Rise (°C) | 23 | 24 | 25 | 26 | 27 | 28 | 30 | 32 | 31 | 32 |

**Table 10 - Dry Coil Air Delivery* - Horizontal and Downflow Discharge - Sizes 24-60 208/230VAC - 1 Phase (Cont.)**

| Unit Size | Heating Rise Range °F (°C) | Motor Speed | Wire Color | | External Static Pressure (IN. W.C.) | | | | | | | | | |
|---|---|---|---|---|---|---|---|---|---|---|---|---|---|---|
| | | | | | 0.1 | 0.2 | 0.3 | 0.4 | 0.5 | 0.6 | 0.7 | 0.8 | 0.9 | 1 |
| 42060 | 25 – 55 (14 – 31) | Low[3] | Blue | CFM | 1001 | 902 | 833 | 777 | 717 | 650 | 575 | 527 | 466 | 419 |
| | | | | BHP | 0.13 | 0.13 | 0.14 | 0.14 | 0.15 | 0.16 | 0.17 | 0.18 | 0.19 | 0.20 |
| | | | | Heat Rise (°F) | 45 | 50 | 54 | NA | NA | NA | NA | NA | NA | NA |
| | | | | Heat Rise (°C) | 25 | 28 | 30 | NA | NA | NA | NA | NA | NA | NA |
| | | Med – Low[1] | Pink | CFM | 1016 | 950 | 902 | 842 | 783 | 721 | 655 | 590 | 541 | 480 |
| | | | | BHP | 0.13 | 0.14 | 0.15 | 0.16 | 0.17 | 0.18 | 0.19 | 0.20 | 0.21 | 0.22 |
| | | | | Heat Rise (°F) | 44 | 47 | 50 | 53 | NA | NA | NA | NA | NA | NA |
| | | | | Heat Rise (°C) | 25 | 26 | 28 | 30 | NA | NA | NA | NA | NA | NA |
| | | Medium[2] | Red | CFM | 1403 | 1358 | 1316 | 1265 | 1217 | 1167 | 1116 | 1067 | 1012 | 956 |
| | | | | BHP | 0.29 | 0.30 | 0.31 | 0.33 | 0.34 | 0.35 | 0.36 | 0.37 | 0.38 | 0.39 |
| | | | | Heat Rise (°F) | 32 | 33 | 34 | 35 | 37 | 38 | 40 | 42 | 44 | 47 |
| | | | | Heat Rise (°C) | 18 | 18 | 19 | 20 | 20 | 21 | 22 | 23 | 25 | 26 |
| | | Med – High | Orange | CFM | 1461 | 1411 | 1367 | 1327 | 1275 | 1220 | 1174 | 1127 | 1074 | 1022 |
| | | | | BHP | 0.32 | 0.33 | 0.35 | 0.36 | 0.37 | 0.38 | 0.39 | 0.40 | 0.41 | 0.42 |
| | | | | Heat Rise (°F) | 31 | 32 | 33 | 34 | 35 | 37 | 38 | 40 | 42 | 44 |
| | | | | Heat Rise (°C) | 17 | 18 | 18 | 19 | 20 | 20 | 21 | 22 | 23 | 24 |
| | | High | Black | CFM | 1575 | 1528 | 1488 | 1447 | 1406 | 1360 | 1314 | 1264 | 1213 | 1159 |
| | | | | BHP | 0.40 | 0.42 | 0.43 | 0.44 | 0.45 | 0.46 | 0.47 | 0.48 | 0.49 | 0.50 |
| | | | | Heat Rise (°F) | 28 | 29 | 30 | 31 | 32 | 33 | 34 | 35 | 37 | 39 |
| | | | | Heat Rise (°C) | 16 | 16 | 17 | 17 | 18 | 18 | 19 | 20 | 21 | 21 |
| 42090 | 35 – 65 (19 – 36) | Low[3] | Blue | CFM | 1001 | 902 | 833 | 777 | 717 | 650 | 575 | 527 | 466 | 419 |
| | | | | BHP | 0.13 | 0.13 | 0.14 | 0.14 | 0.15 | 0.16 | 0.17 | 0.18 | 0.19 | 0.20 |
| | | | | Heat Rise (°F) | NA | NA | NA | NA | NA | NA | NA | NA | NA | NA |
| | | | | Heat Rise (°C) | NA | NA | NA | NA | NA | NA | NA | NA | NA | NA |
| | | Med – Low | Pink | CFM | 1016 | 950 | 902 | 842 | 783 | 721 | 655 | 590 | 541 | 480 |
| | | | | BHP | 0.13 | 0.14 | 0.15 | 0.16 | 0.17 | 0.18 | 0.19 | 0.20 | 0.21 | 0.22 |
| | | | | Heat Rise (°F) | NA | NA | NA | NA | NA | NA | NA | NA | NA | NA |
| | | | | Heat Rise (°C) | NA | NA | NA | NA | NA | NA | NA | NA | NA | NA |
| | | Medium[2] | Red | CFM | 1403 | 1358 | 1316 | 1265 | 1217 | 1167 | 1116 | 1067 | 1012 | 956 |
| | | | | BHP | 0.29 | 0.30 | 0.31 | 0.33 | 0.34 | 0.35 | 0.36 | 0.37 | 0.38 | 0.39 |
| | | | | Heat Rise (°F) | 48 | 50 | 51 | 53 | 56 | 58 | 61 | 63 | NA | NA |
| | | | | Heat Rise (°C) | 27 | 28 | 29 | 30 | 31 | 32 | 34 | 35 | NA | NA |
| | | Med – High[1] | Orange | CFM | 1461 | 1411 | 1367 | 1327 | 1275 | 1220 | 1174 | 1127 | 1074 | 1022 |
| | | | | BHP | 0.32 | 0.33 | 0.35 | 0.36 | 0.37 | 0.38 | 0.39 | 0.40 | 0.41 | 0.42 |
| | | | | Heat Rise (°F) | 46 | 48 | 49 | 51 | 53 | 55 | 58 | 60 | 63 | NA |
| | | | | Heat Rise (°C) | 26 | 27 | 27 | 28 | 29 | 31 | 32 | 33 | 35 | NA |
| | | High | Black | CFM | 1575 | 1528 | 1488 | 1447 | 1406 | 1360 | 1314 | 1264 | 1213 | 1159 |
| | | | | BHP | 0.40 | 0.42 | 0.43 | 0.44 | 0.45 | 0.46 | 0.47 | 0.48 | 0.49 | 0.50 |
| | | | | Heat Rise (°F) | 43 | 44 | 45 | 47 | 48 | 50 | 51 | 54 | 56 | 58 |
| | | | | Heat Rise (°C) | 24 | 25 | 25 | 26 | 27 | 28 | 29 | 30 | 31 | 32 |

Table 10 - Dry Coil Air Delivery* - Horizontal and Downflow Discharge - Sizes 24-60 208/230VAC - 1 Phase (Cont.)

| Unit Size | Heating Rise Range °F (°C) | Motor Speed | Wire Color | | External Static Pressure (IN. W.C.) | | | | | | | | | |
|---|---|---|---|---|---|---|---|---|---|---|---|---|---|---|
| | | | | | 0.1 | 0.2 | 0.3 | 0.4 | 0.5 | 0.6 | 0.7 | 0.8 | 0.9 | 1 |
| 48090 | 35 – 65 (19 – 36) | Low[1] | Blue | CFM | 1378 | 1344 | 1295 | 1260 | 1216 | 1179 | 1135 | 1087 | 1035 | 995 |
| | | | | BHP | 0.26 | 0.27 | 0.29 | 0.31 | 0.31 | 0.33 | 0.34 | 0.36 | 0.36 | 0.38 |
| | | | | Heat Rise (°F) | 49 | 50 | 52 | 54 | 56 | 57 | 60 | 62 | 65 | NA |
| | | | | Heat Rise (°C) | 27 | 28 | 29 | 30 | 31 | 32 | 33 | 35 | 36 | NA |
| | | Med – Low[2] | Pink | CFM | 1696 | 1671 | 1631 | 1607 | 1574 | 1539 | 1507 | 1463 | 1432 | 1393 |
| | | | | BHP | 0.45 | 0.47 | 0.49 | 0.50 | 0.52 | 0.52 | 0.54 | 0.55 | 0.57 | 0.58 |
| | | | | Heat Rise (°F) | 40 | 40 | 41 | 42 | 43 | 44 | 45 | 46 | 47 | 49 |
| | | | | Heat Rise (°C) | 22 | 22 | 23 | 23 | 24 | 24 | 25 | 26 | 26 | 27 |
| | | Medium[3] | Red | CFM | 1994 | 1968 | 1943 | 1910 | 1882 | 1835 | 1774 | 1702 | 1614 | 1512 |
| | | | | BHP | 0.72 | 0.73 | 0.75 | 0.76 | 0.78 | 0.78 | 0.76 | 0.73 | 0.70 | 0.66 |
| | | | | Heat Rise (°F) | NA | NA | 35 | 35 | 36 | 37 | 38 | 40 | 42 | 45 |
| | | | | Heat Rise (°C) | NA | NA | 19 | 20 | 20 | 20 | 21 | 22 | 23 | 25 |
| | | Med – High | Orange | CFM | 2054 | 2013 | 1986 | 1964 | 1919 | 1854 | 1779 | 1695 | 1605 | 1498 |
| | | | | BHP | 0.77 | 0.79 | 0.80 | 0.82 | 0.81 | 0.80 | 0.76 | 0.74 | 0.69 | 0.65 |
| | | | | Heat Rise (°F) | NA | NA | NA | NA | 35 | 36 | 38 | 40 | 42 | 45 |
| | | | | Heat Rise (°C) | NA | NA | NA | NA | 20 | 20 | 21 | 22 | 23 | 25 |
| | | High | Black | CFM | 2267 | 2201 | 2133 | 2071 | 1997 | 1923 | 1835 | 1739 | 1654 | 1551 |
| | | | | BHP | 1.03 | 1.00 | 0.97 | 0.93 | 0.89 | 0.86 | 0.82 | 0.78 | 0.74 | 0.69 |
| | | | | Heat Rise (°F) | NA | NA | NA | NA | NA | 35 | 37 | 39 | 41 | 44 |
| | | | | Heat Rise (°C) | NA | NA | NA | NA | NA | 20 | 20 | 22 | 23 | 24 |
| 48115 | 30 – 60 (17 – 33) | Low[3] | Blue | CFM | 1378 | 1344 | 1295 | 1260 | 1216 | 1179 | 1135 | 1087 | 1035 | 995 |
| | | | | BHP | 0.26 | 0.27 | 0.29 | 0.31 | 0.31 | 0.33 | 0.34 | 0.36 | 0.36 | 0.38 |
| | | | | Heat Rise (°F) | NA | NA | NA | NA | NA | NA | NA | NA | NA | NA |
| | | | | Heat Rise (°C) | NA | NA | NA | NA | NA | NA | NA | NA | NA | NA |
| | | Med – Low[2] | Pink | CFM | 1696 | 1671 | 1631 | 1607 | 1574 | 1539 | 1507 | 1463 | 1432 | 1393 |
| | | | | BHP | 0.45 | 0.47 | 0.49 | 0.50 | 0.52 | 0.52 | 0.54 | 0.55 | 0.57 | 0.58 |
| | | | | Heat Rise (°F) | 51 | 52 | 53 | 54 | 55 | 56 | 57 | 59 | 60 | NA |
| | | | | Heat Rise (°C) | 28 | 29 | 29 | 30 | 31 | 31 | 32 | 33 | 34 | NA |
| | | Medium[1] | Red | CFM | 1994 | 1968 | 1943 | 1910 | 1882 | 1835 | 1774 | 1702 | 1614 | 1512 |
| | | | | BHP | 0.72 | 0.73 | 0.75 | 0.76 | 0.78 | 0.78 | 0.76 | 0.73 | 0.70 | 0.66 |
| | | | | Heat Rise (°F) | 43 | 44 | 44 | 45 | 46 | 47 | 49 | 51 | 54 | 57 |
| | | | | Heat Rise (°C) | 24 | 24 | 25 | 25 | 26 | 26 | 27 | 28 | 30 | 32 |
| | | Med – High | Orange | CFM | 2054 | 2013 | 1986 | 1964 | 1919 | 1854 | 1779 | 1695 | 1605 | 1498 |
| | | | | BHP | 0.77 | 0.79 | 0.80 | 0.82 | 0.81 | 0.80 | 0.76 | 0.74 | 0.69 | 0.65 |
| | | | | Heat Rise (°F) | 42 | 43 | 44 | 44 | 45 | 47 | 49 | 51 | 54 | 58 |
| | | | | Heat Rise (°C) | 23 | 24 | 24 | 24 | 25 | 26 | 27 | 28 | 30 | 32 |
| | | High | Black | CFM | 2267 | 2201 | 2133 | 2071 | 1997 | 1923 | 1835 | 1739 | 1654 | 1551 |
| | | | | BHP | 1.03 | 1.00 | 0.97 | 0.93 | 0.89 | 0.86 | 0.82 | 0.78 | 0.74 | 0.69 |
| | | | | Heat Rise (°F) | 38 | 39 | 41 | 42 | 43 | 45 | 47 | 50 | 52 | 56 |
| | | | | Heat Rise (°C) | 21 | 22 | 23 | 23 | 24 | 25 | 26 | 28 | 29 | 31 |

Table 10 - Dry Coil Air Delivery* - Horizontal and Downflow Discharge - Sizes 24-60 208/230VAC - 1 Phase (Cont.)

| Unit Size | Heating Rise Range ºF (ºC) | Motor Speed | Wire Color | | External Static Pressure (IN. W.C.) | | | | | | | | | |
|---|---|---|---|---|---|---|---|---|---|---|---|---|---|---|
| | | | | | 0.1 | 0.2 | 0.3 | 0.4 | 0.5 | 0.6 | 0.7 | 0.8 | 0.9 | 1 |
| 48130 | 35 – 65 (19 – 36) | Low[3] | Blue | CFM | 1378 | 1344 | 1295 | 1260 | 1216 | 1179 | 1135 | 1087 | 1035 | 995 |
| | | | | BHP | 0.26 | 0.27 | 0.29 | 0.31 | 0.31 | 0.33 | 0.34 | 0.36 | 0.36 | 0.38 |
| | | | | Heat Rise (ºF) | NA | NA | NA | NA | NA | NA | NA | NA | NA | NA |
| | | | | Heat Rise (ºC) | NA | NA | NA | NA | NA | NA | NA | NA | NA | NA |
| | | Med – Low[2] | Pink | CFM | 1696 | 1671 | 1631 | 1607 | 1574 | 1539 | 1507 | 1463 | 1432 | 1393 |
| | | | | BHP | 0.45 | 0.47 | 0.49 | 0.50 | 0.52 | 0.52 | 0.54 | 0.55 | 0.57 | 0.58 |
| | | | | Heat Rise (ºF) | 57 | 57 | 59 | 60 | 61 | 62 | 64 | NA | NA | NA |
| | | | | Heat Rise (ºC) | 31 | 32 | 33 | 33 | 34 | 35 | 35 | NA | NA | NA |
| | | Medium | Red | CFM | 1994 | 1968 | 1943 | 1910 | 1882 | 1835 | 1774 | 1702 | 1614 | 1512 |
| | | | | BHP | 0.72 | 0.73 | 0.75 | 0.76 | 0.78 | 0.78 | 0.76 | 0.73 | 0.70 | 0.66 |
| | | | | Heat Rise (ºF) | 48 | 49 | 49 | 50 | 51 | 52 | 54 | 56 | 59 | 63 |
| | | | | Heat Rise (ºC) | 27 | 27 | 27 | 28 | 28 | 29 | 30 | 31 | 33 | 35 |
| | | Med – High[1] | Orange | CFM | 2054 | 2013 | 1986 | 1964 | 1919 | 1854 | 1779 | 1695 | 1605 | 1498 |
| | | | | BHP | 0.77 | 0.79 | 0.80 | 0.82 | 0.81 | 0.80 | 0.76 | 0.74 | 0.69 | 0.65 |
| | | | | Heat Rise (ºF) | 47 | 48 | 48 | 49 | 50 | 52 | 54 | 57 | 60 | 64 |
| | | | | Heat Rise (ºC) | 26 | 26 | 27 | 27 | 28 | 29 | 30 | 31 | 33 | 36 |
| | | High | Black | CFM | 2267 | 2201 | 2133 | 2071 | 1997 | 1923 | 1835 | 1739 | 1654 | 1551 |
| | | | | BHP | 1.03 | 1.00 | 0.97 | 0.93 | 0.89 | 0.86 | 0.82 | 0.78 | 0.74 | 0.69 |
| | | | | Heat Rise (ºF) | 42 | 44 | 45 | 46 | 48 | 50 | 52 | 55 | 58 | 62 |
| | | | | Heat Rise (ºC) | 24 | 24 | 25 | 26 | 27 | 28 | 29 | 31 | 32 | 34 |
| 60090 | 35 – 65 (19 – 36) | Low[3] | Blue | CFM | 1330 | 1277 | 1232 | 1191 | 1147 | 1103 | 1060 | 1004 | 963 | 919 |
| | | | | BHP | 0.26 | 0.27 | 0.29 | 0.30 | 0.31 | 0.32 | 0.33 | 0.34 | 0.36 | 0.37 |
| | | | | Heat Rise (ºF) | 51 | 53 | 55 | 57 | 59 | 61 | 64 | NA | NA | NA |
| | | | | Heat Rise (ºC) | 28 | 29 | 31 | 32 | 33 | 34 | 35 | NA | NA | NA |
| | | Med – Low[1] | Pink | CFM | 1475 | 1436 | 1399 | 1351 | 1317 | 1270 | 1236 | 1188 | 1152 | 1105 |
| | | | | BHP | 0.35 | 0.36 | 0.37 | 0.38 | 0.40 | 0.41 | 0.42 | 0.43 | 0.45 | 0.45 |
| | | | | Heat Rise (ºF) | 46 | 47 | 48 | 50 | 51 | 53 | 55 | 57 | 59 | 61 |
| | | | | Heat Rise (ºC) | 25 | 26 | 27 | 28 | 29 | 30 | 30 | 32 | 33 | 34 |
| | | Medium[2] | Red | CFM | 1736 | 1710 | 1668 | 1630 | 1600 | 1557 | 1522 | 1479 | 1450 | 1406 |
| | | | | BHP | 0.53 | 0.54 | 0.55 | 0.58 | 0.59 | 0.60 | 0.62 | 0.63 | 0.64 | 0.65 |
| | | | | Heat Rise (ºF) | 39 | 40 | 41 | 42 | 42 | 43 | 44 | 46 | 47 | 48 |
| | | | | Heat Rise (ºC) | 22 | 22 | 23 | 23 | 23 | 24 | 25 | 25 | 26 | 27 |
| | | Med – High | Orange | CFM | 1935 | 1909 | 1867 | 1836 | 1808 | 1766 | 1696 | 1619 | 1535 | 1454 |
| | | | | BHP | 0.71 | 0.73 | 0.74 | 0.76 | 0.78 | 0.79 | 0.77 | 0.75 | 0.72 | 0.68 |
| | | | | Heat Rise (ºF) | 35 | 35 | 36 | 37 | 37 | 38 | 40 | 42 | 44 | 47 |
| | | | | Heat Rise (ºC) | 19 | 20 | 20 | 20 | 21 | 21 | 22 | 23 | 24 | 26 |
| | | High | Black | CFM | 2205 | 2150 | 2078 | 2011 | 1941 | 1852 | 1779 | 1672 | 1572 | 1473 |
| | | | | BHP | 1.04 | 1.02 | 0.99 | 0.95 | 0.92 | 0.87 | 0.85 | 0.79 | 0.75 | 0.70 |
| | | | | Heat Rise (ºF) | NA | NA | NA | NA | 35 | 37 | 38 | 40 | 43 | 46 |
| | | | | Heat Rise (ºC) | NA | NA | NA | NA | 19 | 20 | 21 | 22 | 24 | 26 |

**Table 10 - Dry Coil Air Delivery* - Horizontal and Downflow Discharge - Sizes 24-60 208/230VAC - 1 Phase (Cont.)**

| Unit Size | Heating Rise Range °F (°C) | Motor Speed | Wire Color | | External Static Pressure (IN. W.C.) | | | | | | | | | |
|---|---|---|---|---|---|---|---|---|---|---|---|---|---|---|
| | | | | | 0.1 | 0.2 | 0.3 | 0.4 | 0.5 | 0.6 | 0.7 | 0.8 | 0.9 | 1 |
| 60115 | 30 – 60 (17 – 33) | Low[3] | Blue | CFM | 1330 | 1277 | 1232 | 1191 | 1147 | 1103 | 1060 | 1004 | 963 | 919 |
| | | | | BHP | 0.26 | 0.27 | 0.29 | 0.30 | 0.31 | 0.32 | 0.33 | 0.34 | 0.36 | 0.37 |
| | | | | Heat Rise (°F) | NA | NA | NA | NA | NA | NA | NA | NA | NA | NA |
| | | | | Heat Rise (°C) | NA | NA | NA | NA | NA | NA | NA | NA | NA | NA |
| | | Med – Low | Pink | CFM | 1475 | 1436 | 1399 | 1351 | 1317 | 1270 | 1236 | 1188 | 1152 | 1105 |
| | | | | BHP | 0.35 | 0.36 | 0.37 | 0.38 | 0.40 | 0.41 | 0.42 | 0.43 | 0.45 | 0.45 |
| | | | | Heat Rise (°F) | 59 | 60 | NA | NA | NA | NA | NA | NA | NA | NA |
| | | | | Heat Rise (°C) | 33 | 33 | NA | NA | NA | NA | NA | NA | NA | NA |
| | | Medium[2] | Red | CFM | 1736 | 1710 | 1668 | 1630 | 1600 | 1557 | 1522 | 1479 | 1450 | 1406 |
| | | | | BHP | 0.53 | 0.54 | 0.55 | 0.58 | 0.59 | 0.60 | 0.62 | 0.63 | 0.64 | 0.65 |
| | | | | Heat Rise (°F) | 50 | 51 | 52 | 53 | 54 | 56 | 57 | 58 | 60 | NA |
| | | | | Heat Rise (°C) | 28 | 28 | 29 | 29 | 30 | 31 | 32 | 32 | 33 | NA |
| | | Med – High[1] | Orange | CFM | 1935 | 1909 | 1867 | 1836 | 1808 | 1766 | 1696 | 1619 | 1535 | 1454 |
| | | | | BHP | 0.71 | 0.73 | 0.74 | 0.76 | 0.78 | 0.79 | 0.77 | 0.75 | 0.72 | 0.68 |
| | | | | Heat Rise (°F) | 45 | 45 | 46 | 47 | 48 | 49 | 51 | 53 | 56 | 59 |
| | | | | Heat Rise (°C) | 25 | 25 | 26 | 26 | 27 | 27 | 28 | 30 | 31 | 33 |
| | | High | Black | CFM | 2205 | 2150 | 2078 | 2011 | 1941 | 1852 | 1779 | 1672 | 1572 | 1473 |
| | | | | BHP | 1.04 | 1.02 | 0.99 | 0.95 | 0.92 | 0.87 | 0.85 | 0.79 | 0.75 | 0.70 |
| | | | | Heat Rise (°F) | 39 | 40 | 42 | 43 | 45 | 47 | 49 | 52 | 55 | 59 |
| | | | | Heat Rise (°C) | 22 | 22 | 23 | 24 | 25 | 26 | 27 | 29 | 31 | 33 |

**Table 10 - Dry Coil Air Delivery* - Horizontal and Downflow Discharge - Sizes 24-60 208/230VAC - 1 Phase (Cont.)**

| Unit Size | Heating Rise Range ºF (ºC) | Motor Speed | Wire Color | | External Static Pressure (IN. W.C.) | | | | | | | | | |
|---|---|---|---|---|---|---|---|---|---|---|---|---|---|---|
| | | | | | 0.1 | 0.2 | 0.3 | 0.4 | 0.5 | 0.6 | 0.7 | 0.8 | 0.9 | 1 |
| 60130 | 35 – 65 (19 – 36) | Low[3] | Blue | CFM | 1330 | 1277 | 1232 | 1191 | 1147 | 1103 | 1060 | 1004 | 963 | 919 |
| | | | | BHP | 0.26 | 0.27 | 0.29 | 0.30 | 0.31 | 0.32 | 0.33 | 0.34 | 0.36 | 0.37 |
| | | | | Heat Rise (ºF) | NA | NA | NA | NA | NA | NA | NA | NA | NA | NA |
| | | | | Heat Rise (ºC) | NA | NA | NA | NA | NA | NA | NA | NA | NA | NA |
| | | Med – Low | Pink | CFM | 1475 | 1436 | 1399 | 1351 | 1317 | 1270 | 1236 | 1188 | 1152 | 1105 |
| | | | | BHP | 0.35 | 0.36 | 0.37 | 0.38 | 0.40 | 0.41 | 0.42 | 0.43 | 0.45 | 0.45 |
| | | | | Heat Rise (ºF) | 65 | NA | NA | NA | NA | NA | NA | NA | NA | NA |
| | | | | Heat Rise (ºC) | 36 | NA | NA | NA | NA | NA | NA | NA | NA | NA |
| | | Medium[2] | Red | CFM | 1736 | 1710 | 1668 | 1630 | 1600 | 1557 | 1522 | 1479 | 1450 | 1406 |
| | | | | BHP | 0.53 | 0.54 | 0.55 | 0.58 | 0.59 | 0.60 | 0.62 | 0.63 | 0.64 | 0.65 |
| | | | | Heat Rise (ºF) | 55 | 56 | 57 | 59 | 60 | 62 | 63 | 65 | NA | NA |
| | | | | Heat Rise (ºC) | 31 | 31 | 32 | 33 | 33 | 34 | 35 | 36 | NA | NA |
| | | Med – High[1] | Orange | CFM | 1935 | 1909 | 1867 | 1836 | 1808 | 1766 | 1696 | 1619 | 1535 | 1454 |
| | | | | BHP | 0.71 | 0.73 | 0.74 | 0.76 | 0.78 | 0.79 | 0.77 | 0.75 | 0.72 | 0.68 |
| | | | | Heat Rise (ºF) | 50 | 50 | 51 | 52 | 53 | 54 | 57 | 59 | 62 | NA |
| | | | | Heat Rise (ºC) | 28 | 28 | 29 | 29 | 29 | 30 | 31 | 33 | 35 | NA |
| | | High | Black | CFM | 2205 | 2150 | 2078 | 2011 | 1941 | 1852 | 1779 | 1672 | 1572 | 1473 |
| | | | | BHP | 1.04 | 1.02 | 0.99 | 0.95 | 0.92 | 0.87 | 0.85 | 0.79 | 0.75 | 0.70 |
| | | | | Heat Rise (ºF) | 43 | 45 | 46 | 48 | 49 | 52 | 54 | 57 | 61 | 65 |
| | | | | Heat Rise (ºC) | 24 | 25 | 26 | 26 | 27 | 29 | 30 | 32 | 34 | 36 |

*Air delivery values are without air filter and are for dry coil (See Wet Coil Pressure Drop table).
[1] Factory-shipped heating speed
[2] Factory-shipped cooling speed
[3] Factory-shipped continuous fan speed
"NA" = Not allowed for heating speed
**NOTE**: Deduct field-supplied air filter pressure drop and wet coil pressure drop to obtain external static pressure available for ducting.

Shaded areas indicate speed/static combinations that are not permitted for dehumidification speed.

**Table 11 – Dry Coil Air Delivery* - Horizontal Discharge - Sizes 30-60 3 Phase Models Only (Cont.)**

| Unit | Heating Rise Range | Motor Speed | Wire Color | | External Static Pressure (IN. W.C.) | | | | | | | | |
|---|---|---|---|---|---|---|---|---|---|---|---|---|---|
| | | | | | 0.1 | 0.2 | 0.3 | 0.4 | 0.5 | 0.6 | 0.7 | 0.8 | 0.9 |
| 36060 | 25 – 55ºF (14 – 31ºC) | Low | Blue | CFM | 979 | 912 | 859 | 789 | 731 | 654 | 556 | 454 | 374 |
| | | | | Heating Rise (ºF) | 45 | 48 | 51 | NA | NA | NA | NA | NA | NA |
| | | | | Heating Rise (ºC) | 25 | 27 | 28 | NA | NA | NA | NA | NA | NA |
| | | Med–Low[1] | Pink | CFM | 1136 | 1080 | 1015 | 957 | 912 | 861 | 808 | 723 | 633 |
| | | | | Heating Rise (ºF) | 39 | 41 | 43 | 46 | 48 | 51 | 54 | NA | NA |
| | | | | Heating Rise (ºC) | 22 | 23 | 24 | 26 | 27 | 28 | 30 | NA | NA |
| | | Medium[2] | Red | CFM | 1208 | 1144 | 1091 | 1025 | 964 | 902 | 886 | 830 | 746 |
| | | | | Heating Rise (ºF) | 36 | 38 | 40 | 43 | 46 | 49 | 50 | 53 | NA |
| | | | | Heating Rise (ºC) | 20 | 21 | 22 | 24 | 25 | 27 | 28 | 29 | NA |
| | | Med–High | Orange | CFM | 1495 | 1439 | 1376 | 1303 | 1221 | 1207 | 1137 | 1052 | 981 |
| | | | | Heating Rise (ºF) | 29 | 31 | 32 | 34 | 36 | 36 | 39 | 42 | 45 |
| | | | | Heating Rise (ºC) | 16 | 17 | 18 | 19 | 20 | 20 | 22 | 23 | 25 |
| | | High | Black | CFM | 1560 | 1491 | 1416 | 1337 | 1255 | 1233 | 1160 | 1082 | 998 |
| | | | | Heating Rise (ºF) | 28 | 30 | 31 | 33 | 35 | 36 | 38 | 41 | 44 |
| | | | | Heating Rise (ºC) | 16 | 16 | 17 | 18 | 19 | 20 | 21 | 23 | 24 |
| 36090 | 35 – 65ºF (19 – 36ºC) | Low | Blue | CFM | 979 | 912 | 859 | 789 | 731 | 654 | 556 | 454 | 374 |
| | | | | Heating Rise (ºF) | NA | NA | NA | NA | NA | NA | NA | NA | NA |
| | | | | Heating Rise (ºC) | NA | NA | NA | NA | NA | NA | NA | NA | NA |
| | | Med–Low | Pink | CFM | 1136 | 1080 | 1015 | 957 | 912 | 861 | 808 | 723 | 633 |
| | | | | Heating Rise (ºF) | 58 | 61 | 65 | NA | NA | NA | NA | NA | NA |
| | | | | Heating Rise (ºC) | 32 | 34 | 36 | NA | NA | NA | NA | NA | NA |
| | | Medium[2] | Red | CFM | 1208 | 1144 | 1091 | 1025 | 964 | 902 | 886 | 830 | 746 |
| | | | | Heating Rise (ºF) | 54 | 58 | 60 | 64 | NA | NA | NA | NA | NA |
| | | | | Heating Rise (ºC) | 30 | 32 | 34 | 36 | NA | NA | NA | NA | NA |
| | | Med–High[1] | Orange | CFM | 1495 | 1439 | 1376 | 1303 | 1221 | 1207 | 1137 | 1052 | 981 |
| | | | | Heating Rise (ºF) | 44 | 46 | 48 | 51 | 54 | 55 | 58 | 63 | NA |
| | | | | Heating Rise (ºC) | 24 | 25 | 27 | 28 | 30 | 30 | 32 | 35 | NA |
| | | High | Black | CFM | 1560 | 1491 | 1416 | 1337 | 1255 | 1233 | 1160 | 1082 | 998 |
| | | | | Heating Rise (ºF) | 42 | 44 | 46 | 49 | 52 | 53 | 57 | 61 | NA |
| | | | | Heating Rise (ºC) | 23 | 25 | 26 | 27 | 29 | 30 | 32 | 34 | NA |

**Table 11 - Dry Coil Air Delivery* - Horizontal Discharge - Sizes 36-60 3 Phase Models Only (Cont.)**

| Unit | Heating Rise Range | Motor Speed | Wire Color | | External Static Pressure (IN. W.C.) | | | | | | | | |
|---|---|---|---|---|---|---|---|---|---|---|---|---|---|
| | | | | | 0.1 | 0.2 | 0.3 | 0.4 | 0.5 | 0.6 | 0.7 | 0.8 | 0.9 |
| 42060 | 25 – 55ºF (14 – 31ºC) | Low | Blue | CFM | 952 | 882 | 806 | 746 | 671 | 605 | 530 | 551 | 486 |
| | | | | Heating Rise (ºF) | 46 | 49 | 54 | NA | NA | NA | NA | NA | NA |
| | | | | Heating Rise (ºC) | 25 | 27 | 30 | NA | NA | NA | NA | NA | NA |
| | | Med–Low[1] | Pink | CFM | 1002 | 936 | 875 | 821 | 748 | 687 | 613 | 554 | 565 |
| | | | | Heating Rise (ºF) | 43 | 46 | 50 | 53 | NA | NA | NA | NA | NA |
| | | | | Heating Rise (ºC) | 24 | 26 | 28 | 29 | NA | NA | NA | NA | NA |
| | | Medium | Red | CFM | 1255 | 1210 | 1145 | 1074 | 1008 | 940 | 878 | 895 | 838 |
| | | | | Heating Rise (ºF) | 35 | 36 | 38 | 40 | 43 | 46 | 49 | 48 | 52 |
| | | | | Heating Rise (ºC) | 19 | 20 | 21 | 22 | 24 | 26 | 27 | 27 | 29 |
| | | Med–High[2] | Orange | CFM | 1335 | 1267 | 1246 | 1176 | 1109 | 1049 | 988 | 926 | 872 |
| | | | | Heating Rise (ºF) | 32 | 34 | 35 | 37 | 39 | 41 | 44 | 47 | 50 |
| | | | | Heating Rise (ºC) | 18 | 19 | 19 | 20 | 22 | 23 | 24 | 26 | 28 |
| | | High | Black | CFM | 1472 | 1401 | 1326 | 1251 | 1275 | 1198 | 1139 | 1085 | 1023 |
| | | | | Heating Rise (ºF) | 29 | 31 | 33 | 35 | 34 | 36 | 38 | 40 | 42 |
| | | | | Heating Rise (ºC) | 16 | 17 | 18 | 19 | 19 | 20 | 21 | 22 | 24 |
| 42090 | 35 – 65ºF (19 – 36ºC) | Low | Blue | CFM | 952 | 882 | 806 | 746 | 671 | 605 | 530 | 551 | 486 |
| | | | | Heating Rise (ºF) | NA | NA | NA | NA | NA | NA | NA | NA | NA |
| | | | | Heating Rise (ºC) | NA | NA | NA | NA | NA | NA | NA | NA | NA |
| | | Med–Low | Pink | CFM | 1002 | 936 | 875 | 821 | 748 | 687 | 613 | 554 | 565 |
| | | | | Heating Rise (ºF) | NA | NA | NA | NA | NA | NA | NA | NA | NA |
| | | | | Heating Rise (ºC) | NA | NA | NA | NA | NA | NA | NA | NA | NA |
| | | Medium[1] | Red | CFM | 1255 | 1210 | 1145 | 1074 | 1008 | 940 | 878 | 895 | 838 |
| | | | | Heating Rise (ºF) | 53 | 55 | 58 | 62 | NA | NA | NA | NA | NA |
| | | | | Heating Rise (ºC) | 30 | 31 | 32 | 35 | NA | NA | NA | NA | NA |
| | | Med–High[2] | Orange | CFM | 1335 | 1267 | 1246 | 1176 | 1109 | 1049 | 988 | 926 | 872 |
| | | | | Heating Rise (ºF) | 50 | 53 | 54 | 57 | 60 | 64 | NA | NA | NA |
| | | | | Heating Rise (ºC) | 28 | 29 | 30 | 32 | 34 | 35 | NA | NA | NA |
| | | High | Black | CFM | 1472 | 1401 | 1326 | 1251 | 1275 | 1198 | 1139 | 1085 | 1023 |
| | | | | Heating Rise (ºF) | 45 | 48 | 50 | 53 | 52 | 56 | 59 | 62 | 65 |
| | | | | Heating Rise (ºC) | 25 | 27 | 28 | 30 | 29 | 31 | 33 | 34 | 36 |

**Table 11 - Dry Coil Air Delivery* - Horizontal Discharge - Sizes 36-60 3 Phase Models Only (Cont.)**

| Unit | Heating Rise Range | Motor Speed | Wire Color | | External Static Pressure (IN. W.C.) | | | | | | | | |
|---|---|---|---|---|---|---|---|---|---|---|---|---|---|
| | | | | | 0.1 | 0.2 | 0.3 | 0.4 | 0.5 | 0.6 | 0.7 | 0.8 | 0.9 |
| 48090 | 35 – 65ºF (19 – 36ºC) | Low[1] | Blue | CFM | 1402 | 1351 | 1311 | 1263 | 1224 | 1172 | 1136 | 1080 | 1041 |
| | | | | Heating Rise (ºF) | 48 | 50 | 51 | 53 | 55 | 57 | 59 | 62 | 64 |
| | | | | Heating Rise (ºC) | 27 | 28 | 28 | 29 | 30 | 32 | 33 | 34 | 36 |
| | | Med–Low | Pink | CFM | 1457 | 1404 | 1367 | 1318 | 1284 | 1233 | 1197 | 1144 | 1104 |
| | | | | Heating Rise (ºF) | 46 | 48 | 49 | 51 | 52 | 54 | 56 | 58 | 61 |
| | | | | Heating Rise (ºC) | 26 | 26 | 27 | 28 | 29 | 30 | 31 | 32 | 34 |
| | | Medium[2] | Red | CFM | 1736 | 1695 | 1642 | 1601 | 1553 | 1512 | 1465 | 1427 | 1381 |
| | | | | Heating Rise (ºF) | 39 | 39 | 41 | 42 | 43 | 44 | 46 | 47 | 48 |
| | | | | Heating Rise (ºC) | 21 | 22 | 23 | 23 | 24 | 25 | 25 | 26 | 27 |
| | | Med–High | Orange | CFM | 2149 | 2111 | 2062 | 2026 | 1980 | 1945 | 1905 | 1864 | 1793 |
| | | | | Heating Rise (ºF) | NA | NA | NA | NA | NA | NA | 35 | 36 | 37 |
| | | | | Heating Rise (ºC) | NA | NA | NA | NA | NA | NA | 20 | 20 | 21 |
| | | High | Black | CFM | 2344 | 2306 | 2259 | 2203 | 2141 | 2070 | 1991 | 1902 | 1803 |
| | | | | Heating Rise (ºF) | NA | NA | NA | NA | NA | NA | NA | 35 | 37 |
| | | | | Heating Rise (ºC) | NA | NA | NA | NA | NA | NA | NA | 20 | 21 |
| 48115 | 30 – 60ºF (17 – 33ºC) | Low | Blue | CFM | 1402 | 1351 | 1311 | 1263 | 1224 | 1172 | 1136 | 1080 | 1041 |
| | | | | Heating Rise (ºF) | NA | NA | NA | NA | NA | NA | NA | NA | NA |
| | | | | Heating Rise (ºC) | NA | NA | NA | NA | NA | NA | NA | NA | NA |
| | | Med–Low | Pink | CFM | 1457 | 1404 | 1367 | 1318 | 1284 | 1233 | 1197 | 1144 | 1104 |
| | | | | Heating Rise (ºF) | 58 | NA | NA | NA | NA | NA | NA | NA | NA |
| | | | | Heating Rise (ºC) | 32 | NA | NA | NA | NA | NA | NA | NA | NA |
| | | Medium[2] | Red | CFM | 1736 | 1695 | 1642 | 1601 | 1553 | 1512 | 1465 | 1427 | 1381 |
| | | | | Heating Rise (ºF) | 49 | 50 | 52 | 53 | 55 | 56 | 58 | 60 | NA |
| | | | | Heating Rise (ºC) | 27 | 28 | 29 | 30 | 30 | 31 | 32 | 33 | NA |
| | | Med–High[1] | Orange | CFM | 2149 | 2111 | 2062 | 2026 | 1980 | 1945 | 1905 | 1864 | 1793 |
| | | | | Heating Rise (ºF) | 40 | 40 | 41 | 42 | 43 | 44 | 45 | 46 | 48 |
| | | | | Heating Rise (ºC) | 22 | 22 | 23 | 23 | 24 | 24 | 25 | 25 | 26 |
| | | High | Black | CFM | 2344 | 2306 | 2259 | 2203 | 2141 | 2070 | 1991 | 1902 | 1803 |
| | | | | Heating Rise (ºF) | 36 | 37 | 38 | 39 | 40 | 41 | 43 | 45 | 47 |
| | | | | Heating Rise (ºC) | 20 | 21 | 21 | 21 | 22 | 23 | 24 | 25 | 26 |

**Table 11 - Dry Coil Air Delivery* - Horizontal Discharge - Sizes 36-60 3 Phase Models Only (Cont.)**

| Unit | Heating Rise Range | Motor Speed | Wire Color | | External Static Pressure (IN. W.C.) | | | | | | | | |
|---|---|---|---|---|---|---|---|---|---|---|---|---|---|
| | | | | | 0.1 | 0.2 | 0.3 | 0.4 | 0.5 | 0.6 | 0.7 | 0.8 | 0.9 |
| 48130 | 35 – 65ºF (19 – 36ºC) | Low | Blue | CFM | 1402 | 1351 | 1311 | 1263 | 1224 | 1172 | 1136 | 1080 | 1041 |
| | | | | Heating Rise (ºF) | NA | NA | NA | NA | NA | NA | NA | NA | NA |
| | | | | Heating Rise (ºC) | NA | NA | NA | NA | NA | NA | NA | NA | NA |
| | | Med–Low | Pink | CFM | 1457 | 1404 | 1367 | 1318 | 1284 | 1233 | 1197 | 1144 | 1104 |
| | | | | Heating Rise (ºF) | 65 | NA | NA | NA | NA | NA | NA | NA | NA |
| | | | | Heating Rise (ºC) | 36 | NA | NA | NA | NA | NA | NA | NA | NA |
| | | Medium[2] | Red | CFM | 1736 | 1695 | 1642 | 1601 | 1553 | 1512 | 1465 | 1427 | 1381 |
| | | | | Heating Rise (ºF) | 55 | 56 | 58 | 59 | 61 | 63 | 65 | NA | NA |
| | | | | Heating Rise (ºC) | 30 | 31 | 32 | 33 | 34 | 35 | 36 | NA | NA |
| | | Med–High[1] | Orange | CFM | 2149 | 2111 | 2062 | 2026 | 1980 | 1945 | 1905 | 1864 | 1793 |
| | | | | Heating Rise (ºF) | 44 | 45 | 46 | 47 | 48 | 49 | 50 | 51 | 53 |
| | | | | Heating Rise (ºC) | 25 | 25 | 26 | 26 | 27 | 27 | 28 | 28 | 29 |
| | | High | Black | CFM | 2344 | 2306 | 2259 | 2203 | 2141 | 2070 | 1991 | 1902 | 1803 |
| | | | | Heating Rise (ºF) | 41 | 41 | 42 | 43 | 44 | 46 | 48 | 50 | 53 |
| | | | | Heating Rise (ºC) | 23 | 23 | 23 | 24 | 25 | 26 | 27 | 28 | 29 |
| 60090 | 35 – 65ºF (19 – 36ºC) | Low[1] | Blue | CFM | 1445 | 1389 | 1341 | 1281 | 1236 | 1189 | 1139 | 1072 | 1027 |
| | | | | Heating Rise (ºF) | 46 | 48 | 50 | 52 | 54 | 56 | 59 | 62 | 65 |
| | | | | Heating Rise (ºC) | 26 | 27 | 28 | 29 | 30 | 31 | 33 | 35 | 36 |
| | | Med–Low | Pink | CFM | 1678 | 1635 | 1602 | 1558 | 1513 | 1474 | 1438 | 1404 | 1349 |
| | | | | Heating Rise (ºF) | 40 | 41 | 42 | 43 | 44 | 45 | 47 | 48 | 50 |
| | | | | Heating Rise (ºC) | 22 | 23 | 23 | 24 | 25 | 25 | 26 | 26 | 28 |
| | | Medium[2] | Red | CFM | 1962 | 1915 | 1880 | 1843 | 1794 | 1753 | 1711 | 1675 | 1628 |
| | | | | Heating Rise (ºF) | NA | 35 | 36 | 36 | 37 | 38 | 39 | 40 | 41 |
| | | | | Heating Rise (ºC) | NA | 19 | 20 | 20 | 21 | 21 | 22 | 22 | 23 |
| | | Med–High | Orange | CFM | 2131 | 2088 | 2065 | 2013 | 1982 | 1941 | 1888 | 1860 | 1785 |
| | | | | Heating Rise (ºF) | NA | NA | NA | NA | NA | NA | 35 | 36 | 37 |
| | | | | Heating Rise (ºC) | NA | NA | NA | NA | NA | NA | 20 | 20 | 21 |
| | | High | Black | CFM | 2461 | 2409 | 2339 | 2286 | 2192 | 2140 | 2062 | 1968 | 1874 |
| | | | | Heating Rise (ºF) | NA | NA | NA | NA | NA | NA | NA | NA | 36 |
| | | | | Heating Rise (ºC) | NA | NA | NA | NA | NA | NA | NA | NA | 20 |

**Table 11 - Dry Coil Air Delivery* - Horizontal Discharge - Sizes 36-60 3 Phase Models Only (Cont.)**

| Unit | Heating Rise Range | Motor Speed | Wire Color | | External Static Pressure (IN. W.C.) | | | | | | | | |
|---|---|---|---|---|---|---|---|---|---|---|---|---|---|
| | | | | | 0.1 | 0.2 | 0.3 | 0.4 | 0.5 | 0.6 | 0.7 | 0.8 | 0.9 |
| 60115 | 30 – 60ºF (17 – 33ºC) | Low | Blue | CFM | 1445 | 1389 | 1341 | 1281 | 1236 | 1189 | 1139 | 1072 | 1027 |
| | | | | Heating Rise (ºF) | 59 | NA | NA | NA | NA | NA | NA | NA | NA |
| | | | | Heating Rise (ºC) | 33 | NA | NA | NA | NA | NA | NA | NA | NA |
| | | Med–Low | Pink | CFM | 1678 | 1635 | 1602 | 1558 | 1513 | 1474 | 1438 | 1404 | 1349 |
| | | | | Heating Rise (ºF) | 51 | 52 | 53 | 55 | 56 | 58 | 59 | NA | NA |
| | | | | Heating Rise (ºC) | 28 | 29 | 30 | 30 | 31 | 32 | 33 | NA | NA |
| | | Medium[2] | Red | CFM | 1962 | 1915 | 1880 | 1843 | 1794 | 1753 | 1711 | 1675 | 1628 |
| | | | | Heating Rise (ºF) | 43 | 44 | 45 | 46 | 47 | 49 | 50 | 51 | 52 |
| | | | | Heating Rise (ºC) | 24 | 25 | 25 | 26 | 26 | 27 | 28 | 28 | 29 |
| | | Med–High[1] | Orange | CFM | 2131 | 2088 | 2065 | 2013 | 1982 | 1941 | 1888 | 1860 | 1785 |
| | | | | Heating Rise (ºF) | 40 | 41 | 41 | 42 | 43 | 44 | 45 | 46 | 48 |
| | | | | Heating Rise (ºC) | 22 | 23 | 23 | 24 | 24 | 24 | 25 | 25 | 27 |
| | | High | Black | CFM | 2461 | 2409 | 2339 | 2286 | 2192 | 2140 | 2062 | 1968 | 1874 |
| | | | | Heating Rise (ºF) | 35 | 35 | 36 | 37 | 39 | 40 | 41 | 43 | 45 |
| | | | | Heating Rise (ºC) | 19 | 20 | 20 | 21 | 22 | 22 | 23 | 24 | 25 |
| 60130 | 35 – 65ºF (19 – 36ºC) | Low | Blue | CFM | 1445 | 1389 | 1341 | 1281 | 1236 | 1189 | 1139 | 1072 | 1027 |
| | | | | Heating Rise (ºF) | NA | NA | NA | NA | NA | NA | NA | NA | NA |
| | | | | Heating Rise (ºC) | NA | NA | NA | NA | NA | NA | NA | NA | NA |
| | | Med–Low | Pink | CFM | 1678 | 1635 | 1602 | 1558 | 1513 | 1474 | 1438 | 1404 | 1349 |
| | | | | Heating Rise (ºF) | 57 | 58 | 59 | 61 | 63 | 65 | NA | NA | NA |
| | | | | Heating Rise (ºC) | 32 | 32 | 33 | 34 | 35 | 36 | NA | NA | NA |
| | | Medium[2] | Red | CFM | 1962 | 1915 | 1880 | 1843 | 1794 | 1753 | 1711 | 1675 | 1628 |
| | | | | Heating Rise (ºF) | 49 | 50 | 51 | 52 | 53 | 54 | 56 | 57 | 58 |
| | | | | Heating Rise (ºC) | 27 | 28 | 28 | 29 | 29 | 30 | 31 | 32 | 32 |
| | | Med–High[1] | Orange | CFM | 2131 | 2088 | 2065 | 2013 | 1982 | 1941 | 1888 | 1860 | 1785 |
| | | | | Heating Rise (ºF) | 45 | 46 | 46 | 47 | 48 | 49 | 50 | 51 | 53 |
| | | | | Heating Rise (ºC) | 25 | 25 | 26 | 26 | 27 | 27 | 28 | 28 | 30 |
| | | High | Black | CFM | 2461 | 2409 | 2339 | 2286 | 2192 | 2140 | 2062 | 1968 | 1874 |
| | | | | Heating Rise (ºF) | 39 | 40 | 41 | 42 | 43 | 44 | 46 | 48 | 51 |
| | | | | Heating Rise (ºC) | 21 | 22 | 23 | 23 | 24 | 25 | 26 | 27 | 28 |

*Air delivery values are without air filter and are for dry coil (See Wet Coil Pressure Drop table).
[1] Factory-shipped heating speed
[2] Factory-shipped cooling speed
"NA" = Not allowed for heating speed
Note: Deduct field-supplied air filter pressure drop and wet coil pressure drop to obtain external static pressure available for ducting.
Shaded areas indicate speed/static combinations that are not permitted for dehumidification speed.

**Table 12 – Dry Coil Air Delivery - Downflow Discharge - Sizes 36-60 3 Phase Models Only (Cont.)**

| Unit | Heating Rise Range | Motor Speed | Wire Color | | External Static Pressure (IN. W.C.) | | | | | | | | | |
|---|---|---|---|---|---|---|---|---|---|---|---|---|---|---|
| | | | | | 0.1 | 0.2 | 0.3 | 0.4 | 0.5 | 0.6 | 0.7 | 0.8 | 0.9 | 1.0 |
| 36060 | 25 – 55°F (14 – 31°C) | Low | Blue | CFM | 979 | 912 | 859 | 789 | 731 | 654 | 556 | 454 | 374 | 255 |
| | | | | WATTS | 202 | 212 | 217 | 221 | 231 | 236 | 245 | 251 | 259 | 253 |
| | | | | BHP | 0.22 | 0.23 | 0.23 | 0.24 | 0.25 | 0.25 | 0.26 | 0.27 | 0.28 | 0.27 |
| | | | | Heating Rise (°F) | 45 | 48 | 51 | NA | NA | NA | NA | NA | NA | NA |
| | | | | Heating Rise (°C) | 25 | 27 | 28 | NA | NA | NA | NA | NA | NA | NA |
| | | Med–Low[1] | Pink | CFM | 1136 | 1080 | 1015 | 957 | 912 | 861 | 808 | 723 | 633 | 545 |
| | | | | WATTS | 294 | 309 | 310 | 322 | 325 | 333 | 341 | 349 | 354 | 367 |
| | | | | BHP | 0.32 | 0.33 | 0.33 | 0.35 | 0.35 | 0.36 | 0.37 | 0.37 | 0.38 | |
| | | | | Heating Rise (°F) | 39 | 41 | 43 | 46 | 48 | 51 | 54 | NA | NA | NA |
| | | | | Heating Rise (°C) | 22 | 23 | 24 | 26 | 27 | 28 | 30 | NA | NA | NA |
| | | Medium[2] | Red | CFM | 1208 | 1144 | 1091 | 1025 | 964 | 902 | 886 | 830 | 746 | 663 |
| | | | | WATTS | 345 | 350 | 358 | 366 | 373 | 377 | 390 | 396 | 407 | 410 |
| | | | | BHP | 0.37 | 0.38 | 0.38 | 0.39 | 0.40 | 0.40 | 0.42 | 0.42 | 0.44 | 0.44 |
| | | | | Heating Rise (°F) | 36 | 38 | 40 | 43 | 46 | 49 | 50 | 53 | NA | NA |
| | | | | Heating Rise (°C) | 20 | 21 | 22 | 24 | 25 | 27 | 28 | 29 | NA | NA |
| | | Med–High | Orange | CFM | 1495 | 1439 | 1376 | 1303 | 1221 | 1207 | 1137 | 1052 | 981 | 894 |
| | | | | WATTS | 625 | 634 | 635 | 633 | 624 | 613 | 598 | 583 | 573 | 551 |
| | | | | BHP | 0.67 | 0.68 | 0.68 | 0.68 | 0.67 | 0.66 | 0.64 | 0.63 | 0.61 | 0.59 |
| | | | | Heating Rise (°F) | 29 | 31 | 32 | 34 | 36 | 36 | 39 | 42 | 45 | 49 |
| | | | | Heating Rise (°C) | 16 | 17 | 18 | 19 | 20 | 20 | 22 | 23 | 25 | 27 |
| | | High | Black | CFM | 1560 | 1491 | 1416 | 1337 | 1255 | 1233 | 1160 | 1082 | 998 | 911 |
| | | | | WATTS | 708 | 699 | 683 | 674 | 660 | 634 | 624 | 606 | 581 | 566 |
| | | | | BHP | 0.76 | 0.75 | 0.73 | 0.72 | 0.71 | 0.68 | 0.67 | 0.65 | 0.62 | 0.61 |
| | | | | Heating Rise (°F) | 28 | 30 | 31 | 33 | 35 | 36 | 38 | 41 | 44 | 48 |
| | | | | Heating Rise (°C) | 16 | 16 | 17 | 18 | 19 | 20 | 21 | 23 | 24 | 27 |

Table 13 – Dry Coil Air Delivery - Downflow Discharge - Sizes 36-60 3 Phase Models Only (Cont.)

| Unit | Heating Rise Range | Motor Speed | Wire Color | | External Static Pressure (IN. W.C.) | | | | | | | | | |
|---|---|---|---|---|---|---|---|---|---|---|---|---|---|---|
| | | | | | 0.1 | 0.2 | 0.3 | 0.4 | 0.5 | 0.6 | 0.7 | 0.8 | 0.9 | 1.0 |
| 36090 | 35 – 65ºF (19 – 36ºC) | Low | Blue | CFM | 979 | 912 | 859 | 789 | 731 | 654 | 556 | 454 | 374 | 255 |
| | | | | WATTS | 202 | 212 | 217 | 221 | 231 | 236 | 245 | 251 | 259 | 253 |
| | | | | BHP | 0.22 | 0.23 | 0.23 | 0.24 | 0.25 | 0.25 | 0.26 | 0.27 | 0.28 | 0.27 |
| | | | | Heating Rise (ºF) | NA | NA | NA | NA | NA | NA | NA | NA | NA | NA |
| | | | | Heating Rise (ºC) | NA | NA | NA | NA | NA | NA | NA | NA | NA | NA |
| | | Med–Low | Pink | CFM | 1136 | 1080 | 1015 | 957 | 912 | 861 | 808 | 723 | 633 | 545 |
| | | | | WATTS | 294 | 309 | 310 | 322 | 325 | 333 | 341 | 349 | 354 | 367 |
| | | | | BHP | 0.32 | 0.33 | 0.33 | 0.35 | 0.35 | 0.36 | 0.37 | 0.37 | 0.38 | |
| | | | | Heating Rise (ºF) | 58 | 61 | NA | NA | NA | NA | NA | NA | NA | NA |
| | | | | Heating Rise (ºC) | 32 | 34 | NA | NA | NA | NA | NA | NA | NA | NA |
| | | Medium[2] | Red | CFM | 1208 | 1144 | 1091 | 1025 | 964 | 902 | 886 | 830 | 746 | 663 |
| | | | | WATTS | 345 | 350 | 358 | 366 | 373 | 377 | 390 | 396 | 407 | 410 |
| | | | | BHP | 0.37 | 0.38 | 0.38 | 0.39 | 0.40 | 0.40 | 0.42 | 0.42 | 0.44 | 0.44 |
| | | | | Heating Rise (ºF) | 54 | 58 | 60 | 64 | NA | NA | NA | NA | NA | NA |
| | | | | Heating Rise (ºC) | 30 | 32 | 34 | 36 | NA | NA | NA | NA | NA | NA |
| | | Med–High[1] | Orange | CFM | 1495 | 1439 | 1376 | 1303 | 1221 | 1207 | 1137 | 1052 | 981 | 894 |
| | | | | WATTS | 625 | 634 | 635 | 633 | 624 | 613 | 598 | 583 | 573 | 551 |
| | | | | BHP | 0.67 | 0.68 | 0.68 | 0.68 | 0.67 | 0.66 | 0.64 | 0.63 | 0.61 | 0.59 |
| | | | | Heating Rise (ºF) | 44 | 46 | 48 | 51 | 54 | 55 | 58 | 63 | NA | NA |
| | | | | Heating Rise (ºC) | 24 | 25 | 27 | 28 | 30 | 30 | 32 | 35 | NA | NA |
| | | High[1] | Black | CFM | 1560 | 1491 | 1416 | 1337 | 1255 | 1233 | 1160 | 1082 | 998 | 911 |
| | | | | WATTS | 708 | 699 | 683 | 674 | 660 | 634 | 624 | 606 | 581 | 566 |
| | | | | BHP | 0.76 | 0.75 | 0.73 | 0.72 | 0.71 | 0.68 | 0.67 | 0.65 | 0.62 | 0.61 |
| | | | | Heating Rise (ºF) | 42 | 44 | 46 | 49 | 52 | 53 | 57 | 61 | NA | NA |
| | | | | Heating Rise (ºC) | 23 | 25 | 26 | 27 | 29 | 30 | 32 | 34 | NA | NA |

**Table 12 - Dry Coil Air Delivery - Downflow Discharge - Sizes 36-60 3 Phase Models Only (Cont.)**

| Unit | Heating Rise Range | Motor Speed | Wire Color | | External Static Pressure (IN. W.C.) | | | | | | | | | |
|---|---|---|---|---|---|---|---|---|---|---|---|---|---|---|
| | | | | | 0.1 | 0.2 | 0.3 | 0.4 | 0.5 | 0.6 | 0.7 | 0.8 | 0.9 | 1.0 |
| 42060 | 25 – 55ºF (14 – 31ºC) | Low | Blue | CFM | 952 | 882 | 806 | 746 | 671 | 605 | 530 | 551 | 486 | 435 |
| | | | | WATTS | 124 | 134 | 140 | 150 | 156 | 166 | 171 | 182 | 188 | 198 |
| | | | | BHP | 0.13 | 0.14 | 0.15 | 0.16 | 0.17 | 0.18 | 0.18 | 0.20 | 0.20 | 0.21 |
| | | | | Heating Rise (ºF) | 45 | 49 | 54 | NA | NA | NA | NA | NA | NA | NA |
| | | | | Heating Rise (ºC) | 25 | 27 | 30 | NA | NA | NA | NA | NA | NA | NA |
| | | Med–Low[1] | Pink | CFM | 1002 | 936 | 875 | 821 | 748 | 687 | 613 | 554 | 565 | 518 |
| | | | | WATTS | 144 | 155 | 161 | 171 | 176 | 187 | 193 | 203 | 209 | 220 |
| | | | | BHP | 0.15 | 0.17 | 0.17 | 0.18 | 0.19 | 0.20 | 0.21 | 0.22 | 0.22 | 0.24 |
| | | | | Heating Rise (ºF) | 43 | 46 | 49 | 53 | NA | NA | NA | NA | NA | NA |
| | | | | Heating Rise (ºC) | 24 | 26 | 27 | 29 | NA | NA | NA | NA | NA | NA |
| | | Medium | Red | CFM | 1255 | 1210 | 1145 | 1074 | 1008 | 940 | 878 | 895 | 838 | 785 |
| | | | | WATTS | 249 | 272 | 284 | 292 | 305 | 319 | 320 | 329 | 336 | 347 |
| | | | | BHP | 0.27 | 0.29 | 0.30 | 0.31 | 0.33 | 0.34 | 0.34 | 0.35 | 0.36 | 0.37 |
| | | | | Heating Rise (ºF) | 35 | 36 | 38 | 40 | 43 | 46 | 49 | 48 | 52 | 55 |
| | | | | Heating Rise (ºC) | 19 | 20 | 21 | 22 | 24 | 26 | 27 | 27 | 29 | 31 |
| | | Med–High[2] | Orange | CFM | 1335 | 1267 | 1246 | 1176 | 1109 | 1049 | 988 | 926 | 872 | 891 |
| | | | | WATTS | 311 | 323 | 330 | 342 | 356 | 367 | 378 | 385 | 395 | 403 |
| | | | | BHP | 0.33 | 0.35 | 0.35 | 0.37 | 0.38 | 0.39 | 0.41 | 0.41 | 0.42 | 0.43 |
| | | | | Heating Rise (ºF) | 32 | 34 | 35 | 37 | 39 | 41 | 44 | 47 | 50 | 49 |
| | | | | Heating Rise (ºC) | 18 | 19 | 19 | 20 | 22 | 23 | 24 | 26 | 28 | 27 |
| | | High | Black | CFM | 1472 | 1401 | 1326 | 1251 | 1275 | 1198 | 1139 | 1085 | 1023 | 961 |
| | | | | WATTS | 401 | 414 | 426 | 440 | 471 | 462 | 473 | 478 | 486 | 491 |
| | | | | BHP | 0.43 | 0.44 | 0.46 | 0.47 | 0.51 | 0.50 | 0.51 | 0.51 | 0.52 | 0.53 |
| | | | | Heating Rise (ºF) | 29 | 31 | 33 | 35 | 34 | 36 | 38 | 40 | 42 | 45 |
| | | | | Heating Rise (ºC) | 16 | 17 | 18 | 19 | 19 | 20 | 21 | 22 | 24 | 25 |

Table 12 - Dry Coil Air Delivery - Downflow Discharge - Sizes 36-60 3 Phase Models Only (Cont.)

| Unit | Heating Rise Range | Motor Speed | Wire Color | | External Static Pressure (IN. W.C.) | | | | | | | | | |
|---|---|---|---|---|---|---|---|---|---|---|---|---|---|---|
| | | | | | 0.1 | 0.2 | 0.3 | 0.4 | 0.5 | 0.6 | 0.7 | 0.8 | 0.9 | 1.0 |
| 42090 | 35 – 65ºF (19 – 36ºC) | Low | Blue | CFM | 952 | 882 | 806 | 746 | 671 | 605 | 530 | 551 | 486 | 435 |
| | | | | WATTS | 124 | 134 | 140 | 150 | 156 | 166 | 171 | 182 | 188 | 198 |
| | | | | BHP | 0.13 | 0.14 | 0.15 | 0.16 | 0.17 | 0.18 | 0.18 | 0.20 | 0.20 | 0.21 |
| | | | | Heating Rise (ºF) | NA | NA | NA | NA | NA | NA | NA | NA | NA | NA |
| | | | | Heating Rise (ºC) | NA | NA | NA | NA | NA | NA | NA | NA | NA | NA |
| | | Med–Low | Pink | CFM | 1002 | 936 | 875 | 821 | 748 | 687 | 613 | 554 | 565 | 518 |
| | | | | WATTS | 144 | 155 | 161 | 171 | 176 | 187 | 193 | 203 | 209 | 220 |
| | | | | BHP | 0.15 | 0.17 | 0.17 | 0.18 | 0.19 | 0.20 | 0.21 | 0.22 | 0.22 | 0.24 |
| | | | | Heating Rise (ºF) | NA | NA | NA | NA | NA | NA | NA | NA | NA | NA |
| | | | | Heating Rise (ºC) | NA | NA | NA | NA | NA | NA | NA | NA | NA | NA |
| | | Medium[1] | Red | CFM | 1255 | 1210 | 1145 | 1074 | 1008 | 940 | 878 | 895 | 838 | 785 |
| | | | | WATTS | 249 | 272 | 284 | 292 | 305 | 319 | 320 | 329 | 336 | 347 |
| | | | | BHP | 0.27 | 0.29 | 0.30 | 0.31 | 0.33 | 0.34 | 0.34 | 0.35 | 0.36 | 0.37 |
| | | | | Heating Rise (ºF) | 53 | 55 | 58 | 62 | NA | NA | NA | NA | NA | NA |
| | | | | Heating Rise (ºC) | 30 | 31 | 32 | 35 | NA | NA | NA | NA | NA | NA |
| | | Med–High[2] | Orange | CFM | 1335 | 1267 | 1246 | 1176 | 1109 | 1049 | 988 | 926 | 872 | 891 |
| | | | | WATTS | 311 | 323 | 330 | 342 | 356 | 367 | 378 | 385 | 395 | 403 |
| | | | | BHP | 0.33 | 0.35 | 0.35 | 0.37 | 0.38 | 0.39 | 0.41 | 0.41 | 0.42 | 0.43 |
| | | | | Heating Rise (ºF) | 50 | 53 | 54 | 57 | 60 | 64 | NA | NA | NA | NA |
| | | | | Heating Rise (ºC) | 28 | 29 | 30 | 32 | 34 | 35 | NA | NA | NA | NA |
| | | High | Black | CFM | 1472 | 1401 | 1326 | 1251 | 1275 | 1198 | 1139 | 1085 | 1023 | 961 |
| | | | | WATTS | 401 | 414 | 426 | 440 | 471 | 462 | 473 | 478 | 486 | 491 |
| | | | | BHP | 0.43 | 0.44 | 0.46 | 0.47 | 0.51 | 0.50 | 0.51 | 0.51 | 0.52 | 0.53 |
| | | | | Heating Rise (ºF) | 45 | 48 | 50 | 53 | 52 | 56 | 59 | 62 | 65 | NA |
| | | | | Heating Rise (ºC) | 25 | 27 | 28 | 30 | 29 | 31 | 33 | 34 | 36 | NA |

Table 12 - Dry Coil Air Delivery - Downflow Discharge - Sizes 36-60 3 Phase Models Only (Cont.)

| Unit | Heating Rise Range | Motor Speed | Wire Color | | External Static Pressure (IN. W.C.) | | | | | | | | | |
|---|---|---|---|---|---|---|---|---|---|---|---|---|---|---|
| | | | | | 0.1 | 0.2 | 0.3 | 0.4 | 0.5 | 0.6 | 0.7 | 0.8 | 0.9 | 1.0 |
| 48090 | 35 – 65ºF (19 – 36ºC) | Low[1] | Blue | CFM | 1503 | 1457 | 1423 | 1374 | 1330 | 1287 | 1241 | 1199 | 1153 | 1111 |
| | | | | WATTS | 225 | 233 | 246 | 254 | 269 | 282 | 292 | 307 | 314 | 329 |
| | | | | BHP | 0.24 | 0.25 | 0.26 | 0.27 | 0.29 | 0.30 | 0.31 | 0.33 | 0.34 | 0.35 |
| | | | | Heating Rise (ºF) | 45 | 46 | 47 | 49 | 50 | 52 | 54 | 56 | 58 | 60 |
| | | | | Heating Rise (ºC) | 25 | 26 | 26 | 27 | 28 | 29 | 30 | 31 | 32 | 33 |
| | | Med–Low | Pink | CFM | 1556 | 1508 | 1461 | 1432 | 1388 | 1346 | 1302 | 1256 | 1221 | 1168 |
| | | | | WATTS | 244 | 261 | 268 | 281 | 290 | 305 | 319 | 330 | 345 | 353 |
| | | | | BHP | 0.26 | 0.28 | 0.29 | 0.30 | 0.31 | 0.33 | 0.34 | 0.35 | 0.37 | 0.38 |
| | | | | Heating Rise (ºF) | 43 | 44 | 46 | 47 | 48 | 50 | 51 | 53 | 55 | 57 |
| | | | | Heating Rise (ºC) | 24 | 25 | 25 | 26 | 27 | 28 | 29 | 30 | 30 | 32 |
| | | Medium[2] | Red | CFM | 1861 | 1822 | 1786 | 1758 | 1716 | 1688 | 1660 | 1619 | 1583 | 1539 |
| | | | | WATTS | 400 | 417 | 426 | 441 | 452 | 467 | 482 | 492 | 507 | 519 |
| | | | | BHP | 0.43 | 0.45 | 0.46 | 0.47 | 0.48 | 0.50 | 0.52 | 0.53 | 0.54 | 0.56 |
| | | | | Heating Rise (ºF) | 36 | 37 | 37 | 38 | 39 | 40 | 40 | 41 | 42 | 43 |
| | | | | Heating Rise (ºC) | 20 | 20 | 21 | 21 | 22 | 22 | 22 | 23 | 23 | 24 |
| | | Med–High | Orange | CFM | 2319 | 2291 | 2255 | 2230 | 2193 | 2166 | 2118 | 2057 | 1992 | 1887 |
| | | | | WATTS | 758 | 769 | 787 | 799 | 808 | 823 | 822 | 805 | 780 | 737 |
| | | | | BHP | 0.81 | 0.82 | 0.84 | 0.86 | 0.87 | 0.88 | 0.88 | 0.86 | 0.84 | 0.79 |
| | | | | Heating Rise (ºF) | NA | NA | NA | NA | NA | NA | NA | NA | NA | 35 |
| | | | | Heating Rise (ºC) | NA | NA | NA | NA | NA | NA | NA | NA | NA | 20 |
| | | High | Black | CFM | 2532 | 2487 | 2444 | 2391 | 2330 | 2259 | 2179 | 2111 | 2033 | 1949 |
| | | | | WATTS | 1014 | 1022 | 1015 | 994 | 965 | 935 | 898 | 858 | 823 | 786 |
| | | | | BHP | 1.09 | 1.10 | 1.09 | 1.07 | 1.03 | 1.00 | 0.96 | 0.92 | 0.88 | 0.84 |
| | | | | Heating Rise (ºF) | NA | NA | NA | NA | NA | NA | NA | NA | NA | NA |
| | | | | Heating Rise (ºC) | NA | NA | NA | NA | NA | NA | NA | NA | NA | NA |

Table 12 - Dry Coil Air Delivery - Downflow Discharge - Sizes 36-60 3 Phase Models Only (Cont.)

| Unit | Heating Rise Range | Motor Speed | Wire Color | | External Static Pressure (IN. W.C.) | | | | | | | | | |
|---|---|---|---|---|---|---|---|---|---|---|---|---|---|---|
| | | | | | 0.1 | 0.2 | 0.3 | 0.4 | 0.5 | 0.6 | 0.7 | 0.8 | 0.9 | 1.0 |
| 48115 | 30 – 60ºF (17 – 33ºC) | Low | Blue | CFM | 1503 | 1457 | 1423 | 1374 | 1330 | 1287 | 1241 | 1199 | 1153 | 1111 |
| | | | | WATTS | 225 | 233 | 246 | 254 | 269 | 282 | 292 | 307 | 314 | 329 |
| | | | | BHP | 0.24 | 0.25 | 0.26 | 0.27 | 0.29 | 0.30 | 0.31 | 0.33 | 0.34 | 0.35 |
| | | | | Heating Rise (ºF) | 57 | 58 | 60 | NA | NA | NA | NA | NA | NA | NA |
| | | | | Heating Rise (ºC) | 31 | 32 | 33 | NA | NA | NA | NA | NA | NA | NA |
| | | Med–Low | Pink | CFM | 1556 | 1508 | 1461 | 1432 | 1388 | 1346 | 1302 | 1256 | 1221 | 1168 |
| | | | | WATTS | 244 | 261 | 268 | 281 | 290 | 305 | 319 | 330 | 345 | 353 |
| | | | | BHP | 0.26 | 0.28 | 0.29 | 0.30 | 0.31 | 0.33 | 0.34 | 0.35 | 0.37 | 0.38 |
| | | | | Heating Rise (ºF) | 55 | 56 | 58 | 59 | NA | NA | NA | NA | NA | NA |
| | | | | Heating Rise (ºC) | 30 | 31 | 32 | 33 | NA | NA | NA | NA | NA | NA |
| | | Medium[2] | Red | CFM | 1861 | 1822 | 1786 | 1758 | 1716 | 1688 | 1660 | 1619 | 1583 | 1539 |
| | | | | WATTS | 400 | 417 | 426 | 441 | 452 | 467 | 482 | 492 | 507 | 519 |
| | | | | BHP | 0.43 | 0.45 | 0.46 | 0.47 | 0.48 | 0.50 | 0.52 | 0.53 | 0.54 | 0.56 |
| | | | | Heating Rise (ºF) | 46 | 47 | 48 | 48 | 50 | 50 | 51 | 53 | 54 | 55 |
| | | | | Heating Rise (ºC) | 25 | 26 | 26 | 27 | 28 | 28 | 29 | 29 | 30 | 31 |
| | | Med–High[1] | Orange | CFM | 2319 | 2291 | 2255 | 2230 | 2193 | 2166 | 2118 | 2057 | 1992 | 1887 |
| | | | | WATTS | 758 | 769 | 787 | 799 | 808 | 823 | 822 | 805 | 780 | 737 |
| | | | | BHP | 0.81 | 0.82 | 0.84 | 0.86 | 0.87 | 0.88 | 0.88 | 0.86 | 0.84 | 0.79 |
| | | | | Heating Rise (ºF) | 37 | 37 | 38 | 38 | 39 | 39 | 40 | 41 | 43 | 45 |
| | | | | Heating Rise (ºC) | 20 | 21 | 21 | 21 | 22 | 22 | 22 | 23 | 24 | 25 |
| | | High | Black | CFM | 2532 | 2487 | 2444 | 2391 | 2330 | 2259 | 2179 | 2111 | 2033 | 1949 |
| | | | | WATTS | 1014 | 1022 | 1015 | 994 | 965 | 935 | 898 | 858 | 823 | 786 |
| | | | | BHP | 1.09 | 1.10 | 1.09 | 1.07 | 1.03 | 1.00 | 0.96 | 0.92 | 0.88 | 0.84 |
| | | | | Heating Rise (ºF) | 34 | 34 | 35 | 36 | 37 | 38 | 39 | 40 | 42 | 44 |
| | | | | Heating Rise (ºC) | 19 | 19 | 19 | 20 | 20 | 21 | 22 | 22 | 23 | 24 |

**Table 12 - Dry Coil Air Delivery - Downflow Discharge - Sizes 36-60 3 Phase Models Only (Cont.)**

| Unit | Heating Rise Range | Motor Speed | Wire Color | | External Static Pressure (IN. W.C.) | | | | | | | | | |
|---|---|---|---|---|---|---|---|---|---|---|---|---|---|---|
| | | | | | 0.1 | 0.2 | 0.3 | 0.4 | 0.5 | 0.6 | 0.7 | 0.8 | 0.9 | 1.0 |
| 48130 | 35 – 65ºF (19 – 36ºC) | Low | Blue | CFM | 1503 | 1457 | 1423 | 1374 | 1330 | 1287 | 1241 | 1199 | 1153 | 1111 |
| | | | | WATTS | 225 | 233 | 246 | 254 | 269 | 282 | 292 | 307 | 314 | 329 |
| | | | | BHP | 0.24 | 0.25 | 0.26 | 0.27 | 0.29 | 0.30 | 0.31 | 0.33 | 0.34 | 0.35 |
| | | | | Heating Rise (ºF) | 63 | 65 | NA | NA | NA | NA | NA | NA | NA | NA |
| | | | | Heating Rise (ºC) | 35 | 36 | NA | NA | NA | NA | NA | NA | NA | NA |
| | | Med–Low | Pink | CFM | 1556 | 1508 | 1461 | 1432 | 1388 | 1346 | 1302 | 1256 | 1221 | 1168 |
| | | | | WATTS | 244 | 261 | 268 | 281 | 290 | 305 | 319 | 330 | 345 | 353 |
| | | | | BHP | 0.26 | 0.28 | 0.29 | 0.30 | 0.31 | 0.33 | 0.34 | 0.35 | 0.37 | 0.38 |
| | | | | Heating Rise (ºF) | 61 | 63 | 65 | NA | NA | NA | NA | NA | NA | NA |
| | | | | Heating Rise (ºC) | 34 | 35 | 36 | NA | NA | NA | NA | NA | NA | NA |
| | | Medium[2] | Red | CFM | 1861 | 1822 | 1786 | 1758 | 1716 | 1688 | 1660 | 1619 | 1583 | 1539 |
| | | | | WATTS | 400 | 417 | 426 | 441 | 452 | 467 | 482 | 492 | 507 | 519 |
| | | | | BHP | 0.43 | 0.45 | 0.46 | 0.47 | 0.48 | 0.50 | 0.52 | 0.53 | 0.54 | 0.56 |
| | | | | Heating Rise (ºF) | 51 | 52 | 53 | 54 | 55 | 56 | 57 | 59 | 60 | 62 |
| | | | | Heating Rise (ºC) | 28 | 29 | 30 | 30 | 31 | 31 | 32 | 33 | 33 | 34 |
| | | Med–High[1] | Orange | CFM | 2319 | 2291 | 2255 | 2230 | 2193 | 2166 | 2118 | 2057 | 1992 | 1887 |
| | | | | WATTS | 758 | 769 | 787 | 799 | 808 | 823 | 822 | 805 | 780 | 737 |
| | | | | BHP | 0.81 | 0.82 | 0.84 | 0.86 | 0.87 | 0.88 | 0.88 | 0.86 | 0.84 | 0.79 |
| | | | | Heating Rise (ºF) | 41 | 42 | 42 | 43 | 43 | 44 | 45 | 46 | 48 | 50 |
| | | | | Heating Rise (ºC) | 23 | 23 | 23 | 24 | 24 | 24 | 25 | 26 | 27 | 28 |
| | | High | Black | CFM | 2532 | 2487 | 2444 | 2391 | 2330 | 2259 | 2179 | 2111 | 2033 | 1949 |
| | | | | WATTS | 1014 | 1022 | 1015 | 994 | 965 | 935 | 898 | 858 | 823 | 786 |
| | | | | BHP | 1.09 | 1.10 | 1.09 | 1.07 | 1.03 | 1.00 | 0.96 | 0.92 | 0.88 | 0.84 |
| | | | | Heating Rise (ºF) | 38 | 38 | 39 | 40 | 41 | 42 | 44 | 45 | 47 | 49 |
| | | | | Heating Rise (ºC) | 21 | 21 | 22 | 22 | 23 | 23 | 24 | 25 | 26 | 27 |

Table 12 - Dry Coil Air Delivery - Downflow Discharge - Sizes 36-60 3 Phase Models Only (Cont.)

| Unit | Heating Rise Range | Motor Speed | Wire Color | | External Static Pressure (IN. W.C.) | | | | | | | | | |
|---|---|---|---|---|---|---|---|---|---|---|---|---|---|---|
| | | | | | 0.1 | 0.2 | 0.3 | 0.4 | 0.5 | 0.6 | 0.7 | 0.8 | 0.9 | 1.0 |
| 60090 | 35 – 65ºF (19 – 36ºC) | Low[1] | Blue | CFM | 1479 | 1436 | 1387 | 1346 | 1298 | 1253 | 1206 | 1160 | 1114 | 1061 |
| | | | | WATTS | 224 | 239 | 247 | 262 | 270 | 284 | 300 | 307 | 319 | 330 |
| | | | | BHP | 0.24 | 0.26 | 0.26 | 0.28 | 0.29 | 0.30 | 0.32 | 0.33 | 0.34 | 0.35 |
| | | | | Heating Rise (ºF) | 46 | 47 | 49 | 51 | 52 | 54 | 56 | 59 | 61 | 64 |
| | | | | Heating Rise (ºC) | 26 | 26 | 27 | 28 | 29 | 30 | 31 | 33 | 34 | 36 |
| | | Med–Low | Pink | CFM | 1841 | 1796 | 1761 | 1724 | 1690 | 1651 | 1616 | 1578 | 1527 | 1478 |
| | | | | WATTS | 425 | 434 | 453 | 460 | 476 | 485 | 501 | 508 | 525 | 542 |
| | | | | BHP | 0.46 | 0.47 | 0.49 | 0.49 | 0.51 | 0.52 | 0.54 | 0.54 | 0.56 | 0.58 |
| | | | | Heating Rise (ºF) | 36 | 37 | 38 | 39 | 40 | 41 | 41 | 42 | 44 | 45 |
| | | | | Heating Rise (ºC) | 20 | 21 | 21 | 22 | 22 | 23 | 23 | 24 | 24 | 25 |
| | | Medium[2] | Red | CFM | 1944 | 1913 | 1872 | 1838 | 1801 | 1771 | 1731 | 1698 | 1655 | 1613 |
| | | | | WATTS | 486 | 501 | 511 | 529 | 537 | 554 | 565 | 578 | 595 | 603 |
| | | | | BHP | 0.52 | 0.54 | 0.55 | 0.57 | 0.58 | 0.59 | 0.61 | 0.62 | 0.64 | 0.65 |
| | | | | Heating Rise (ºF) | 34 | 35 | 36 | 36 | 37 | 38 | 39 | 39 | 40 | 41 |
| | | | | Heating Rise (ºC) | 19 | 19 | 20 | 20 | 21 | 21 | 21 | 22 | 22 | 23 |
| | | Med–High | Orange | CFM | 2178 | 2148 | 2105 | 2073 | 2036 | 2002 | 1967 | 1919 | 1845 | 1751 |
| | | | | WATTS | 674 | 691 | 703 | 717 | 733 | 743 | 758 | 754 | 734 | 701 |
| | | | | BHP | 0.72 | 0.74 | 0.75 | 0.77 | 0.79 | 0.80 | 0.81 | 0.81 | 0.79 | 0.75 |
| | | | | Heating Rise (ºF) | NA | NA | NA | NA | NA | NA | NA | 35 | 36 | 38 |
| | | | | Heating Rise (ºC) | NA | NA | NA | NA | NA | NA | NA | 19 | 20 | 21 |
| | | High | Black | CFM | 2480 | 2432 | 2375 | 2322 | 2236 | 2161 | 2085 | 2006 | 1917 | 1808 |
| | | | | WATTS | 1029 | 1012 | 995 | 975 | 941 | 908 | 869 | 836 | 796 | 751 |
| | | | | BHP | 1.10 | 1.09 | 1.07 | 1.05 | 1.01 | 0.97 | 0.93 | 0.90 | 0.85 | 0.81 |
| | | | | Heating Rise (ºF) | NA | NA | NA | NA | NA | NA | NA | NA | 35 | 37 |
| | | | | Heating Rise (ºC) | NA | NA | NA | NA | NA | NA | NA | NA | 19 | 21 |

Table 12 - Dry Coil Air Delivery - Downflow Discharge - Sizes 36-60 3 Phase Models Only (Cont.)

| Unit | Heating Rise Range | Motor Speed | Wire Color | | External Static Pressure (IN. W.C.) | | | | | | | | | |
|---|---|---|---|---|---|---|---|---|---|---|---|---|---|---|
| | | | | | 0.1 | 0.2 | 0.3 | 0.4 | 0.5 | 0.6 | 0.7 | 0.8 | 0.9 | 1.0 |
| 60115 | 30 – 60ºF (17 – 33ºC) | Low | Blue | CFM | 1479 | 1436 | 1387 | 1346 | 1298 | 1253 | 1206 | 1160 | 1114 | 1061 |
| | | | | WATTS | 224 | 239 | 247 | 262 | 270 | 284 | 300 | 307 | 319 | 330 |
| | | | | BHP | 0.24 | 0.26 | 0.26 | 0.28 | 0.29 | 0.30 | 0.32 | 0.33 | 0.34 | 0.35 |
| | | | | Heating Rise (ºF) | 58 | 59 | NA | NA | NA | NA | NA | NA | NA | NA |
| | | | | Heating Rise (ºC) | 32 | 33 | NA | NA | NA | NA | NA | NA | NA | NA |
| | | Med–Low | Pink | CFM | 1841 | 1796 | 1761 | 1724 | 1690 | 1651 | 1616 | 1578 | 1527 | 1478 |
| | | | | WATTS | 425 | 434 | 453 | 460 | 476 | 485 | 501 | 508 | 525 | 542 |
| | | | | BHP | 0.46 | 0.47 | 0.49 | 0.49 | 0.51 | 0.52 | 0.54 | 0.54 | 0.56 | 0.58 |
| | | | | Heating Rise (ºF) | 46 | 47 | 48 | 49 | 50 | 52 | 53 | 54 | 56 | 58 |
| | | | | Heating Rise (ºC) | 26 | 26 | 27 | 27 | 28 | 29 | 29 | 30 | 31 | 32 |
| | | Medium[2] | Red | CFM | 1944 | 1913 | 1872 | 1838 | 1801 | 1771 | 1731 | 1698 | 1655 | 1613 |
| | | | | WATTS | 486 | 501 | 511 | 529 | 537 | 554 | 565 | 578 | 595 | 603 |
| | | | | BHP | 0.52 | 0.54 | 0.55 | 0.57 | 0.58 | 0.59 | 0.61 | 0.62 | 0.64 | 0.65 |
| | | | | Heating Rise (ºF) | 44 | 45 | 46 | 46 | 47 | 48 | 49 | 50 | 51 | 53 |
| | | | | Heating Rise (ºC) | 24 | 25 | 25 | 26 | 26 | 27 | 27 | 28 | 29 | 29 |
| | | Med–High[1] | Orange | CFM | 2178 | 2148 | 2105 | 2073 | 2036 | 2002 | 1967 | 1919 | 1845 | 1751 |
| | | | | WATTS | 674 | 691 | 703 | 717 | 733 | 743 | 758 | 754 | 734 | 701 |
| | | | | BHP | 0.72 | 0.74 | 0.75 | 0.77 | 0.79 | 0.80 | 0.81 | 0.81 | 0.79 | 0.75 |
| | | | | Heating Rise (ºF) | 39 | 40 | 40 | 41 | 42 | 43 | 43 | 44 | 46 | 49 |
| | | | | Heating Rise (ºC) | 22 | 22 | 22 | 23 | 23 | 24 | 24 | 25 | 26 | 27 |
| | | High | Black | CFM | 2480 | 2432 | 2375 | 2322 | 2236 | 2161 | 2085 | 2006 | 1917 | 1808 |
| | | | | WATTS | 1029 | 1012 | 995 | 975 | 941 | 908 | 869 | 836 | 796 | 751 |
| | | | | BHP | 1.10 | 1.09 | 1.07 | 1.05 | 1.01 | 0.97 | 0.93 | 0.90 | 0.85 | 0.81 |
| | | | | Heating Rise (ºF) | NA | 35 | 36 | 37 | 38 | 39 | 41 | 42 | 44 | 47 |
| | | | | Heating Rise (ºC) | NA | 19 | 20 | 20 | 21 | 22 | 23 | 24 | 25 | 26 |

**Table 12 - Dry Coil Air Delivery - Downflow Discharge - Sizes 36-60 3 Phase Models Only (Cont.)**

| Unit | Heating Rise Range | Motor Speed | Wire Color | | External Static Pressure (IN. W.C.) | | | | | | | | | |
|---|---|---|---|---|---|---|---|---|---|---|---|---|---|---|
| | | | | | 0.1 | 0.2 | 0.3 | 0.4 | 0.5 | 0.6 | 0.7 | 0.8 | 0.9 | 1.0 |
| 60130 | 35 – 65ºF (19 – 36ºC) | Low | Blue | CFM | 1479 | 1436 | 1387 | 1346 | 1298 | 1253 | 1206 | 1160 | 1114 | 1061 |
| | | | | WATTS | 224 | 239 | 247 | 262 | 270 | 284 | 300 | 307 | 319 | 330 |
| | | | | BHP | 0.24 | 0.26 | 0.26 | 0.28 | 0.29 | 0.30 | 0.32 | 0.33 | 0.34 | 0.35 |
| | | | | Heating Rise (ºF) | 64 | NA | NA | NA | NA | NA | NA | NA | NA | NA |
| | | | | Heating Rise (ºC) | 36 | NA | NA | NA | NA | NA | NA | NA | NA | NA |
| | | Med – Low | Pink | CFM | 1841 | 1796 | 1761 | 1724 | 1690 | 1651 | 1616 | 1578 | 1527 | 1478 |
| | | | | WATTS | 425 | 434 | 453 | 460 | 476 | 485 | 501 | 508 | 525 | 542 |
| | | | | BHP | 0.46 | 0.47 | 0.49 | 0.49 | 0.51 | 0.52 | 0.54 | 0.54 | 0.56 | 0.58 |
| | | | | Heating Rise (ºF) | 52 | 53 | 54 | 55 | 56 | 58 | 59 | 60 | 62 | 64 |
| | | | | Heating Rise (ºC) | 29 | 29 | 30 | 31 | 31 | 32 | 33 | 34 | 35 | 36 |
| | | Medium[2] | Red | CFM | 1944 | 1913 | 1872 | 1838 | 1801 | 1771 | 1731 | 1698 | 1655 | 1613 |
| | | | | WATTS | 486 | 501 | 511 | 529 | 537 | 554 | 565 | 578 | 595 | 603 |
| | | | | BHP | 0.52 | 0.54 | 0.55 | 0.57 | 0.58 | 0.59 | 0.61 | 0.62 | 0.64 | 0.65 |
| | | | | Heating Rise (ºF) | 49 | 50 | 51 | 52 | 53 | 54 | 55 | 56 | 58 | 59 |
| | | | | Heating Rise (ºC) | 27 | 28 | 28 | 29 | 29 | 30 | 31 | 31 | 32 | 33 |
| | | Med – High[1] | Orange | CFM | 2178 | 2148 | 2105 | 2073 | 2036 | 2002 | 1967 | 1919 | 1845 | 1751 |
| | | | | WATTS | 674 | 691 | 703 | 717 | 733 | 743 | 758 | 754 | 734 | 701 |
| | | | | BHP | 0.72 | 0.74 | 0.75 | 0.77 | 0.79 | 0.80 | 0.81 | 0.81 | 0.79 | 0.75 |
| | | | | Heating Rise (ºF) | 44 | 44 | 45 | 46 | 47 | 48 | 48 | 50 | 52 | 54 |
| | | | | Heating Rise (ºC) | 24 | 25 | 25 | 26 | 26 | 26 | 27 | 28 | 29 | 30 |
| | | High | Black | CFM | 2480 | 2432 | 2375 | 2322 | 2236 | 2161 | 2085 | 2006 | 1917 | 1808 |
| | | | | WATTS | 1029 | 1012 | 995 | 975 | 941 | 908 | 869 | 836 | 796 | 751 |
| | | | | BHP | 1.10 | 1.09 | 1.07 | 1.05 | 1.01 | 0.97 | 0.93 | 0.90 | 0.85 | 0.81 |
| | | | | Heating Rise (ºF) | 38 | 39 | 40 | 41 | 43 | 44 | 46 | 47 | 50 | 53 |
| | | | | Heating Rise (ºC) | 21 | 22 | 22 | 23 | 24 | 24 | 25 | 26 | 28 | 29 |

*Air delivery values are without air filter and are for dry coil (See Wet Coil Pressure Drop table).
[1] Factory-shipped heating speed
[2] Factory-shipped cooling speed
"NA" = Not allowed for heating speed
**NOTE**: Deduct field-supplied air filter pressure drop and wet coil pressure drop to obtain external static pressure available for ducting.
Shaded areas indicate speed/static combinations that are not permitted for dehumidification speed.

**Table 14 – Wet Coil Pressure Drop (IN. W.C.)**

| UNIT SIZE | STANDARD CFM (SCFM) | | | | | | | | | | | | | | | | |
|---|---|---|---|---|---|---|---|---|---|---|---|---|---|---|---|---|---|
| | 600 | 700 | 800 | 900 | 1000 | 1100 | 1200 | 1300 | 1400 | 1500 | 1600 | 1700 | 1800 | 1900 | 2000 | 2100 | 2200 |
| 24 | 0.03 | 0.04 | 0.04 | 0.05 | 0.06 | | | | | | | | | | | | |
| 30 | | | | 0.05 | 0.06 | 0.07 | 0.08 | 0.11 | | | | | | | | | |
| 36 | | | | 0.06 | 0.06 | 0.09 | 0.10 | 0.11 | 0.14 | | | | | | | | |
| 42 | | | | | 0.05 | 0.05 | 0.06 | 0.07 | 0.08 | 0.08 | 0.09 | 0.09 | 0.11 | | | | |
| 48 | | | | | | | 0.04 | 0.06 | 0.09 | 0.10 | 0.10 | 0.11 | 0.12 | 0.13 | 0.14 | | |
| 60 | | | | | | | | | | 0.06 | 0.07 | 0.01 | 0.08 | 0.09 | 0.10 | 0.12 | 0.13 |

**Table 15 – Economizer with 1-in. Filter Pressure Drop (IN. W.C.)**

| FILTER SIZE IN. (MM) | COOLING TONS | STANDARD CFM (SCFM) | | | | | | | | | | | | | | | | |
|---|---|---|---|---|---|---|---|---|---|---|---|---|---|---|---|---|---|---|
| | | 600 | 700 | 800 | 900 | 1000 | 1100 | 1200 | 1300 | 1400 | 1500 | 1600 | 1700 | 1800 | 1900 | 2000 | 2100 | 2200 |
| 600-1400 CFM<br>12x20x1+12x20x1<br>(305x508x25+305x508x25) | **2.0,<br>2.5,<br>3.0** | - | - | 0.09 | 0.14 | 0.16 | 0.18 | 0.25 | 0.28 | 0.30 | - | - | - | - | - | - | - | - |
| 1200-1800 CFM<br>16x24x1+14x24x1<br>(406x610x25+356x610x25) | **3.5,<br>4.0** | - | - | - | - | - | - | 0.10 | 0.11 | 0.12 | 0.13 | 0.14 | 0.16 | 0.16 | - | - | - | - |
| 1500-2200 CFM<br>16x24x1+18x24x1<br>(406x610x25+457x610x25) | **5.0** | - | - | - | - | - | - | - | - | - | 0.15 | 0.17 | 0.18 | 0.20 | 0.21 | 0.22 | 0.23 | 0.23 |

**Table 16 – Filter Pressure Drop Table (IN. W.C.)**

| FILTER SIZE IN. (MM) | COOLING TONS | STANDARD CFM (SCFM) | | | | | | | | | | | | | | | | |
|---|---|---|---|---|---|---|---|---|---|---|---|---|---|---|---|---|---|---|
| | | 600 | 700 | 800 | 900 | 1000 | 1100 | 1200 | 1300 | 1400 | 1500 | 1600 | 1700 | 1800 | 1900 | 2000 | 2100 | 2200 |
| 600-1400 CFM<br>12x20x1+12x20x1<br>(305x508x25+305x508x25) | **2.0,<br>2.5,<br>3.0** | 0.03 | 0.05 | 0.06 | 0.08 | 0.10 | 0.11 | 0.13 | 0.14 | 0.16 | - | - | - | - | - | - | - | - |
| 1200-1800 CFM<br>16x24x1+14x24x1<br>(406x610x25+356x610x25) | **3.5,<br>4.0** | - | - | - | - | - | - | 0.07 | 0.08 | 0.09 | 0.09 | 0.10 | 0.11 | 0.12 | - | - | - | - |
| 1500-2200 CFM<br>16x24x1+18x24x1<br>(406x610x25+457x610x25) | **5.0** | - | - | - | - | - | - | - | - | - | 0.04 | 0.06 | 0.08 | 0.10 | 0.11 | 0.13 | 0.14 | 0.15 |

# MAINTENANCE

To ensure continuing high performance and to minimize the possibility of premature equipment failure, periodic maintenance must be performed on this equipment. This unit should be inspected at least once each year by a qualified service person. To troubleshoot unit, refer to Table 17-19, Troubleshooting Chart.

NOTE TO EQUIPMENT OWNER: Consult your local dealer about the availability of a maintenance contract.

**⚠ WARNING**

**PERSONAL INJURY AND UNIT DAMAGE HAZARD**

Failure to follow this warning could result in personal injury or death and unit component damage.

The ability to properly perform maintenance on this equipment requires certain expertise, mechanical skills, tools and equipment. If you do not possess these, do not attempt to perform any maintenance on this equipment, other than those procedures recommended in the Owner's Manual.

**⚠ WARNING**

**ELECTRICAL SHOCK HAZARD**

Failure to follow these warnings could result in personal injury or death:

1. Turn off electrical power to the unit and install lock out tag before performing any maintenance or service on this unit.
2. Use extreme caution when removing panels and parts.
3. Never place anything combustible either on or in contact with the unit.

**⚠ CAUTION**

**UNIT OPERATION HAZARD**

Failure to follow this caution may result in improper operation.

Errors made when reconnecting wires may cause improper and dangerous operation. Label all wires prior to disconnecting when servicing.

**⚠ CAUTION**

**ENVIRONMENTAL HAZARD**

Failure to follow this caution may result in environmental pollution.

Remove and re-cycle all components or materials (i.e. oil, refrigerant, etc) before unit final disposal.

The minimum maintenance requirements for this equipment are as follows:

1. Inspect air filter(s) each month. Clean or replace when necessary.
2. Inspect indoor coil, drain pan, and condensate drain each cooling season for cleanliness. Clean when necessary.
3. Inspect blower motor and wheel for cleanliness at the beginning of each heating and cooling season. Clean when necessary. For first heating and cooling season, inspect blower wheel bi-monthly to determine proper cleaning frequency.
4. Check electrical connections for tightness and controls for proper operation each heating and cooling season. Service when necessary.
5. Ensure electric wires are not in contact with refrigerant tubing or sharp metal edges.
6. Check and inspect heating section before each heating season. Clean and adjust when necessary.
7. Check flue hood and remove any obstructions, if necessary.

## Air Filter

**IMPORTANT**: Never operate the unit without a suitable air filter in the return-air duct system. Always replace the filter with the same dimensional size and type as originally installed. See Table 1 for recommended filter sizes.

Inspect air filter(s) at least once each month and replace (throwaway-type) or clean (cleanable-type) at least twice during each cooling season and twice during the heating season, or whenever the filter becomes clogged with dust and lint.

## Indoor Blower and Motor

**NOTE**: All motors are pre-lubricated. Do not attempt to lubricate these motors.

For longer life, operating economy, and continuing efficiency, clean accumulated dirt and grease from the blower wheel and motor annually.

**⚠ WARNING**

**ELECTRICAL SHOCK HAZARD**

Failure to follow this warning could result in personal injury or death.

Disconnect and tag electrical power to the unit before cleaning the blower motor and wheel.

To clean the blower motor and wheel:

1. Remove and disassemble blower assembly as follows:
   a. Remove blower access panel (see Fig. 20).
   b. Disconnect 5 pin plug and 4 pin plug from indoor blower motor. Remove capacitor if required.
   c. On all units remove blower assembly from unit. Remove screws securing blower to blower partition and slide assembly out. Be careful not to tear insulation in blower compartment.
   d. Ensure proper reassembly by marking blower wheel and motor in relation to blower housing before disassembly.
   e. Loosen setscrew(s) that secures wheel to motor shaft, remove screws that secure motor mount brackets to housing, and slide motor and motor mount out of housing.
2. Remove and clean blower wheel as follows:
   a. Ensure proper reassembly by marking wheel orientation.
   b. Lift wheel from housing. When handling and/or cleaning blower wheel, be sure not to disturb balance weights (clips) on blower wheel vanes.
   c. Remove caked-on dirt from wheel and housing with a brush. Remove lint and/or dirt accumulations from wheel and housing with vacuum cleaner, using soft brush attachment. Remove grease and oil with mild solvent.
   d. Reassemble wheel into housing.
   e. Reassemble motor into housing. Be sure setscrews are tightened on motor shaft flats and not on round part of shaft. Reinstall blower into unit. Reinstall capacitor.

f. Connect 5 pin plug and 4 pin plug to indoor blower motor.
g. Reinstall blower access panel (see Fig. 20).

3. Restore electrical power to unit. Start unit and check for proper blower rotation and motor speeds during heating and cooling cycles.

## Induced Draft (combustion air) Blower Assembly

The induced-draft blower assembly consists of the inducer motor, the blower housing, and the induced-draft blower wheel.

Clean periodically to assure proper airflow and heating efficiency. Inspect blower wheel every fall and periodically during the heating season. For the first heating season, inspect blower wheel bimonthly to determine proper cleaning frequency.

To inspect blower wheel, remove draft hood assembly. Shine a flashlight into opening to inspect wheel. If cleaning is required, remove induced-draft blower assembly as follows:

1. Remove control access panel (See Fig. 20).
2. Remove the 5 screws that attach induced-draft blower assembly to the flue collector box cover.
3. Slide the assembly out of the unit. (See Fig. 22). Clean the blower wheel. If additional cleaning is required, continue with Steps 4 and 5.
4. To remove blower wheel, remove 2 setscrews.
5. To remove inducer motor, remove screws that hold the inducer motor to the blower housing.
6. To reinstall, reverse the procedure outlined above.

## Flue Gas Passageways

To inspect the flue collector box and upper areas of the heat exchanger:

1. Remove the induced draft blower assembly according to directions in the Induced Draft Blower Assembly section.
2. Remove the 11 screws holding the flue collector box cover (See Fig. 19) to the heat exchanger assembly. Inspect the heat exchangers.
3. Clean all surfaces, as required, using a wire brush.

## Limit Switch

Remove blower access panel (see Fig. 20). Limit switch is located on the fan partition.

## Burner Ignition

Unit is equipped with a direct spark ignition 100 percent lockout system. Ignition module (IGC) is located in the control box (See Fig. 19). Module contains a self-diagnostic LED. During servicing, refer to label diagram or Table 7 in these instructions for LED interpretation.

If lockout occurs, unit may be reset by either momentarily interrupting power supply to unit or by turning selector switch to OFF position at the thermostat.

## Main Burners

At the beginning of each heating season, inspect for deterioration or blockage due to corrosion or other causes. Observe the main burner flames and adjust, if necessary.

Removal of Gas Train

To remove the gas train for servicing:

1. Shut off main gas valve.
2. Shut off power to unit and install lockout tag.
3. Remove control access panel (See Fig. 20).
4. Disconnect gas piping at unit gas valve.
5. Remove fan partition mounting bracket (2 screws located on the left side of control compartment on the fan partition panel). Slide bracket forward, bottom first, to remove. (See Fig. 19.)
6. Remove wires connected to gas valve. Mark each wire.
7. Remove the mounting screw that attaches the burner rack to the unit base (See Fig. 19).
8. Partially slide the burner rack out of the unit (see Fig. 19 and 22). Remove ignitor and sensor wires at the burner assembly. Remove wires to rollout switch.
9. Slide the burner rack out of the unit (See Fig. 19 and 22).
10. To reinstall, reverse the procedure outlined above.
11. Check all connections for leaks.

**⚠ WARNING**

**FIRE, EXPLOSION HAZARD**

Failure to follow this warning could result in personal injury, death or property damage.

Do not purge gas supply into the combustion chamber. Do not use a match or other open flame to check for gas leaks. Use a commercially available soap solution made specifically for the detection of leaks to check all connections. A fire or explosion may result causing property damage, personal injury or loss of life.

## Outdoor Coil, Indoor Coil, and Condensate Drain Pan

Inspect the condenser coil, evaporator coil, and condensate drain pan at least once each year.

The coils are easily cleaned when dry; therefore, inspect and clean the coils either before or after each cooling season. Remove all obstructions, including weeds and shrubs, that interfere with the airflow through the condenser coil.

Straighten bent fins with a fin comb. If coated with dirt or lint, clean the coils with a vacuum cleaner, using the soft brush attachment. Be careful not to bend the fins. If coated with oil or grease, clean the coils with a mild detergent and water solution. Rinse coils with clear water, using a garden hose. Be careful not to splash water on motors, insulation, wiring, or air filter(s). For best results, spray condenser coil fins from inside to outside the unit. On units with an outer and inner condenser coil, be sure to clean between the coils. Be sure to flush all dirt and debris from the unit base.

Inspect the drain pan and condensate drain line when inspecting the coils. Clean the drain pan and condensate drain by removing all foreign matter from the pan. Flush the pan and drain trough with clear water. Do not splash water on the insulation, motor, wiring, or air filter(s). If the drain trough is restricted, clear it with a "plumbers snake" or similar probe device.

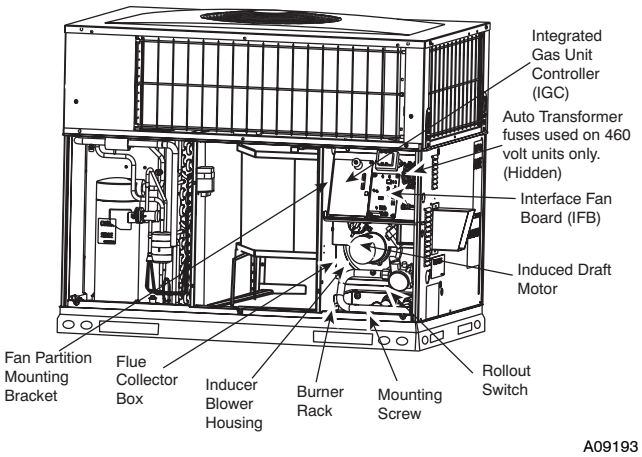


**Fig. 19 - Blower Housing and Flue Collector Box**

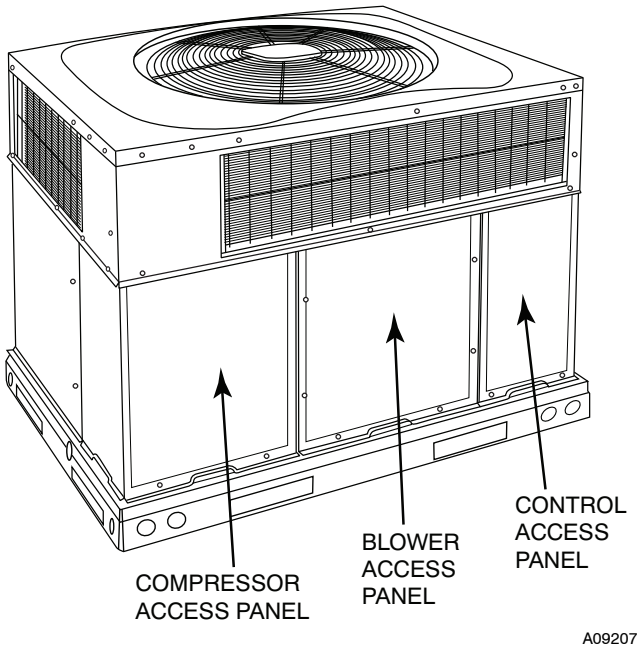


**Fig. 20 - Unit Access Panels**

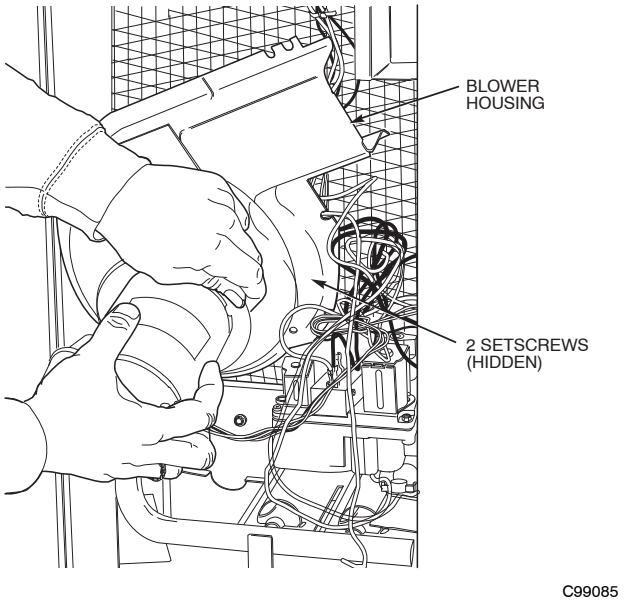


**Fig. 21 - Removal of Motor and Blower Wheel**

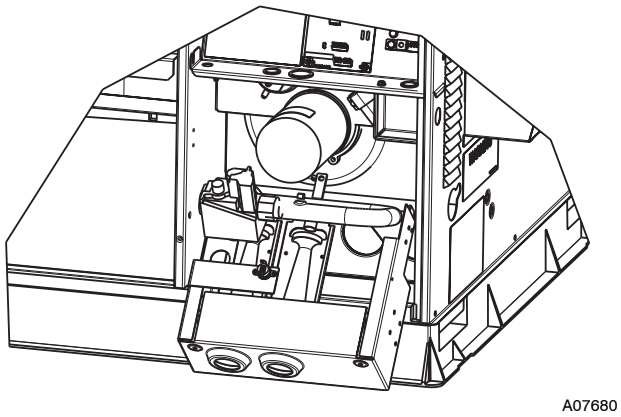


**Fig. 22 - Burner Rack Removed**

## Outdoor Fan

**⚠ CAUTION**

**UNIT OPERATION HAZARD**

Failure to follow this caution may result in damage to unit components.

Keep the condenser fan free from all obstructions to ensure proper cooling operation. Never place articles on top of the unit.

1. Remove 6 screws holding outdoor grille and motor to top cover.
2. Turn motor/grille assembly upside down on top cover to expose fan blade.
3. Inspect the fan blades for cracks or bends.
4. If fan needs to be removed, loosen setscrew and slide fan off motor shaft.
5. When replacing fan blade, position blade as shown in Fig. 23.
6. Ensure that setscrew engages the flat area on the motor shaft when tightening.
7. Replace grille.

## Electrical Controls and Wiring

Inspect and check the electrical controls and wiring annually. Be sure to turn off the electrical power to the unit.

Remove access panels (see Fig. 20) to locate all the electrical controls and wiring. Check all electrical connections for tightness. Tighten all screw connections. If any smoky or burned connections are noticed, disassemble the connection, clean all the parts, re-strip the wire end and reassemble the connection properly and securely.

After inspecting the electrical controls and wiring, replace all the panels. Start the unit, and observe at least one complete cooling cycle to ensure proper operation. If discrepancies are observed in operating cycle, or if a suspected malfunction has occurred, check each electrical component with the proper electrical instrumentation. Refer to the unit wiring label when making these checks.

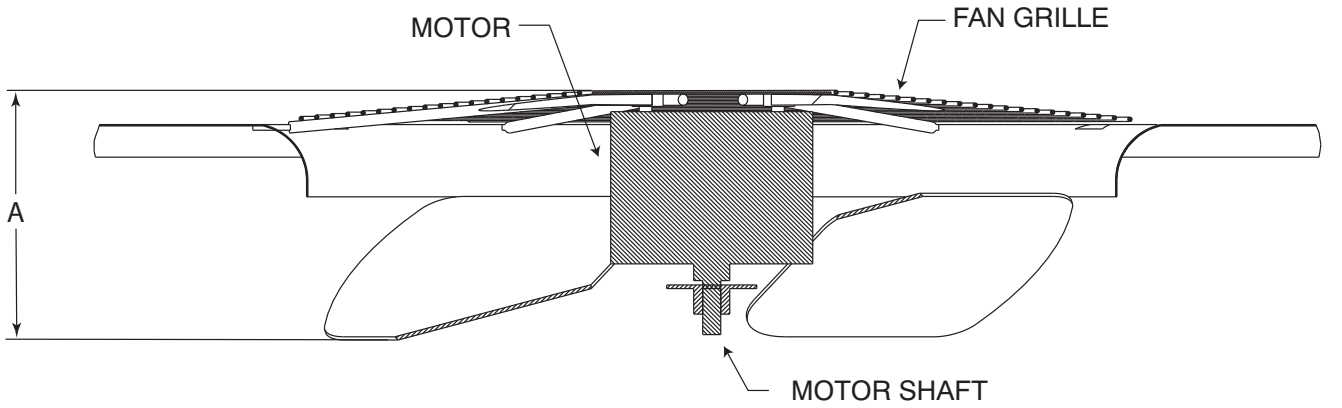


**MAX DISTANCE BETWEEN TOP OF FAN GRILLE AND BOTTOM OF FAN BLADE**

| SIZE | "A" | |
|---|---|---|
| | IN. | MM |
| 24 | 9.0 | 228 |
| 30 | 7.1 | 180 |
| 36 | 8.0 | 203 |
| 42 | 7.6 | 193 |
| 48 | 7.6 | 193 |
| 60 | 7.6 | 193 |

**Fig. 23 - Fan Blade Position**

## Refrigerant Circuit

Annually inspect all refrigerant tubing connections.

**⚠ WARNING**

**EXPLOSION, SAFETY AND ENVIRONMENTAL HAZARD**

Failure to follow this warning could result in personal injury, death or property damage.

System under pressure. Relieve pressure and recover all refrigerant before system repair or final unit disposal. Use all service ports and open all flow-control devices, including solenoid valves.

If low cooling performance is suspected, leak-test all refrigerant tubing using an electronic leak-detector or liquid-soap solution. If a refrigerant leak is detected, refer to the Check for Refrigerant Leaks section.

If no refrigerant leaks are found and low cooling performance is suspected, refer to the Checking and Adjusting Refrigerant Charge section.

## Gas Input

The gas input does not require checking unless improper heating performance is suspected. If a problem exists, refer to the Start-Up section.

## Evaporator Airflow

The heating and/or cooling airflow does not require checking unless improper performance is suspected. If a problem exists, be sure that all supply- and return-air grilles are open and free from obstructions, and that the air filter is clean. When necessary, refer to the Indoor Airflow and Airflow Adjustments section to check the system airflow.

## Puron Items

## Metering Device (Thermostatic Expansion Valve)

This metering device is a hard shutoff, balance port TXV. The TXV maintains a constant superheat at the evaporator exit resulting in higher overall system efficiency.

## Pressure Switches

Pressure switches are protective devices wired into control circuit (low voltage). They shut off compressor if abnormally high or low pressures are present in the refrigeration circuit. These pressure switches are specifically designed to operate with Puron (R-410A) systems. R-22 pressure switches must not be used as replacements for the Puron (R-410A) system.

## Low Pressure Switch (24 size only)

This switch is located on the suction line and protects against low suction pressures caused by such events as loss of charge, low airflow across indoor coil, dirty filters, etc. It opens at 50± psig. If system pressure is above this, switch should be closed. To check switch:

1. Turn off all power to unit.
2. Disconnect leads on switch.
3. Apply ohm meter leads across switch. You should have continuity on a closed switch.

**NOTE**: Because these switches are attached to refrigeration system under pressure, it is not advisable to remove this device for troubleshooting unless you are reasonably certain that a problem exists. If switch must be removed, remove and recover all system charge so that pressure gauges read 0 psig. Never open system without breaking vacuum with dry nitrogen.

## High-Pressure Switch

The high-pressure switch is located in the discharge line and protects against excessive condenser coil pressure. It opens at 650 psig.

High pressure may be caused by a dirty outdoor coil, failed fan motor, or outdoor air recirculation. To check switch:

1. Turn off all power to unit.
2. Disconnect leads on switch.
3. Apply ohm meter leads across switch. You should have continuity on a closed switch.

## Copeland Scroll Compressor (Puron Refrigerant)

The compressor used in this product is specifically designed to operate with Puron (R-410A) refrigerant and cannot be interchanged.

The compressor is an electrical (as well as mechanical) device. Exercise extreme caution when working near compressors. Power should be shut off, if possible, for most troubleshooting techniques. Refrigerants present additional safety hazards.

**⚠ WARNING**

**FIRE/EXPLOSION HAZARD**

Failure to follow this warning could result in personal injury or death and/or property damage.

Wear safety glasses and gloves when handling refrigerants. Keep torches and other ignition sources away from refrigerants and oils.

The scroll compressor pumps refrigerant throughout the system by the interaction of a stationary and an orbiting scroll. The scroll compressor has no dynamic suction or discharge valves, and it is more tolerant of stresses caused by debris, liquid slugging, and flooded starts. The compressor is equipped with a noise reducing shutdown device and an internal pressure relief port. The pressure relief port is a safety device, designed to protect against extreme high pressure. The relief port has an operating range between 550 (26.34 kPa) and 625 psig (29.93 kPa) differential pressure.

**⚠ WARNING**

**EXPLOSION, ENVIRONMENTAL SAFETY HAZARD**

Failure to follow this warning could result in personal injury, death or equipment damage.

This system uses Puron (R-410A) refrigerant which has higher operating pressures than R-22 and other refrigerants. No other refrigerant may be used in this system. Gauge set, hoses, and recovery system must be designed to handle Puron. If you are unsure, consult the equipment manufacturer.

## Refrigerant System

This information covers the refrigerant system including the compressor oil needed, servicing systems on roofs containing synthetic materials, the filter drier and refrigerant charging.

### Compressor Oil

The Copeland scroll compressor uses 3MAF POE oil. If additional oil is needed, use Uniqema RL32-3MAF. If this oil is not available, use Copeland Ultra 32 CC or Mobil Arctic EAL22 CC. This oil is extremely hygroscopic, meaning it absorbs water readily. POE oils can absorb 15 times as much water as other oils designed for HCFC and CFC refrigerants. Take all necessary precautions to avoid exposure of the oil to the atmosphere.

### Reciprocating Compressor

Some sizes may include a traditional reciprocating compressor. These compressors have standard pistons valves, overloads, and internal pressure relief. Refer to Troubleshooting section or Service Manual for more information.

### Rotary Compressor

The 24 size unit uses a single cylinder rotary compressor. This compressor utilizes a rotor which is positioned eccentrically with respect to the shell. Refrigerant gas is ported directly into the compression chamber and discharged into the surrounding area. It is also known as a “high-side” design since high pressure gas surrounds the motor and compression chamber. The majority of the shell will be hot to the touch. The rotary compressor also utilizes an external built-in accumulator to reduce the likelihood of refrigerant liquid from entering the compressor.

## Servicing Systems on Roofs with Synthetic Materials

POE (polyolester) compressor lubricants are known to cause long term damage to some synthetic roofing materials.

Exposure, even if immediately cleaned up, may cause embrittlement (leading to cracking) to occur in one year or more. When performing any service that may risk exposure of compressor oil to the roof, take appropriate precautions to protect roofing. Procedures which risk oil leakage include, but are not limited to, compressor replacement, repairing refrigerant leaks, replacing refrigerant components such as filter drier, pressure switch, metering device, coil, accumulator, or reversing valve.

## Synthetic Roof Precautionary Procedure

1. Cover extended roof working area with an impermeable polyethylene (plastic) drip cloth or tarp. Cover an approximate 10 X 10 ft. (3.1 m X 3.1 m) area.
2. Cover area in front of the unit service panel with a terry cloth shop towel to absorb lubricant spills and prevent run-offs, and protect drop cloth from tears caused by tools or components.
3. Place terry cloth shop towel inside unit immediately under component(s) to be serviced and prevent lubricant run-offs through the louvered openings in the unit base.
4. Perform required service.
5. Remove and dispose of any oil contaminated material per local codes.

## Liquid Line Filter Drier

This filter drier is specifically designed to operate with Puron. Use only factory-authorized components. Filter drier must be replaced whenever the refrigerant system is opened. When removing a filter drier, use a tubing cutter to cut the drier from the system. Do not unsweat a filter drier from the system. Heat from unsweating will release moisture and contaminants from drier into system.

## Puron (R-410A) Refrigerant Charging

Refer to unit information plate and charging chart. Some R-410A refrigerant cylinders contain a dip tube to allow liquid refrigerant to flow from cylinder in upright position. For cylinders equipped with a dip tube, charge Puron units with cylinder in upright position and a commercial metering device in manifold hose. Charge refrigerant into suction-line.

# TROUBLESHOOTING

Use the Troubleshooting Guides (See Tables 17-19) if problems occur with these units.

# START-UP CHECKLIST

Use Start-Up checklist to ensure proper start-up procedures are followed.

**PURON® (R-410A) QUICK REFERENCE GUIDE**

- Puron refrigerant operates at 50-70 percent higher pressures than R-22. Be sure that servicing equipment and replacement components are designed to operate with Puron
- Puron refrigerant cylinders are rose colored.
- Recovery cylinder service pressure rating must be 400 psig, DOT 4BA400 or DOT BW400.
- Puron systems should be charged with liquid refrigerant. Use a commercial type metering device in the manifold hose when charging into suction line with compressor operating
- Manifold sets should be minimum 700 psig high side and 180 psig low side with 550 psig low-side retard.
- Use hoses with minimum 700 psig service pressure rating.
- Leak detectors should be designed to detect HFC refrigerant.
- Puron, as with other HFCs, is only compatible with POE synthetic oils.
- Vacuum pumps will not remove moisture from oil.
- Do not use liquid-line filter driers with rated working pressures less than 600 psig.
- Do not leave Puron suction line filter driers in line longer than 72 hrs.
- Do not install a suction-line filter drier in liquid line.
- POE synthetic oils absorb moisture rapidly. Do not expose oil to atmosphere.
- POE synthetic oils may cause damage to certain plastics and roofing materials.
- Wrap all filter driers and service valves with wet cloth when brazing.
- A factory approved liquid-line filter drier is provided with every unit.
- Do NOT use an R-22 TXV.
- Never open system to atmosphere while it is under a vacuum.
- When system must be opened for service, recover refrigerant, evacuate then break vacuum with dry nitrogen and replace filter driers. Evacuate to 500 microns prior to recharging.
- Do not vent Puron into the atmosphere.
- Observe all **warnings**, **cautions**, and **bold** text.

## Table 17 – Troubleshooting Chart

| SYMPTOM | CAUSE | REMEDY |
|---|---|---|
| **Compressor and condenser fan will not start.** | Power failure | Call power company |
| | Fuse blown or circuit breaker tripped | Replace fuse or reset circuit breaker |
| | Defective contactor, transformer, or high-pressure, loss-of-charge or low-pressure switch | Replace component |
| | Insufficient line voltage | Determine cause and correct |
| | Incorrect or faulty wiring | Check wiring diagram and rewire correctly |
| | Thermostat setting too high | Lower thermostat temperature setting below room temperature |
| **Compressor will not start but condenser fan runs** | Faulty wiring or loose connections in compressor circuit | Check wiring and repair or replace |
| | Compressor motor burned out, seized, or internal overload open | Determine cause<br>Replace compressor |
| | Defective run/start capacitor, overload, start relay | Determine cause and replace |
| | One leg of 3-phase power dead | Replace fuse or reset circuit breaker<br>Determine cause |
| | Low input voltage | Determine cause and correct |
| **Three-phase scroll compressor makes excessive noise, and there may be a low pressure differential.** | Scroll compressor is rotating in the wrong direction | Correct the direction of rotation by reversing the 3-phase power leads to the unit. Shut down unit to allow pressures to equalize. |
| **Compressor cycles (other than normally satisfying thermostat)** | Refrigerant overcharge or undercharge | Recover refrigerant, evacuate system, and recharge to capacities shown on rating plate |
| | Defective compressor | Replace and determine cause |
| | Insufficient line voltage | Determine cause and correct |
| | Blocked outdoor coil | Determine cause and correct |
| | Defective run/start capacitor | Determine cause and replace |
| | Faulty outdoor fan motor or capacitor | Replace |
| | Restriction in refrigerant system | Locate restriction and remove |
| **Compressor operates continuously** | Dirty air filter | Replace filter |
| | Unit undersized for load | Decrease load or increase unit size |
| | Thermostat temperature set too low | Reset thermostat |
| | Low refrigerant charge | Locate leak, repair, and recharge |
| | Air in system | Recover refrigerant, evacuate system, and recharge |
| | Outdoor coil dirty or restricted | Clean coil or remove restriction |
| **Excessive head pressure** | Dirty air filter | Replace filter |
| | Dirty condenser coil | Clean coil |
| | Refrigerant overcharged | Recover excess refrigerant |
| | Air in system | Recover refrigerant, evacuate system, and recharge |
| | Condenser air restricted or air short-cycling | Determine cause and correct |
| **Head pressure too low** | Low refrigerant charge | Check for leaks, repair, and recharge. |
| | Restriction in liquid tube | Remove restriction |
| **Excessive suction pressure** | Refrigerant overcharged | Recover excess refrigerant |
| **Suction pressure too low** | Dirty air filter | Replace filter |
| | Low refrigerant charge | Check for leaks, repair and recharge |
| | Metering device or low side restricted | Remove source of restriction |
| | Insufficient evaporator airflow | Increase air quantity<br>Check filter–replace if necessary |
| | Temperature too low in conditioned area | Reset thermostat |
| | Outdoor ambient below 55°F (13°C) | Install low-ambient kit |
| | Filter drier restricted | Replace filter |

## Table 18 – Troubleshooting Guide–Heating

| SYMPTOM | CAUSE | REMEDY |
|---|---|---|
| **Burners will not ignite** | Water in gas line | Drain. Install drip leg. |
| | No power to furnace | Check power supply fuses, wiring or circuit breaker. |
| | No 24-v power supply to control circuit | Check transformer.<br>NOTE: Some transformers have internal over-current protection that requires a cool-down period to reset. |
| | Mis-wired or loose connections | Check all wiring and wire nut connections |
| | Misaligned spark electrodes | Check flame ignition and sense electrode positioning.<br>Adjust as necessary. |
| | No gas at main burners | 1. Check gas line for air. Purge as necessary. NOTE: After purging gas line of air, wait at least 5 minutes for any gas to dissipate before attempting to light unit.<br>2. Check gas valve. |
| **Inadequate heating** | Dirty air filter | Clean or replace filter as necessary |
| | Gas input to furnace too low | Check gas pressure at manifold match with that on unit nameplate |
| | Unit undersized for application | Replace with proper unit or add additional unit |
| | Restricted airflow | Clean or replace filter. Remove any restriction. |
| | Limit switch cycles main burners | Check rotation of blower, temperature rise of unit. Adjust as necessary. |
| **Poor flame characteristics** | Incomplete combustion results in: Aldehyde odors, carbon monoxide, sooting flame, floating flame | 1. Tighten all screws around burner compartment<br>2. Cracked heat exchanger. Replace.<br>3. Unit over-fired. Reduce input (change orifices or adjust gas line or manifold pressure).<br>4. Check burner alignment.<br>5. Inspect heat exchanger for blockage. Clean as necessary. |

## Table 19 – Troubleshooting Guide–LED Status Codes

| SYMPTOM | CAUSE | REMEDY |
|---|---|---|
| **No Power or Hardware failure (LED OFF)** | Loss of power to control module (IGC)*. | Check 5-amp fuse son IGC*, power to unit, 24-v circuit breaker, and transformer. Units without a 24-v circuit breaker have an internal overload in the 24-v transformer. If the overload trips, allow 10 minutes for automatic reset. |
| **Check fuse, low voltage circuit (LED 1 flash)** | Fuse is blown or missing or short circuit in secondary (24VAC) wiring. | Replace fuse if needed. Verify no short circuit in low voltage (24 VAC wiring). |
| **Limit switch faults (LED 2 flashes)** | High temperature limit switch is open. | Check the operation of the indoor (evaporator) fan motor. Ensure that the supply-air temperature rise is in accordance with the range on the unit nameplate. Clean or replace filters. |
| **Flame sense fault (LED 3 flashes)** | The IGC* sensed flame that should not be present. | Reset unit. If problem persists, replace control board. |
| **4 consecutive limit switch faults (LED 4 flashes)** | Inadequate airflow to unit. | Check the operation of the indoor (evaporator) fan motor and that supply-air temperature rise agrees with range on unit nameplate information. |
| **Ignition lockout fault (LED 5 flashes)** | Unit unsuccessfully attempted ignition for 15 minutes. | Check ignitor and flame sensor electrode spacing, gaps, etc. Ensure that fame sense and ignition wires are properly terminated. Verify that unit is obtaining proper amount of gas. |
| **Pressure Switch fault (LED 6 flashes)** | Open pressure switch. | Verify wiring connections to pressure switch and inducer motor. Verify pressure switch hose is tightly connected to both inducer housing and pressure switch. Verify inducer wheel is properly attached to inducer motor shaft. Verify inducer motor shaft is turning. |
| **Rollout switch fault (LED 7 flashes)** | Rollout switch has opened. | Rollout switch will automatically reset, but IGC* will continue to lockout unit. Check gas valve operation. Ensure that induced-draft blower wheel is properly secured to motor shaft. Inspect heat exchanger. Reset unit at unit disconnect. |
| **Internal control fault (LED 8 flashes)** | Microprocessor has sensed an error in the software or hardware. | If error code is not cleared by resetting unit power, replace the IGC*. |
| **Temporary 1 hr auto reset[1] (LED 9 flashes)** | Electrical interference impeding IGC software | Reset 24-v. to control board or turn thermostat off, then on again. Fault will automatically reset itself in one (1) hour. |

***WARNING** ⚠**:** If the IGC must be replaced, be sure to ground yourself to dissipate any electrical charge that my be present before handling new control board. The IGC is sensitive to static electricity and my be damaged if the necessary precautions are not taken.
**IMPORTANT**: Refer to Table 18–Troubleshooting Guide–Heating for additional troubleshooting analysis.
**LEGEND**
IGC—Integrated Gas Unit Controller
LED—Light–Emitting Diode

# START-UP CHECKLIST

**(Remove and Store in Job Files)**

**I. PRELIMINARY INFORMATION**

MODEL NO.:_____

SERIAL NO.:_____

DATE:_____

TECHNICIAN:_____

**II. PRESTART-UP (Insert check mark in box as each item is completed)**

( ) VERIFY THAT ALL PACKING MATERIALS HAVE BEEN REMOVED FROM UNIT

( ) REMOVE ALL SHIPPING HOLD DOWN BOLTS AND BRACKETS PER INSTALLATION INSTRUCTIONS

( ) CHECK ALL ELECTRICAL CONNECTIONS AND TERMINALS FOR TIGHTNESS

( ) CHECK GAS PIPING FOR LEAKS (WHERE APPLICABLE)

( ) CHECK THAT INDOOR (EVAPORATOR) AIR FILTER IS CLEAN AND IN PLACE

( ) VERIFY THAT UNIT INSTALLATION IS LEVEL

( ) CHECK FAN WHEEL, AND PROPELLER FOR LOCATION IN HOUSING/ORIFICE AND SETSCREW TIGHTNESS

**III. START-UP**

**ELECTRICAL**

SUPPLY VOLTAGE_____

COMPRESSOR AMPS_____

INDOOR (EVAPORATOR) FAN AMPS_____

**TEMPERATURES**

OUTDOOR (CONDENSER) AIR TEMPERATURE_____DB

RETURN-AIR TEMPERATURE_____DB_____WB

COOLING SUPPLY AIR_____DB_____WB

GAS HEAT SUPPLY AIR_____

**PRESSURES**

GAS INLET PRESSURE_____IN. W.C.

GAS MANIFOLD PRESSURE_____IN. W.C.

REFRIGERANT SUCTION_____PSIG, SUCTION LINE TEMP*_____

REFRIGERANT DISCHARGE_____PSIG, LIQUID TEMP†_____

( ) VERIFY REFRIGERANT CHARGE USING CHARGING CHARTS

GAS HEAT TEMPERATURE RISE

TEMPERATURE RISE (See Literature) RANGE_____

MEASURED TEMPERATURE RISE_____

* Measured at suction inlet to compressor

† Measured at liquid line leaving condenser.

©2015 Bryant Heating & Cooling Systems ● 7310 W. Morris St. ● Indianapolis, IN 46231 Edition Date: 12/15 **Catalog No. II577C−11**

**Manufacturer reserves the right to discontinue, or change at any time, specifications or designs without notice and without incurring obligations.** Replaces: NEW