336771−752−CBP
336771−756
336771−757
336771−758
336771−759−CBP
336771−761
336771−763
336771−764

**REPLACEMENT PRIMARY HEAT EXCHANGER KIT FOR USE WITH 35−IN. (889 mm) HIGH EFFICIENCY GAS FURNACES**

# Installation Instructions

**NOTE**: Read the entire instruction manual before starting the installation.

## SAFETY CONSIDERATIONS

Improper installation, adjustment, alteration, service, maintenance, or use can cause explosion, fire, electrical shock, or other conditions which may cause death, personal injury, or property damage. Consult a qualified installer, service agency, or your distributor or branch for information or assistance. The qualified installer or agency must use factory-authorized kits or accessories when modifying this product. Refer to the individual instructions packaged with the kits or accessories when installing.

Follow all safety codes. Wear safety glasses, protective clothing, and work gloves. Have a fire extinguisher available. Read these instructions thoroughly and follow all warnings or cautions included in literature and attached to the unit. Consult local building codes, the current editions of the National Fuel Gas Code (NFGC) NFPA 54/ANSI Z223.1 and the National Electrical Code (NEC) NFPA 70.

In Canada, refer to the current editions of the National Standards of Canada CAN/CSA-B149.1 and .2 Natural Gas and Propane Installation Codes, and Canadian Electrical Code CSA C22.1.

Recognize safety information. This is the safety-alert symbol ⚠. When you see this symbol on the unit and in instructions or manuals, be alert to the potential for personal injury.

Understand the signal words **DANGER**, **WARNING**, and **CAUTION**. These words are used with the safety-alert symbol. **DANGER** identifies the most serious hazards which **will** result in severe personal injury or death. **WARNING** signifies hazards which **could** result in personal injury or death. **CAUTION** is used to identify unsafe practices which **may** result in minor personal injury or product and property damage. **NOTE** is used to highlight suggestions which **will** result in enhanced installation, reliability, or operation.

### ⚠ WARNING

**FIRE, EXPLOSION, ELECTRICAL SHOCK HAZARD**

Failure to follow this warning could result in personal injury, death and/or property damage.

The ability to properly perform maintenance on this equipment requires certain knowledge, mechanical skills, tools, and equipment. If you do not possess these, do not attempt to perform any maintenance on this equipment other than those procedures recommended in the User's Manual.

### ⚠ WARNING

**FIRE, EXPLOSION, ELECTRICAL SHOCK AND CARBON MONOXIDE POISONING HAZARD**

Failure to follow this warning could result in personal injury, death and/or property damage.

Improper installation, adjustment, alteration, service, maintenance, or use can cause carbon monoxide poisoning, explosion, fire, electrical shock, other conditions, which could result in personal injury or death. Consult your distributor or branch for information or assistance. The qualified installer or agency must use only factory-authorized kits or accessories when servicing this product.

### ⚠ WARNING

**ELECTRICAL SHOCK, FIRE OR EXPLOSION HAZARD**

Failure to follow this warning could result in personal injury or death, or property damage.

Before installing, modifying, or servicing system, main electrical disconnect switch must be in the OFF position and install a lockout tag. Check accessories and cooling unit for additional electrical supplies that must be shut off during the furnace servicing. There may be more than one disconnect switch. Lock out and tag switch with a suitable warning label. Verify proper operation after servicing.

### ⚠ CAUTION

**CUT HAZARD**

Failure to follow this caution may result in personal injury.

Sheet metal parts may have sharp edges or burrs. Use care and wear appropriate protective clothing and gloves when handling parts

## INTRODUCTION

This instruction covers installation of the Replacement Primary Heat Exchanger Kit, Part No. 336771-752-CBP, -756, -757, -758, -759-CBP, -761, -763, -764 in 35-in. (889 mm) tall, condensing gas furnaces. See Table 2 for kit usage.

**NOTE**: DO NOT use a releasing agent on parts that will be sealed with RTV.

**NOTE**: DO NOT substitute any other type of RTV sealant for those listed below.

The low adhesion sealant used on the Coupling Box cover is Novaguard RTV 400-900™, P/N PF 680002.

# DESCRIPTION AND USAGE

Use this Primary Heat Exchanger kit to replace a failed primary heat exchanger. This Primary Heat Exchanger Kit contains the following items.

See Table 1 for kit contents and Table 2 for where used.

**Table 1 – Kit Contents**

| Kit No. 336771–752–CBP | |
|---|---|
| **Description** | **Quantity** |
| HX & Panel Assy. | 1 |
| Screw | 51 |
| Gasket | 2 |
| Gasket, Coll Box | 1 |
| Cell Panel Insulation | 1 |
| Screw | 12 |
| Instructions | 1 |
| **Kit No. 336771–756** | |
| **Description** | **Quantity** |
| HX & Panel Assy. | 1 |
| Screw | 56 |
| Gasket | 2 |
| Gasket, Coll Box | 1 |
| Cell Panel Insulation | 1 |
| Screw | 12 |
| Instructions | 1 |
| **Kit No. 336771–757** | |
| **Description** | **Quantity** |
| HX & Panel Assy. | 1 |
| Screw | 59 |
| Gasket | 2 |
| Gasket, Coll Box | 1 |
| Cell Panel Insulation | 1 |
| Screw | 12 |
| Instructions | 1 |
| **Kit No. 336771–758** | |
| **Description** | **Quantity** |
| HX & Panel Assy. | 1 |
| Screw | 43 |
| Gasket | 2 |
| Gasket, Coll Box | 1 |
| Cell Panel Insulation | 1 |
| Screw | 12 |
| Instructions | 1 |
| **Kit No. 336771–759–CBP** | |
| **Description** | **Quantity** |
| HX & Panel Assy. | 1 |
| Screw | 61 |
| Gasket | 2 |
| Gasket, Coll Box | 1 |
| Cell Panel Insulation | 1 |
| Screw | 12 |
| Instructions | 1 |
| **Kit No. 336771–761** | |
| **Description** | **Quantity** |
| HX & Panel Assy. | 1 |
| Screw | 51 |
| Gasket | 2 |
| Gasket, Coll Box | 1 |
| Cell Panel Insulation | 1 |
| Screw | 12 |
| Instructions | 1 |
| **Kit No. 336771–763** | |
| **Description** | **Quantity** |
| HX & Panel Assy. | 1 |
| Screw | 51 |
| Gasket | 2 |
| Gasket, Coll Box | 1 |
| Cell Panel Insulation | 1 |
| Screw | 12 |
| Gasket, Coll Box | 1 |
| Cell Panel Insulation | 1 |
| Gasket, Coll Box | 1 |
| Cell Panel Insulation | 1 |
| Instructions | 1 |
| **Kit No. 336771–764** | |
| **Description** | **Quantity** |
| HX & Panel Assy. | 1 |
| Screw | 53 |
| Gasket | 2 |
| Gasket, Coll Box | 1 |
| Cell Panel Insulation | 1 |
| Screw | 12 |
| Gasket, Coll Box | 1 |
| Cell Panel Insulation | 1 |
| Instructions | 1 |

**Table 2 – Where Used**

| Input | Casing Width | Kit Number |
|---|---|---|
| 26,000 | 14-3/16 (360) | 336771-758 |
| 40,000 | 14-3/16 (360) | |
| | 17-1/2 (445) | |
| 60,000 | 14-3/16 (360) | 336771-752-CBP |
| | 17-1/2 (445) | 336771-763 |
| | 21 (533) | 336771-761 |
| 80,000 | 17-1/2 (445) | 336771-764 |
| | 21 (533) | |
| 100,000 | 21 (533) | 336771-756 |
| 120,000 | 24-1/2 (662) | 336771-757 |
| 140,000 | 24-1/2 (662) | 336771-759–CBP |

# INSTALLATION

## Unit Shut Down

1. Set room thermostat to lowest setting or “OFF.”
2. Disconnect power at external disconnect, fuse or circuit breaker.
3. Turn off gas at external shut-off or gas meter.
4. Remove outer doors and set aside.
5. Turn electric switch on gas valve to OFF.

## Vent Pipe Removal

**NOTE**: It will be necessary to remove the vent pipe from the furnace in order to remove the heat exchanger.

1. Support the vent pipe as close to the furnace as possible to prevent damage to the vent system.
2. Cut vent pipe with a hacksaw and move the remaining vent pipe out of the way. Secure the vent pipe if necessary.
3. Loosen both clamps at the vent pipe support attached to furnace casing.
4. Loosen clamp for the vent pipe at vent elbow on the inducer assembly. See Fig. 1.
5. Remove remaining vent pipe through the furnace casing and set aside.

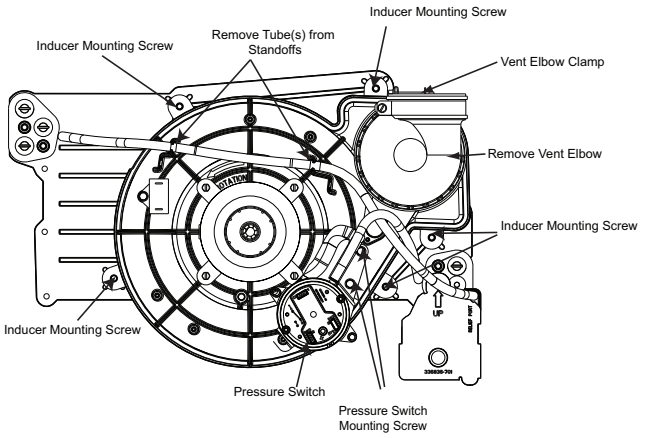


**Fig. 1 - Loosen Vent Pipe Clamp**

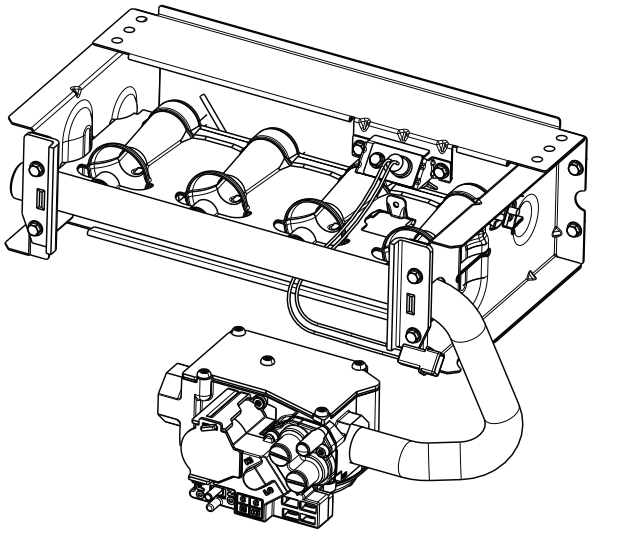


**Fig. 2 - Burner Assembly / Manifold Assembly / Gas Valve**

## Manifold Removal / Burner Box Removal

**NOTE**: Use a back-up wrench on the gas valve to prevent the valve from rotating on the manifold or damaging the mounting to the burner box. See Fig. 2.

1. Disconnect the gas pipe from gas valve and remove pipe from the furnace casing.
2. Disconnect the connector harness from gas valve (Modulating only) or remove individual wires from terminals on gas valve (All other models).
3. Disconnect the wires from gas valve, flame sensor and hot surface igniter.
4. Remove wires from both roll-out switches.

**⚠ CAUTION**

**UNIT OPERATION HAZARD**

Failure to follow this caution may result in improper furnace operation or failure of furnace.

Label all wires prior to disconnection when servicing controls. Wiring errors can cause improper and dangerous operation.

5. Support the manifold and remove the 4 screws that secure the manifold assembly to the burner box and set aside. Note the location of the green and yellow ground wire for reassembly later.
6. Support the burner box assembly and remove the screws that attach the burner box to the heat exchanger cell panel.
7. Set the burner box assembly aside.

## Pressure Switch Removal

**NOTE**: There are two types of pressure switches. The modulating pressure switch assembly has three pressure switches. Two are side-by-side with the third switch mounted to the back of one of the switches.

All other furnaces have two pressure switches mounted back-to-back.

The tube for the front pressure switch connects the switch to the port on the collector box. For PSC inducers only, the tube for the switch mounted on the back connects the switch to the port on the inducer assembly.

1. Remove the front pressure switch tube from the port on the collector box. See Fig. 1.
2. Disconnect the pressure switch harness (modulating only) from the main wiring harness or remove the individual wires from the front pressure switch (non-modulating). Not the location of the wires for reassembly.
3. Remove the screws that attach the pressure switch assembly to the inducer.
4. Remove the back pressure switch tube that connects to the inducer assembly.
5. Remove the wires from the back pressure switch. Note the location of the wires for reassembly. (Non-modulating).
6. If the relief tube for the condensate trap is routed across the inducer assembly, remove the tube from the port on the collector box and from the stand-offs on the inducer and move the tube aside.
7. Set the pressure switches aside.

## Inducer Assembly Removal

1. Remove the wires that connect the main wiring harness to the inducer motor harness.
2. Remove the screws from the tabs on inducer assembly that secures the inducer to the collector box. Note there is one mounting tab directly under the vent elbow.
3. Remove the inducer assembly and set aside.
4. To avoid double gasketing and leakage, check to make sure the drain gaskets for the inducer and the inducer outlet gasket are not still attached to the collector box.
5. Remove any remaining gaskets from the collector box and discard.

## Condensate Drain and Trap Removal

**NOTE**: If the condensate trap is removed, a new gasket between the trap and collector box is required. Verify a condensate trap gasket is included in the service kit or obtain one from your local distributor. See Fig. 1 and Fig. 7 .

1. Disconnect external drain from condensate drain elbow or drain extension pipe inside the furnace and set aside.
2. Disconnect the condensate trap relief hose from collector box port and the molded retainer clips on the inducer housing.

**NOTE**: If condensate trap has a heat pad attached to the trap, trace the wires for the pad back to the connection point and disconnect the wires for the heat pad.

3. Remove the screw that secures the condensate trap to the collector box, remove the trap and set aside.
4. Remove the trap gasket from the collector box if it did not come off when the trap was removed.
5. Discard the old trap gasket.
6. Rinse condensate trap in warm water until trap is clean.

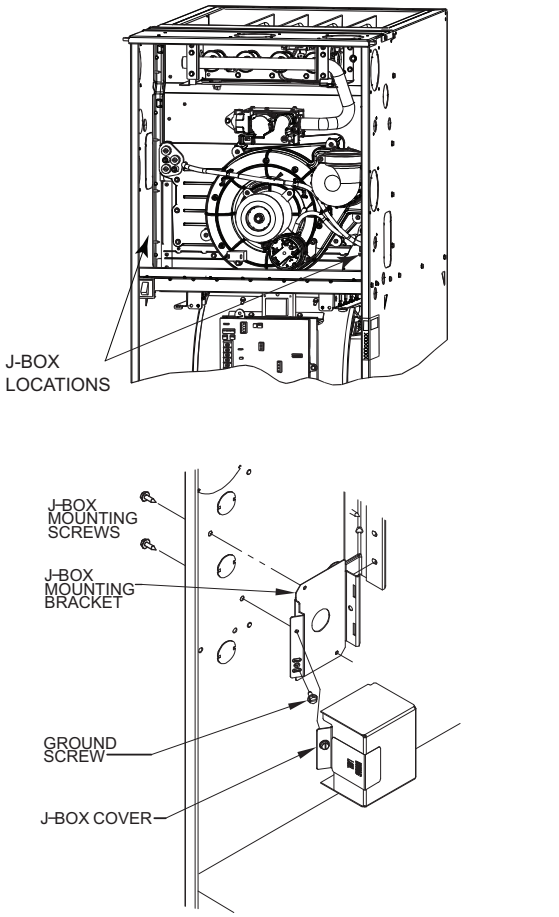


**Fig. 3 - J-Box Removal / Installation**

7. Clean relief port on Condensate Trap with a thin wire or paper clip, rinse with warm water and set aside.
8. Flush condensate lines with warm water.
9. Shake trap dry.

## Remove J-box and Main Harness

1. Remove the screw that secures the J-box cover to the J-box bracket. See Fig. 3.
2. Disconnect the field wiring from the factory wiring and remove the ground wire from the green ground screw on the J-box bracket.
3. Remove factory wiring from the J-box.
4. Disconnect the factory wires from the main limit switch.
5. Remove the screw that secures the door switch to the blower shelf and the blower shelf door bracket. Remove the screws from the blower shelf door bracket, and set the bracket aside.
6. Remove main harness from the slot in the blower shelf.

## Collector Box Removal

1. Remove the screws that secure the collector box to the heat exchanger cell panel and set aside. See Fig 4.
2. Remove collector box gasket and discard.
3. Flush out the collector box with warm water including the tube ports. Clean tube ports on collector box with a thin wire or paper clip, rinse with warm water and set aside.

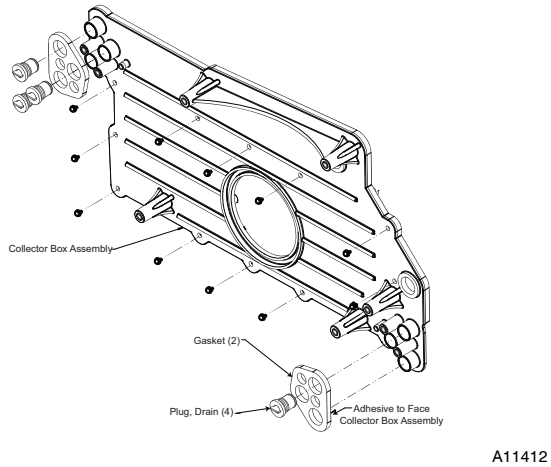


**Fig. 4 - Collector Box Removal / Installation**

## Heat Exchanger Assembly Removal

**⚠ CAUTION**

**CUT HAZARD**

Failure to follow this caution may result in personal injury.

Sheet metal parts may have sharp edges or burrs. Use care and wear appropriate protective clothing and gloves when handling parts and servicing furnaces.

1. Remove the screws that attach the filler plate to the bottom edge of the condensing heat exchanger assembly and casing.
2. Remove screws that secure the heat exchanger assembly to the heat exchanger mounting brackets.
3. Pull assembly out of casing until the back edge of the heat exchanger assembly is resting on the front edge of the blower shelf.
4. Lift the heat exchanger assembly out of the casing and set aside.

## Remove Coupling Box

1. Remove the screws that secure the finger baffle from the Coupling Box Cover. See Fig. 5.
2. Remove the screws that secure the Coupling Box Cover to the rear of the Heat Exchanger Assembly.
3. Starting at the upper beveled edge of the coupling box, use a putty knife or gasket scraper to get between the coupling box cover and the Primary Cell Outlet panel to break the silicone seal between the parts.
4. Pry upwards with the putty knife as you move around the Coupling Box cover.
5. Once the Coupling Box cover is sufficiently loosened, remove the coupling box cover from the rear of the Heat Exchanger Assembly. See Fig. 6.

## Separate Primary and Condensing Heat Exchangers

1. Remove the screws that attach the condensing heat exchanger assembly to the primary cell outlet panel and remove the screws that attach the condensing heat exchanger outlet panel to the primary inlet panel.
2. Gently use a putty knife or gasket scraper to get between the primary cell inlet panel and condensing heat exchanger if it is needed to break the seal between the parts.
3. Repeat the procedure at the primary cell outlet panel and containment plate attached to the inlet of the secondary heat exchanger.

## Remove Primary and Condensing Heat Exchanger

**NOTE**: The primary heat exchanger assembly is factory-assembled at primary cell attachment plate and the primary rear cell outlet panel. The individual heat exchanger cells cannot be removed in the field and are replaced as one assembly.

1. Remove screws that attach the sidewall baffles to the heat exchanger cell panel. See Fig. 8.

**NOTE**: The front edge of the sidewall baffle has a slot that engages a tab on the primary cell panel. See Fig. 8.

2. Avoid damaging the cell panel insulation by pulling the sidewall baffle outward from the rear of coupling box, then pull the baffle backward to slide the baffle off of the locator tab on the cell panel.
3. Repeat the procedure for the opposite side baffle.
4. Remove the screws around each burner inlet opening that attaches the heat exchanger cell panel to the primary inlet plate of the primary heat exchanger assembly.
5. If not removed already, remove the screws that attach the primary cell panel to the front of condensing heat exchanger section.
6. Separate the Primary Heat Exchanger from the Condensing Heat Exchanger.
7. Remove the primary cell panel from the primary cell inlet plate and set aside.

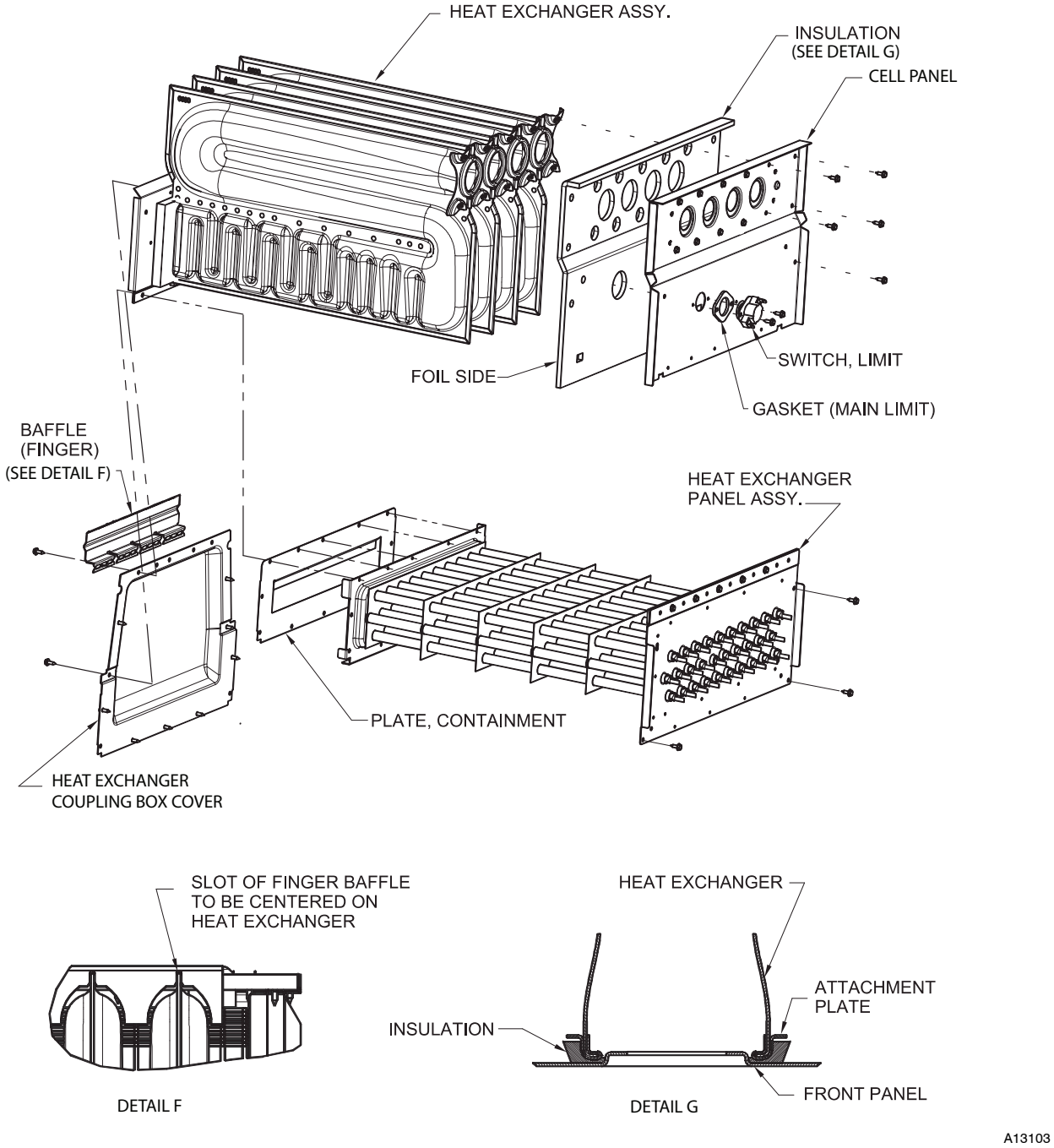


**Fig. 5 - Heat Exchanger Removal / Installation**

# BEGIN RE-ASSEMBLY

## Install Heat Exchanger Primary Cell Panel

1. Align the primary cell panel with the primary inlet plate of heat exchanger assembly.
2. Avoid damaging the cell panel insulation during alignment.
3. Insert the screws around each burner inlet opening that attaches the heat exchanger cell panel to the primary inlet plate of the primary heat exchanger assembly.

## Attaching Primary and Condensing Heat Exchangers

1. Align the bottom edge primary cell outlet panel with the top edge of the condensing heat exchanger assembly, and align the top edge of the condensing heat exchanger outlet panel with the bottom edge of the primary cell inlet panel.
2. The orange foam gasket must be between the primary cell outlet panel and the containment plate that is attached to the condensing heat exchanger. The white fiber gasket or equivalent must be between the primary cell inlet panel and the condensing heat exchanger outlet panel.
3. Insert all the screws, except the outboard screws in the primary outlet panel, to secure the primary heat exchanger panels to the condensing heat exchanger panels (front and back). See Fig. 5.
4. Remove the screws used to temporarily hold the Containment Plate in place.

## Install Coupling Box Cover/Finger Baffles

1. Apply a 1/4" bead of low adhesion silicone (white) to the coupling box cover in the pattern shown in Fig. 9.
2. Align the Coupling Box Cover over the rear of the Heat Exchanger Assembly. See Fig. 5 and Fig. 6.
3. Install the screws that secure the bottom edge and sides of the Coupling Box to the Heat Exchanger Assembly.
4. Align the Finger Baffles along the top edge of the Coupling Box Cover. See Fig. 5.
5. Install the screws for the Finger Baffles and the remaining screws for the top edge of the Coupling Box Cover.

## Install Sidewall Baffles

1. Avoid damaging the cell panel insulation by inserting the sidewall baffle inward from the rear of coupling box to the indexing tab on the primary cell panel then align the baffle with the coupling box cover.
   Insert the slot on the sidewall baffle over the tab on the primary cell panel. See Fig. 6.

**NOTE**: The front edge of the sidewall baffle has a slot that engages a tab on the primary cell panel.

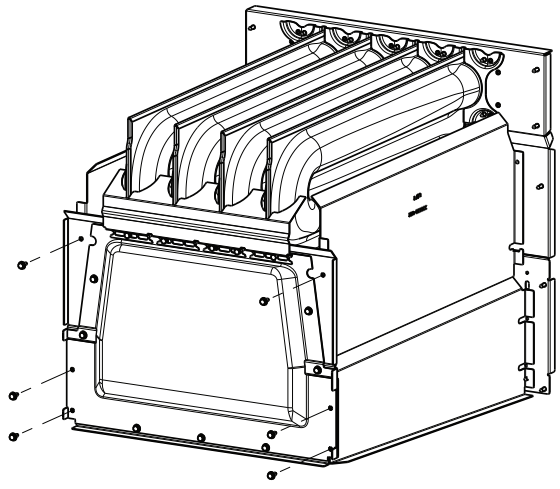


**Fig. 6 - Sidewall Baffle Removal / Installation - Rear View**

2. Insert the screws that attach the sidewall baffle to the primary cell panel.
3. Align the rear edge of the baffle with the screw holes in the coupling box cover.
4. Insert the screws that attach the sidewall baffles to the coupling box.

## Heat Exchanger Assembly Installation

1. Lift the heat exchanger assembly and set the rear of the assembly on the blower deck.
2. Slide the heat exchanger onto the support rails in the furnace casing.
3. Raise the rear of the heat exchanger and set the bottom of the sidewall baffles on top of the support rails in the blower deck.
4. Slide the heat exchanger assembly into the casing, making sure the bottom edge of the sidewall baffle slides into the engagement tab on the support rails.

**NOTE**: Be sure cell panel insulation is folded over the top flange of the primary cell inlet panel so that when the heat exchanger is fully installed, the insulation seals between the top plate and the top flange of the cell panel.

**NOTE**: Be sure the cell panel insulation is visible on both sides of the heat exchanger cell panel so that when the heat exchanger is fully installed, the insulation seals between the cell panel and the mounting brackets. If any insulation is not visible, pull the heat exchanger forward, adjust the insulation and reinstall so that the cell panel is properly sealed to the top plate and to the mounting brackets.

5. Continue to slide the heat exchanger assembly backward into the casing until the primary cell panel is flush with the mounting brackets on the side of the casing.
6. Align the primary cell panel with the mounting brackets.
7. Insert the screws that attach the primary cell panel to mounting brackets on the casing.
8. Align the filler plate to the bottom edge of the condensing heat exchanger assembly.
9. Secure the filler plate to the condensing heat exchanger and casing.

## Collector Box Installation

1. Verify old collector box gasket has been removed from heat exchanger. See Fig 7.
2. Remove adhesive backing from collector box gasket and align gasket on the collector box.
3. Attach the gasket to the collector box.
4. Remove the adhesive backing from the condensate trap gasket.
5. Attach the gasket over the drain outlets on the collector box.
6. Repeat the procedure for the drain outlet.

**NOTE**: There is a slot on each side of the front panel of the condensing heat exchanger. The collector box has alignment tabs on the back that fit into the slots on the condensing heat exchanger panel.

7. Align the tabs on the collector box to the slots on the condensing heat exchanger panel.
8. With the collector box fully seated against the condensing heat exchanger cell panel, install the screws through the collector box.
9. Tighten the screws in an alternating pattern around the collector box. Do not over-tighten.

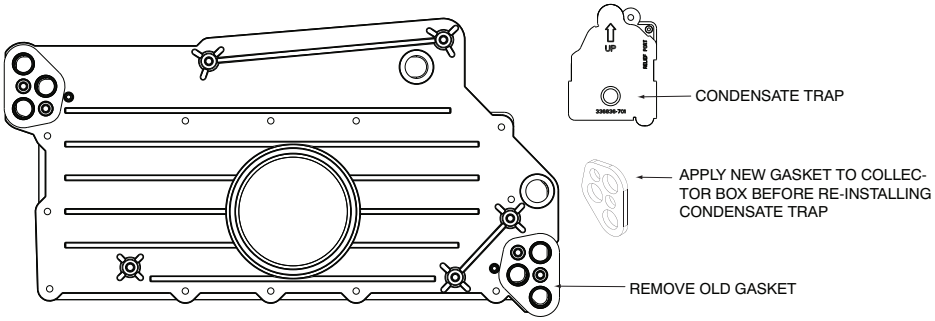


A11442

**Fig. 7 - Collector Box Gasket Condensate Trap**

## Install J-box and Main Harness

1. Insert grommet for main harness in the slot in the blower shelf.
2. Align the door switch to the blower shelf.
3. Align and install door bracket to the front edge of the blower shelf and secure the door switch during upper door bracket installation.
4. Connect the field wiring from the factory wiring and attach the ground wire to the green ground screw on the J-box bracket.
5. Attach the J-box cover to the J-box bracket.
6. Install the screw to secure the J-box cover to the bracket.
7. Connect the factory wires to the main limit switch.

## Install the Condensate Trap and Drain

**NOTE**: If the condensate trap is removed, a new gasket between the trap and collector box is required. Verify a condensate trap gasket is included in the service kit or obtain one from your local distributor.

1. Align the trap with the drain outlet on the collector box.
2. Secure the trap to the collector box with the screw.
3. Connect the condensate trap relief tube from collector box port and insert the tube into the molded retainer clips on the inducer housing.
4. Insert the condensate drain elbow through the casing until it is properly seated. Or, connect the drain elbow to the drain extension pipe and route the pipe behind the inducer.
5. Connect the drain elbow to the condensate trap.

**NOTE**: If condensate has a heat pad attached to the trap, trace the wires for the pad back to the connection point and connect the wires for the heat pad.

## Inducer Assembly Installation

1. Verify any remaining gaskets on the collector box are removed and discarded.
2. Verify the inducer assembly has gaskets on the drain stubs and at the inducer inlet.
3. Verify the choke plate is installed on the inlet opening of the inducer.
4. Align the tabs on inducer assembly to the brass inserts on the collector box.
5. Insert the mounting screws through the tabs to secure the inducer to the collector box. Remember there is a mounting tab located under the vent elbow.
6. Connect the inducer leads from the main wiring harness to the inducer motor harness.

## Pressure Switch Installation

**NOTE**: There are two types of pressure switches. The modulating pressure switch assembly has three pressure switches.

Two are side-by-side with the third switch mounted to the back of one of the switches.

All other furnaces have two pressure switches mounted back-to-back.

The tube for the front pressure switch connects the switch to the port on the collector box. The tube for the switch mounted on the back connects the switch to the port on the inducer assembly.

1. Connect the wires to the back pressure switch.
2. Connect the tube for the back pressure switch to the inducer assembly.
3. Connect the tube for the front pressure switch to the port on the collector box.
4. Attach the pressure switch assembly to the inducer.
5. Connect the pressure switch harness (modulating only) to the main wiring harness or attach the individual wires to the pressure switch (non-modulating).
6. If necessary, route the pressure switch tubing for the front pressure switch through the stand-off on the inducer assembly.
7. If necessary, route the condensate trap relief tubing through the stand-off on the inducer assembly. Reconnect tubing to the ports on the condensate trap and collector box.

## Burner Box/Manifold Installation

1. Support the burner box assembly and install the screws that attach the burner box to the heat exchanger cell panel.
2. Align the orifices in the manifold assembly with the support rings on the end of the burner.
3. Insert the orifices in the support rings of the burners. Manifold mounting tabs should fit flush against the burner box

**NOTE**: If manifold does not fit flush against the burner box, the burners are not fully seated forward. Remove the manifold and check burner positioning in the burner box assembly.

4. Attach the green/yellow wire and ground terminal to one of the manifold mounting screws.
5. Install the remaining manifold mounting screws.
6. Connect the wires to both roll-out switches.
7. Connect the wires to the flame sensor and hot surface igniter.
8. Connect the connector harness from gas valve (Modulating only) or attach the individual wires to the terminals on gas valve (All other models).

**NOTE**: Use only propane-resistant pipe dope. Do not use Teflon tape.

9. Insert the gas pipe through the grommet in the casing. Apply a thin layer of pipe dope to the threads of the pipe and thread the pipe by into the gas valve.

**NOTE**: Use a back-up wrench on the gas valve to prevent the valve from rotating on the manifold or damaging the mounting to the burner box.

10. With a back-up wrench on the inlet boss of the gas valve, finish tightening the gas pipe to the gas valve.
11. Turn gas on at electric switch on gas valve.
12. Turn power on at external disconnect, fuse or circuit breaker.

## Vent Pipe Installation

1. Insert the vent pipe through the intended vent opening of the furnace casing and insert into the outlet of the inducer vent elbow.
2. Tighten the clamp for the vent pipe at vent elbow on the inducer assembly.
3. Align the remaining vent pipe system to the vent pipe in the furnace casing.
4. Solvent cement the pipes as required for the type of material used.
5. Tighten both clamps at the vent pipe support attached to furnace casing.

## Unit Checkout

**⚠ WARNING**

**FIRE OR EXPLOSION HAZARD**

Failure to follow this warning could result in personal injury, death and/or property damage.

Never purge a gas line into a combustion chamber. Never test for gas leaks with an open flame. Use a commercially available soap solution made specifically for the detection of leaks to check all connections. A fire or explosion may result causing property damage, personal injury or loss of life.

1. Set thermostat to “OFF”.
2. Turn on power at external disconnect, fuse or circuit breaker.
3. Turn on gas at external shut-off or gas meter.
4. Check for gas leaks with a commercially available soap solution made specifically for the detection of leaks.
5. Manually close blower door switch.
6. Initiate component test through circuit board by referring to **“Component Test”** on status code label on blower access door for complete test sequence information.
7. If any status codes are flashed, refer to status code label on unit blower door.
8. Turn thermostat fan switch to “ON”, “Continuous” or jumper R to G terminals at furnace control board.
9. Check for air leakage around cell panel. It may be necessary to remove heat exchanger assembly and top gasket between cell panel and furnace casing top plate. Re-install and re-check for blower air leaks.
10. Remove jumper(s) or set thermostat fan to “Auto” or “OFF”.
11. Release blower door switch.
12. Install blower access door.
13. Set thermostat to call for heat.
14. Allow unit to initiate a complete call for heat cycle.
15. Check for air leakage around collector box. A whistling noise may indicate air leak in collector box seal.

**NOTE**: If there is a severe air leak in the collector box seal, pressure switch may not close or will re-open, resulting in no ignition or erratic burner operation.

**NOTE**: Heat Exchanger failure may have been caused by one or more of the following conditions. As part of the system check-out, verify that the following conditions are not affecting the operation of the furnace:

- Short Cycling-Defective thermostat: Incorrect thermostat anticipator setting, dirty filter or over-sized furnace.
- Under firing/low Btu input: Set manifold pressure and verify firing rate as shown on rating plate by clocking the gas meter.
- Over-firing/high Btu input: Set manifold pressure and verify firing rate as shown on rating plate by clocking the gas meter.
- Low temperature rise: Set unit for correct temperature rise range as shown on unit rating plate.
- Contaminated combustion air: Remove contaminates or provide ample fresh air for combustion.
- Excessive amounts of outside ventilation air: Return air temperature cannot be below 60 degrees F for extended periods of time.
- Incorrect venting or termination: Recirculation of products of combustion into the combustion air pipe can damage the furnace. Verify proper venting and vent termination per installation instructions. For additional information, and a complete sequence of furnace operation, refer to furnace Installation, Start-Up and Operating Instructions.

16. After System Check-out is complete, set thermostat below room temperature.
17. Verify that burner shuts down and blower completes selected off delay time.
18. Verify furnace operates properly and set thermostat to desired room temperature.
19. Re-install outer door.

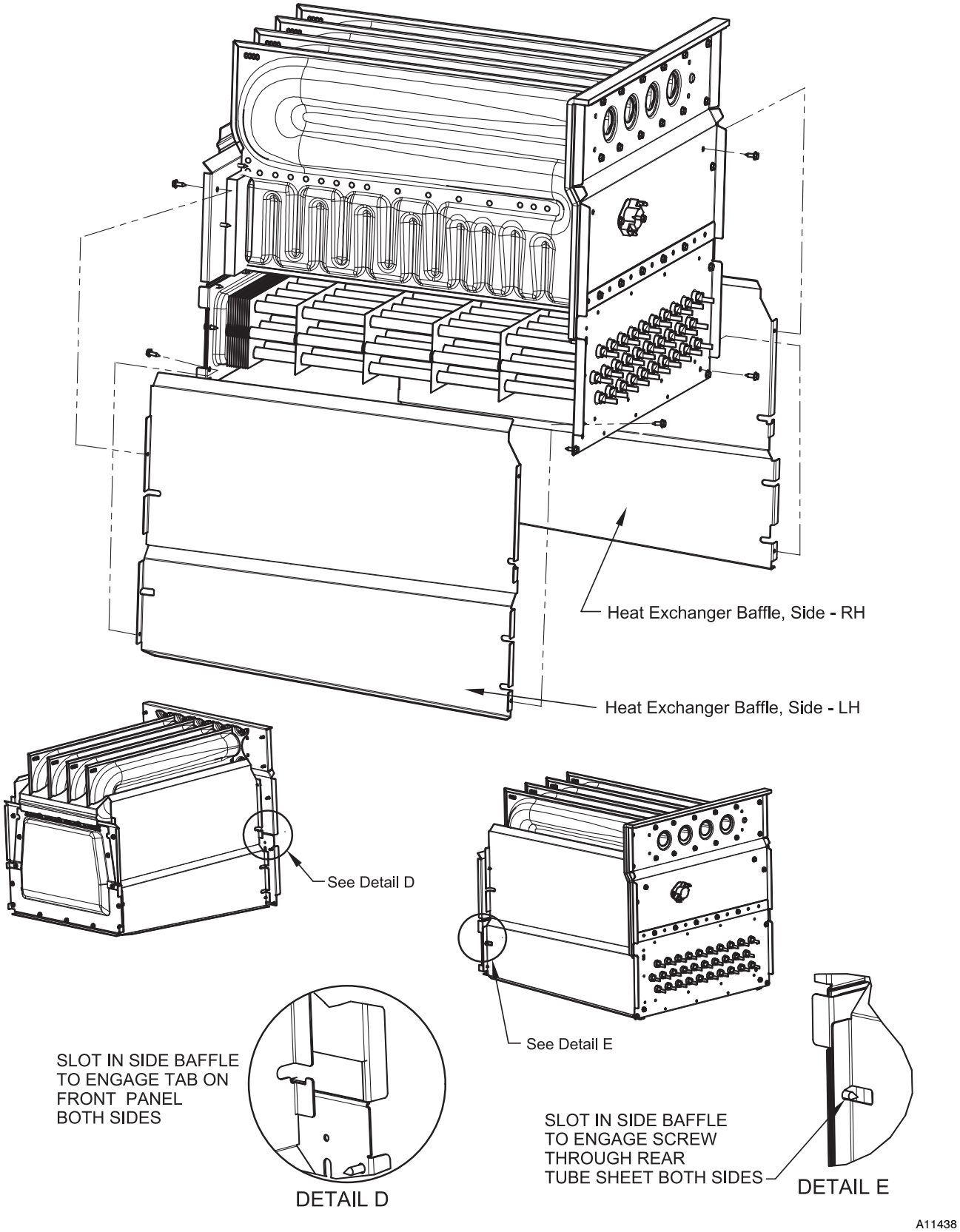


**Fig. 8 - Heat Exchanger Panel Assembly**

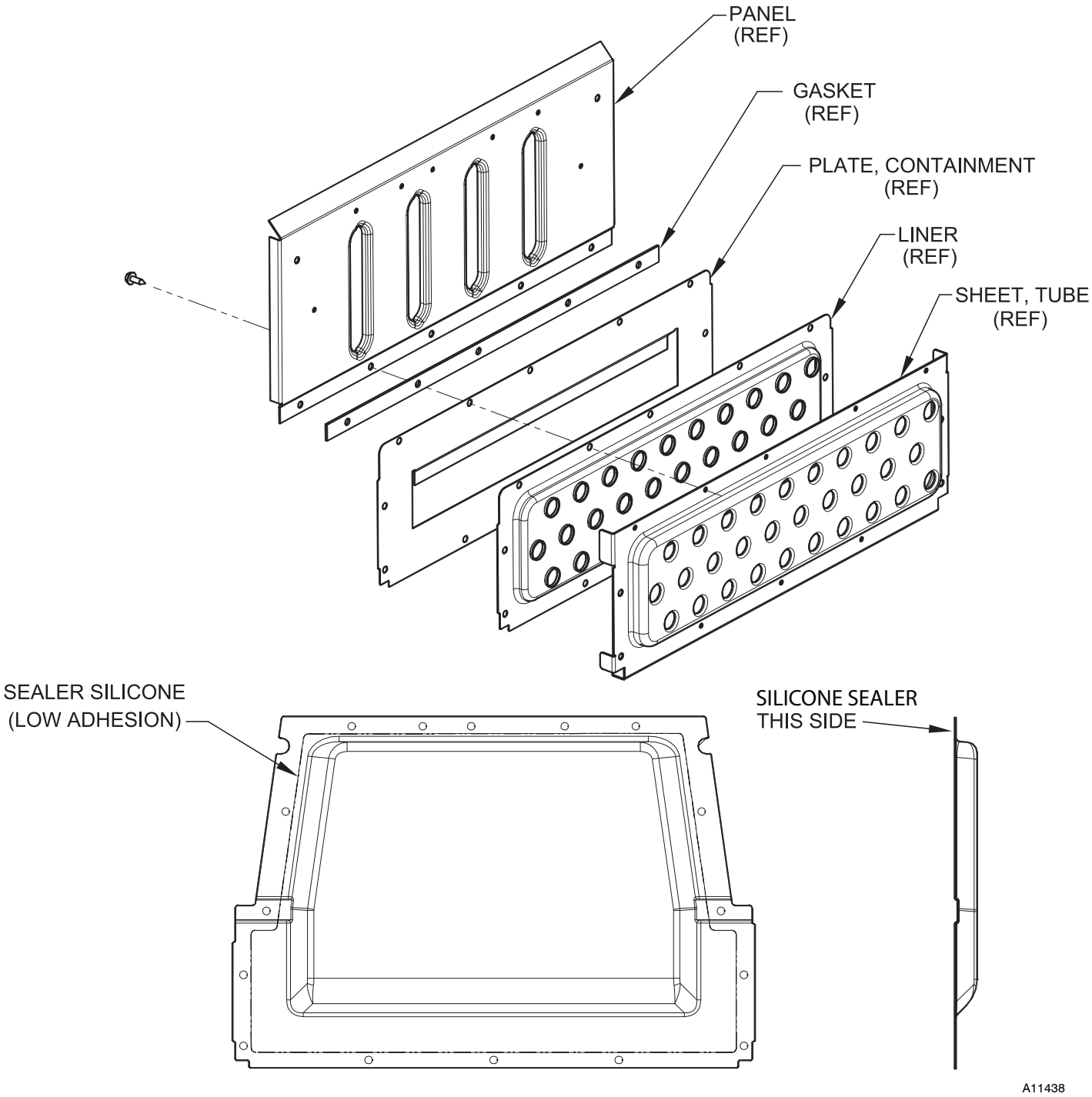


**Fig. 9 - Collector Box Sealant Application**