38MARB
Outdoor Unit Single Zone Ductless System
Sizes 06 to 36

Product Data

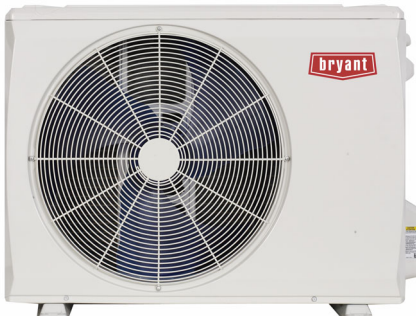

A220408

Fig. 1 —Sizes 06K - 36K

NOTE: Images are for illustration purposes **only**. Actual models may differ slightly.

TABLE OF CONTENTS

	PAGE
INDUSTRY LEADING FEATURES / BENEFITS	1
MODEL NUMBER NOMENCLATURE	3
STANDARD FEATURES AND ACCESSORIES	4
DIMENSIONS	5
CLEARANCES	9
SPECIFICATIONS	10
PERFORMANCE	11
COOLING PERFORMANCE - AHU	49
HEATING PERFORMANCE - AHU	61
APPLICATION DATA	65
WIRING	66
ELECTRICAL DATA	68
CONNECTION DIAGRAMS	69
WIRING DIAGRAMS	70
GUIDE SPECIFICATIONS	74

INDUSTRY LEADING FEATURES / BENEFITS

A PERFECT BALANCE BETWEEN BUDGET LIMITS, ENERGY SAVINGS AND COMFORT.

The **38MARB** series ductless systems are a matched combination of an outdoor condensing unit and an indoor fan coil unit connected only by refrigerant tubing and wires.

The ductless system permits creative solutions to design problems such as:

- Add-ons to current space (an office or family room addition)
- Special space requirements
- When changes in the load cannot be handled by the existing system
- When adding air conditioning to spaces that are heated by hydronic or electric heat and have no ductwork
- Historical renovations or any application where preserving the look of the original structure is essential.

The ideal compliment to your ducted system when it is impractical or prohibitively expensive to use ductwork.

The compact indoor fan coil units take up very little space in the room and do not obstruct windows. The fan coils are attractively styled to blend with most room decors. Advanced system components incorporate innovative technology to provide reliable cooling performance at low sound levels.

Inverter Technology

The inverter driven compressor is designed to run at various input power frequencies (Hz) which controls the compressor's motor speed.

Even Temperature – The control package, including the inverter, monitors the outdoor and indoor temperatures as they relate to the selected indoor set point and adjusts the compressor speed to match the load and keep the system operating continuously rather than cycling and creating temperature swings. This translates to higher comfort levels for the occupants.

Rapid Pull Down/Warm-Up – Comfort is increased by the inverter system's ability to ramp up the compressor speed enabling the system to reach the user selected room temperature set point quicker.

Humidity Control – Running the system for longer periods and continuously varying the compressor speed enhances the humidity control.

Individual Room Comfort

Maximum comfort is provided because each space can be controlled individually based on the usage pattern.

Low Sound Levels

When noise is a concern, ductless systems are the answer. The indoor units are whisper quiet. There are no compressors indoors, either in the conditioned space or directly over it, and there is none of the noise usually generated by air being forced through the ductwork.

When sound ordinances and proximity to neighbors demand quiet operation, the **38MARB** unit is the right choice. With the inverter technology, these units run at lower speeds most of the time resulting in reduced sound levels.

Inverter Technology – Enhanced Economical Operation

Ductless systems are inherently economical to operate. Individual rooms are heated or cooled only when required, and since the air is delivered directly to the space, there is no need to use additional energy to move the air in the ductwork. This economical operation is enhanced further when the inverter system output matches the load resulting in a more efficient system.

Easy-To-Use Controls

The systems have microprocessor-based controls to provide the ultimate in comfort and efficiency. The user friendly wired and wireless remote controls provide the interface between the user and the unit.

Secure Operation

If security is an issue, outdoor and indoor units are connected only by refrigerant piping and wiring to prevent intruders from crawling through ductwork or wall openings. In addition, since the **38MARB** can be installed close to an outside wall, coils are protected from vandals and severe weather.

Fast Installation

This compact ductless system is simple to install. Only wires and piping need to run between the indoor and outdoor units. These units are fast and easy to install ensuring minimal disruption to customers in homes or the workplace. This makes the **38MARB** systems the equipment of choice for retrofit applications.

Simple Servicing and Maintenance

Removing the top panel of the outdoor unit provides immediate access to the control compartment, providing the service technician access to the diagnostic LEDs to facilitate the troubleshooting process. In addition, the draw-thru design of the outdoor unit means that dirt accumulates on the outside surface of the coil. Coils can be cleaned quickly from the inside using a pressure hose and detergent.

On the indoor units, service and maintenance expense is reduced due to the permanent easy to clean filters. Also, error codes are displayed on the front panel to alert the user to certain system malfunctions.

Built-in Reliability

Ductless system indoor and outdoor units are designed to provide years of trouble-free operation. Both the indoor and outdoor units are well protected. Whenever the microprocessor detects abnormal conditions, the unit stops and an error code appears.

Inverter systems provide additional reliability due to the soft start. This refers to the ability of the inverter to start the compressor motor using reduced voltage and reduced current. This feature is beneficial from an electrical standpoint (eliminates current spikes) as well as an overall reliability standpoint due to reduced stress on all associated system components.

Agency Listings

All systems are listed with AHRI (Air conditioning, Heating, and Refrigeration Institute) and are UL certified per UL 60335-2-40 standard.

Manufacturer reserves the right to change, at any time, specifications and designs without notice and without obligations.

MODEL NUMBER NOMENCLATURE

OUTDOOR UNIT

38 MA R B Q 36 A B 3

38 = OUTDOOR UNIT

MA = MODEL

SYSTEM TYPE
R = OUTDOOR

MAJOR SERIES

UNIT TYPE
Q = HEAT PUMP

VOLTAGE
1=115-1-60
3=208/230-1-60

VARIATION
A = STANDARD
B = AHU Only (36K model)

NUMBER OF CONNECTABLE INDOOR UNITS
INDOOR UNITS
X = 0
A = 1
B = 2

NOMINAL CAPACITY
06 - 1/2 TON
09 - 3/4 TON
12 - 1 TON
18 - 1-1/2 TONS
24 - 2 TONS
30 - 2-1/2 TONS
36 - 3 TONS

A220411

Use of the AHRI Certified TM Mark indicates a manufacturer's participation in the program For verification of certification for individual products, go to www.ahridirectory.org.

A220412

STANDARD FEATURES AND ACCESSORIES

Ease Of Installation	
Low Voltage Controls	S
Comfort Features	
Microprocessor Controls	S
Auto Restart Function	S
Auto Changeover	S
Energy Saving Features	
Inverter Driven Compressor	S
46° F Heating Mode (Heating Setback)	S
Safety And Reliability	
3 Minute Time Delay For Compressor	S
High Compressor Discharge Temperature	S
Low Voltage Protection	S
Compressor Overload Protection	S
Compressor Over Current Protection	S
IPM Module Protection	S
Condenser High Temp Protection in Cooling Mode	S
Aluminum Hydrophilic pre-coated fins	S
Ease Of Service And Maintenance	
Diagnostics	S
Liquid Line Pressure Taps	S
Application Flexibility	
Crankcase Heater	S
Base pan Heater	S

Legend

- **S - Standard**
- **A - Accessory**

Accessories

Outdoor Unit Model Number	Base Pan Base Rubber Plugs RCD Part No.	Quantity per Unit
38MARBQ12AA1 38MARBQ06AA3 38MARBQ09AA3 38MARBQ12AA3	12600801A00077	13
38MARBQ18AA3	12600801A00077	25
38MARBQ24AA3 38MARBQ30AA3 38MARBQ36AA3 38MARBQ36AB3	12600801A00117	5

NOTE: The base pan is built in with multiple holes for proper draining during the defrost process. For applications where it is required to seal these holes, and re-direct the condensate drain, rubber plugs are available through RCD.

Outdoor Units

Crankcase Unit

The crankcase heater is standard on all unit sizes. Heater clamps must be placed around the compressor oil stump.

Base pan Heater

The base pan heater is standard on all unit sizes.

Manufacturer reserves the right to change, at any time, specifications and designs without notice and without obligations.

DIMENSIONS

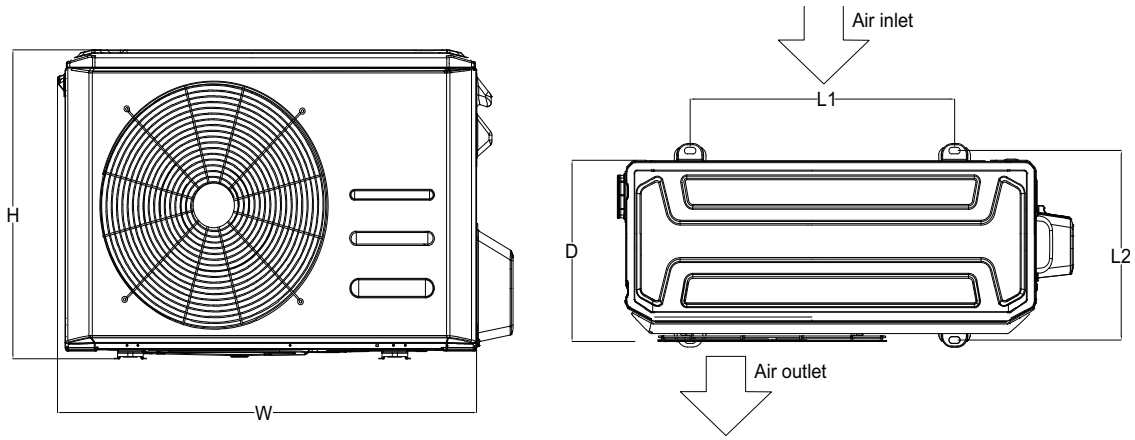

Fig. 2 — Outdoor Unit

SYSTEM SIZE			12K	6K	9K	12K	18K	24K	30K	36K
			(115V)	(208/230V)	(208/230V)	(208/230V)	(208/230V)	(208/230V)	(208/230V)	(208/230V)
OUTDOOR UNIT	**UNIT**									
	Height (H)	in (mm)	21.85 (555)	21.85 (555)	21.81 (554)	21.81 (554)	26.50 (673)	31.89 (810)	31.89(810)	31.89 (810)
	Width (W)	in (mm)	30.12 (765)	30.12 (765)	31.69 (805)	31.69 (805)	35.04 (890)	37.24 (946)	37.24(946)	37.24 (946)
	Depth (D)	in (mm)	11.93 (303)	11.93 (303)	12.99 (330)	12.99 (330)	13.46 (342)	16.14 (410)	16.14(410)	16.14 (410)
	Weight - Net	lbs. (kg)	66.80 (30.3)	63.71(28.9)	74.07 (33.6)	73.63 (33.4)	100.97 (45.8)	134.48 (61)	141.76(64.3)	150.13 (68.1) 155.42 (70.4) ǂ
	L1	in. (mm)	17.81 (452)	17.81 (452)	20.10 (511)	20.10 (511)	26.10 (663)	26.50 (673)	26.50 (673)	26.50 (673)
	L2	in. (mm)	11.25 (286)	11.25 (286)	12.50 (317)	12.50 (317)	13.70 (347)	15.85 (403)	15.85 (403)	15.85 (403)
	PACKAGING									
	Height	in (mm)	24.02 (610)	24.02 (610)	24.21 (615)	24.21 (615)	29.13 (740)	34.84 (885)	34.84(885)	34.84 (885)
	Width	in (mm)	34.92 (887)	34.92 (887)	36.02 (915)	36.02 (915)	39.17 (995)	42.91 (1090)	42.91(1090)	42.91 (1090)
	Depth	in (mm)	13.27 (337)	13.27 (337)	14.57 (370)	14.57 (370)	15.67 (398)	19.69 (500)	19.69(500)	19.69 (500)
	Weight - Gross	lbs. (kg)	72.31 (32.8)	69(31.3)	80.25 (36.4)	79.37 (36)	108.03 (49)	144.40 (65.5)	151.90(68.9)	158.95 (72.1) 166.23 (75.4)ǂ
	Carton Drawing No.	--	877*327*590	877*327*590	905*360*590	905*360*590	985*388*720	1075*485*86	1075*485*86	1075*485*86
	Carton Material	--	Carton Box							
	Material Thickness	in (mm)	0.197 (5)	0.197 (5)	0.197 (5)	0.197 (5)	0.197 (5)	0.295 (7.5)	0.295(7.5)	0.295 (7.5)

NOTE: ǂ AHU only

DIMENSIONS

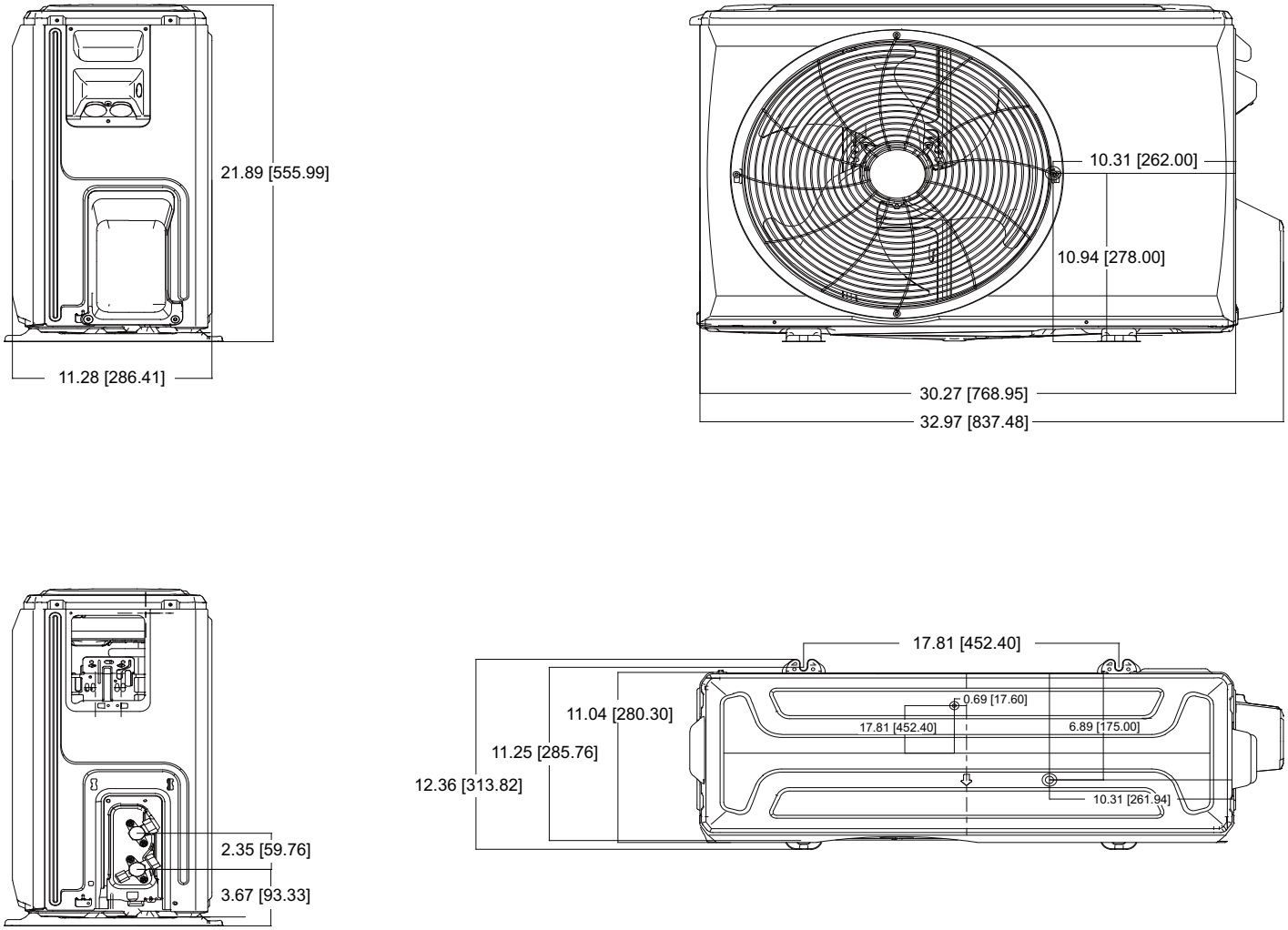

Fig. 3 —Dimensions Sizes 12K (115V) and 6K (208/230V)

DIMENSIONS (CONT)

11.26 [286.41]

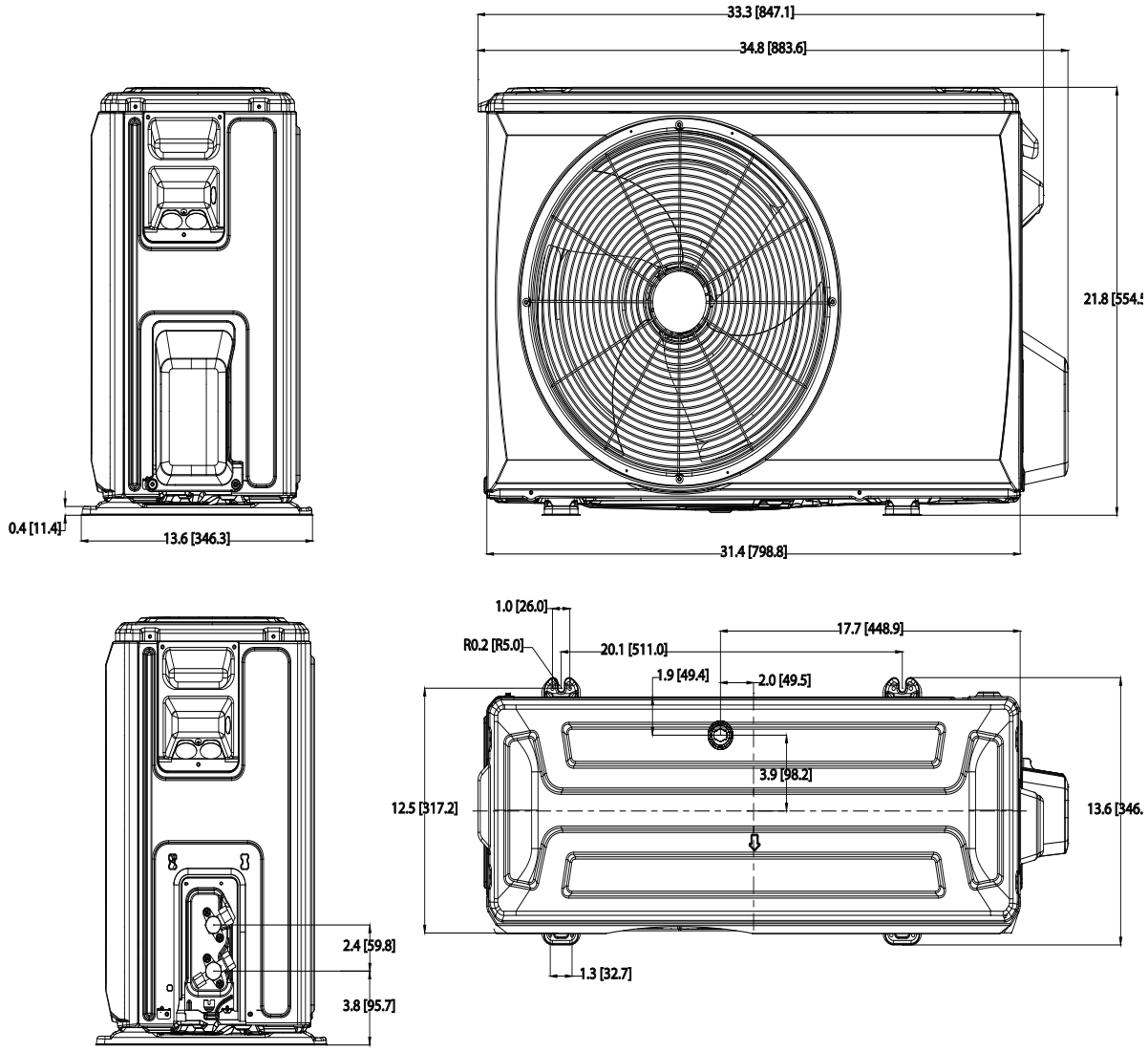

Fig. 4 —Dimension Sizes 09K-12K

DIMENSIONS (CONT)

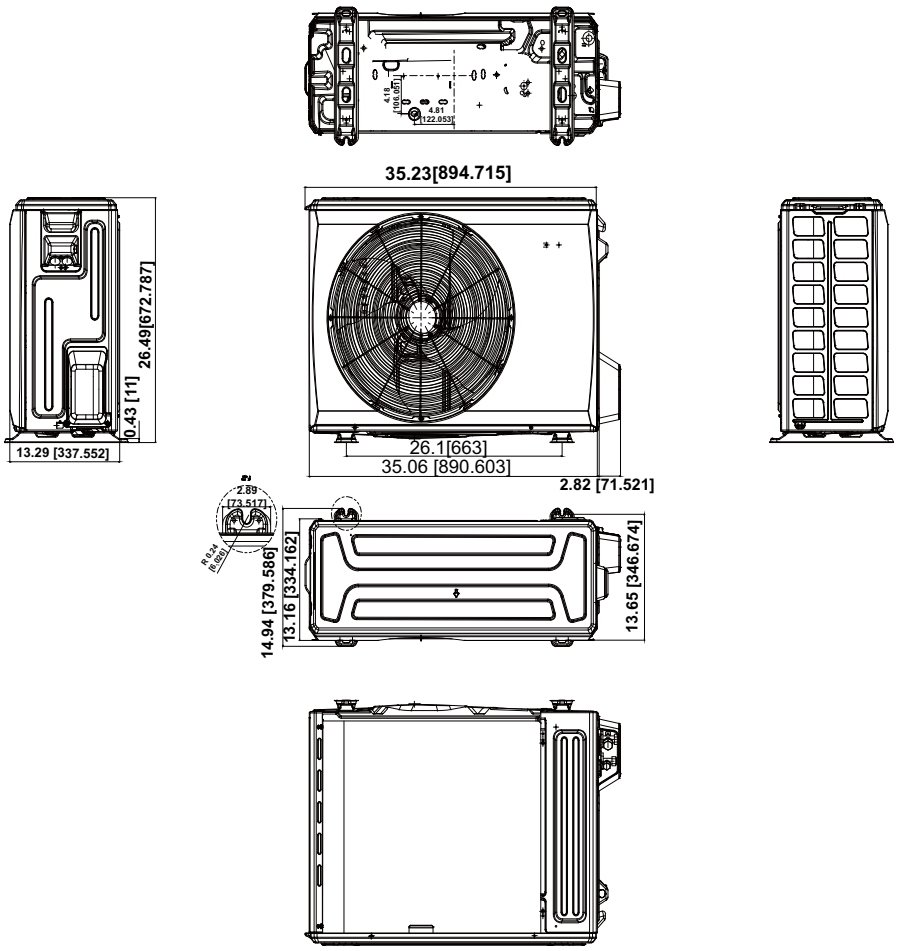

A220417

Fig. 5 —Dimension Size 18K

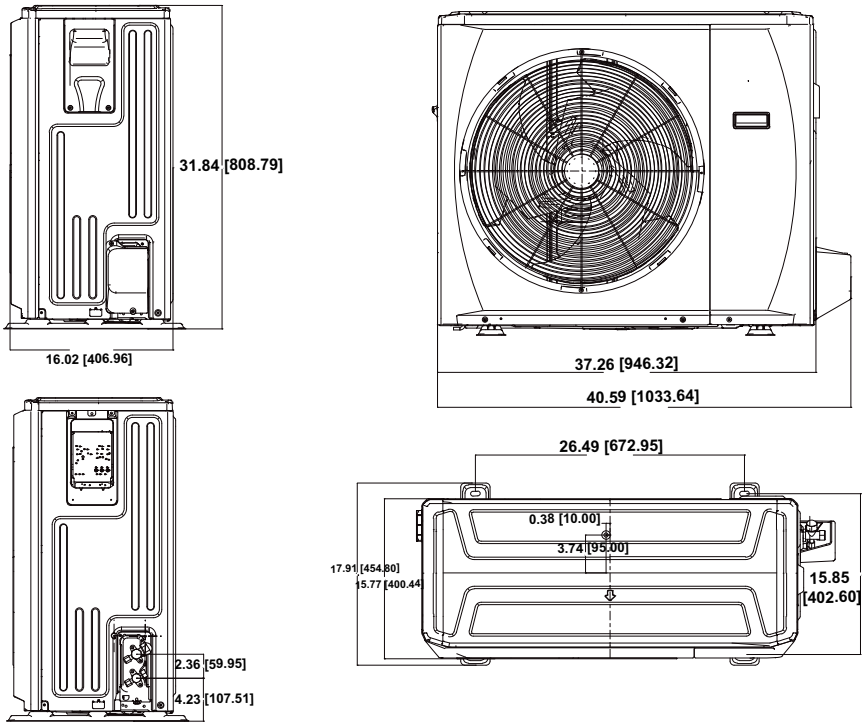

A220418

Fig. 6 —Dimension Sizes 24K, 30K, and 36K

CLEARANCES

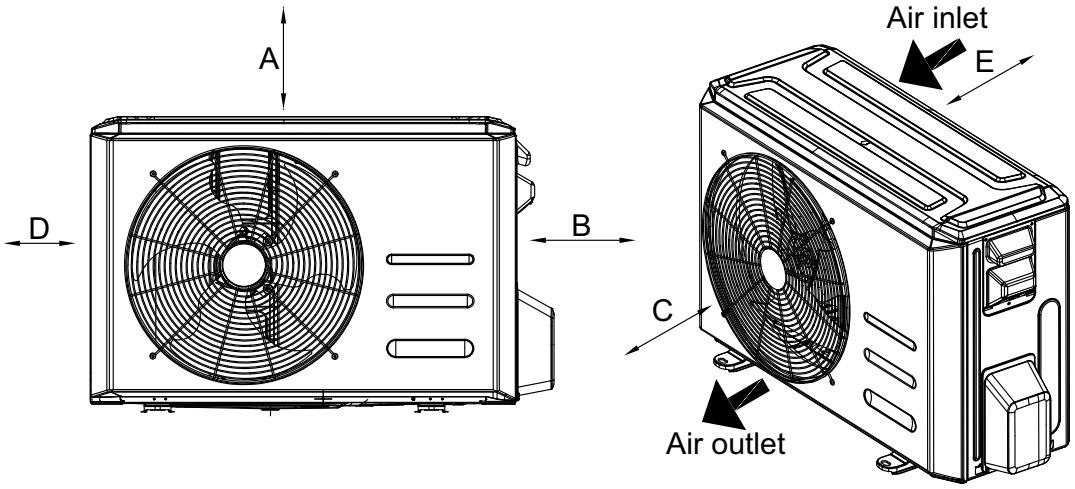

A220419

Fig. 7 —Clearances

UNIT	MINIMUM VALUE in. (mm)
A	24 (610)
B	24 (610)
C	24 (610)
D	4 (101)
E	4 (101)

NOTE: The outdoor unit must be mounted at least 2in (50mm) above the maximum anticipated snow depth.

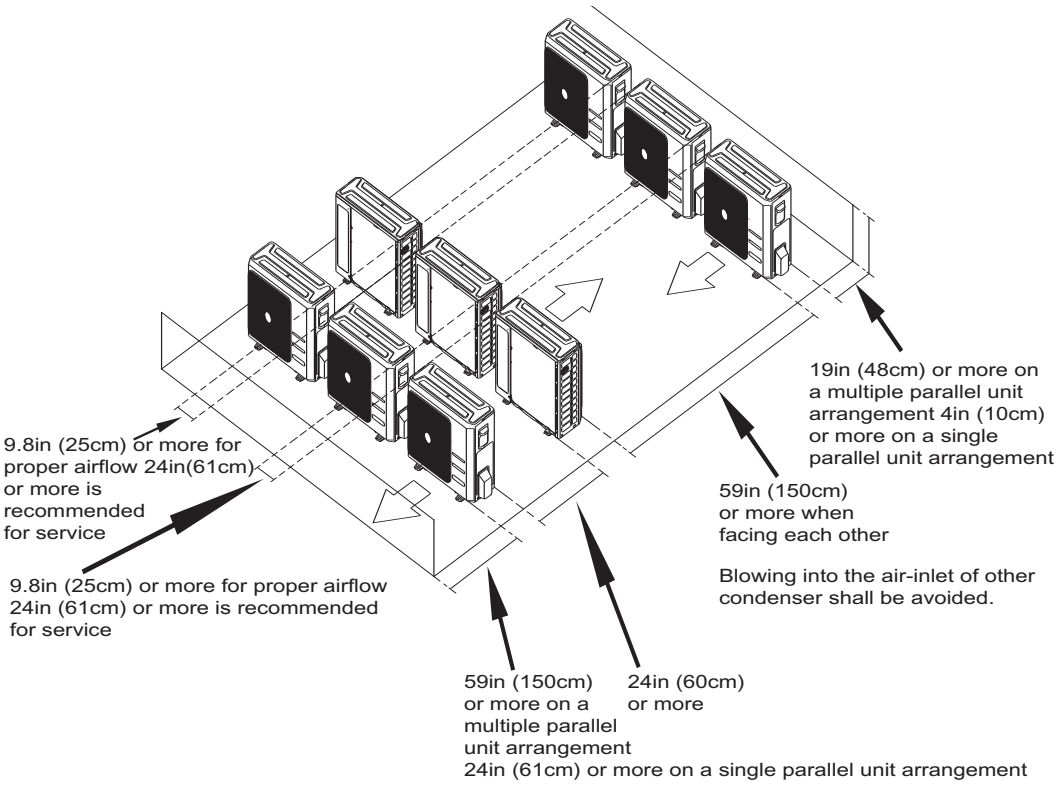

A220421

Fig. 8 —Clearances for multiple units

SPECIFICATIONS

System	Size		12K - 115V	6K	9K	12K - 208/230V	18K	24K	30K	36K	36K - AHU Only
	Outdoor Model		38MARBQ12AA1	38MARBQ06AA3	38MARBQ09AA3	38MARBQ12AA3	38MARBQ18AA3	38MARBQ24AA3	38MARBQ30AA3	38MARBQ36AA3	38MARBQ36AB3
Electrical	Voltage, Phase, Cycle	V/Ph/ Hz	115-1-60	208/230-1-60	208/230-1-60	208/230-1-60	208/230-1-60	208/230-1-60	208/230-1-60	208/230-1-60	208/230-1-60
	MCA	A.	19	13	15	15	16	25	23	28	30
	Recommended Fuse Size	A.	20	15	15	15	20	30	25	30	35
	MOCP - Fuse Rating	A.	25	15	15	15	25	35	30	35	45
	Short Circuit Current Rating (SCCR)	kA	2.4	2.4	2.4	2.4	2.4	2.4	2.4	2.4	2.4
Operating Range	Cooling Outdoor DB Min - Max	°F(°C)	-22 ~ 122 (-30 ~ 50)	-22 ~ 122 (-30 ~ 50)	-22 ~ 122 (-30 ~ 50)	-22 ~ 122 (-30 ~ 50)	-22 ~ 122 (-30 ~ 50)	-22 ~ 122 (-30 ~ 50)	-22 ~ 122 (-30 ~ 50)	-22 ~ 122 (-30 ~ 50)	-22 ~ 122 (-30 ~ 50)
	Heating Outdoor DB Min - Max	°F(°C)	-22 ~ 86 (-30 ~ 30)	-22 ~ 86 (-30 ~ 30)	-22 ~ 86 (-30 ~ 30)	-22 ~ 86 (-30 ~ 30)	-22 ~ 86 (-30 ~ 30)	-22 ~ 86 (-30 ~ 30)	-22 ~ 86 (-30 ~ 30)	-22 ~ 86 (-30 ~ 30)	-22 ~ 86 (-30 ~ 30)
Piping	Total Piping Length	ft (m)	82 (25)	82 (25)	82 (25)	82 (25)	98 (30)	164 (50)	164 (50)	213 (65)	213 (65)
	Piping Lift*	ft (m)	32 (10)	32 (10)	32 (10)	32 (10)	65 (20)	82 (25)	82 (25)	98 (30)	98 (30)
	Pipe Connection Size - Liquid	in (mm)	1/4 (6.35)	1/4 (6.35)	1/4 (6.35)	1/4 (6.35)	1/4 (6.35)	3/8 (9.52)	3/8 (9.52)	3/8 (9.52)	3/8 (9.52)
	Pipe Connection Size - Suction	in (mm)	1/2 (12.7)	3/8 (9.52)	3/8 (9.52)	1/2 (12.7)	1/2 (12.7)	5/8 (16)	5/8 (16)	5/8 (16)	5/8 (16)
Refrigerant	Refrigerant Type		R410A	R410A	R410A	R410A	R410A	R410A	R410A	R410A	R410A
	Charge	lbs (kg)	2.47 (1.12)	2.38 (1.08)	2.6 (1.18)	2.6 (1.18)	4.08 (1.85)	5.73 (2.6)	6.06 (2.75)	7.50 (3.40)	7.05 (3.2)
	Additional Refrigerant (between Std & Max Piping Lengths)	Oz/ft (g/m)	0.161 (15)	0.161 (15)	0.161 (15)	0.161 (15)	0.161 (15)	0.322 (30)	0.322 (30)	0.322 (30)	0.322 (30)
	Metering Device		EEV	EEV	EEV	EEV	EEV	EEV	EEV	EEV	EEV
Outdoor Coil	Face Area	Sq. Ft.	4.04	4.04	4.67	4.67	5.9	8.16	8.14	8.14	8.16
	No. Rows		2	2	2	2	2	2	3	3	2
	Fins per inch		21	21	20	20	20	20	18	18	20
	Circuits		4	4	4	4	6	4	6	6	4
Compressor	Type		Rotary Inverter	Rotary Inverter	Rotary Inverter	Rotary Inverter	Rotary Inverter	Rotary Inverter	Rotary Inverter	Rotary Inverter	Rotary Inverter
	Model		KSK103D33UEZ3	KSK103D33UEZ3	KTN110D42UFZ	KTN110D42UFZ	KTM240D43UKT	KTM240D43UKT	KTF250D22UMT	KTF250D22UMT	KTF310D43UMT
	Oil Type		VG74	VG74	VG74	VG74	VG74	VG74	VG74	VG74	VG74
	Oil Charge	Fl. Oz.	10.48	10.48	11.84	11.84	20.97	20.97	22.66	22.66	33.8
	Rated Current	RLA	11.5	6.4	6	8.5	14.25	14.8	15	18	20
Airflow & Sound	Airflow	CFM	794.12	1324	1323.53	1323.53	1764.71	2235.29	2235.29	2235.29	3000
	Sound Pressure	dB(A)	54	54.5	54.5	56	59	62	63	61.5	64

* Condensing unit above or below the indoor unit

NOTE: See the current compatibility chart for list of indoor unit and outdoor unit match ups.

PERFORMANCE

High Wall

System Size		12K(115V)	6K(208/230V)	9K(208/230V)	12K(208/230V)	18K(208/230V)	24K(208/230V)	30K(208/230V)	36K(208/230V)
Energy Star*		YES	YES	YES	YES	YES	YES	NO	NO
Cooling System Tons	Ton	1.00	0.50	0.75	1.00	1.50	2.00	2.50	3.00
Cooling Rated Capacity	Btu/h	12,000	6,000	9,000	12,000	18,000	24,000	30,000	36,000
Cooling Cap. Range Min - Max	Btu/h	3,500~13,200	3,400~12,000	3,300~14,300	3,300~14,300	8,900~19,400	6,850~27,000	8,900~32,600	9,300~38,800
SEER2		23.0	26.5	28.1	25.5	21.5	21.5	20.1	17.5
EER2		13.0	15.8	16.2	14.0	12.5	13.0	11.5	8.5
Heating Rated Capacity (47°F)	Btu/h	12,000	7,000	12,000	12,000	18,000	29,000	30,000	36,000
Heating Rated Capacity (17°F)	Btu/h	8,400	8,500	9,500	10,000	15,000	19,800	19,000	22,400
Heating Rated Capacity (5°F)	Btu/h	7,100	7,500	10,500	12,000	18,000	25,200	20,600	20,400
Heating Maximum Capacity (17°F)	Btu/h	8,500	9,000	12,000	12,000	20,270	27,200	21,200	22,500
Heating Cap. Range Min - Max	Btu/h	5,000~12,200	3,500~11,500	5,000~15,200	5,000~15,300	15,100~19,500	11,600~33,000	12,300~34,100	11,550~37,000
HSPF2		9.9	13.0	11.5	10.4	10.7	11.4	9.0	8.0
COP (47°F)	W/W	3.52	3.92	3.81	3.88	3.10	3.40	2.90	2.51
COP (17°F)	W/W	2.80	2.90	2.53	2.41	2.35	2.87	2.30	2.18
COP (5°F)	W/W	2.18	2.10	1.80	1.80	1.80	1.80	1.94	1.80
Capacity Maintenance (5°F)	%	59%	107%	88%	100%	100%	87%	69%	57%
Capacity Maintenance (17°F)	%	70%	121%	79%	83%	83%	68%	63%	62%

*** Includes Cold Climate Designation**

Cassette

System Size		9K(208/230V)	12K(208/230V)	18K(208/230V)	24K(208/230V)
Energy Star*		YES	YES	YES	YES
Cooling System Tons	Ton	0.75	1.00	1.33	2.00
Cooling Rated Capacity	Btu/h	9,000	12,000	16,000	24,000
Cooling Cap. Range Min - Max	Btu/h	2,850~11100	3,000~13,700	5,600~17,000	8,000~25,000
SEER2		20.5	22.3	20.0	20.5
EER2		13.0	12.7	12.5	11.0
Heating Rated Capacity (47°F)	Btu/h	9,800	12,000	17,000	25,000
Heating Rated Capacity (17°F)	Btu/h	9,000	9,900	15,900	21,000
Heating Rated Capacity (5°F)	Btu/h	10,000	11,300	16,000	25,800
Heating Maximum Capacity (17°F)	Btu/h	11,800	14,000	17,000	25,800
Heating Cap. Range Min - Max	Btu/h	2,250~12,500	2,000~15,300	8,700~21,000	11,800~27,000
HSPF2		10.3	10.2	9.5	11.5
COP (47°F)	W/W	3.09	3.26	2.95	3.5
COP (17°F)	W/W	1.91	2.54	2.44	2.64
COP (5°F)	W/W	1.8	1.9	1.75	2
Capacity Maintenance (5°F)	%	102%	94%	94%	103%
Capacity Maintenance (17°F)	%	92%	83%	94%	84%

*** Includes Cold Climate Designation**

Manufacturer reserves the right to change, at any time, specifications and designs without notice and without obligations.

One-Way Cassette

System Size		6K(208/230V)	9K(208/230V)	12K(208/230V)	18K(208/230V)
Energy Star*		YES	YES	YES	YES
Cooling System Tons	Ton	0.75	1.00	1.33	2.00
Cooling Rated Capacity	Btu/h	6,500	9,000	12,000	16,700
Cooling Cap. Range Min - Max	Btu/h	3,600~11,200	3,600~12,200	4,000~14,100	6,100~17,500
SEER2		22.0	24.0	23.0	19.8
EER2		14.5	13.0	13.0	12.5
Heating Rated Capacity (47°F)	Btu/h	9,700	12,000	14,800	20,000
Heating Rated Capacity (17°F)	Btu/h	5,700	9,800	9,500	12,500
Heating Rated Capacity (5°F)	Btu/h	8,000	10,500	11,000	16,700
Heating Maximum Capacity (17°F)	Btu/h	10,000	11,400	11,500	18,800
Heating Cap. Range Min - Max	Btu/h	3,700~12,500	4,800~14,000	4,600~15,000	6,450~21,500
HSPF2		10.8	12.4	10.0	11.2
COP (47°F)	W/W	3.75	3.30	3.19	2.81
COP (17°F)	W/W	2.60	2.35	2.48	2.50
COP (5°F)	W/W	2.00	1.80	1.80	1.80
Capacity Maintenance (5°F)	%	82%	88%	74%	84%
Capacity Maintenance (17°F)	%	59%	82%	64%	63%

*** Includes Cold Climate Designation**

Console

System Size		12K(208/230V)	18K(208/230V)	24K(208/230V)
Energy Star*		YES	YES	YES
Cooling System Tons	Ton	0.75	1.00	1.33
Cooling Rated Capacity	Btu/h	12,000	17,000	24,000
Cooling Cap. Range Min - Max	Btu/h	7,600~14,400	7,800~19,900	5,400~26,800
SEER2		24.2	20.5	20.5
EER2		13.3	12.5	11.7
Heating Rated Capacity (47°F)	Btu/h	12,000	18,000	25,000
Heating Rated Capacity (17°F)	Btu/h	10,200	12,000	19,000
Heating Rated Capacity (5°F)	Btu/h	11,600	16,000	25,000
Heating Maximum Capacity (17°F)	Btu/h	12,800	17,000	28,600
Heating Cap. Range Min - Max	Btu/h	5,000~15,700	8,600~21,500	12,500~30,500
HSPF2		10.7	9.8	11.0
COP (47°F)	W/W	4.10	3.01	3.56
COP (17°F)	W/W	2.71	2.30	2.64
COP (5°F)	W/W	2.08	1.80	2.10
Capacity Maintenance (5°F)	%	97%	89%	100%
Capacity Maintenance (17°F)	%	85%	67%	76%

*** Includes Cold Climate Designation**

Manufacturer reserves the right to change, at any time, specifications and designs without notice and without obligations.

Ducted

System Size		9K(208/230V)	12K(208/230V)	18K(208/230V)	24K(208/230V)
Energy Star*		YES	YES	YES	YES
Cooling System Tons	Ton	0.75	1.00	1.33	1.61
Cooling Rated Capacity	Btu/h	9,000	12,000	17,000	24,000
Cooling Cap. Range Min - Max	Btu/h	2,400~12,500	2,250~14,400	6,500~18,800	6,500~27,800
SEER2		20.2	19.5	18	19.2
EER2		13.2	11.7	11.7	12
Heating Rated Capacity (47°F)	Btu/h	10,000	12,500	19,000	25,000
Heating Rated Capacity (17°F)	Btu/h	10,100	10,600	15,000	21,000
Heating Rated Capacity (5°F)	Btu/h	10,800	12,100	17,700	27,000
Heating Maximum Capacity (17°F)	Btu/h	11,600	12,600	19,000	24,000
Heating Cap. Range Min - Max	Btu/h	1,700~15,600	1,800~16,300	8,900~22,000	12,200~32,200
HSPF2		12.0	10.0	9.5	10.5
COP (47°F)	W/W	3.37	3.56	2.93	3.30
COP (17°F)	W/W	2.40	2.50	2.27	2.64
COP (5°F)	W/W	1.90	1.96	1.85	2.00
Capacity Maintenance (5°F)	%	108%	97%	93%	108%
Capacity Maintenance (17°F)	%	101%	85%	79%	84%

*** Includes Cold Climate Designation**

Air Handler

System Size		18K(208/230V)	24K(208/230V)	30K(208/230V)	36K(208/230V)	36K(208/230V)‡
Energy Star*		YES	YES	NO	NO	NO
Cooling System Tons	Ton	0.75	1.00	1.33	1.61	1.90
Cooling Rated Capacity	Btu/h	18,000	23,000	30,000	36,000	36,000
Cooling Cap. Range Min - Max	Btu/h	21000	25600	33600	38000	38000
SEER2		17.6	18.4	17.5	15.4	15.4
EER2		11.7	11.7	11.2	8.2	8.2
Heating Rated Capacity (47°F)	Btu/h	19,000	26,000	30,000	38,000	38,000
Heating Rated Capacity (17°F)	Btu/h	15,400	16,900	20,500	27,000	27,000
Heating Rated Capacity (5°F)	Btu/h	17,600	23,500	20,500	20,900	20,900
Heating Maximum Capacity (17°F)	Btu/h	18,200	25,000	22,000	27,200	27,200
Heating Cap. Range Min - Max	Btu/h	9,000~21,000	5,600~29,000	12,000~32,000	9,200~43,000	9,200~43,000
HSPF2		9.6	9.3	8.4	9.0	9.0
COP (47°F)	W/W	3.39	3.50	3.52	3.10	3.10
COP (17°F)	W/W	2.70	2.39	2.40	2.53	2.53
COP (5°F)	W/W	2.00	1.94	1.90	1.79	1.79
Capacity Maintenance (5°F)	%	93%	90%	68%	55%	55%
Capacity Maintenance (17°F)	%	81%	65%	68%	71%	71%

*** Includes Cold Climate Designation**
‡ Only paired with 38MARBQ36AB3

PERFORMANCE

COOLING PERFORMANCE - HIGH WALL

HIGH WALL (Sheet 1 of 2)

MODEL	COOLING Indoor Conditions DB	WB		OUTDOOR CONDITIONS (DB) (-22°F) (-25°C)	-13°F (-25°C)	-4°F (-20°C)	0°F (-17°C)	5°F (-15°C)	17°F (-8°C)	47°F (8°C)	77°F (25°C)	86°F (30°C)	95°F (35°C)	104°F (40°C)	113°F (45°C)	122°F (50°C)
12K (115V)	69.8°F (21°C)	59°F (15°C)	TC	13.55	13.20	12.85	12.18	12.29	11.05	11.23	11.23	10.79	10.79	9.11	7.34	5.20
			SC	10.14	9.88	9.62	8.65	8.73	8.12	8.22	8.22	8.03	8.08	6.84	6.18	5.06
			Input	0.82	0.83	0.83	0.86	0.86	0.93	0.54	0.88	0.84	1.03	1.00	0.89	0.73
	75.2°F (24°C)	62.6°F (17°C)	TC	14.57	14.22	13.87	13.20	13.31	12.08	12.25	12.25	11.81	11.81	10.13	8.36	6.22
			SC	10.55	10.30	10.05	9.56	9.64	8.75	8.87	8.87	8.56	8.56	7.34	6.06	4.50
			Input	0.83	0.84	0.84	0.87	0.87	0.94	0.55	0.89	0.85	1.04	1.01	0.90	0.74
	80.6°F (27°C)	66.2°F (19°C)	TC	15.53	15.18	14.83	14.16	14.27	13.04	13.21	13.21	12.77	12.77	11.09	9.32	7.18
			SC	11.02	10.78	10.53	10.05	10.13	9.25	9.38	9.38	9.07	9.06	7.87	6.62	5.10
			Input	0.85	0.85	0.85	0.89	0.88	0.95	0.56	0.90	0.86	1.06	1.02	0.91	0.76
	89.6°F (32°C)	73.4°F (23°C)	TC	17.30	16.95	16.60	15.93	16.04	14.81	14.98	14.98	14.54	14.54	12.86	11.09	8.95
			SC	11.20	10.98	10.75	10.32	10.39	9.59	9.70	9.70	9.42	9.42	8.33	7.18	5.80
			Input	0.87	0.88	0.88	0.91	0.91	0.98	0.59	0.93	0.89	1.08	1.05	0.94	0.78
6K (208-230V)	69.8°F (21°C)	59°F (15°C)	TC	13.40	13.09	12.77	12.45	12.21	11.37	11.21	10.79	10.56	10.32	9.39	8.30	6.36
			SC	9.63	9.41	9.18	8.52	8.40	7.95	7.92	7.69	7.57	7.41	7.02	6.49	5.60
			Input	0.63	0.65	0.66	0.72	0.75	0.80	0.47	0.68	0.82	0.96	0.97	0.97	0.89
	75.2°F (24°C)	62.6°F (17°C)	TC	14.38	14.06	13.75	13.42	13.19	12.34	12.18	11.76	11.53	11.29	10.37	9.27	7.33
			SC	10.30	10.07	9.84	9.61	9.45	8.84	8.72	8.42	8.26	8.09	7.42	6.64	5.25
			Input	0.63	0.65	0.67	0.73	0.75	0.80	0.47	0.68	0.82	0.96	0.97	0.98	0.89
	80.6°F (27°C)	66.2°F (19°C)	TC	15.32	15.01	14.69	14.37	14.13	13.28	13.12	12.70	12.48	12.24	11.31	10.22	8.28
			SC	10.80	10.58	10.35	10.13	9.96	9.36	9.25	8.95	8.79	8.62	7.97	7.20	5.83
			Input	0.64	0.66	0.68	0.74	0.77	0.81	0.48	0.69	0.83	0.97	0.98	0.99	0.90
	89.6°F (32°C)	73.4°F (23°C)	TC	17.15	16.83	16.52	16.20	15.96	15.11	14.95	14.53	14.30	14.06	13.14	12.05	10.10
			SC	12.14	11.92	11.69	11.46	11.30	10.70	10.58	10.29	10.12	9.96	9.30	8.53	7.15
			Input	0.66	0.68	0.70	0.76	0.79	0.84	0.50	0.71	0.85	0.99	1.01	1.01	0.92
9K (208-230V)	69.8°F (21°C)	59°F (15°C)	TC	12.14	11.96	11.77	10.51	11.00	11.14	11.59	11.12	12.01	11.48	10.21	9.01	5.36
			SC	8.78	8.65	8.52	7.85	8.10	8.22	11.83	8.19	8.57	8.31	7.67	7.06	5.31
			Input	0.20	0.26	0.31	0.26	0.38	0.42	0.59	0.70	1.01	1.10	1.09	1.05	0.68
	75.2°F (24°C)	62.6°F (17°C)	TC	13.10	12.92	12.74	11.47	11.96	12.10	12.56	12.08	12.98	12.45	11.17	9.98	6.33
			SC	9.61	9.48	9.34	8.41	8.77	8.88	9.21	8.86	9.52	9.13	8.19	7.32	4.64
			Input	0.22	0.27	0.32	0.28	0.39	0.43	0.60	0.71	1.03	1.12	1.10	1.07	0.69
	80.6°F (27°C)	66.2°F (19°C)	TC	14.11	13.93	13.75	12.48	12.97	13.11	13.56	13.09	13.98	13.46	12.18	10.99	7.33
			SC	10.20	10.06	9.93	9.02	9.37	9.47	9.80	9.46	10.10	9.72	8.80	7.94	5.30
			Input	0.23	0.28	0.34	0.29	0.40	0.44	0.62	0.73	1.04	1.13	1.12	1.08	0.70
	89.6°F (32°C)	73.4°F (23°C)	TC	16.06	15.88	15.69	14.43	14.92	15.06	15.51	15.04	15.93	15.41	14.13	12.94	9.28
			SC	11.66	11.52	11.39	10.47	10.83	10.93	11.26	10.91	11.56	11.18	10.25	9.39	6.74
			Input	0.26	0.31	0.36	0.32	0.43	0.47	0.64	0.76	1.07	1.16	1.14	1.11	0.73
12K (208-230V)	69.8°F (21°C)	59°F (15°C)	TC	12.51	12.30	12.09	11.16	10.76	11.07	11.85	11.50	12.53	12.19	10.59	8.56	4.48
			SC	8.60	8.46	8.31	8.22	7.93	7.79	8.18	8.05	8.57	8.38	7.67	6.68	4.47
			Input	0.24	0.29	0.34	0.34	0.35	0.48	0.59	0.70	1.00	1.21	1.09	1.07	0.69
	75.2°F (24°C)	62.6°F (17°C)	TC	13.65	13.44	13.23	12.30	11.90	12.21	12.99	12.63	13.67	13.33	11.73	9.70	5.62
			SC	9.37	9.23	9.08	8.44	8.17	8.38	8.92	8.67	9.38	9.15	8.05	6.66	3.85
			Input	0.25	0.30	0.36	0.35	0.37	0.49	0.60	0.71	1.01	1.22	1.10	1.08	0.70
	80.6°F (27°C)	66.2°F (19°C)	TC	14.72	14.51	14.30	13.37	12.97	13.28	14.06	13.70	14.74	14.40	12.80	10.77	6.68
			SC	9.90	9.76	9.62	8.99	8.72	8.93	9.46	9.22	9.91	9.69	8.61	7.24	4.50
			Input	0.27	0.32	0.37	0.37	0.38	0.51	0.61	0.72	1.03	1.23	1.12	1.10	0.72
	89.6°F (32°C)	73.4°F (23°C)	TC	16.73	16.52	16.31	15.38	14.98	15.29	16.07	15.72	16.75	16.41	14.81	12.78	8.70
			SC	10.23	10.10	9.97	9.40	9.16	9.35	9.83	9.61	10.24	10.04	9.06	7.81	5.32
			Input	0.30	0.35	0.40	0.40	0.41	0.54	0.64	0.75	1.06	1.27	1.15	1.13	0.75
18K (208-230V)	69.8°F (21°C)	59°F (15°C)	TC	19.68	19.17	18.67	17.08	17.39	17.95	16.75	12.38	16.82	16.19	14.66	10.42	7.58
			SC	14.77	14.40	14.02	12.25	12.39	12.63	12.34	10.41	12.37	12.16	11.41	9.47	7.43
			Input	0.47	0.54	0.61	0.72	0.72	0.74	0.93	0.77	1.47	1.73	1.88	1.47	1.36
	75.2°F (24°C)	62.6°F (17°C)	TC	21.33	20.82	20.32	18.73	19.04	19.60	18.40	14.03	18.47	17.84	16.31	12.07	9.23
			SC	15.31	14.95	14.58	13.45	13.67	14.07	13.21	10.07	13.26	12.80	11.70	8.67	6.62
			Input	0.51	0.58	0.65	0.76	0.76	0.78	0.97	0.81	1.51	1.77	1.92	1.51	1.40
	80.6°F (27°C)	66.2°F (19°C)	TC	22.85	22.35	21.85	20.26	20.57	21.13	19.93	15.56	20.00	19.37	17.83	13.60	10.75
			SC	15.86	15.51	15.16	14.06	14.28	14.67	13.83	10.80	13.88	13.44	12.38	9.44	7.47
			Input	0.56	0.63	0.70	0.81	0.81	0.83	1.01	0.86	1.56	1.82	1.97	1.56	1.44
	89.6°F (32°C)	73.4°F (23°C)	TC	25.72	25.21	24.71	23.12	23.43	23.99	22.79	18.42	22.86	22.23	20.70	16.46	13.62
			SC	15.84	15.53	15.22	14.24	14.43	14.78	14.04	11.35	14.08	13.69	12.75	10.14	8.39
			Input	0.64	0.71	0.79	0.89	0.89	0.92	1.10	0.94	1.64	1.90	2.05	1.64	1.53

Manufacturer reserves the right to change, at any time, specifications and designs without notice and without obligations.

HIGH WALL (Sheet 2 of 2)

MODEL	COOLING Indoor Conditions DB	WB		OUTDOOR CONDITIONS (DB) (-22°F) (-25°C)	-13°F (-25°C)	-4°F (-20°C)	0°F (-17°C)	5°F (-15°C)	17°F (-8°C)	47°F (8°C)	77°F (25°C)	86°F (30°C)	95°F (35°C)	104°F (40°C)	113°F (45°C)	122°F (50°C)
24K (208-230V)	69.8°F (21°C)	59°F (15°C)	TC	25.33	25.02	24.71	21.71	23.65	21.89	28.18	25.19	24.00	22.65	21.45	18.45	15.41
			SC	18.11	17.89	17.67	15.85	16.72	15.78	19.00	17.47	16.85	16.20	15.56	14.06	12.58
			Input	1.26	1.33	1.40	1.41	1.46	1.79	1.53	1.86	2.04	2.23	2.43	2.31	2.27
	75.2°F (24°C)	62.6°F (17°C)	TC	26.11	25.80	25.49	22.49	24.43	22.67	28.96	25.97	24.78	23.43	22.24	19.23	16.19
			SC	18.93	18.70	18.48	16.31	17.71	16.43	21.00	18.83	17.96	16.99	16.12	13.94	11.73
			Input	1.28	1.34	1.41	1.42	1.48	1.81	1.54	1.87	2.05	2.24	2.44	2.32	2.28
	80.6°F (27°C)	66.2°F (19°C)	TC	26.97	26.66	26.35	23.36	25.29	23.53	29.83	26.84	25.64	24.30	23.10	20.09	17.05
			SC	19.48	19.25	19.03	16.87	18.26	16.99	21.54	19.38	18.51	17.54	16.68	14.51	12.31
			Input	1.29	1.36	1.43	1.44	1.49	1.82	1.55	1.89	2.07	2.26	2.46	2.34	2.30
	89.6°F (32°C)	73.4°F (23°C)	TC	28.76	28.45	28.13	25.14	27.08	25.32	31.61	28.62	27.42	26.08	24.88	21.87	18.83
			SC	20.86	20.63	20.40	18.23	19.64	18.36	22.93	20.76	19.89	18.91	18.05	15.86	13.66
			Input	1.32	1.39	1.46	1.47	1.52	1.85	1.59	1.92	2.10	2.29	2.49	2.37	2.33
30K (208-230V)	69.8°F (21°C)	59°F (15°C)	TC	33.23	32.10	30.97	29.76	28.98	27.43	25.33	20.49	18.99	24.71	23.41	15.64	6.52
			SC	24.05	23.23	22.42	20.12	19.71	18.99	18.02	15.53	14.82	17.89	16.92	13.36	6.52
			Input	0.99	1.08	1.17	1.18	1.27	1.40	1.69	1.34	1.51	3.01	3.31	2.34	1.52
	75.2°F (24°C)	62.6°F (17°C)	TC	36.69	35.56	34.43	33.23	32.44	30.89	28.79	23.96	22.45	28.17	26.87	19.10	9.98
			SC	22.88	22.17	21.47	20.72	20.23	19.26	17.95	14.94	14.00	17.57	16.75	11.91	6.22
			Input	1.96	2.05	2.13	2.15	2.24	2.37	2.66	2.31	2.47	3.98	4.28	3.31	2.49
	80.6°F (27°C)	66.2°F (19°C)	TC	39.85	38.72	37.59	36.38	35.60	34.05	31.95	27.11	25.61	31.33	30.03	22.26	13.14
			SC	23.50	22.83	22.17	21.46	20.99	20.08	18.84	15.99	15.10	18.48	17.71	13.13	7.75
			Input	2.62	2.71	2.79	2.81	2.90	3.03	3.32	2.97	3.13	4.64	4.94	3.97	3.15
	89.6°F (32°C)	73.4°F (23°C)	TC	45.88	44.76	43.63	42.42	41.64	40.09	37.98	33.15	31.64	37.37	36.06	28.29	19.17
			SC	23.96	23.38	22.79	22.16	21.75	20.94	19.84	17.31	16.53	19.52	18.84	14.78	10.01
			Input	3.59	3.68	3.77	3.79	3.87	4.00	4.30	3.94	4.11	5.62	5.92	4.94	4.12
36K (208-230V)	69.8°F (21°C)	59°F (15°C)	TC	34.73	33.79	32.85	31.66	31.22	25.11	29.92	28.89	28.36	29.08	23.61	19.48	7.62
			SC	23.26	22.63	22.01	21.00	20.74	17.58	20.03	19.48	19.16	19.48	16.68	14.65	7.35
			Input	1.23	1.34	1.45	1.31	1.38	1.69	1.97	2.48	2.95	4.20	3.15	2.83	1.49
	75.2°F (24°C)	62.6°F (17°C)	TC	37.72	36.79	35.85	34.66	34.22	28.11	32.91	31.89	31.36	32.07	26.61	22.48	10.62
			SC	24.67	24.05	23.44	22.66	22.38	18.38	21.52	20.85	20.50	20.97	17.40	14.70	6.94
			Input	1.38	1.49	1.61	1.46	1.53	1.84	2.13	2.63	3.10	4.35	3.30	2.98	1.65
	80.6°F (27°C)	66.2°F (19°C)	TC	40.77	39.83	38.90	37.70	37.27	31.16	35.96	34.94	34.41	35.12	29.66	25.52	13.67
			SC	25.89	25.29	24.70	23.94	23.66	19.78	22.83	22.18	21.85	22.30	18.83	16.21	8.68
			Input	1.52	1.64	1.75	1.60	1.68	1.99	2.27	2.78	3.25	4.49	3.44	3.13	1.79
	89.6°F (32°C)	73.4°F (23°C)	TC	46.49	45.55	44.62	43.42	42.99	36.88	41.68	40.66	40.13	40.84	35.38	31.24	19.39
			SC	26.58	26.05	25.51	24.83	24.58	21.09	23.83	23.25	22.94	23.35	20.23	17.87	11.09
			Input	1.80	1.91	2.02	1.88	1.95	2.26	2.54	3.05	3.52	4.77	3.72	3.40	2.06

LEGEND

DB - Dry Bulb
WB - Wet Bulb
TC - Total Net Capacity (1000 Btu/hour)
SC - Sensible Capacity (1000 Btu/hour)
Input - Total Power (kW)

NOTE: Values in grey are extrapolated based on tested performance.

HEATING PERFORMANCE - HIGH WALL

HIGH WALL (Sheet 1 of 2)

MODEL	HEATING		OUTDOOR CONDITIONS (DB)											
	Indoor Conditions DB		-22°F (-30°C)	-13°F (-25°C)	-4°F (-20°C)	0°F (-17°C)	5°F (-15°C)	17°F (-8°C)	19.4°F (-7°C)	24.8°F (-4°C)	32°F (0°C)	39.2°F (4°C)	44.6°F (7°C)	53.6°F (12°C)
12K (115V)	59°F (15°C)	TC	3.46	4.48	5.65	6.48	6.98	9.23	9.60	10.32	12.25	13.45	13.28	13.57
		Input	0.66	0.72	0.78	0.81	0.84	0.94	0.96	0.98	1.11	1.19	1.08	1.06
		COP	1.53	1.82	2.11	2.35	2.45	2.89	2.94	3.10	3.25	3.30	3.59	3.75
	64.4°F (18°C)	TC	3.36	4.38	5.56	6.38	6.89	9.14	9.51	10.22	12.16	13.36	13.19	13.47
		Input	0.73	0.79	0.85	0.87	0.90	1.00	1.02	1.04	1.17	1.26	1.15	1.13
		COP	1.35	1.63	1.92	2.14	2.24	2.67	2.73	2.88	3.04	3.11	3.36	3.51
	69°F (20.5°C)	TC	3.28	4.30	5.48	6.30	6.81	9.06	9.43	10.14	12.08	13.28	13.11	13.39
		Input	0.66	0.72	0.78	0.81	0.84	0.94	0.96	0.98	1.11	1.19	1.08	1.06
		COP	1.53	1.82	2.11	2.35	2.45	2.89	2.94	3.10	3.25	3.30	3.59	3.75
	71.6°F (22°C)	TC	3.26	4.28	5.46	6.28	6.79	9.04	9.41	10.12	12.06	13.26	13.09	13.37
		Input	0.82	0.88	0.94	0.96	0.99	1.09	1.11	1.13	1.26	1.35	1.24	1.21
		COP	1.17	1.43	1.71	1.91	2.01	2.43	2.48	2.63	2.80	2.88	3.10	3.23
6K (208-230V)	59°F (15°C)	TC	4.24	5.47	7.12	8.05	8.19	10.71	10.98	11.79	11.67	12.57	12.46	13.40
		Input	0.77	0.84	0.95	1.01	0.98	1.11	1.14	1.18	1.05	1.09	1.02	1.04
		COP	1.61	1.91	2.20	2.33	2.45	2.82	2.83	2.93	3.25	3.39	3.57	3.77
	64.4°F (18°C)	TC	4.26	5.49	7.14	8.07	8.21	10.73	11.00	11.81	11.69	12.59	12.48	13.41
		Input	0.78	0.84	0.95	1.01	0.98	1.11	1.14	1.18	1.06	1.09	1.02	1.04
		COP	1.61	1.91	2.20	2.33	2.45	2.82	2.83	2.93	3.25	3.39	3.57	3.77
	69°F (20.5°C)	TC	4.28	5.51	7.15	8.08	8.22	10.75	11.02	11.82	11.71	12.60	12.49	13.43
		Input	0.78	0.84	0.95	1.01	0.98	1.12	1.14	1.18	1.06	1.09	1.03	1.04
		COP	1.61	1.91	2.21	2.34	2.45	2.82	2.83	2.93	3.25	3.39	3.57	3.77
	71.6°F (22°C)	TC	4.28	5.52	7.16	8.09	8.23	10.76	11.03	11.83	11.72	12.61	12.50	13.44
		Input	0.78	0.84	0.95	1.01	0.98	1.12	1.14	1.18	1.06	1.09	1.03	1.04
		COP	1.61	1.92	2.21	2.34	2.45	2.82	2.83	2.93	3.25	3.39	3.57	3.77
9K (208-230V)	59°F (15°C)	TC	5.58	7.48	9.57	10.94	11.85	14.20	14.69	14.87	15.40	18.62	15.32	14.72
		Input	1.28	1.39	1.44	1.49	1.53	1.69	1.74	1.78	1.81	2.04	1.35	1.14
		COP	1.28	1.58	1.94	2.15	2.27	2.46	2.48	2.44	2.50	2.67	3.31	3.78
	64.4°F (18°C)	TC	5.62	7.51	9.61	10.97	11.88	14.23	14.73	14.90	15.43	18.65	15.35	14.75
		Input	1.28	1.39	1.44	1.49	1.53	1.69	1.73	1.78	1.80	2.04	1.35	1.14
		COP	1.29	1.59	1.95	2.16	2.28	2.47	2.49	2.45	2.51	2.68	3.32	3.80
	69°F (20.5°C)	TC	5.64	7.54	9.64	11.00	11.91	14.26	14.75	14.93	15.46	18.68	15.38	14.78
		Input	1.28	1.39	1.44	1.49	1.53	1.69	1.73	1.78	1.80	2.04	1.35	1.14
		COP	1.30	1.59	1.96	2.17	2.29	2.47	2.49	2.46	2.51	2.68	3.33	3.81
	71.6°F (22°C)	TC	5.66	7.55	9.65	11.01	11.92	14.27	14.77	14.95	15.48	18.69	15.40	14.80
		Input	1.27	1.39	1.44	1.49	1.53	1.69	1.73	1.78	1.80	2.04	1.35	1.14
		COP	1.30	1.60	1.96	2.17	2.29	2.48	2.50	2.46	2.51	2.68	3.33	3.81
12K (208-230V)	59°F (15°C)	TC	6.58	8.18	10.15	11.59	12.16	13.77	14.16	14.98	16.54	16.71	14.12	14.36
		Input	1.41	1.54	1.65	1.73	1.76	1.64	1.69	1.77	1.84	1.89	1.35	1.11
		COP	1.37	1.55	1.81	1.97	2.03	2.46	2.46	2.48	2.64	2.59	3.06	3.79
	64.4°F (18°C)	TC	6.66	8.26	10.23	11.68	12.24	13.85	14.24	15.43	16.62	16.79	14.20	14.44
		Input	1.41	1.55	1.65	1.74	1.77	1.65	1.69	1.77	1.85	1.90	1.36	1.12
		COP	1.38	1.56	1.81	1.97	2.03	2.47	2.47	2.55	2.64	2.59	3.07	3.79
	69°F (20.5°C)	TC	6.73	8.33	10.30	11.74	12.31	13.92	14.31	15.50	16.69	16.86	14.27	14.51
		Input	1.42	1.55	1.66	1.74	1.77	1.65	1.70	1.78	1.85	1.91	1.36	1.12
		COP	1.39	1.57	1.82	1.98	2.04	2.47	2.47	2.55	2.64	2.59	3.07	3.79
	71.6°F (22°C)	TC	6.77	8.36	10.34	11.78	12.35	13.96	14.35	15.54	16.73	16.90	14.30	14.55
		Input	1.42	1.56	1.66	1.74	1.78	1.65	1.70	1.78	1.86	1.91	1.37	1.13
		COP	1.39	1.57	1.82	1.98	2.04	2.47	2.47	2.55	2.64	2.60	3.07	3.79
18K (208-230V)	59°F (15°C)	TC	11.34	13.58	15.44	16.62	17.80	18.01	23.46	24.84	23.15	21.30	21.96	22.42
		Input	1.92	2.24	2.49	2.74	2.60	2.49	3.34	3.21	2.73	1.95	1.93	1.79
		COP	1.73	1.77	1.82	1.78	2.04	2.08	2.06	2.27	2.49	3.21	3.34	3.68
	64.4°F (18°C)	TC	10.79	13.03	14.88	16.07	17.25	17.08	22.90	24.29	22.60	20.75	21.40	21.87
		Input	1.94	2.26	2.51	2.76	2.61	2.51	3.36	3.23	2.75	1.97	1.95	1.80
		COP	1.63	1.69	1.74	1.71	1.93	2.00	2.00	2.20	2.41	3.09	3.22	3.55
	69°F (20.5°C)	TC	10.19	12.56	14.41	15.60	16.78	16.61	22.43	23.82	22.13	20.28	20.93	21.40
		Input	1.95	2.30	2.54	2.79	2.64	2.52	3.34	3.21	2.73	1.95	1.93	1.79
		COP	1.53	1.60	1.66	1.64	1.86	1.92	2.06	2.27	2.49	3.21	3.34	3.68
	71.6°F (22°C)	TC	9.59	11.84	13.69	14.87	16.06	15.89	21.71	23.10	21.40	19.56	20.21	20.67
		Input	1.97	2.29	2.53	2.78	2.64	2.53	3.39	3.25	2.77	1.99	1.97	1.83
		COP	1.43	1.52	1.58	1.57	1.78	1.84	1.88	2.08	2.26	2.88	3.01	3.31

Manufacturer reserves the right to change, at any time, specifications and designs without notice and without obligations.

HIGH WALL (Sheet 2 of 2)

MODEL	HEATING		OUTDOOR CONDITIONS (DB)											
	Indoor Conditions DB		-22°F (-30°C)	-13°F (-25°C)	-4°F (-20°C)	0°F (-17°C)	5°F (-15°C)	17°F (-8°C)	19.4°F (-7°C)	24.8°F (-4°C)	32°F (0°C)	39.2°F (4°C)	44.6°F (7°C)	53.6°F (12°C)
24K (208-230V)	59°F (15°C)	TC	14.33	18.95	23.61	23.38	25.50	28.25	28.63	29.69	32.33	30.80	29.47	28.35
		Input	2.91	3.17	3.45	3.28	3.59	3.46	3.43	3.66	3.79	3.67	2.63	2.22
		COP	1.44	1.75	2.01	2.09	2.08	2.39	2.45	2.38	2.50	2.46	3.28	3.74
	64.4°F (18°C)	TC	14.33	18.94	23.61	23.38	25.50	28.25	28.62	29.69	32.33	30.79	29.47	28.35
		Input	2.91	3.16	3.45	3.27	3.59	3.46	3.43	3.66	3.79	3.66	2.63	2.22
		COP	1.44	1.75	2.01	2.09	2.08	2.39	2.45	2.38	2.50	2.46	3.28	3.74
	69°F (20.5°C)	TC	14.33	18.94	23.60	23.38	25.50	28.24	28.62	29.69	32.33	30.79	29.47	28.35
		Input	2.91	3.16	3.45	3.27	3.59	3.46	3.43	3.66	3.79	3.66	2.63	2.22
		COP	1.44	1.75	2.01	2.09	2.08	2.39	2.45	2.38	2.50	2.46	3.28	3.75
	71.6°F (22°C)	TC	14.33	18.94	23.60	23.37	25.50	28.24	28.62	29.69	32.33	30.79	29.47	28.35
		Input	2.91	3.16	3.44	3.27	3.59	3.46	3.43	3.66	3.79	3.66	2.63	2.22
		COP	1.44	1.75	2.01	2.09	2.08	2.39	2.45	2.38	2.50	2.46	3.28	3.75
30K (208-230V)	59°F (15°C)	TC	10.11	11.75	14.88	16.44	18.29	22.97	24.15	25.02	28.42	31.70	31.47	32.68
		Input	2.27	2.50	2.53	2.61	2.81	2.89	2.96	3.13	3.32	3.56	3.41	3.18
		COP	1.30	1.38	1.72	1.85	1.91	2.33	2.40	2.34	2.51	2.61	2.70	3.01
	64.4°F (18°C)	TC	10.30	11.93	15.07	16.63	18.48	23.16	24.34	25.21	28.61	31.89	31.66	32.87
		Input	2.29	2.51	2.54	2.62	2.82	2.90	2.97	3.14	3.34	3.57	3.43	3.19
		COP	1.32	1.39	1.74	1.86	1.92	2.34	2.40	2.35	2.51	2.62	2.71	3.02
	69°F (20.5°C)	TC	10.46	12.09	15.23	16.79	18.64	23.32	24.50	25.37	28.77	32.05	31.82	33.03
		Input	2.30	2.52	2.55	2.64	2.84	2.91	2.98	3.15	3.35	3.58	3.44	3.21
		COP	1.33	1.41	1.75	1.87	1.93	2.35	2.41	2.36	2.52	2.62	2.71	3.02
	71.6°F (22°C)	TC	10.55	12.18	15.32	16.88	18.73	23.41	24.59	25.46	28.86	32.14	31.91	33.12
		Input	2.30	2.53	2.56	2.64	2.84	2.92	2.99	3.16	3.36	3.59	3.44	3.21
		COP	1.34	1.41	1.75	1.87	1.93	2.35	2.41	2.36	2.52	2.62	2.72	3.02
36K (208-230V)	59°F (15°C)	TC	13.15	15.06	18.36	21.14	23.41	23.64	24.90	26.17	27.86	32.56	29.75	32.76
		Input	2.86	3.08	3.29	3.47	3.61	3.57	3.64	3.70	3.73	4.14	3.81	3.48
		COP	1.35	1.44	1.64	1.79	1.90	1.94	2.01	2.07	2.19	2.31	2.29	2.76
	64.4°F (18°C)	TC	13.64	15.56	18.85	21.64	23.91	24.14	25.40	26.67	28.35	33.06	30.25	33.25
		Input	1.69	1.78	1.98	2.13	2.24	2.28	2.35	4.04	4.07	4.48	4.16	3.82
		COP	2.37	2.55	2.78	2.97	3.12	3.10	3.17	1.93	2.04	2.16	2.13	2.55
	69°F (20.5°C)	TC	13.64	15.98	19.28	22.06	24.34	24.56	25.83	27.09	28.78	33.48	30.67	33.68
		Input	1.35	1.44	1.64	1.79	1.90	1.94	2.01	3.70	3.73	4.14	3.81	3.48
		COP	2.86	3.08	3.29	3.47	3.61	3.57	3.64	2.07	2.19	2.31	2.29	2.76
	71.6°F (22°C)	TC	15.80	17.71	21.01	23.79	26.07	26.30	27.56	28.83	30.51	35.22	32.41	35.41
		Input	3.67	3.88	4.09	4.27	4.41	4.37	2.81	4.50	4.53	4.94	4.62	4.28
		COP	1.26	1.34	1.50	1.63	1.73	1.76	2.87	1.88	1.97	2.09	2.06	2.42

LEGEND

DB - Dry Bulb
TC - Total Net Capacity (1000 Btu/hour)
Input - Total Power (kW)
COP - W/W

Manufacturer reserves the right to change, at any time, specifications and designs without notice and without obligations.

COOLING PERFORMANCE - CASSETTE

MODEL	COOLING INDOOR CONDITIONS DB	WB		OUTDOOR CONDITIONS (DB) (-22°F) (-25°C)	-13°F (-25°C)	-4°F (-20°C)	0°F (-17°C)	5°F (-15°C)	17°F (-8°C)	47°F (8°C)	77°F (25°C)	86°F (30°C)	95°F (35°C)	104°F (40°C)	113°F (45°C)	122°F (50°C)
9K	69.8°F (21°C)	59F° (15°C)	TC	7.61	7.71	7.81	7.91	6.60	6.39	9.78	10.52	10.84	11.03	9.63	8.41	4.89
			SC	5.44	5.51	5.58	6.14	5.27	5.08	7.10	7.62	7.79	7.88	7.20	6.58	4.89
			Input	0.01	0.07	0.13	0.17	0.14	0.14	0.46	0.72	0.90	0.92	1.07	1.05	0.37
	75.2°F (24°C)	62.6°F (17°C)	TC	7.69	7.79	7.89	7.98	6.68	6.47	9.86	10.60	10.92	11.11	9.71	8.49	4.97
			SC	5.75	5.83	5.90	5.97	5.00	4.84	7.38	7.93	8.17	8.31	7.26	6.35	3.72
			Input	0.14	0.20	0.26	0.30	0.26	0.27	0.58	0.85	1.03	1.05	1.20	1.18	0.50
	80.6°F (27°C)	66.2°F (19°C)	TC	8.31	8.41	8.51	8.61	7.31	7.09	10.49	11.22	11.54	11.73	10.33	9.11	5.59
			SC	6.23	6.30	6.38	6.45	5.47	5.31	7.86	8.41	8.65	8.79	7.74	6.83	4.19
			Input	0.22	0.28	0.34	0.38	0.35	0.35	0.67	0.93	1.11	1.13	1.28	1.26	0.58
	89.6°F (32°C)	73.4°F (23°C)	TC	9.77	9.87	9.97	10.06	8.76	8.54	11.94	12.68	13.00	13.19	11.79	10.56	7.05
			SC	6.84	6.91	6.98	7.05	6.14	5.99	8.37	8.88	9.11	9.24	8.26	7.40	4.94
			Input	0.40	0.45	0.51	0.55	0.52	0.53	0.84	1.11	1.29	1.30	1.46	1.43	0.76
12K	69.8°F (21°C)	59°F (15°C)	TC	13.83	13.58	13.33	11.49	12.42	13.16	12.03	12.24	13.53	13.45	11.16	9.27	4.84
			SC	9.83	9.65	9.47	8.42	9.12	9.43	8.88	8.98	9.58	9.55	8.42	7.59	4.84
			Input	0.36	0.40	0.45	0.39	0.54	0.57	0.62	0.73	1.06	1.26	1.15	1.12	0.70
	75.2°F (24°C)	62.6°F (17°C)	TC	15.08	14.83	14.58	12.73	13.66	14.40	13.27	13.48	14.77	14.69	12.41	10.52	6.09
			SC	10.64	10.47	10.29	8.99	9.64	10.17	9.37	9.52	10.43	10.37	8.76	7.42	4.30
			Input	0.37	0.41	0.46	0.40	0.55	0.58	0.63	0.73	1.07	1.27	1.16	1.12	0.71
	80.6°F (27°C)	66.2°F (19°C)	TC	16.28	16.03	15.78	13.94	14.87	15.61	14.48	14.69	15.97	15.90	13.61	11.72	7.29
			SC	11.23	11.06	10.89	9.62	10.26	10.77	9.99	10.13	11.02	10.97	9.39	8.09	5.03
			Input	0.38	0.43	0.47	0.42	0.56	0.59	0.64	0.75	1.08	1.29	1.18	1.14	0.73
	89.6°F (32°C)	73.4°F (23°C)	TC	18.61	18.36	18.11	16.27	17.20	17.94	16.81	17.02	18.30	18.23	15.94	14.05	9.62
			SC	12.90	12.73	12.55	11.28	11.92	12.43	11.65	11.80	12.69	12.63	11.05	9.74	6.67
			Input	0.41	0.45	0.50	0.44	0.59	0.62	0.67	0.78	1.11	1.31	1.20	1.17	0.75
18K	69.8°F (21°C)	59°F (15°C)	TC	18.20	17.71	17.21	15.56	15.71	16.44	14.63	14.92	14.78	14.36	11.25	9.23	6.66
			SC	13.65	13.28	12.91	11.23	11.45	11.80	10.73	10.84	10.79	10.77	9.42	8.65	6.65
			Input	0.50	0.56	0.62	0.68	0.70	0.63	0.84	1.36	1.32	1.55	1.33	1.32	1.23
	75.2°F (24°C)	62.6°F (17°C)	TC	19.82	19.33	18.84	17.18	17.33	18.06	16.25	16.54	16.40	15.98	12.87	10.85	8.28
			SC	14.85	14.48	14.11	12.88	12.98	13.53	12.18	12.39	12.29	11.97	9.64	8.13	6.21
			Input	0.55	0.61	0.67	0.73	0.74	0.68	0.89	1.40	1.37	1.60	1.38	1.36	1.28
	80.6°F (27°C)	66.2°F (19°C)	TC	21.39	20.90	20.41	18.75	18.90	19.63	17.82	18.11	17.97	17.55	14.44	12.42	9.85
			SC	15.72	15.36	15.00	13.79	13.89	14.43	13.10	13.31	13.21	12.90	10.61	9.13	7.24
			Input	0.60	0.66	0.72	0.77	0.79	0.72	0.93	1.45	1.41	1.64	1.42	1.41	1.32
	89.6°F (32°C)	73.4°F (23°C)	TC	24.33	23.84	23.34	21.69	21.83	22.57	20.76	21.05	20.91	20.49	17.38	15.36	12.79
			SC	16.11	15.78	15.46	14.36	14.46	14.94	13.75	13.94	13.85	13.57	11.51	10.17	8.47
			Input	0.67	0.73	0.79	0.85	0.87	0.80	1.01	1.53	1.49	1.72	1.50	1.49	1.40
24K	69.8°F (21°C)	59°F (15°C)	TC	23.15	23.07	22.99	22.21	21.68	21.47	23.77	26.21	24.98	23.18	21.89	19.58	18.65
			SC	16.32	16.26	16.21	15.94	15.34	15.32	16.69	17.91	17.27	16.34	15.74	14.41	14.17
			Input	1.88	1.90	1.92	2.06	2.05	2.06	1.89	1.66	1.74	2.03	2.21	2.31	2.54
	75.2°F (24°C)	62.6°F (17°C)	TC	21.04	20.96	20.88	20.10	19.57	19.36	21.66	24.10	22.87	21.07	19.78	17.47	16.54
			SC	15.87	15.81	15.75	15.16	14.76	14.61	16.34	18.18	17.25	15.90	14.92	13.18	12.48
			Input	2.27	2.29	2.31	2.45	2.44	2.45	2.28	2.05	2.12	2.41	2.59	2.70	2.93
	80.6°F (27°C)	66.2°F (19°C)	TC	21.23	21.14	21.06	20.28	19.75	19.54	21.84	24.28	23.05	21.26	19.96	17.65	16.72
			SC	16.20	16.14	16.07	15.48	15.07	14.91	16.67	18.53	17.59	16.22	15.23	13.47	12.76
			Input	2.47	2.48	2.50	2.64	2.63	2.64	2.47	2.25	2.32	2.61	2.79	2.89	3.12
	89.6°F (32°C)	73.4°F (23°C)	TC	22.04	21.96	21.88	21.10	20.56	20.36	22.66	25.10	23.87	22.07	20.78	18.46	17.54
			SC	16.04	15.98	15.92	15.35	14.97	14.82	16.49	18.27	17.37	16.06	15.12	13.44	12.76

LEGEND

DB - Dry Bulb
WB - Wet Bulb
TC - Total Net Capacity (1000 Btu/hour)
SC - Sensible Capacity (1000 Btu/hour)
Input - Total Power (kW)

NOTE: Values in grey are extrapolated based on tested performance.

HEATING PERFORMANCE - CASSETTE

MODEL	HEATING		OUTDOOR CONDITIONS (DB)											
	Indoor Conditions DB		-22°F (-30°C)	-13°F (-25°C)	-4°F (-20°C)	0°F (-17°C)	5°F (-15°C)	17°F (-8°C)	19.4°F (-7°C)	24.8°F (-4°C)	32°F (0°C)	39.2°F (4°C)	44.6°F (7°C)	53.6°F (12°C)
9K	59°F (15°C)	TC	5.23	7.65	9.31	10.43	11.52	13.72	14.05	13.97	15.75	18.01	15.06	14.69
		Input	1.32	1.42	1.54	1.67	1.73	1.98	1.93	2.08	1.97	2.28	1.43	1.17
		COP	1.17	1.58	1.78	1.83	1.95	2.03	2.13	1.97	2.35	2.32	3.08	3.68
	64.4°F (18°C)	TC	5.22	7.64	9.30	10.42	11.51	13.71	14.04	13.96	15.74	18.00	15.05	14.68
		Input	1.35	1.45	1.57	1.70	1.76	2.01	1.96	2.11	2.00	2.31	1.47	1.20
		COP	1.13	1.54	1.74	1.80	1.91	2.00	2.10	1.94	2.31	2.29	3.01	3.58
	69°F (20.5°C)	TC	5.22	7.63	9.29	10.41	11.51	13.70	14.04	13.96	15.74	17.99	15.04	14.68
		Input	1.32	1.42	1.54	1.67	1.73	1.98	1.93	2.08	1.97	2.28	1.43	1.17
		COP	1.17	1.58	1.78	1.83	1.95	2.03	2.13	1.97	2.35	2.32	3.08	3.68
	71.6°F (22°C)	TC	4.25	6.66	8.32	9.44	10.53	12.73	13.07	12.99	14.77	17.02	14.07	13.70
		Input	1.39	1.50	1.61	1.74	1.81	2.06	2.01	2.15	2.04	2.35	1.51	1.25
		COP	0.89	1.30	1.51	1.59	1.71	1.81	1.91	1.77	2.12	2.12	2.73	3.22
12K	59°F (15°C)	TC	5.75	8.02	9.96	11.17	11.99	14.26	13.53	14.87	16.33	17.70	14.30	16.01
		Input	1.46	1.52	1.67	1.72	1.74	1.72	1.63	1.72	1.72	1.76	1.22	1.25
		COP	1.16	1.55	1.75	1.91	2.02	2.44	2.43	2.53	2.77	2.95	3.43	3.74
	64.4°F (18°C)	TC	5.81	8.08	10.02	11.23	12.05	14.32	13.58	14.93	16.39	17.76	14.36	16.07
		Input	1.46	1.52	1.67	1.72	1.74	1.72	1.63	1.72	1.72	1.76	1.22	1.25
		COP	1.17	1.56	1.76	1.92	2.03	2.45	2.44	2.54	2.78	2.96	3.44	3.75
	69°F (20.5°C)	TC	5.86	8.13	10.07	11.28	12.10	14.37	13.63	14.98	16.44	17.81	14.41	16.12
		Input	1.46	1.52	1.67	1.72	1.74	1.72	1.64	1.72	1.73	1.76	1.22	1.26
		COP	1.18	1.57	1.77	1.92	2.04	2.45	2.44	2.55	2.79	2.97	3.45	3.76
	71.6°F (22°C)	TC	5.89	8.16	10.10	11.31	12.13	14.40	13.66	15.01	16.46	17.84	14.44	16.15
		Input	1.46	1.52	1.67	1.72	1.74	1.72	1.64	1.72	1.73	1.76	1.22	1.26
		COP	1.18	1.58	1.77	1.93	2.05	2.46	2.45	2.55	2.80	2.97	3.46	3.77
18K	59°F (15°C)	TC	10.73	13.19	16.59	16.99	18.75	22.87	20.72	24.93	21.75	23.38	22.11	22.72
		Input	1.98	2.34	2.62	2.58	2.84	3.15	3.05	3.27	2.45	2.31	1.96	1.76
		COP	1.58	1.65	1.85	1.93	1.93	2.13	1.99	2.23	2.61	2.96	3.31	3.78
	64.4°F (18°C)	TC	10.16	12.62	16.03	16.43	18.18	22.30	20.15	24.36	21.19	22.82	21.54	22.15
		Input	1.97	2.32	2.61	2.56	2.82	3.13	3.03	3.25	2.43	2.30	1.94	1.79
		COP	1.51	1.60	1.80	1.88	1.89	2.09	1.95	2.19	2.56	2.91	3.25	3.62
	69°F (20.5°C)	TC	9.68	12.14	15.54	15.94	17.70	21.82	19.67	23.88	20.70	22.33	21.06	21.67
		Input	1.95	2.31	2.59	2.55	2.81	3.12	3.02	3.24	2.41	2.28	1.93	1.76
		COP	1.45	1.54	1.76	1.84	1.85	2.05	1.91	2.16	2.51	2.87	3.20	3.78
	71.6°F (22°C)	TC	9.41	11.87	15.27	15.67	17.42	21.54	19.39	23.61	20.43	22.06	20.79	21.46
		Input	1.95	2.30	2.58	2.54	2.80	3.11	3.01	3.23	2.41	2.27	1.92	1.84
		COP	1.42	1.51	1.73	1.81	1.82	2.03	1.89	2.14	2.49	2.84	3.18	3.42
24K	59°F (15°C)	TC	14.80	18.20	23.64	24.95	26.50	26.55	26.91	30.53	34.20	33.37	30.87	30.94
		Input	2.83	3.33	3.60	3.50	3.64	3.26	3.29	3.62	3.75	3.46	2.54	2.19
		COP	1.53	1.60	1.93	2.09	2.13	2.39	2.39	2.47	2.68	2.83	3.56	4.14
	64.4°F (18°C)	TC	14.89	18.30	23.74	25.04	26.59	26.64	27.00	30.62	34.29	33.47	30.96	31.04
		Input	2.90	3.40	3.67	3.57	3.71	3.33	3.37	3.69	3.82	3.53	2.61	2.26
		COP	1.51	1.58	1.90	2.05	2.10	2.34	2.35	2.43	2.63	2.78	3.48	4.02
	69°F (20.5°C)	TC	14.97	18.37	23.81	25.12	26.67	26.72	27.08	30.70	34.37	33.54	31.04	31.12
		Input	2.83	3.33	3.60	3.50	3.64	3.26	3.29	3.62	3.75	3.46	2.54	2.19
		COP	1.53	1.60	1.93	2.09	2.13	2.39	2.39	2.47	2.68	2.83	3.56	4.14
	71.6°F (22°C)	TC	11.94	15.34	20.78	22.09	23.63	23.69	24.05	27.66	31.33	30.51	28.01	28.08
		Input	2.99	3.49	3.76	3.67	3.80	3.43	3.46	3.79	3.91	3.63	2.71	2.36
		COP	1.17	1.29	1.62	1.76	1.82	2.03	2.04	2.14	2.35	2.47	3.03	3.49

LEGEND

DB - Dry Bulb
TC - Total Net Capacity (1000 Btu/hour)
Input - Total Power (kW)
COP - W/W

Manufacturer reserves the right to change, at any time, specifications and designs without notice and without obligations.

COOLING PERFORMANCE ONE-WAY CASSETTE

One-Way Cassette (Sheet 1 of 4)

6K COOLING PERFORMANCE

AIRFLOW (CFM)	OUTDOOR DB (°F)	ID WB (°F)	60.8				64.4				66.2				71.6			
		ID DB (°F)	73.4	77.0	80.6	84.2	73.4	77.0	80.6	84.2	73.4	77.0	80.6	84.2	73.4	77.0	80.6	84.2
489	-22	TC	6655	6664	6671	6680	7055	7063	7071	7080	7476	7486	7496	8003	8015	8026	8038	8050
		S/T	0.40	0.45	0.53	0.60	0.42	0.48	0.56	0.64	0.45	0.51	0.59	0.68	0.77	0.88	0.91	0.91
		PI	0.57	0.57	0.57	0.57	0.60	0.60	0.60	0.60	0.64	0.64	0.64	0.67	0.67	0.67	0.68	0.68
	-10	TC	7406	6664	7425	7435	7851	7861	7870	7879	8321	8331	8342	8850	8862	8872	8884	8896
		S/T	0.40	0.45	0.53	0.61	0.42	0.48	0.56	0.64	0.45	0.51	0.60	0.68	0.78	0.89	0.91	0.91
		PI	0.56	0.56	0.56	0.56	0.59	0.59	0.59	0.59	0.63	0.63	0.63	0.66	0.66	0.67	0.67	0.67
	0	TC	8033	6664	8053	8063	8516	8526	8536	8546	9024	9036	9048	9555	9568	9578	9590	9602
		S/T	0.40	0.46	0.53	0.61	0.43	0.48	0.57	0.65	0.45	0.51	0.60	0.69	0.78	0.89	0.91	0.91
		PI	0.55	0.55	0.55	0.55	0.59	0.59	0.59	0.59	0.62	0.62	0.62	0.66	0.66	0.66	0.66	0.66
	5	TC	8346	6664	8367	8378	8848	8858	8869	8879	9376	9388	9401	9908	9920	9931	9943	9955
		S/T	0.40	0.46	0.54	0.61	0.43	0.49	0.57	0.65	0.45	0.52	0.60	0.69	0.78	0.89	0.91	0.91
		PI	0.55	0.55	0.55	0.55	0.58	0.58	0.58	0.58	0.62	0.62	0.62	0.65	0.65	0.65	0.66	0.66
	14	TC	8910	6664	8932	8944	9445	9456	9468	9479	10010	10023	10036	10543	10556	10566	10578	10590
		S/T	0.40	0.46	0.54	0.61	0.43	0.49	0.57	0.65	0.45	0.52	0.61	0.69	0.79	0.90	0.91	0.91
		PI	0.54	0.54	0.55	0.55	0.58	0.58	0.58	0.58	0.61	0.61	0.61	0.65	0.65	0.65	0.65	0.65
	23	TC	9098	6664	9120	9132	9644	9656	9667	9679	10221	10234	10247	10755	10767	10778	10790	10801
		S/T	0.41	0.46	0.54	0.62	0.43	0.49	0.57	0.65	0.46	0.52	0.61	0.69	0.79	0.90	0.91	0.91
		PI	0.58	0.58	0.58	0.58	0.61	0.61	0.61	0.62	0.65	0.65	0.65	0.69	0.69	0.69	0.69	0.69
	32	TC	9132	6664	9154	9166	9680	9692	9703	9715	10259	10272	10285	10793	10805	10816	10828	10840
		S/T	0.41	0.47	0.54	0.62	0.43	0.49	0.58	0.66	0.46	0.52	0.61	0.70	0.80	0.91	0.91	0.91
		PI	0.63	0.63	0.63	0.63	0.67	0.67	0.67	0.67	0.71	0.71	0.71	0.75	0.75	0.75	0.75	0.76
	41	TC	8783	6664	8804	8816	9311	9322	9333	9344	9867	9880	9893	10400	10413	10423	10435	10447
		S/T	0.41	0.47	0.55	0.62	0.44	0.50	0.58	0.66	0.46	0.53	0.61	0.70	0.80	0.91	0.91	0.91
		PI	0.50	0.50	0.51	0.51	0.53	0.54	0.54	0.54	0.57	0.57	0.57	0.60	0.60	0.60	0.60	0.60
	50	TC	8481	6664	8501	8513	8990	9001	9012	9022	9527	9540	9552	10060	10072	10083	10094	10106
		S/T	0.41	0.47	0.55	0.63	0.44	0.50	0.58	0.66	0.46	0.53	0.62	0.70	0.80	0.91	0.91	0.91
		PI	0.37	0.37	0.37	0.37	0.39	0.39	0.39	0.39	0.41	0.41	0.41	0.44	0.44	0.44	0.44	0.44
	59	TC	8640	6664	8662	8673	9160	9171	9181	9192	9707	9720	9732	10240	10252	10263	10274	10286
		S/T	0.41	0.47	0.55	0.63	0.44	0.50	0.59	0.67	0.47	0.53	0.62	0.71	0.81	0.91	0.91	0.91
		PI	0.39	0.39	0.39	0.39	0.42	0.42	0.42	0.42	0.44	0.44	0.44	0.47	0.47	0.47	0.47	0.47
	68	TC	8800	6664	8822	8834	9329	9340	9351	9362	9887	9899	9912	10420	10432	10443	10454	10466
		S/T	0.42	0.47	0.56	0.63	0.44	0.50	0.59	0.67	0.47	0.53	0.62	0.71	0.81	0.91	0.91	0.91
		PI	0.42	0.42	0.42	0.42	0.44	0.44	0.44	0.45	0.47	0.47	0.47	0.50	0.50	0.50	0.50	0.50
	77	TC	8960	6664	8982	8994	9498	9510	9521	9532	10066	10079	10092	10600	10612	10623	10634	10646
		S/T	0.43	0.49	0.57	0.65	0.45	0.52	0.60	0.69	0.48	0.55	0.64	0.73	0.83	0.95	1.00	1.00
		PI	0.44	0.45	0.45	0.45	0.47	0.47	0.47	0.47	0.50	0.50	0.50	0.53	0.53	0.53	0.53	0.53
	86	TC	8098	6664	8118	8129	8585	8595	8605	8615	9098	9110	9122	9629	9641	9652	9664	9676
		S/T	0.43	0.49	0.58	0.66	0.46	0.52	0.61	0.70	0.49	0.56	0.65	0.74	0.84	0.96	1.00	1.00
		PI	0.66	0.66	0.66	0.66	0.69	0.70	0.70	0.70	0.74	0.74	0.74	0.78	0.78	0.78	0.78	0.78
	95	TC	8022	6664	8042	8053	8504	8514	8524	8535	9013	9024	9036	9543	9556	9566	9578	9590
		S/T	0.44	0.51	0.59	0.68	0.47	0.54	0.63	0.72	0.50	0.57	0.67	0.76	0.87	0.99	1.00	1.00
		PI	0.72	0.73	0.73	0.73	0.77	0.77	0.77	0.77	0.81	0.81	0.82	0.86	0.86	0.86	0.86	0.87
	104	TC	7337	6664	7355	7365	7778	7788	7797	7806	8243	8254	8265	8772	8784	8795	8807	8819
		S/T	0.47	0.53	0.62	0.71	0.49	0.56	0.66	0.75	0.52	0.60	0.70	0.80	0.91	1.00	1.00	1.00
		PI	0.75	0.75	0.75	0.75	0.79	0.79	0.80	0.80	0.84	0.84	0.84	0.89	0.89	0.89	0.89	0.89
	114.8	TC	6711	6664	6727	6737	7114	7123	7131	7140	7539	7549	7559	8066	8079	8089	8101	8113
		S/T	0.47	0.54	0.63	0.72	0.50	0.57	0.67	0.76	0.53	0.60	0.71	0.81	0.92	1.00	1.00	1.00
		PI	0.77	0.78	0.78	0.78	0.82	0.82	0.82	0.82	0.87	0.87	0.87	0.92	0.92	0.92	0.92	0.92
	122	TC	6138	6664	6153	6161	6507	6515	6522	6530	6896	6905	6914	7470	7484	7495	7508	7521
		S/T	0.49	0.56	0.65	0.74	0.52	0.59	0.69	0.79	0.55	0.63	0.73	0.83	0.95	1.00	1.00	1.00
		PI	0.80	0.80	0.80	0.80	0.85	0.85	0.85	0.85	0.90	0.90	0.90	0.95	0.95	0.96	0.96	0.96

Manufacturer reserves the right to change, at any time, specifications and designs without notice and without obligations.

One-Way Cassette (Sheet 2 of 4)

6K COOLING PERFORMANCE

AIRFLOW (CFM)	OUTDOOR DB (°F)	ID WB (°F)	60.8				64.4				66.2				71.6			
		ID DB (°F)	73.4	77.0	80.6	84.2	73.4	77.0	80.6	84.2	73.4	77.0	80.6	84.2	73.4	77.0	80.6	84.2
530	-22	TC	7008	6664	7025	7035	7425	7436	7447	7458	7967	7980	7992	8533	8546	8558	8570	8583
		S/T	0.43	0.50	0.58	0.66	0.46	0.52	0.61	0.70	0.49	0.56	0.65	0.74	0.85	0.96	1.00	1.00
		PI	0.62	0.62	0.62	0.62	0.65	0.65	0.66	0.66	0.69	0.69	0.69	0.73	0.73	0.74	0.74	0.74
	-10	TC	7858	6664	7877	7888	8328	8339	8350	8360	8870	8882	8895	9436	9449	9460	9473	9486
		S/T	0.44	0.50	0.58	0.66	0.46	0.53	0.62	0.70	0.49	0.56	0.66	0.75	0.85	0.97	1.00	1.00
		PI	0.61	0.61	0.61	0.61	0.65	0.65	0.65	0.65	0.68	0.68	0.69	0.72	0.73	0.73	0.73	0.73
	0	TC	8566	6664	8587	8598	9080	9091	9102	9113	9622	9635	9647	10188	10202	10213	10225	10238
		S/T	0.44	0.50	0.59	0.67	0.47	0.53	0.62	0.71	0.49	0.56	0.66	0.75	0.86	0.98	1.00	1.00
		PI	0.60	0.60	0.60	0.60	0.64	0.64	0.64	0.64	0.68	0.68	0.68	0.72	0.72	0.72	0.72	0.72
	5	TC	8920	6664	8942	8954	9457	9467	9478	9489	9999	10011	10024	10565	10578	10589	10602	10614
		S/T	0.44	0.50	0.59	0.67	0.47	0.53	0.62	0.71	0.50	0.56	0.66	0.75	0.86	0.98	1.00	1.00
		PI	0.60	0.60	0.60	0.60	0.64	0.64	0.64	0.64	0.67	0.67	0.67	0.71	0.71	0.71	0.72	0.72
	14	TC	9557	6664	9580	9593	10134	10145	10155	10166	10676	10688	10701	11242	11255	11266	11279	11291
		S/T	0.44	0.51	0.59	0.67	0.47	0.54	0.63	0.71	0.50	0.57	0.66	0.76	0.86	0.98	1.00	1.00
		PI	0.59	0.59	0.59	0.60	0.63	0.63	0.63	0.63	0.67	0.67	0.67	0.71	0.71	0.71	0.71	0.71
	23	TC	9769	6664	9793	9807	10359	10370	10381	10392	10901	10914	10926	11467	11481	11492	11504	11517
		S/T	0.45	0.51	0.59	0.68	0.47	0.54	0.63	0.72	0.50	0.57	0.67	0.76	0.87	0.99	1.00	1.00
		PI	0.63	0.63	0.63	0.63	0.67	0.67	0.67	0.67	0.71	0.71	0.71	0.75	0.75	0.75	0.75	0.75
	32	TC	9808	6664	9832	9845	10400	10411	10422	10432	10942	10955	10967	11508	11521	11532	11545	11558
		S/T	0.45	0.51	0.60	0.68	0.47	0.54	0.63	0.72	0.50	0.57	0.67	0.76	0.87	0.99	1.00	1.00
		PI	0.69	0.69	0.69	0.69	0.73	0.73	0.73	0.73	0.77	0.78	0.78	0.82	0.82	0.82	0.82	0.82
	41	TC	9413	6664	9437	9449	9981	9992	10003	10014	10523	10536	10548	11089	11102	11114	11126	11139
		S/T	0.45	0.51	0.60	0.68	0.48	0.54	0.64	0.72	0.51	0.58	0.67	0.77	0.88	1.00	1.00	1.00
		PI	0.55	0.55	0.55	0.55	0.58	0.58	0.58	0.59	0.62	0.62	0.62	0.65	0.66	0.66	0.66	0.66
	50	TC	9072	6664	9094	9106	9618	9629	9640	9651	10160	10173	10185	10726	10739	10751	10763	10776
		S/T	0.45	0.52	0.60	0.69	0.48	0.55	0.64	0.73	0.51	0.58	0.68	0.77	0.88	1.00	1.00	1.00
		PI	0.40	0.40	0.40	0.40	0.42	0.42	0.43	0.43	0.45	0.45	0.45	0.48	0.48	0.48	0.48	0.48
	59	TC	9252	6664	9275	9288	9810	9821	9832	9843	10352	10365	10377	10918	10931	10943	10955	10968
		S/T	0.45	0.52	0.61	0.69	0.48	0.55	0.64	0.73	0.51	0.58	0.68	0.78	0.88	1.00	1.00	1.00
		PI	0.43	0.43	0.43	0.43	0.45	0.45	0.46	0.46	0.48	0.48	0.48	0.51	0.51	0.51	0.51	0.51
	68	TC	9433	6664	9456	9469	10002	10013	10024	10034	10544	10557	10569	11110	11123	11134	11147	11160
		S/T	0.46	0.52	0.61	0.69	0.48	0.55	0.65	0.74	0.51	0.58	0.68	0.78	0.89	1.00	1.00	1.00
		PI	0.46	0.46	0.46	0.46	0.48	0.48	0.49	0.49	0.51	0.51	0.51	0.54	0.54	0.54	0.55	0.55
	77	TC	9614	6664	9637	9650	10194	10205	10216	10226	10736	10748	10761	11302	11315	11326	11339	11352
		S/T	0.47	0.53	0.63	0.71	0.50	0.57	0.66	0.76	0.53	0.60	0.70	0.80	0.91	1.00	1.00	1.00
		PI	0.49	0.49	0.49	0.49	0.51	0.51	0.52	0.52	0.55	0.55	0.55	0.58	0.58	0.58	0.58	0.58
	86	TC	8640	6664	8661	8673	9159	9170	9181	9191	9701	9713	9726	10267	10280	10291	10304	10317
		S/T	0.47	0.54	0.63	0.72	0.50	0.57	0.67	0.77	0.53	0.61	0.71	0.81	0.92	1.00	1.00	1.00
		PI	0.71	0.72	0.72	0.72	0.76	0.76	0.76	0.76	0.80	0.80	0.81	0.85	0.85	0.85	0.85	0.85
	95	TC	8554	6664	8575	8586	9068	9079	9089	9100	9610	9622	9635	10176	10189	10200	10213	10225
		S/T	0.49	0.56	0.65	0.74	0.52	0.59	0.69	0.78	0.55	0.62	0.73	0.83	0.95	1.00	1.00	1.00
		PI	0.79	0.79	0.79	0.79	0.84	0.84	0.84	0.84	0.89	0.89	0.89	0.94	0.94	0.94	0.94	0.94
	104	TC	7780	6664	7799	7809	8245	8256	8267	8278	8787	8800	8812	9353	9366	9378	9390	9403
		S/T	0.51	0.58	0.68	0.78	0.54	0.62	0.72	0.82	0.57	0.66	0.77	0.87	1.00	1.00	1.00	1.00
		PI	0.82	0.82	0.82	0.82	0.87	0.87	0.87	0.87	0.92	0.92	0.92	0.97	0.97	0.97	0.97	0.97
	114.8	TC	7072	6664	7089	7099	7493	7504	7514	7525	8035	8047	8060	8601	8614	8625	8638	8651
		S/T	0.52	0.59	0.69	0.79	0.55	0.63	0.73	0.83	0.58	0.66	0.78	0.88	1.00	1.00	1.00	1.00
		PI	0.84	0.85	0.85	0.85	0.90	0.90	0.90	0.90	0.95	0.95	0.95	1.00	1.00	1.00	1.00	1.00
	122	TC	6375	6664	6391	6399	6750	6762	6774	6786	7344	7358	7372	7965	7979	7992	8005	8019
		S/T	0.54	0.61	0.71	0.81	0.57	0.65	0.76	0.86	0.60	0.69	0.80	0.92	1.00	1.00	1.00	1.00
		PI	0.87	0.87	0.88	0.88	0.93	0.93	0.93	0.93	0.98	0.98	0.98	1.04	1.04	1.04	1.04	1.04

Manufacturer reserves the right to change, at any time, specifications and designs without notice and without obligations.

One-Way Cassette (Sheet 3 of 4)

6K COOLING PERFORMANCE

AIRFLOW (CFM)	OUTDOOR DB (°F)	ID WB (°F)	60.8				64.4				66.2				71.6			
		ID DB (°F)	73.4	77.0	80.6	84.2	73.4	77.0	80.6	84.2	73.4	77.0	80.6	84.2	73.4	77.0	80.6	84.2
577	-22	TC	7682	6664	7701	7711	8139	8151	8163	8175	8733	8747	8761	9354	9369	9381	9395	9409
		S/T	0.48	0.54	0.63	0.72	0.50	0.58	0.67	0.77	0.53	0.61	0.71	0.81	0.93	1.00	1.00	1.00
		PI	0.68	0.68	0.68	0.68	0.72	0.72	0.72	0.72	0.76	0.76	0.76	0.80	0.81	0.81	0.81	0.81
	-10	TC	8613	6664	8635	8646	9129	9141	9153	9165	9723	9737	9751	10344	10358	10370	10384	10398
		S/T	0.48	0.55	0.64	0.73	0.51	0.58	0.68	0.77	0.54	0.61	0.72	0.82	0.93	1.00	1.00	1.00
		PI	0.67	0.67	0.67	0.67	0.71	0.71	0.71	0.71	0.75	0.75	0.75	0.79	0.80	0.80	0.80	0.80
	0	TC	9389	6664	9413	9425	9954	9966	9977	9989	10548	10562	10575	11168	11183	11195	11209	11223
		S/T	0.48	0.55	0.64	0.73	0.51	0.58	0.68	0.78	0.54	0.62	0.72	0.82	0.94	1.00	1.00	1.00
		PI	0.66	0.66	0.66	0.66	0.70	0.70	0.70	0.70	0.74	0.74	0.74	0.79	0.79	0.79	0.79	0.79
	5	TC	9778	6664	9802	9815	10366	10378	10390	10402	10960	10974	10988	11581	11595	11607	11621	11635
		S/T	0.48	0.55	0.64	0.73	0.51	0.58	0.68	0.78	0.54	0.62	0.72	0.83	0.94	1.00	1.00	1.00
		PI	0.66	0.66	0.66	0.66	0.70	0.70	0.70	0.70	0.74	0.74	0.74	0.78	0.78	0.78	0.78	0.79
	14	TC	10476	6664	10502	10516	11108	11120	11132	11144	11702	11716	11730	12323	12337	12350	12364	12377
		S/T	0.49	0.55	0.65	0.74	0.51	0.59	0.69	0.78	0.55	0.62	0.73	0.83	0.95	1.00	1.00	1.00
		PI	0.65	0.65	0.65	0.65	0.69	0.69	0.69	0.69	0.73	0.73	0.73	0.77	0.77	0.78	0.78	0.78
	23	TC	10709	6664	10735	10750	11356	11368	11379	11391	11950	11964	11977	12570	12585	12597	12611	12625
		S/T	0.49	0.56	0.65	0.74	0.52	0.59	0.69	0.79	0.55	0.63	0.73	0.83	0.95	1.00	1.00	1.00
		PI	0.69	0.69	0.69	0.69	0.73	0.73	0.73	0.74	0.78	0.78	0.78	0.82	0.82	0.82	0.83	0.83
	32	TC	10751	6664	10777	10792	11400	11412	11424	11436	11994	12008	12022	12615	12629	12642	12656	12669
		S/T	0.49	0.56	0.65	0.75	0.52	0.59	0.69	0.79	0.55	0.63	0.74	0.84	0.96	1.00	1.00	1.00
		PI	0.76	0.76	0.76	0.76	0.80	0.80	0.80	0.80	0.85	0.85	0.85	0.90	0.90	0.90	0.90	0.90
	41	TC	10319	6664	10344	10358	10941	10953	10965	10977	11535	11549	11563	12156	12170	12182	12196	12210
		S/T	0.49	0.56	0.66	0.75	0.52	0.60	0.70	0.79	0.55	0.63	0.74	0.84	0.96	1.00	1.00	1.00
		PI	0.60	0.60	0.60	0.61	0.64	0.64	0.64	0.64	0.68	0.68	0.68	0.72	0.72	0.72	0.72	0.72
	50	TC	9944	6664	9969	9982	10543	10555	10567	10579	11137	11151	11165	11758	11772	11785	11798	11812
		S/T	0.50	0.57	0.66	0.75	0.53	0.60	0.70	0.80	0.56	0.63	0.74	0.85	0.96	1.00	1.00	1.00
		PI	0.44	0.44	0.44	0.44	0.46	0.47	0.47	0.47	0.49	0.49	0.49	0.52	0.52	0.52	0.52	0.52
	59	TC	10142	6664	10167	10181	10754	10766	10777	10789	11348	11361	11375	11968	11983	11995	12009	12023
		S/T	0.50	0.57	0.66	0.76	0.53	0.60	0.70	0.80	0.56	0.64	0.75	0.85	0.97	1.00	1.00	1.00
		PI	0.47	0.47	0.47	0.47	0.50	0.50	0.50	0.50	0.53	0.53	0.53	0.56	0.56	0.56	0.56	0.56
	68	TC	10340	6664	10366	10380	10964	10976	10988	11000	11558	11572	11586	12179	12193	12205	12219	12233
		S/T	0.50	0.57	0.67	0.76	0.53	0.60	0.71	0.81	0.56	0.64	0.75	0.86	0.97	1.00	1.00	1.00
		PI	0.50	0.50	0.50	0.50	0.53	0.53	0.53	0.53	0.56	0.56	0.56	0.60	0.60	0.60	0.60	0.60
	77	TC	10538	6664	10564	10579	11175	11186	11198	11210	11769	11782	11796	12389	12404	12416	12430	12444
		S/T	0.51	0.59	0.69	0.78	0.54	0.62	0.73	0.83	0.58	0.66	0.77	0.88	1.00	1.00	1.00	1.00
		PI	0.53	0.53	0.53	0.53	0.56	0.56	0.57	0.57	0.60	0.60	0.60	0.63	0.63	0.63	0.64	0.64
	86	TC	9471	6664	9494	9507	10040	10052	10064	10075	10634	10648	10661	11254	11269	11281	11295	11309
		S/T	0.52	0.59	0.69	0.79	0.55	0.63	0.74	0.84	0.59	0.67	0.78	0.89	1.00	1.00	1.00	1.00
		PI	0.78	0.78	0.79	0.79	0.83	0.83	0.83	0.83	0.88	0.88	0.88	0.93	0.93	0.93	0.94	0.94
	95	TC	9376	6664	9400	9412	9940	9952	9964	9975	10534	10548	10561	11154	11169	11181	11195	11209
		S/T	0.53	0.61	0.71	0.81	0.57	0.65	0.75	0.86	0.60	0.68	0.80	0.91	0.64	0.74	0.85	0.97
		PI	0.87	0.87	0.87	0.87	0.92	0.92	0.92	0.92	0.97	0.97	0.98	1.03	1.03	1.03	1.03	1.03
	104	TC	8528	6664	8549	8560	9038	9050	9062	9074	9632	9646	9660	10253	10267	10279	10293	10307
		S/T	0.56	0.64	0.75	0.85	0.59	0.68	0.79	0.90	0.63	0.72	0.84	0.96	1.00	1.00	1.00	1.00
		PI	0.90	0.90	0.90	0.90	0.95	0.95	0.95	0.95	1.01	1.01	1.01	1.06	1.06	1.07	1.07	1.07
	114.8	TC	7752	6664	7771	7781	8214	8225	8237	8249	8808	8821	8835	9428	9443	9455	9469	9483
		S/T	0.57	0.65	0.76	0.86	0.60	0.69	0.80	0.91	0.64	0.73	0.85	0.97	1.00	1.00	1.00	1.00
		PI	0.93	0.93	0.93	0.93	0.98	0.98	0.98	0.99	1.04	1.04	1.04	1.10	1.10	1.10	1.10	1.10
	122	TC	7042	6664	7059	7069	7459	7471	7483	7495	8053	8067	8081	8674	8688	8701	8714	8728
		S/T	0.59	0.67	0.78	0.89	0.62	0.71	0.83	0.95	0.66	0.75	0.88	1.00	1.00	1.00	1.00	1.00
		PI	0.96	0.96	0.96	0.96	1.02	1.02	1.02	1.02	1.08	1.08	1.08	1.14	1.14	1.14	1.14	1.14

TC: Total Cooling Capacity (BTU/hr)

S/T: Sensible Cooling Capacity Ratio

PI: Power Input (kW)

Extrapolated Data

One-Way Cassette (Sheet 4 of 4)

6K COOLING PERFORMANCE

AIRFLOW (CFM)	OUTDOOR DB (°F)	ID WB (°F)	60.8				64.4				66.2				71.6			
		ID DB (°F)	73.4	77.0	80.6	84.2	73.4	77.0	80.6	84.2	73.4	77.0	80.6	84.2	73.4	77.0	80.6	84.2
618	-22	TC	8446	6664	8467	8478	8954	8964	8975	8986	9489	9501	9514	10048	10061	10072	10084	10097
		S/T	0.52	0.59	0.69	0.79	0.55	0.62	0.73	0.83	0.58	0.66	0.77	0.88	1.00	1.00	1.00	1.00
		PI	0.73	0.74	0.74	0.74	0.78	0.78	0.78	0.78	0.82	0.83	0.83	0.87	0.87	0.88	0.88	0.88
	-10	TC	9400	6664	9424	9436	9965	9977	9989	10001	10561	10574	10588	11183	11197	11210	11224	11238
		S/T	0.52	0.59	0.69	0.79	0.55	0.63	0.74	0.84	0.58	0.67	0.78	0.89	1.00	1.00	1.00	1.00
		PI	0.72	0.73	0.73	0.73	0.77	0.77	0.77	0.77	0.81	0.82	0.82	0.86	0.86	0.86	0.87	0.87
	0	TC	10195	6664	10221	10234	10808	10821	10834	10847	11454	11469	11484	12129	12145	12158	12173	12188
		S/T	0.52	0.60	0.70	0.80	0.55	0.63	0.74	0.84	0.59	0.67	0.78	0.89	1.00	1.00	1.00	1.00
		PI	0.72	0.72	0.72	0.72	0.76	0.76	0.76	0.76	0.81	0.81	0.81	0.85	0.85	0.85	0.86	0.86
	5	TC	10593	6664	10619	10633	11230	11243	11256	11270	11901	11916	11932	12602	12618	12632	12647	12663
		S/T	0.52	0.60	0.70	0.80	0.56	0.63	0.74	0.85	0.59	0.67	0.79	0.90	1.00	1.00	1.00	1.00
		PI	0.71	0.71	0.71	0.72	0.76	0.76	0.76	0.76	0.80	0.80	0.80	0.85	0.85	0.85	0.85	0.85
	14	TC	11309	6664	11336	11352	11988	12002	12017	12031	12705	12721	12738	13453	13470	13485	13502	13519
		S/T	0.53	0.60	0.70	0.80	0.56	0.64	0.75	0.85	0.59	0.68	0.79	0.90	1.00	1.00	1.00	1.00
		PI	0.71	0.71	0.71	0.71	0.75	0.75	0.75	0.75	0.79	0.79	0.80	0.84	0.84	0.84	0.84	0.84
	23	TC	11547	6664	11576	11591	12241	12256	12270	12285	12973	12989	13006	13737	13755	13770	13787	13804
		S/T	0.53	0.60	0.71	0.81	0.56	0.64	0.75	0.85	0.60	0.68	0.79	0.91	1.00	1.00	1.00	1.00
		PI	0.75	0.75	0.75	0.75	0.80	0.80	0.80	0.80	0.84	0.84	0.85	0.89	0.89	0.90	0.90	0.90
	32	TC	11590	6664	11619	11634	12287	12301	12316	12330	13021	13038	13055	13788	13806	13821	13838	13855
		S/T	0.53	0.61	0.71	0.81	0.56	0.64	0.75	0.86	0.60	0.68	0.80	0.91	1.00	1.00	1.00	1.00
		PI	0.82	0.82	0.82	0.82	0.87	0.87	0.87	0.87	0.92	0.92	0.92	0.98	0.98	0.98	0.98	0.98
	41	TC	11147	6664	11175	11190	11817	11831	11845	11859	12524	12540	12556	13261	13279	13293	13309	13326
		S/T	0.54	0.61	0.71	0.81	0.57	0.65	0.76	0.86	0.60	0.69	0.80	0.91	1.00	1.00	1.00	1.00
		PI	0.65	0.66	0.66	0.66	0.69	0.69	0.70	0.70	0.74	0.74	0.74	0.78	0.78	0.78	0.78	0.78
	50	TC	10764	6664	10790	10805	11411	11424	11438	11451	12093	12108	12124	12805	12822	12836	12851	12867
		S/T	0.54	0.61	0.72	0.82	0.57	0.65	0.76	0.87	0.60	0.69	0.81	0.92	1.00	1.00	1.00	1.00
		PI	0.48	0.48	0.48	0.48	0.50	0.51	0.51	0.51	0.53	0.54	0.54	0.57	0.57	0.57	0.57	0.57
	59	TC	10967	6664	10994	11009	11626	11640	11653	11667	12320	12336	12353	13046	13063	13077	13094	13110
		S/T	0.54	0.62	0.72	0.82	0.57	0.65	0.76	0.87	0.61	0.69	0.81	0.92	1.00	1.00	1.00	1.00
		PI	0.51	0.51	0.51	0.51	0.54	0.54	0.54	0.54	0.57	0.57	0.57	0.61	0.61	0.61	0.61	0.61
	68	TC	11169	6664	11197	11212	11841	11855	11869	11883	12548	12565	12581	13288	13305	13319	13336	13352
		S/T	0.54	0.62	0.72	0.83	0.58	0.66	0.77	0.88	0.61	0.70	0.81	0.93	1.00	1.00	1.00	1.00
		PI	0.54	0.54	0.55	0.55	0.58	0.58	0.58	0.58	0.61	0.61	0.61	0.65	0.65	0.65	0.65	0.65
	77	TC	11372	6664	11400	11416	12056	12070	12084	12099	12776	12793	12809	13529	13546	13561	13578	13595
		S/T	0.56	0.64	0.74	0.85	0.59	0.67	0.79	0.90	0.63	0.71	0.84	0.95	1.00	1.00	1.00	1.00
		PI	0.58	0.58	0.58	0.58	0.61	0.61	0.61	0.61	0.65	0.65	0.65	0.69	0.69	0.69	0.69	0.69
	86	TC	10278	6664	10304	10318	10896	10909	10922	10935	11547	11562	11577	12227	12243	12257	12272	12287
		S/T	0.57	0.64	0.75	0.86	0.60	0.68	0.80	0.91	0.64	0.72	0.85	0.97	1.00	1.00	1.00	1.00
		PI	0.85	0.85	0.85	0.85	0.90	0.90	0.90	0.91	0.96	0.96	0.96	1.01	1.01	1.01	1.02	1.02
	95	TC	10182	6664	10207	10221	10794	10807	10820	10832	11439	11454	11469	12113	12129	12142	12157	12172
		S/T	0.58	0.66	0.77	0.88	0.61	0.70	0.82	0.93	0.65	0.74	0.87	0.99	1.00	1.00	1.00	1.00
		PI	0.94	0.94	0.94	0.94	1.00	1.00	1.00	1.00	1.06	1.06	1.06	1.12	1.12	1.12	1.12	1.12
	104	TC	9313	6664	9336	9348	9872	9884	9896	9908	10462	10476	10490	11079	11093	11105	11119	11133
		S/T	0.61	0.69	0.81	0.93	0.65	0.74	0.86	0.98	0.68	0.75	0.91	1.00	1.00	1.00	1.00	1.00
		PI	0.97	0.97	0.97	0.98	1.03	1.03	1.03	1.03	1.09	1.09	1.10	1.16	1.16	1.16	1.16	1.16
	114.8	TC	8518	6664	8539	8550	9030	9040	9051	9062	9569	9582	9594	10133	10146	10157	10170	10182
		S/T	0.62	0.70	0.82	0.94	0.65	0.74	0.87	0.99	0.69	0.75	0.92	1.00	1.00	1.00	1.00	1.00
		PI	1.01	1.01	1.01	1.01	1.07	1.07	1.07	1.07	1.13	1.13	1.13	1.20	1.20	1.20	1.20	1.20
	122	TC	7791	6664	7810	7820	8259	8269	8278	8288	8752	8764	8775	9268	9280	9290	9302	9313
		S/T	0.64	0.73	0.85	0.97	0.68	0.75	0.90	1.00	0.72	0.75	0.96	1.00	1.00	1.00	1.00	1.00
		PI	1.04	1.04	1.04	1.04	1.10	1.10	1.11	1.11	1.17	1.17	1.17	1.24	1.24	1.24	1.24	1.24

Manufacturer reserves the right to change, at any time, specifications and designs without notice and without obligations.

One-Way Cassette (Sheet 1 of 4)

9K COOLING PERFORMANCE																		
AIRFLOW (CFM)	OUTDOOR DB (°F)	ID WB (°F)	60.8				64.4				66.2				71.6			
		ID DB (°F)	73.4	77.0	80.6	84.2	73.4	77.0	80.6	84.2	73.4	77.0	80.6	84.2	73.4	77.0	80.6	84.2
489	-22	TC	8305	8316	8325	8337	8804	8814	8825	8835	9330	9342	9354	9909	9923	9934	9947	9960
		S/T	0.40	0.45	0.53	0.60	0.42	0.48	0.56	0.64	0.45	0.51	0.59	0.68	0.77	0.88	0.91	0.91
		PI	0.30	0.30	0.30	0.30	0.32	0.32	0.32	0.32	0.34	0.34	0.34	0.36	0.36	0.36	0.36	0.36
	-10	TC	8365	8316	8385	8396	8867	8878	8888	8899	9397	9409	9422	9976	9990	10001	10014	10027
		S/T	0.40	0.45	0.53	0.61	0.42	0.48	0.56	0.64	0.45	0.51	0.60	0.68	0.78	0.89	0.91	0.91
		PI	0.31	0.31	0.31	0.31	0.33	0.33	0.33	0.33	0.35	0.35	0.35	0.37	0.37	0.37	0.37	0.37
	0	TC	8414	8316	8435	8446	8920	8931	8941	8952	9453	9465	9478	10032	10046	10057	10070	10083
		S/T	0.40	0.46	0.53	0.61	0.43	0.48	0.57	0.65	0.45	0.51	0.60	0.69	0.78	0.89	0.91	0.91
		PI	0.32	0.32	0.32	0.32	0.34	0.34	0.34	0.34	0.36	0.36	0.36	0.38	0.38	0.38	0.38	0.39
	5	TC	8439	8316	8460	8471	8946	8957	8968	8978	9481	9493	9506	10060	10074	10085	10098	10111
		S/T	0.40	0.46	0.54	0.61	0.43	0.49	0.57	0.65	0.45	0.52	0.60	0.69	0.78	0.89	0.91	0.91
		PI	0.33	0.33	0.33	0.33	0.35	0.35	0.35	0.35	0.37	0.37	0.37	0.39	0.39	0.39	0.39	0.39
	14	TC	8484	8316	8505	8516	8994	9004	9015	9026	9531	9544	9556	10111	10124	10136	10149	10162
		S/T	0.40	0.46	0.54	0.61	0.43	0.49	0.57	0.65	0.45	0.52	0.61	0.69	0.79	0.90	0.91	0.91
		PI	0.34	0.34	0.34	0.34	0.36	0.36	0.36	0.36	0.38	0.38	0.38	0.40	0.40	0.40	0.40	0.40
	23	TC	8499	8316	8520	8531	9010	9020	9031	9042	9548	9560	9573	10128	10141	10153	10166	10179
		S/T	0.41	0.46	0.54	0.62	0.43	0.49	0.57	0.65	0.46	0.52	0.61	0.69	0.79	0.90	0.91	0.91
		PI	0.38	0.38	0.38	0.38	0.40	0.40	0.40	0.40	0.42	0.43	0.43	0.45	0.45	0.45	0.45	0.45
	32	TC	8509	8316	8530	8541	9020	9031	9042	9052	9559	9572	9584	10139	10152	10164	10177	10190
		S/T	0.41	0.47	0.54	0.62	0.43	0.49	0.58	0.66	0.46	0.52	0.61	0.70	0.80	0.91	0.91	0.91
		PI	0.43	0.44	0.44	0.44	0.46	0.46	0.46	0.46	0.49	0.49	0.49	0.52	0.52	0.52	0.52	0.52
	41	TC	8665	8316	8686	8698	9185	9196	9207	9218	9734	9747	9760	10314	10328	10339	10352	10365
		S/T	0.41	0.47	0.55	0.62	0.44	0.50	0.58	0.66	0.46	0.53	0.61	0.70	0.80	0.91	0.91	0.91
		PI	0.47	0.47	0.47	0.47	0.50	0.50	0.50	0.50	0.53	0.53	0.53	0.56	0.56	0.56	0.56	0.56
	50	TC	8846	8316	8868	8880	9378	9389	9400	9411	9938	9951	9964	10519	10532	10544	10557	10570
		S/T	0.41	0.47	0.55	0.63	0.44	0.50	0.58	0.66	0.46	0.53	0.62	0.70	0.80	0.91	0.91	0.91
		PI	0.49	0.49	0.49	0.49	0.52	0.52	0.52	0.52	0.55	0.55	0.55	0.58	0.58	0.58	0.58	0.58
	59	TC	8928	8316	8950	8962	9464	9476	9487	9498	10030	10043	10056	10611	10624	10636	10649	10662
		S/T	0.41	0.47	0.55	0.63	0.44	0.50	0.59	0.67	0.47	0.53	0.62	0.71	0.81	0.91	0.91	0.91
		PI	0.49	0.49	0.49	0.49	0.52	0.52	0.52	0.52	0.55	0.55	0.56	0.59	0.59	0.59	0.59	0.59
	68	TC	9010	8316	9032	9044	9551	9562	9574	9585	10122	10135	10148	10703	10717	10728	10741	10754
		S/T	0.42	0.47	0.56	0.63	0.44	0.50	0.59	0.67	0.47	0.53	0.62	0.71	0.81	0.91	0.91	0.91
		PI	0.50	0.50	0.50	0.50	0.53	0.53	0.53	0.53	0.56	0.56	0.56	0.59	0.60	0.60	0.60	0.60
	77	TC	9091	8316	9114	9126	9638	9649	9661	9672	10214	10227	10240	10795	10809	10820	10833	10846
		S/T	0.43	0.49	0.57	0.65	0.45	0.52	0.60	0.69	0.48	0.55	0.64	0.73	0.83	0.95	1.00	1.00
		PI	0.51	0.51	0.51	0.51	0.54	0.54	0.54	0.54	0.57	0.57	0.57	0.60	0.60	0.60	0.60	0.61
	86	TC	8780	8316	8801	8813	9308	9319	9330	9341	9864	9877	9889	10444	10458	10469	10482	10495
		S/T	0.43	0.49	0.58	0.66	0.46	0.52	0.61	0.70	0.49	0.56	0.65	0.74	0.84	0.96	1.00	1.00
		PI	0.78	0.78	0.78	0.79	0.83	0.83	0.83	0.83	0.88	0.88	0.88	0.93	0.93	0.93	0.93	0.94
	95	TC	8771	8316	8793	8804	9298	9309	9320	9331	9854	9866	9879	10434	10448	10459	10472	10485
		S/T	0.44	0.51	0.59	0.68	0.47	0.54	0.63	0.72	0.50	0.57	0.67	0.76	0.87	0.99	1.00	1.00
		PI	0.85	0.85	0.85	0.85	0.90	0.90	0.90	0.91	0.96	0.96	0.96	1.01	1.01	1.02	1.02	1.02
	104	TC	7763	8316	7782	7792	8229	8239	8249	8259	8721	8732	8744	9299	9312	9324	9337	9350
		S/T	0.47	0.53	0.62	0.71	0.49	0.56	0.66	0.75	0.52	0.60	0.70	0.80	0.91	1.00	1.00	1.00
		PI	0.86	0.86	0.87	0.87	0.92	0.92	0.92	0.92	0.97	0.97	0.97	1.03	1.03	1.03	1.03	1.03
	114.8	TC	6871	8316	6887	6897	7283	7292	7301	7309	7719	7729	7739	8294	8307	8319	8332	8345
		S/T	0.47	0.54	0.63	0.72	0.50	0.57	0.67	0.76	0.53	0.60	0.71	0.81	0.92	1.00	1.00	1.00
		PI	0.87	0.88	0.88	0.88	0.93	0.93	0.93	0.93	0.98	0.98	0.99	1.04	1.04	1.04	1.04	1.04
	122	TC	6081	8316	6096	6104	6446	6454	6462	6469	6832	6840	6849	7457	7472	7485	7499	7513
		S/T	0.49	0.56	0.65	0.74	0.52	0.59	0.69	0.79	0.55	0.63	0.73	0.83	0.95	1.00	1.00	1.00
		PI	0.89	0.89	0.89	0.89	0.94	0.94	0.94	0.94	1.00	1.00	1.00	1.06	1.06	1.06	1.06	1.06

Manufacturer reserves the right to change, at any time, specifications and designs without notice and without obligations.

One-Way Cassette (Sheet 2 of 4)

9K COOLING PERFORMANCE																		
AIRFLOW (CFM)	OUTDOOR DB (°F)	ID WB (°F)	60.8				64.4				66.2				71.6			
		ID DB (°F)	73.4	77.0	80.6	84.2	73.4	77.0	80.6	84.2	73.4	77.0	80.6	84.2	73.4	77.0	80.6	84.2
530	-22	TC	8825	8316	8847	8859	9354	9366	9378	9390	9947	9961	9974	10566	10580	10592	10606	10620
		S/T	0.43	0.50	0.58	0.66	0.46	0.52	0.61	0.70	0.49	0.56	0.65	0.74	0.85	0.96	1.00	1.00
		PI	0.33	0.33	0.33	0.33	0.35	0.35	0.35	0.35	0.37	0.37	0.37	0.39	0.39	0.39	0.39	0.39
	-10	TC	8893	8316	8915	8927	9426	9438	9450	9461	10019	10032	10046	10637	10652	10664	10678	10692
		S/T	0.44	0.50	0.58	0.66	0.46	0.53	0.62	0.70	0.49	0.56	0.66	0.75	0.85	0.97	1.00	1.00
		PI	0.34	0.34	0.34	0.34	0.36	0.36	0.36	0.36	0.38	0.38	0.38	0.40	0.40	0.41	0.41	0.41
	0	TC	8949	8316	8971	8983	9486	9498	9509	9521	10078	10092	10106	10697	10712	10724	10738	10752
		S/T	0.44	0.50	0.59	0.67	0.47	0.53	0.62	0.71	0.49	0.56	0.66	0.75	0.86	0.98	1.00	1.00
		PI	0.35	0.35	0.35	0.35	0.37	0.37	0.37	0.37	0.39	0.40	0.40	0.42	0.42	0.42	0.42	0.42
	5	TC	8977	8316	8999	9011	9516	9527	9539	9551	10108	10122	10135	10727	10742	10754	10767	10781
		S/T	0.44	0.50	0.59	0.67	0.47	0.53	0.62	0.71	0.50	0.56	0.66	0.75	0.86	0.98	1.00	1.00
		PI	0.36	0.36	0.36	0.36	0.38	0.38	0.38	0.38	0.40	0.40	0.40	0.42	0.43	0.43	0.43	0.43
	14	TC	9028	8316	9050	9062	9569	9581	9593	9605	10162	10176	10189	10781	10795	10807	10821	10835
		S/T	0.44	0.51	0.59	0.67	0.47	0.54	0.63	0.71	0.50	0.57	0.66	0.76	0.86	0.98	1.00	1.00
		PI	0.37	0.37	0.37	0.37	0.39	0.39	0.39	0.39	0.41	0.41	0.41	0.44	0.44	0.44	0.44	0.44
	23	TC	9045	8316	9067	9079	9587	9599	9611	9623	10180	10193	10207	10799	10813	10825	10839	10853
		S/T	0.45	0.51	0.59	0.68	0.47	0.54	0.63	0.72	0.50	0.57	0.67	0.76	0.87	0.99	1.00	1.00
		PI	0.41	0.41	0.41	0.41	0.44	0.44	0.44	0.44	0.46	0.46	0.46	0.49	0.49	0.49	0.49	0.49
	32	TC	9056	8316	9078	9090	9599	9611	9623	9635	10192	10205	10219	10811	10825	10837	10851	10865
		S/T	0.45	0.51	0.60	0.68	0.47	0.54	0.63	0.72	0.50	0.57	0.67	0.76	0.87	0.99	1.00	1.00
		PI	0.47	0.47	0.48	0.48	0.50	0.50	0.50	0.50	0.53	0.53	0.53	0.56	0.56	0.57	0.57	0.57
	41	TC	9232	8316	9255	9267	9787	9798	9810	9822	10379	10393	10406	10998	11012	11024	11038	11052
		S/T	0.45	0.51	0.60	0.68	0.48	0.54	0.64	0.72	0.51	0.58	0.67	0.77	0.88	1.00	1.00	1.00
		PI	0.51	0.51	0.51	0.51	0.54	0.54	0.54	0.54	0.57	0.58	0.58	0.61	0.61	0.61	0.61	0.61
	50	TC	9437	8316	9460	9473	10004	10016	10028	10040	10597	10610	10624	11216	11230	11242	11256	11270
		S/T	0.45	0.52	0.60	0.69	0.48	0.55	0.64	0.73	0.51	0.58	0.68	0.77	0.88	1.00	1.00	1.00
		PI	0.53	0.53	0.53	0.53	0.56	0.56	0.56	0.56	0.60	0.60	0.60	0.63	0.63	0.63	0.63	0.63
	59	TC	9529	8316	9553	9566	10103	10114	10126	10138	10695	10709	10722	11314	11328	11340	11354	11368
		S/T	0.45	0.52	0.61	0.69	0.48	0.55	0.64	0.73	0.51	0.58	0.68	0.78	0.88	1.00	1.00	1.00
		PI	0.54	0.54	0.54	0.54	0.57	0.57	0.57	0.57	0.60	0.60	0.61	0.64	0.64	0.64	0.64	0.64
	68	TC	9622	8316	9646	9659	10201	10213	10224	10236	10793	10807	10821	11412	11427	11439	11453	11467
		S/T	0.46	0.52	0.61	0.69	0.48	0.55	0.65	0.74	0.51	0.58	0.68	0.78	0.89	1.00	1.00	1.00
		PI	0.55	0.55	0.55	0.55	0.58	0.58	0.58	0.58	0.61	0.61	0.61	0.65	0.65	0.65	0.65	0.65
	77	TC	9714	8316	9738	9752	10299	10311	10323	10334	10892	10905	10919	11511	11525	11537	11551	11565
		S/T	0.47	0.53	0.63	0.71	0.50	0.57	0.66	0.76	0.53	0.60	0.70	0.80	0.91	1.00	1.00	1.00
		PI	0.55	0.55	0.55	0.55	0.59	0.59	0.59	0.59	0.62	0.62	0.62	0.66	0.66	0.66	0.66	0.66
	86	TC	9362	8316	9385	9398	9925	9937	9948	9960	10517	10531	10545	11136	11151	11163	11177	11191
		S/T	0.47	0.54	0.63	0.72	0.50	0.57	0.67	0.77	0.53	0.61	0.71	0.81	0.92	1.00	1.00	1.00
		PI	0.85	0.85	0.86	0.86	0.91	0.91	0.91	0.91	0.96	0.96	0.96	1.02	1.02	1.02	1.02	1.02
	95	TC	9352	8316	9375	9388	9914	9926	9938	9949	10507	10520	10534	11125	11140	11152	11166	11180
		S/T	0.49	0.56	0.65	0.74	0.52	0.59	0.69	0.78	0.55	0.62	0.73	0.83	0.95	1.00	1.00	1.00
		PI	0.93	0.93	0.93	0.93	0.98	0.99	0.99	0.99	1.04	1.05	1.05	1.11	1.11	1.11	1.11	1.11
	104	TC	8213	8316	8233	8244	8703	8715	8727	8739	9296	9309	9323	9915	9929	9941	9955	9969
		S/T	0.51	0.58	0.68	0.78	0.54	0.62	0.72	0.82	0.57	0.66	0.77	0.87	1.00	1.00	1.00	1.00
		PI	0.94	0.94	0.94	0.95	1.00	1.00	1.00	1.00	1.06	1.06	1.06	1.12	1.12	1.12	1.12	1.12
	114.8	TC	7204	8316	7222	7232	7632	7644	7655	7667	8224	8238	8252	8843	8858	8870	8884	8897
		S/T	0.52	0.59	0.69	0.79	0.55	0.63	0.73	0.83	0.58	0.66	0.78	0.88	1.00	1.00	1.00	1.00
		PI	0.95	0.96	0.96	0.96	1.01	1.01	1.01	1.02	1.07	1.07	1.08	1.13	1.14	1.14	1.14	1.14
	122	TC	6258	8316	6273	6282	6624	6637	6650	6662	7273	7288	7303	7952	7967	7981	7996	8011
		S/T	0.54	0.61	0.71	0.81	0.57	0.65	0.76	0.86	0.60	0.69	0.80	0.92	1.00	1.00	1.00	1.00
		PI	0.97	0.97	0.97	0.97	1.03	1.03	1.03	1.03	1.09	1.09	1.09	1.15	1.15	1.15	1.16	1.16

One-Way Cassette (Sheet 3 of 4)

9K COOLING PERFORMANCE																		
AIRFLOW (CFM)	OUTDOOR DB (°F)	ID WB (°F)	60.8				64.4				66.2				71.6			
		ID DB (°F)	73.4	77.0	80.6	84.2	73.4	77.0	80.6	84.2	73.4	77.0	80.6	84.2	73.4	77.0	80.6	84.2
577	-22	TC	9674	8316	9698	9711	10254	10267	10280	10293	10904	10919	10934	11582	11598	11611	11626	11642
		S/T	0.48	0.54	0.63	0.72	0.50	0.58	0.67	0.77	0.53	0.61	0.71	0.81	0.93	1.00	1.00	1.00
		PI	0.36	0.36	0.36	0.36	0.38	0.38	0.38	0.38	0.40	0.40	0.40	0.43	0.43	0.43	0.43	0.43
	-10	TC	9748	8316	9772	9785	10333	10346	10358	10371	10982	10997	11012	11661	11676	11690	11705	11720
		S/T	0.48	0.55	0.64	0.73	0.51	0.58	0.68	0.77	0.54	0.61	0.72	0.82	0.93	1.00	1.00	1.00
		PI	0.37	0.37	0.37	0.37	0.40	0.40	0.40	0.40	0.42	0.42	0.42	0.44	0.44	0.44	0.44	0.45
	0	TC	9810	8316	9834	9847	10398	10411	10424	10437	11048	11063	11078	11726	11742	11755	11770	11786
		S/T	0.48	0.55	0.64	0.73	0.51	0.58	0.68	0.78	0.54	0.62	0.72	0.82	0.94	1.00	1.00	1.00
		PI	0.39	0.39	0.39	0.39	0.41	0.41	0.41	0.41	0.43	0.43	0.43	0.46	0.46	0.46	0.46	0.46
	5	TC	9841	8316	9865	9878	10431	10444	10457	10470	11080	11095	11110	11759	11775	11788	11803	11818
		S/T	0.48	0.55	0.64	0.73	0.51	0.58	0.68	0.78	0.54	0.62	0.72	0.83	0.94	1.00	1.00	1.00
		PI	0.39	0.39	0.39	0.39	0.42	0.42	0.42	0.42	0.44	0.44	0.44	0.47	0.47	0.47	0.47	0.47
	14	TC	9896	8316	9920	9934	10490	10503	10516	10529	11139	11154	11169	11818	11834	11847	11862	11877
		S/T	0.49	0.55	0.65	0.74	0.51	0.59	0.69	0.78	0.55	0.62	0.73	0.83	0.95	1.00	1.00	1.00
		PI	0.40	0.40	0.40	0.40	0.43	0.43	0.43	0.43	0.45	0.45	0.45	0.48	0.48	0.48	0.48	0.48
	23	TC	9914	8316	9939	9952	10509	10522	10535	10548	11159	11174	11189	11837	11853	11866	11882	11897
		S/T	0.49	0.56	0.65	0.74	0.52	0.59	0.69	0.79	0.55	0.63	0.73	0.83	0.95	1.00	1.00	1.00
		PI	0.45	0.45	0.45	0.45	0.48	0.48	0.48	0.48	0.51	0.51	0.51	0.54	0.54	0.54	0.54	0.54
	32	TC	9927	8316	9951	9965	10523	10535	10548	10561	11172	11187	11202	11850	11866	11880	11895	11910
		S/T	0.49	0.56	0.65	0.75	0.52	0.59	0.69	0.79	0.55	0.63	0.74	0.84	0.96	1.00	1.00	1.00
		PI	0.52	0.52	0.52	0.52	0.55	0.55	0.55	0.55	0.58	0.58	0.59	0.62	0.62	0.62	0.62	0.62
	41	TC	10120	8316	10145	10159	10728	10741	10754	10767	11377	11392	11407	12056	12072	12085	12100	12115
		S/T	0.49	0.56	0.66	0.75	0.52	0.60	0.70	0.79	0.55	0.63	0.74	0.84	0.96	1.00	1.00	1.00
		PI	0.56	0.56	0.56	0.56	0.59	0.60	0.60	0.60	0.63	0.63	0.63	0.67	0.67	0.67	0.67	0.67
	50	TC	10344	8316	10370	10384	10966	10979	10992	11005	11616	11631	11646	12294	12310	12323	12339	12354
		S/T	0.50	0.57	0.66	0.75	0.53	0.60	0.70	0.80	0.56	0.63	0.74	0.85	0.96	1.00	1.00	1.00
		PI	0.58	0.58	0.58	0.58	0.62	0.62	0.62	0.62	0.65	0.65	0.65	0.69	0.69	0.69	0.69	0.70
	59	TC	10446	8316	10472	10486	11074	11087	11100	11113	11724	11739	11754	12402	12418	12431	12446	12462
		S/T	0.50	0.57	0.66	0.76	0.53	0.60	0.70	0.80	0.56	0.64	0.75	0.85	0.97	1.00	1.00	1.00
		PI	0.59	0.59	0.59	0.59	0.62	0.63	0.63	0.63	0.66	0.66	0.66	0.70	0.70	0.70	0.70	0.70
	68	TC	10547	8316	10573	10588	11182	11195	11208	11221	11831	11846	11861	12510	12526	12539	12554	12569
		S/T	0.50	0.57	0.67	0.76	0.53	0.60	0.71	0.81	0.56	0.64	0.75	0.86	0.97	1.00	1.00	1.00
		PI	0.60	0.60	0.60	0.60	0.63	0.63	0.63	0.64	0.67	0.67	0.67	0.71	0.71	0.71	0.71	0.71
	77	TC	10649	8316	10675	10689	11290	11303	11316	11328	11939	11954	11969	12618	12633	12647	12662	12677
		S/T	0.51	0.59	0.69	0.78	0.54	0.62	0.73	0.83	0.58	0.66	0.77	0.88	1.00	1.00	1.00	1.00
		PI	0.61	0.61	0.61	0.61	0.64	0.64	0.64	0.64	0.68	0.68	0.68	0.72	0.72	0.72	0.72	0.72
	86	TC	10263	8316	10288	10302	10879	10892	10905	10918	11529	11544	11559	12207	12223	12236	12252	12267
		S/T	0.52	0.59	0.69	0.79	0.55	0.63	0.74	0.84	0.59	0.67	0.78	0.89	1.00	1.00	1.00	1.00
		PI	0.94	0.94	0.94	0.94	0.99	0.99	0.99	1.00	1.05	1.05	1.05	1.11	1.11	1.12	1.12	1.12
	95	TC	10252	8316	10277	10291	10868	10881	10893	10906	11517	11532	11547	12196	12211	12225	12240	12255
		S/T	0.53	0.61	0.71	0.81	0.57	0.65	0.75	0.86	0.60	0.68	0.80	0.91	0.64	0.74	0.85	0.97
		PI	1.02	1.02	1.02	1.02	1.08	1.08	1.08	1.08	1.14	1.15	1.15	1.21	1.21	1.21	1.22	1.22
	104	TC	9003	8316	9025	9037	9540	9553	9566	9579	10190	10205	10220	10868	10884	10897	10913	10928
		S/T	0.56	0.64	0.75	0.85	0.59	0.68	0.79	0.90	0.63	0.72	0.84	0.96	1.00	1.00	1.00	1.00
		PI	1.03	1.03	1.03	1.04	1.09	1.10	1.10	1.10	1.16	1.16	1.16	1.23	1.23	1.23	1.23	1.23
	114.8	TC	7897	8316	7917	7927	8366	8379	8392	8405	9015	9030	9045	9694	9710	9723	9738	9753
		S/T	0.57	0.65	0.76	0.86	0.60	0.69	0.80	0.91	0.64	0.73	0.85	0.97	1.00	1.00	1.00	1.00
		PI	1.05	1.05	1.05	1.05	1.11	1.11	1.11	1.11	1.18	1.18	1.18	1.24	1.24	1.25	1.25	1.25
	122	TC	6919	8316	6936	6945	7326	7339	7352	7365	7976	7991	8006	8654	8670	8683	8698	8714
		S/T	0.59	0.67	0.78	0.89	0.62	0.71	0.83	0.95	0.66	0.75	0.88	1.00	1.00	1.00	1.00	1.00
		PI	1.06	1.06	1.06	1.06	1.12	1.13	1.13	1.13	1.19	1.19	1.19	1.26	1.26	1.26	1.27	1.27

TC: Total Cooling Capacity (BTU/hr)

S/T: Sensible Cooling Capacity Ratio

PI: Power Input (kW)

Extrapolated Data

One-Way Cassette (Sheet 4 of 4)

9K COOLING PERFORMANCE																		
AIRFLOW (CFM)	OUTDOOR DB (°F)	ID WB (°F)	60.8				64.4				66.2				71.6			
		ID DB (°F)	73.4	77.0	80.6	84.2	73.4	77.0	80.6	84.2	73.4	77.0	80.6	84.2	73.4	77.0	80.6	84.2
618	-22	TC	10541	8316	10567	10581	11174	11188	11201	11214	11842	11857	11873	12540	12556	12570	12585	12601
		S/T	0.52	0.59	0.69	0.79	0.55	0.62	0.73	0.83	0.58	0.66	0.77	0.88	1.00	1.00	1.00	1.00
		PI	0.39	0.39	0.39	0.39	0.41	0.41	0.41	0.41	0.44	0.44	0.44	0.46	0.46	0.46	0.46	0.46
	-10	TC	10617	8316	10643	10657	11255	11268	11281	11295	11927	11943	11958	12630	12646	12660	12676	12691
		S/T	0.52	0.59	0.69	0.79	0.55	0.63	0.74	0.84	0.58	0.67	0.78	0.89	1.00	1.00	1.00	1.00
		PI	0.40	0.41	0.41	0.41	0.43	0.43	0.43	0.43	0.45	0.46	0.46	0.48	0.48	0.48	0.48	0.48
	0	TC	10680	8316	10706	10720	11322	11335	11348	11362	11998	12014	12029	12705	12721	12735	12751	12767
		S/T	0.52	0.60	0.70	0.80	0.55	0.63	0.74	0.84	0.59	0.67	0.78	0.89	1.00	1.00	1.00	1.00
		PI	0.42	0.42	0.42	0.42	0.44	0.44	0.44	0.45	0.47	0.47	0.47	0.50	0.50	0.50	0.50	0.50
	5	TC	10711	8316	10738	10752	11355	11368	11382	11395	12034	12049	12065	12742	12759	12773	12789	12805
		S/T	0.52	0.60	0.70	0.80	0.56	0.63	0.74	0.85	0.59	0.67	0.79	0.90	1.00	1.00	1.00	1.00
		PI	0.43	0.43	0.43	0.43	0.45	0.45	0.45	0.45	0.48	0.48	0.48	0.51	0.51	0.51	0.51	0.51
	14	TC	10768	8316	10795	10809	11415	11429	11442	11456	12097	12113	12129	12810	12827	12841	12857	12873
		S/T	0.53	0.60	0.70	0.80	0.56	0.64	0.75	0.85	0.59	0.68	0.79	0.90	1.00	1.00	1.00	1.00
		PI	0.44	0.44	0.44	0.44	0.46	0.46	0.46	0.47	0.49	0.49	0.49	0.52	0.52	0.52	0.52	0.52
	23	TC	10787	8316	10814	10828	11435	11449	11462	11476	12119	12134	12150	12832	12849	12863	12879	12895
		S/T	0.53	0.60	0.71	0.81	0.56	0.64	0.75	0.85	0.60	0.68	0.79	0.91	1.00	1.00	1.00	1.00
		PI	0.49	0.49	0.49	0.49	0.52	0.52	0.52	0.52	0.55	0.55	0.55	0.58	0.58	0.59	0.59	0.59
	32	TC	10800	8316	10826	10841	11449	11462	11476	11489	12133	12149	12164	12847	12864	12878	12894	12910
		S/T	0.53	0.61	0.71	0.81	0.56	0.64	0.75	0.86	0.60	0.68	0.80	0.91	1.00	1.00	1.00	1.00
		PI	0.56	0.57	0.57	0.57	0.60	0.60	0.60	0.60	0.63	0.63	0.64	0.67	0.67	0.67	0.67	0.67
	41	TC	10997	8316	11025	11039	11658	11672	11686	11700	12355	12371	12387	13083	13100	13114	13131	13147
		S/T	0.54	0.61	0.71	0.81	0.57	0.65	0.76	0.86	0.60	0.69	0.80	0.91	1.00	1.00	1.00	1.00
		PI	0.61	0.61	0.61	0.61	0.65	0.65	0.65	0.65	0.68	0.68	0.69	0.72	0.73	0.73	0.73	0.73
	50	TC	11227	8316	11255	11270	11902	11916	11931	11945	12614	12630	12646	13357	13374	13388	13405	13422
		S/T	0.54	0.61	0.72	0.82	0.57	0.65	0.76	0.87	0.60	0.69	0.81	0.92	1.00	1.00	1.00	1.00
		PI	0.63	0.63	0.63	0.63	0.67	0.67	0.67	0.67	0.71	0.71	0.71	0.75	0.75	0.75	0.75	0.75
	59	TC	11331	8316	11359	11375	12012	12027	12041	12055	12730	12747	12763	13480	13498	13512	13529	13546
		S/T	0.54	0.62	0.72	0.82	0.57	0.65	0.76	0.87	0.61	0.69	0.81	0.92	1.00	1.00	1.00	1.00
		PI	0.64	0.64	0.64	0.64	0.68	0.68	0.68	0.68	0.72	0.72	0.72	0.76	0.76	0.76	0.76	0.77
	68	TC	11435	8316	11464	11479	12123	12137	12151	12166	12847	12864	12880	13604	13621	13636	13653	13670
		S/T	0.54	0.62	0.72	0.83	0.58	0.66	0.77	0.88	0.61	0.70	0.81	0.93	1.00	1.00	1.00	1.00
		PI	0.65	0.65	0.65	0.65	0.69	0.69	0.69	0.69	0.73	0.73	0.73	0.77	0.77	0.77	0.77	0.78
	77	TC	11539	8316	11568	11583	12233	12247	12262	12276	12964	12981	12997	13727	13745	13760	13777	13794
		S/T	0.56	0.64	0.74	0.85	0.59	0.67	0.79	0.90	0.63	0.71	0.84	0.95	1.00	1.00	1.00	1.00
		PI	0.66	0.66	0.66	0.66	0.70	0.70	0.70	0.70	0.74	0.74	0.74	0.78	0.78	0.78	0.78	0.79
	86	TC	11144	8316	11171	11186	11813	11827	11841	11855	12519	12536	12552	13257	13274	13288	13305	13322
		S/T	0.57	0.64	0.75	0.86	0.60	0.68	0.80	0.91	0.64	0.72	0.85	0.97	1.00	1.00	1.00	1.00
		PI	1.02	1.02	1.02	1.02	1.08	1.08	1.08	1.08	1.14	1.14	1.14	1.21	1.21	1.21	1.21	1.21
	95	TC	11132	8316	11160	11175	11801	11815	11829	11843	12507	12523	12539	13243	13261	13275	13291	13308
		S/T	0.58	0.66	0.77	0.88	0.61	0.70	0.82	0.93	0.65	0.74	0.87	0.99	1.00	1.00	1.00	1.00
		PI	1.11	1.11	1.11	1.11	1.17	1.17	1.18	1.18	1.24	1.24	1.25	1.32	1.32	1.32	1.32	1.32
	104	TC	9853	8316	9877	9890	10445	10457	10470	10482	11069	11083	11098	11721	11736	11749	11764	11778
		S/T	0.61	0.69	0.81	0.93	0.65	0.74	0.86	0.98	0.68	0.75	0.91	1.00	1.00	1.00	1.00	1.00
		PI	1.12	1.12	1.12	1.13	1.19	1.19	1.19	1.19	1.26	1.26	1.26	1.33	1.34	1.34	1.34	1.34
	114.8	TC	8720	8316	8742	8754	9244	9255	9266	9277	9797	9810	9822	10374	10387	10399	10412	10425
		S/T	0.62	0.70	0.82	0.94	0.65	0.74	0.87	0.99	0.69	0.75	0.92	1.00	1.00	1.00	1.00	1.00
		PI	1.14	1.14	1.14	1.14	1.20	1.21	1.21	1.21	1.28	1.28	1.28	1.35	1.35	1.35	1.36	1.36
	122	TC	7718	8316	7737	7747	8182	8192	8201	8211	8671	8682	8693	9182	9193	9203	9215	9226
		S/T	0.64	0.73	0.85	0.97	0.68	0.75	0.90	1.00	0.72	0.75	0.96	1.00	1.00	1.00	1.00	1.00
		PI	1.15	1.15	1.15	1.16	1.22	1.22	1.22	1.23	1.29	1.30	1.30	1.37	1.37	1.37	1.37	1.38

Manufacturer reserves the right to change, at any time, specifications and designs without notice and without obligations.

One-Way Cassette (Sheet 1 of 4)

12K COOLING PERFORMANCE																		
AIRFLOW (CFM)	OUTDOOR DB (°F)	ID WB (°F)	60.8				64.4				66.2				71.6			
		ID DB (°F)	73.4	77.0	80.6	84.2	73.4	77.0	80.6	84.2	73.4	77.0	80.6	84.20	73.4	77.0	80.6	84.2
247	-22	TC	10987	11001	11014	11029	11647	11661	11675	11689	12343	12359	12375	12950	12964	12976	12990	13003
		S/T	0.40	0.46	0.54	0.61	0.43	0.49	0.57	0.65	0.45	0.51	0.60	0.69	0.78	0.89	0.92	0.92
		PI	0.10	0.10	0.10	0.10	0.11	0.11	0.11	0.11	0.12	0.12	0.12	0.12	0.12	0.12	0.12	0.12
	-10	TC	9981	11001	10006	10020	10581	10594	10606	10619	11214	11228	11243	11818	11832	11844	11857	11871
		S/T	0.40	0.46	0.54	0.61	0.43	0.49	0.57	0.65	0.45	0.52	0.61	0.69	0.79	0.90	0.92	0.92
		PI	0.24	0.24	0.24	0.24	0.25	0.25	0.25	0.25	0.27	0.27	0.27	0.28	0.28	0.28	0.28	0.28
	0	TC	9144	11001	9166	9179	9693	9705	9716	9728	10273	10286	10299	10874	10888	10900	10914	10927
		S/T	0.41	0.46	0.54	0.62	0.43	0.49	0.58	0.66	0.46	0.52	0.61	0.69	0.79	0.90	0.92	0.92
		PI	0.35	0.35	0.35	0.35	0.37	0.37	0.37	0.37	0.39	0.39	0.39	0.42	0.42	0.42	0.42	0.42
	5	TC	8725	11001	8747	8758	9249	9260	9271	9282	9802	9815	9828	10403	10417	10428	10442	10455
		S/T	0.41	0.47	0.54	0.62	0.43	0.49	0.58	0.66	0.46	0.52	0.61	0.70	0.79	0.91	0.92	0.92
		PI	0.41	0.41	0.41	0.41	0.43	0.43	0.43	0.43	0.46	0.46	0.46	0.48	0.48	0.48	0.48	0.49
	14	TC	7971	11001	7991	8002	8450	8460	8470	8480	8955	8967	8978	9553	9568	9579	9593	9606
		S/T	0.41	0.47	0.55	0.62	0.43	0.50	0.58	0.66	0.46	0.53	0.61	0.70	0.80	0.91	0.92	0.92
		PI	0.51	0.51	0.51	0.51	0.54	0.54	0.54	0.54	0.57	0.57	0.57	0.60	0.60	0.60	0.61	0.61
	23	TC	7720	11001	7739	7749	8184	8193	8203	8213	8673	8684	8695	9270	9284	9296	9310	9323
		S/T	0.41	0.47	0.55	0.63	0.44	0.50	0.58	0.66	0.46	0.53	0.62	0.70	0.80	0.91	0.92	0.92
		PI	0.55	0.55	0.55	0.55	0.59	0.59	0.59	0.59	0.62	0.62	0.62	0.66	0.66	0.66	0.66	0.66
	32	TC	8019	11001	8039	8050	8501	8511	8521	8531	9009	9021	9032	9608	9622	9633	9647	9660
		S/T	0.41	0.47	0.55	0.63	0.44	0.50	0.59	0.67	0.47	0.53	0.62	0.71	0.81	0.92	0.92	0.92
		PI	0.57	0.57	0.57	0.57	0.61	0.61	0.61	0.61	0.64	0.64	0.64	0.68	0.68	0.68	0.68	0.68
	41	TC	8124	11001	8144	8155	8612	8622	8633	8643	9127	9139	9150	9726	9740	9751	9765	9778
		S/T	0.42	0.47	0.56	0.63	0.44	0.50	0.59	0.67	0.47	0.53	0.62	0.71	0.81	0.92	0.92	0.92
		PI	0.54	0.54	0.54	0.54	0.57	0.57	0.57	0.57	0.60	0.60	0.60	0.64	0.64	0.64	0.64	0.64
	50	TC	8161	11001	8182	8193	8652	8662	8672	8683	9169	9181	9193	9768	9782	9794	9807	9821
		S/T	0.42	0.48	0.56	0.64	0.44	0.51	0.59	0.67	0.47	0.54	0.63	0.71	0.81	0.92	0.92	0.92
		PI	0.51	0.51	0.51	0.51	0.54	0.54	0.54	0.54	0.57	0.57	0.57	0.60	0.61	0.61	0.61	0.61
	59	TC	8139	11001	8159	8170	8629	8639	8649	8659	9144	9156	9168	9743	9757	9769	9782	9796
		S/T	0.42	0.48	0.56	0.64	0.45	0.51	0.59	0.68	0.47	0.54	0.63	0.72	0.82	0.92	0.92	0.92
		PI	0.54	0.54	0.54	0.54	0.57	0.58	0.58	0.58	0.61	0.61	0.61	0.64	0.65	0.65	0.65	0.65
	68	TC	8117	11001	8137	8148	8605	8615	8626	8636	9119	9131	9143	9718	9732	9744	9757	9771
		S/T	0.42	0.48	0.56	0.64	0.45	0.51	0.60	0.68	0.47	0.54	0.63	0.72	0.82	0.92	0.92	0.92
		PI	0.58	0.58	0.58	0.58	0.61	0.61	0.61	0.61	0.65	0.65	0.65	0.69	0.69	0.69	0.69	0.69
	77	TC	8095	11001	8115	8126	8582	8592	8602	8612	9095	9106	9118	9693	9707	9719	9733	9746
		S/T	0.43	0.49	0.58	0.66	0.46	0.52	0.61	0.70	0.49	0.56	0.65	0.74	0.84	0.96	1.00	1.00
		PI	0.61	0.61	0.61	0.61	0.65	0.65	0.65	0.65	0.69	0.69	0.69	0.73	0.73	0.73	0.73	0.73
	86	TC	8918	11001	8940	8952	9454	9465	9476	9487	10019	10032	10045	10620	10634	10646	10659	10673
		S/T	0.44	0.50	0.59	0.67	0.47	0.53	0.62	0.71	0.49	0.56	0.66	0.75	0.86	0.98	1.00	1.00
		PI	0.86	0.86	0.86	0.87	0.91	0.92	0.92	0.92	0.97	0.97	0.97	1.03	1.03	1.03	1.03	1.03
	95	TC	9091	11001	9113	9125	9637	9648	9660	9671	10213	10226	10240	10815	10829	10840	10854	10867
		S/T	0.45	0.51	0.60	0.69	0.48	0.54	0.64	0.73	0.51	0.58	0.68	0.77	0.88	1.00	1.00	1.00
		PI	0.95	0.95	0.95	0.95	1.00	1.00	1.01	1.01	1.06	1.06	1.07	1.13	1.13	1.13	1.13	1.13
	104	TC	8051	11001	8071	8082	8535	8545	8555	8566	9045	9057	9069	9644	9658	9670	9683	9697
		S/T	0.47	0.54	0.63	0.72	0.50	0.57	0.67	0.76	0.53	0.61	0.71	0.81	0.92	1.00	1.00	1.00
		PI	0.92	0.92	0.92	0.92	0.97	0.98	0.98	0.98	1.03	1.03	1.03	1.09	1.10	1.10	1.10	1.10
	114.8	TC	7131	11001	7148	7158	7559	7568	7577	7586	8011	8022	8032	8607	8621	8633	8646	8660
		S/T	0.48	0.55	0.64	0.73	0.51	0.58	0.68	0.77	0.54	0.61	0.72	0.82	0.93	1.00	1.00	1.00
		PI	0.89	0.89	0.89	0.89	0.95	0.95	0.95	0.95	1.00	1.00	1.00	1.06	1.06	1.07	1.07	1.07
	122	TC	6315	11001	6331	6340	6695	6703	6711	6719	7095	7104	7114	7740	7755	7768	7782	7797
		S/T	0.50	0.57	0.66	0.75	0.53	0.60	0.70	0.80	0.56	0.64	0.74	0.85	0.97	1.00	1.00	1.00
		PI	0.87	0.87	0.87	0.87	0.92	0.92	0.92	0.92	0.97	0.97	0.97	1.03	1.03	1.03	1.03	1.03

Manufacturer reserves the right to change, at any time, specifications and designs without notice and without obligations.

One-Way Cassette (Sheet 2 of 4)

12K COOLING PERFORMANCE																		
AIRFLOW (CFM)	OUTDOOR DB (°F)	ID WB (°F)	60.8				64.4				66.2				71.6			
		ID DB (°F)	73.4	77.0	80.6	84.2	73.4	77.0	80.6	84.2	73.4	77.0	80.6	84.20	73.4	77.0	80.6	84.2
282	-22	TC	12548	11001	12579	12596	13308	13321	13334	13347	13959	13974	13989	14639	14655	14668	14683	14699
		S/T	0.44	0.50	0.58	0.66	0.46	0.53	0.62	0.70	0.49	0.56	0.66	0.75	0.85	0.97	1.00	1.00
		PI	0.11	0.11	0.11	0.11	0.12	0.12	0.12	0.12	0.12	0.13	0.13	0.13	0.13	0.13	0.13	0.13
	-10	TC	11343	11001	11371	11387	12028	12041	12054	12067	12679	12694	12709	13359	13375	13388	13403	13419
		S/T	0.44	0.50	0.59	0.67	0.47	0.53	0.62	0.71	0.49	0.56	0.66	0.75	0.86	0.98	1.00	1.00
		PI	0.26	0.26	0.26	0.26	0.27	0.27	0.27	0.27	0.29	0.29	0.29	0.31	0.31	0.31	0.31	0.31
	0	TC	10340	11001	10365	10379	10961	10974	10987	11000	11612	11627	11642	12292	12308	12322	12337	12352
		S/T	0.44	0.50	0.59	0.67	0.47	0.54	0.63	0.71	0.50	0.57	0.66	0.76	0.86	0.98	1.00	1.00
		PI	0.38	0.38	0.38	0.38	0.40	0.40	0.40	0.40	0.43	0.43	0.43	0.45	0.45	0.45	0.45	0.45
	5	TC	9838	11001	9862	9875	10428	10441	10454	10467	11079	11094	11109	11759	11775	11788	11804	11819
		S/T	0.44	0.51	0.59	0.68	0.47	0.54	0.63	0.72	0.50	0.57	0.67	0.76	0.86	0.99	1.00	1.00
		PI	0.44	0.44	0.44	0.44	0.47	0.47	0.47	0.47	0.49	0.49	0.50	0.52	0.52	0.52	0.52	0.53
	14	TC	8935	11001	8957	8969	9468	9481	9494	9507	10119	10134	10149	10799	10815	10828	10844	10859
		S/T	0.45	0.51	0.60	0.68	0.47	0.54	0.63	0.72	0.50	0.57	0.67	0.76	0.87	0.99	1.00	1.00
		PI	0.55	0.55	0.55	0.55	0.58	0.58	0.58	0.58	0.62	0.62	0.62	0.65	0.65	0.65	0.66	0.66
	23	TC	8633	11001	8655	8666	9148	9161	9174	9187	9799	9814	9829	10479	10495	10508	10524	10539
		S/T	0.45	0.51	0.60	0.68	0.48	0.54	0.63	0.72	0.50	0.57	0.67	0.77	0.87	1.00	1.00	1.00
		PI	0.60	0.60	0.60	0.60	0.63	0.64	0.64	0.64	0.67	0.67	0.67	0.71	0.71	0.71	0.71	0.72
	32	TC	8992	11001	9014	9026	9529	9542	9555	9568	10180	10195	10210	10860	10876	10890	10905	10920
		S/T	0.45	0.51	0.60	0.69	0.48	0.54	0.64	0.73	0.51	0.58	0.68	0.77	0.88	1.00	1.00	1.00
		PI	0.62	0.62	0.62	0.62	0.66	0.66	0.66	0.66	0.69	0.70	0.70	0.74	0.74	0.74	0.74	0.74
	41	TC	9118	11001	9140	9152	9663	9676	9688	9701	10314	10329	10344	10994	11010	11023	11038	11053
		S/T	0.45	0.52	0.60	0.69	0.48	0.55	0.64	0.73	0.51	0.58	0.68	0.77	0.88	1.00	1.00	1.00
		PI	0.58	0.58	0.58	0.58	0.62	0.62	0.62	0.62	0.65	0.65	0.66	0.69	0.69	0.69	0.69	0.70
	50	TC	9163	11001	9185	9198	9710	9723	9736	9749	10361	10376	10391	11041	11057	11071	11086	11101
		S/T	0.46	0.52	0.61	0.69	0.48	0.55	0.64	0.73	0.51	0.58	0.68	0.78	0.89	1.00	1.00	1.00
		PI	0.55	0.55	0.55	0.55	0.58	0.58	0.59	0.59	0.62	0.62	0.62	0.65	0.66	0.66	0.66	0.66
	59	TC	9136	11001	9159	9171	9682	9695	9708	9721	10333	10348	10363	11013	11029	11043	11058	11073
		S/T	0.46	0.52	0.61	0.70	0.49	0.55	0.65	0.74	0.51	0.59	0.69	0.78	0.89	1.00	1.00	1.00
		PI	0.59	0.59	0.59	0.59	0.62	0.62	0.62	0.62	0.66	0.66	0.66	0.70	0.70	0.70	0.70	0.70
	68	TC	9110	11001	9132	9144	9654	9667	9680	9693	10305	10320	10335	10985	11001	11015	11030	11045
		S/T	0.46	0.52	0.61	0.70	0.49	0.56	0.65	0.74	0.52	0.59	0.69	0.79	0.90	1.00	1.00	1.00
		PI	0.62	0.62	0.63	0.63	0.66	0.66	0.66	0.66	0.70	0.70	0.70	0.74	0.74	0.74	0.74	0.75
	77	TC	9083	11001	9106	9118	9626	9639	9652	9665	10277	10292	10307	10957	10973	10986	11002	11017
		S/T	0.47	0.54	0.63	0.72	0.50	0.57	0.67	0.76	0.53	0.60	0.71	0.81	0.92	1.00	1.00	1.00
		PI	0.66	0.66	0.66	0.66	0.70	0.70	0.70	0.70	0.74	0.74	0.74	0.79	0.79	0.79	0.79	0.79
	86	TC	10069	11001	10094	10107	10674	10687	10699	10712	11325	11340	11355	12005	12021	12034	12049	12064
		S/T	0.48	0.55	0.64	0.73	0.51	0.58	0.68	0.77	0.54	0.61	0.72	0.82	0.93	1.00	1.00	1.00
		PI	0.93	0.94	0.94	0.94	0.99	0.99	0.99	0.99	1.05	1.05	1.05	1.11	1.11	1.11	1.12	1.12
	95	TC	10276	11001	10301	10315	10894	10907	10920	10933	11545	11560	11575	12225	12241	12254	12269	12284
		S/T	0.49	0.56	0.65	0.75	0.52	0.59	0.69	0.79	0.55	0.63	0.74	0.84	0.96	1.00	1.00	1.00
		PI	1.03	1.03	1.03	1.03	1.09	1.09	1.09	1.09	1.15	1.15	1.15	1.22	1.22	1.22	1.22	1.23
	104	TC	9031	11001	9053	9065	9570	9583	9596	9609	10221	10236	10251	10901	10917	10931	10946	10961
		S/T	0.52	0.59	0.69	0.78	0.55	0.62	0.73	0.83	0.58	0.66	0.77	0.88	1.00	1.00	1.00	1.00
		PI	0.99	1.00	1.00	1.00	1.05	1.06	1.06	1.06	1.12	1.12	1.12	1.19	1.19	1.19	1.19	1.19
	114.8	TC	7928	11001	7947	7958	8398	8411	8424	8437	9049	9064	9079	9729	9745	9759	9774	9789
		S/T	0.52	0.59	0.70	0.79	0.55	0.63	0.74	0.84	0.59	0.67	0.78	0.89	1.00	1.00	1.00	1.00
		PI	0.97	0.97	0.97	0.97	1.02	1.02	1.03	1.03	1.08	1.09	1.09	1.15	1.15	1.15	1.16	1.16
	122	TC	6896	11001	6913	6923	7300	7314	7328	7342	8009	8025	8041	8749	8766	8780	8797	8814
		S/T	0.54	0.62	0.72	0.82	0.57	0.65	0.76	0.87	0.61	0.69	0.81	0.92	1.00	1.00	1.00	1.00
		PI	0.94	0.94	0.94	0.94	0.99	0.99	1.00	1.00	1.05	1.05	1.06	1.11	1.12	1.12	1.12	1.12

Manufacturer reserves the right to change, at any time, specifications and designs without notice and without obligations.

One-Way Cassette (Sheet 3 of 4)

12K COOLING PERFORMANCE																		
AIRFLOW (CFM)	OUTDOOR DB (°F)	ID WB (°F)	60.8				64.4				66.2				71.6			
		ID DB (°F)	73.4	77.0	80.6	84.2	73.4	77.0	80.6	84.2	73.4	77.0	80.6	84.20	73.4	77.0	80.6	84.2
310	-22	TC	13657	11001	13691	13709	14484	14498	14512	14527	15193	15209	15226	15933	15950	15965	15981	15998
		S/T	0.48	0.54	0.63	0.72	0.50	0.58	0.67	0.77	0.53	0.61	0.71	0.81	0.93	1.00	1.00	1.00
		PI	0.12	0.12	0.12	0.12	0.13	0.13	0.13	0.13	0.14	0.14	0.14	0.14	0.14	0.14	0.14	0.14
	-10	TC	12346	11001	12377	12393	13091	13105	13119	13133	13800	13816	13832	14540	14557	14572	14588	14605
		S/T	0.48	0.55	0.64	0.73	0.51	0.58	0.68	0.77	0.54	0.61	0.72	0.82	0.93	1.00	1.00	1.00
		PI	0.28	0.28	0.28	0.28	0.30	0.30	0.30	0.30	0.31	0.31	0.32	0.33	0.33	0.33	0.33	0.33
	0	TC	11254	11001	11282	11297	11930	11944	11959	11973	12639	12655	12672	13379	13396	13411	13427	13444
		S/T	0.48	0.55	0.64	0.73	0.51	0.58	0.68	0.78	0.54	0.62	0.72	0.82	0.94	1.00	1.00	1.00
		PI	0.41	0.41	0.41	0.41	0.44	0.44	0.44	0.44	0.46	0.46	0.46	0.49	0.49	0.49	0.49	0.49
	5	TC	10708	11001	10734	10749	11350	11364	11378	11392	12058	12075	12091	12799	12816	12830	12847	12864
		S/T	0.48	0.55	0.64	0.73	0.51	0.58	0.68	0.78	0.54	0.62	0.72	0.83	0.94	1.00	1.00	1.00
		PI	0.48	0.48	0.48	0.48	0.51	0.51	0.51	0.51	0.54	0.54	0.54	0.57	0.57	0.57	0.57	0.57
	14	TC	9724	11001	9748	9762	10305	10319	10333	10347	11014	11030	11046	11754	11771	11786	11802	11819
		S/T	0.49	0.55	0.65	0.74	0.51	0.59	0.69	0.78	0.55	0.62	0.73	0.83	0.95	1.00	1.00	1.00
		PI	0.60	0.60	0.60	0.60	0.63	0.63	0.64	0.64	0.67	0.67	0.67	0.71	0.71	0.71	0.71	0.71
	23	TC	9397	11001	9420	9433	9957	9971	9985	9999	10665	10682	10698	11406	11423	11437	11454	11471
		S/T	0.49	0.56	0.65	0.74	0.52	0.59	0.69	0.79	0.55	0.63	0.73	0.83	0.95	1.00	1.00	1.00
		PI	0.65	0.65	0.65	0.65	0.69	0.69	0.69	0.69	0.73	0.73	0.73	0.78	0.78	0.78	0.78	0.78
	32	TC	9787	11001	9811	9824	10372	10386	10400	10414	11080	11097	11113	11820	11838	11852	11869	11885
		S/T	0.49	0.56	0.65	0.75	0.52	0.59	0.69	0.79	0.55	0.63	0.74	0.84	0.96	1.00	1.00	1.00
		PI	0.67	0.67	0.67	0.68	0.71	0.71	0.72	0.72	0.76	0.76	0.76	0.80	0.80	0.80	0.80	0.80
	41	TC	9924	11001	9948	9962	10517	10531	10545	10559	11225	11242	11258	11966	11983	11997	12014	12031
		S/T	0.49	0.56	0.66	0.75	0.52	0.60	0.70	0.79	0.55	0.63	0.74	0.84	0.96	1.00	1.00	1.00
		PI	0.63	0.63	0.63	0.64	0.67	0.67	0.67	0.67	0.71	0.71	0.71	0.75	0.75	0.75	0.76	0.76
	50	TC	9973	11001	9997	10011	10569	10583	10597	10611	11277	11294	11310	12018	12035	12049	12066	12083
		S/T	0.50	0.57	0.66	0.75	0.53	0.60	0.70	0.80	0.56	0.63	0.74	0.85	0.96	1.00	1.00	1.00
		PI	0.60	0.60	0.60	0.60	0.64	0.64	0.64	0.64	0.67	0.67	0.67	0.71	0.71	0.71	0.72	0.72
	59	TC	9944	11001	9968	9982	10538	10552	10566	10581	11247	11263	11280	11987	12004	12019	12035	12052
		S/T	0.50	0.57	0.66	0.76	0.53	0.60	0.70	0.80	0.56	0.64	0.75	0.85	0.97	1.00	1.00	1.00
		PI	0.64	0.64	0.64	0.64	0.68	0.68	0.68	0.68	0.72	0.72	0.72	0.76	0.76	0.76	0.76	0.76
	68	TC	9915	11001	9940	9953	10508	10522	10536	10550	11216	11233	11249	11956	11974	11988	12005	12021
		S/T	0.50	0.57	0.67	0.76	0.53	0.60	0.71	0.81	0.56	0.64	0.75	0.86	0.97	1.00	1.00	1.00
		PI	0.68	0.68	0.68	0.68	0.72	0.72	0.72	0.72	0.76	0.76	0.76	0.81	0.81	0.81	0.81	0.81
	77	TC	9886	11001	9911	9924	10477	10491	10505	10519	11186	11202	11218	11926	11943	11958	11974	11991
		S/T	0.51	0.59	0.69	0.78	0.54	0.62	0.73	0.83	0.58	0.66	0.77	0.88	1.00	1.00	1.00	1.00
		PI	0.72	0.72	0.72	0.72	0.76	0.76	0.76	0.76	0.81	0.81	0.81	0.86	0.86	0.86	0.86	0.86
	86	TC	10959	11001	10986	11001	11617	11631	11645	11659	12326	12342	12358	13066	13083	13098	13114	13131
		S/T	0.52	0.59	0.69	0.79	0.55	0.63	0.74	0.84	0.59	0.67	0.78	0.89	1.00	1.00	1.00	1.00
		PI	1.02	1.02	1.02	1.02	1.08	1.08	1.08	1.08	1.14	1.14	1.15	1.21	1.21	1.21	1.21	1.22
	95	TC	11185	11001	11212	11227	11857	11871	11885	11899	12565	12582	12598	13306	13323	13337	13354	13371
		S/T	0.53	0.61	0.71	0.81	0.57	0.65	0.75	0.86	0.60	0.68	0.80	0.91	0.64	0.74	0.85	0.97
		PI	1.12	1.12	1.12	1.12	1.18	1.18	1.19	1.19	1.25	1.26	1.26	1.33	1.33	1.33	1.33	1.33
	104	TC	9829	11001	9853	9867	10416	10430	10445	10459	11125	11141	11158	11865	11882	11897	11914	11930
		S/T	0.56	0.64	0.75	0.85	0.59	0.68	0.79	0.90	0.63	0.72	0.84	0.96	1.00	1.00	1.00	1.00
		PI	1.08	1.08	1.09	1.09	1.15	1.15	1.15	1.15	1.22	1.22	1.22	1.29	1.29	1.29	1.30	1.30
	114.8	TC	8629	11001	8650	8662	9141	9155	9169	9183	9849	9866	9882	10589	10607	10621	10638	10654
		S/T	0.57	0.65	0.76	0.86	0.60	0.69	0.80	0.91	0.64	0.73	0.85	0.97	1.00	1.00	1.00	1.00
		PI	1.05	1.05	1.05	1.05	1.11	1.12	1.12	1.12	1.18	1.18	1.18	1.25	1.25	1.26	1.26	1.26
	122	TC	7565	11001	7584	7594	8011	8025	8039	8053	8719	8736	8752	9460	9477	9491	9508	9525
		S/T	0.59	0.67	0.78	0.89	0.62	0.71	0.83	0.95	0.66	0.75	0.88	1.00	1.00	1.00	1.00	1.00
		PI	1.02	1.02	1.02	1.02	1.08	1.08	1.08	1.08	1.15	1.15	1.15	1.21	1.21	1.22	1.22	1.22

TC: Total Cooling Capacity (BTU/hr)

S/T: Sensible Cooling Capacity Ratio

PI: Power Input (kW)

Extrapolated Data

One-Way Cassette (Sheet 4 of 4)

12K COOLING PERFORMANCE																		
AIRFLOW (CFM)	OUTDOOR DB (°F)	ID WB (°F)	60.8				64.4				66.2				71.6			
		ID DB (°F)	73.4	77.0	80.6	84.2	73.4	77.0	80.6	84.2	73.4	77.0	80.6	84.20	73.4	77.0	80.6	84.2
352	-22	TC	15197	11001	15234	15255	16110	16129	16148	16167	17073	17095	17117	18078	18102	18122	18144	18167
		S/T	0.54	0.61	0.71	0.81	0.57	0.65	0.76	0.86	0.60	0.69	0.80	0.91	1.00	1.00	1.00	1.00
		PI	0.14	0.14	0.14	0.14	0.14	0.14	0.14	0.14	0.15	0.15	0.15	0.16	0.16	0.16	0.16	0.16
	-10	TC	13806	11001	13840	13859	14636	14653	14671	14688	15511	15531	15551	16424	16446	16464	16484	16505
		S/T	0.54	0.61	0.72	0.82	0.57	0.65	0.76	0.87	0.61	0.69	0.81	0.92	1.00	1.00	1.00	1.00
		PI	0.31	0.32	0.32	0.32	0.33	0.33	0.33	0.33	0.35	0.35	0.35	0.37	0.37	0.38	0.38	0.38
	0	TC	12648	11001	12679	12696	13408	13424	13440	13456	14209	14227	14246	15046	15066	15082	15101	15120
		S/T	0.54	0.62	0.72	0.82	0.57	0.65	0.77	0.87	0.61	0.69	0.81	0.93	1.00	1.00	1.00	1.00
		PI	0.46	0.46	0.46	0.47	0.49	0.49	0.49	0.49	0.52	0.52	0.52	0.55	0.55	0.55	0.55	0.55
	5	TC	12068	11001	12098	12114	12794	12809	12824	12839	13558	13576	13593	14357	14375	14391	14409	14427
		S/T	0.54	0.62	0.72	0.83	0.58	0.66	0.77	0.88	0.61	0.70	0.81	0.93	1.00	1.00	1.00	1.00
		PI	0.54	0.54	0.54	0.54	0.57	0.57	0.57	0.57	0.60	0.61	0.61	0.64	0.64	0.64	0.64	0.64
	14	TC	11025	11001	11053	11068	11688	11702	11716	11730	12387	12403	12419	13116	13133	13148	13164	13180
		S/T	0.55	0.62	0.73	0.83	0.58	0.66	0.77	0.88	0.61	0.70	0.82	0.93	1.00	1.00	1.00	1.00
		PI	0.67	0.67	0.67	0.67	0.71	0.71	0.71	0.71	0.75	0.76	0.76	0.80	0.80	0.80	0.80	0.80
	23	TC	10678	11001	10704	10719	11320	11333	11347	11360	11996	12012	12027	12703	12719	12733	12749	12765
		S/T	0.55	0.63	0.73	0.83	0.58	0.66	0.78	0.88	0.62	0.70	0.82	0.94	1.00	1.00	1.00	1.00
		PI	0.73	0.73	0.73	0.74	0.78	0.78	0.78	0.78	0.82	0.82	0.83	0.87	0.87	0.87	0.87	0.88
	32	TC	11092	11001	11119	11134	11759	11772	11786	11800	12461	12477	12494	13195	13212	13227	13243	13260
		S/T	0.55	0.63	0.74	0.84	0.58	0.67	0.78	0.89	0.62	0.71	0.83	0.94	1.00	1.00	1.00	1.00
		PI	0.76	0.76	0.76	0.76	0.80	0.80	0.80	0.80	0.85	0.85	0.85	0.90	0.90	0.90	0.90	0.90
	41	TC	11237	11001	11265	11280	11912	11926	11940	11955	12624	12640	12657	13368	13385	13400	13416	13433
		S/T	0.55	0.63	0.74	0.84	0.59	0.67	0.78	0.89	0.62	0.71	0.83	0.95	1.00	1.00	1.00	1.00
		PI	0.71	0.71	0.71	0.71	0.75	0.76	0.76	0.76	0.80	0.80	0.80	0.85	0.85	0.85	0.85	0.85
	50	TC	11289	11001	11317	11332	11967	11981	11996	12010	12682	12699	12715	13429	13447	13461	13478	13495
		S/T	0.56	0.64	0.74	0.85	0.59	0.67	0.79	0.90	0.63	0.71	0.83	0.95	1.00	1.00	1.00	1.00
		PI	0.67	0.67	0.68	0.68	0.71	0.72	0.72	0.72	0.76	0.76	0.76	0.80	0.80	0.80	0.80	0.81
	59	TC	11258	11001	11286	11301	11935	11949	11963	11977	12648	12664	12681	13393	13411	13425	13442	13459
		S/T	0.56	0.64	0.75	0.85	0.59	0.68	0.79	0.90	0.63	0.72	0.84	0.96	1.00	1.00	1.00	1.00
		PI	0.72	0.72	0.72	0.72	0.76	0.76	0.76	0.76	0.81	0.81	0.81	0.85	0.86	0.86	0.86	0.86
	68	TC	11228	11001	11255	11271	11903	11917	11931	11945	12614	12630	12647	13357	13374	13389	13405	13422
		S/T	0.56	0.64	0.75	0.86	0.60	0.68	0.80	0.91	0.63	0.72	0.84	0.96	1.00	1.00	1.00	1.00
		PI	0.76	0.76	0.77	0.77	0.81	0.81	0.81	0.81	0.86	0.86	0.86	0.91	0.91	0.91	0.91	0.91
	77	TC	11197	11001	11225	11240	11870	11884	11898	11912	12579	12596	12612	13320	13338	13352	13369	13386
		S/T	0.58	0.66	0.77	0.88	0.61	0.70	0.82	0.93	0.65	0.74	0.87	0.99	1.00	1.00	1.00	1.00
		PI	0.81	0.81	0.81	0.81	0.86	0.86	0.86	0.86	0.91	0.91	0.91	0.96	0.96	0.96	0.96	0.97
	86	TC	12335	11001	12366	12382	13076	13092	13107	13123	13858	13876	13894	14674	14693	14709	14728	14746
		S/T	0.59	0.67	0.78	0.89	0.62	0.71	0.83	0.94	0.66	0.75	0.88	1.00	1.00	1.00	1.00	1.00
		PI	1.14	1.14	1.15	1.15	1.21	1.21	1.21	1.22	1.28	1.29	1.29	1.36	1.36	1.36	1.36	1.37
	95	TC	12574	11001	12605	12622	13330	13346	13362	13377	14126	14145	14163	14959	14978	14994	15013	15032
		S/T	0.60	0.68	0.80	0.91	0.64	0.73	0.85	0.97	0.67	0.75	0.90	1.00	1.00	1.00	1.00	1.00
		PI	1.25	1.26	1.26	1.26	1.33	1.33	1.33	1.33	1.41	1.41	1.41	1.49	1.49	1.50	1.50	1.50
	104	TC	11137	11001	11164	11179	11806	11820	11834	11848	12511	12528	12544	13248	13266	13280	13297	13313
		S/T	0.63	0.72	0.84	0.96	0.67	0.75	0.89	1.00	0.71	0.75	0.94	1.00	1.00	1.00	1.00	1.00
		PI	1.22	1.22	1.22	1.22	1.29	1.29	1.29	1.30	1.37	1.37	1.37	1.45	1.45	1.45	1.45	1.46
	114.8	TC	9863	11001	9888	9901	10456	10468	10481	10493	11081	11095	11110	11734	11749	11762	11776	11791
		S/T	0.64	0.73	0.85	0.97	0.68	0.75	0.90	1.00	0.72	0.75	0.96	1.00	1.00	1.00	1.00	1.00
		PI	1.18	1.18	1.18	1.19	1.25	1.25	1.26	1.26	1.33	1.33	1.33	1.41	1.41	1.41	1.41	1.41
	122	TC	8736	11001	8757	8769	9261	9272	9283	9294	9814	9827	9839	10392	10406	10417	10430	10443
		S/T	0.66	0.75	0.88	1.00	0.70	0.75	0.93	1.00	0.74	0.75	0.99	1.00	1.00	1.00	1.00	1.00
		PI	1.15	1.15	1.15	1.15	1.22	1.22	1.22	1.22	1.29	1.29	1.29	1.36	1.37	1.37	1.37	1.37

Manufacturer reserves the right to change, at any time, specifications and designs without notice and without obligations.

One-Way Cassette (Sheet 1 of 4)

18K COOLING PERFORMANCE																		
AIRFLOW (CFM)	OUTDOOR DB (°F)	ID WB (°F)	60.8				64.4				66.2				71.6			
		ID DB (°F)	73.4	77.0	80.6	84.2	73.4	77.0	80.6	84.2	73.4	77.0	80.6	84.2	73.4	77.0	80.6	84.2
489	-22	TC	12858	12876	12890	12908	13631	13647	13664	13680	14446	14465	14483	15164	15181	15195	15211	15227
		S/T	0.37	0.43	0.50	0.57	0.40	0.45	0.53	0.60	0.42	0.48	0.56	0.64	0.73	0.83	0.89	0.89
		PI	0.34	0.34	0.34	0.34	0.36	0.36	0.36	0.36	0.38	0.38	0.38	0.41	0.41	0.41	0.41	0.41
	-10	TC	12407	12876	12438	12455	13153	13169	13184	13200	13939	13957	13975	14656	14673	14687	14703	14719
		S/T	0.38	0.43	0.50	0.57	0.40	0.46	0.53	0.61	0.42	0.48	0.56	0.64	0.73	0.84	0.89	0.89
		PI	0.40	0.40	0.40	0.40	0.43	0.43	0.43	0.43	0.45	0.45	0.45	0.48	0.48	0.48	0.48	0.48
	0	TC	12032	12876	12061	12077	12755	12770	12785	12800	13517	13534	13552	14233	14250	14264	14279	14295
		S/T	0.38	0.43	0.51	0.58	0.40	0.46	0.54	0.61	0.43	0.49	0.57	0.65	0.74	0.84	0.89	0.89
		PI	0.45	0.45	0.45	0.45	0.48	0.48	0.48	0.48	0.51	0.51	0.51	0.54	0.54	0.54	0.54	0.54
	5	TC	11844	12876	11873	11889	12555	12570	12585	12600	13306	13323	13340	14021	14038	14052	14068	14084
		S/T	0.38	0.43	0.51	0.58	0.40	0.46	0.54	0.61	0.43	0.49	0.57	0.65	0.74	0.84	0.89	0.89
		PI	0.48	0.48	0.48	0.48	0.51	0.51	0.51	0.51	0.54	0.54	0.54	0.57	0.57	0.57	0.57	0.57
	14	TC	11505	12876	11534	11549	12197	12211	12226	12240	12926	12942	12959	13640	13657	13671	13687	13703
		S/T	0.38	0.44	0.51	0.58	0.40	0.46	0.54	0.62	0.43	0.49	0.57	0.65	0.74	0.85	0.89	0.89
		PI	0.52	0.52	0.52	0.52	0.55	0.55	0.56	0.56	0.59	0.59	0.59	0.62	0.62	0.62	0.62	0.62
	23	TC	11393	12876	11421	11436	12077	12092	12106	12120	12799	12816	12832	13513	13530	13544	13560	13576
		S/T	0.38	0.44	0.51	0.58	0.41	0.46	0.54	0.62	0.43	0.49	0.58	0.66	0.75	0.85	0.89	0.89
		PI	0.55	0.55	0.55	0.55	0.59	0.59	0.59	0.59	0.62	0.62	0.62	0.66	0.66	0.66	0.66	0.66
	32	TC	11149	12876	11177	11192	11819	11833	11847	11861	12526	12542	12558	13239	13256	13270	13286	13302
		S/T	0.39	0.44	0.51	0.59	0.41	0.47	0.55	0.62	0.43	0.49	0.58	0.66	0.75	0.86	0.89	0.89
		PI	0.58	0.58	0.58	0.58	0.61	0.61	0.61	0.61	0.65	0.65	0.65	0.68	0.69	0.69	0.69	0.69
	41	TC	11002	12876	11029	11044	11663	11677	11691	11705	12360	12376	12392	13073	13090	13104	13120	13136
		S/T	0.39	0.44	0.52	0.59	0.41	0.47	0.55	0.62	0.44	0.50	0.58	0.66	0.76	0.86	0.89	0.89
		PI	0.63	0.63	0.63	0.63	0.67	0.67	0.67	0.67	0.71	0.71	0.71	0.75	0.75	0.75	0.75	0.75
	50	TC	11010	12876	11037	11052	11672	11685	11699	11713	12369	12385	12401	13082	13099	13113	13129	13145
		S/T	0.39	0.44	0.52	0.59	0.41	0.47	0.55	0.63	0.44	0.50	0.58	0.67	0.76	0.87	0.89	0.89
		PI	0.69	0.69	0.70	0.70	0.74	0.74	0.74	0.74	0.78	0.78	0.78	0.83	0.83	0.83	0.83	0.83
	59	TC	11329	12876	11357	11373	12010	12025	12039	12053	12728	12745	12761	13442	13459	13473	13489	13505
		S/T	0.39	0.45	0.52	0.60	0.42	0.47	0.55	0.63	0.44	0.50	0.59	0.67	0.76	0.87	0.89	0.89
		PI	0.74	0.74	0.74	0.74	0.78	0.78	0.78	0.78	0.83	0.83	0.83	0.88	0.88	0.88	0.88	0.88
	68	TC	11649	12876	11678	11693	12349	12364	12378	12393	13087	13104	13121	13802	13819	13833	13849	13865
		S/T	0.39	0.45	0.52	0.60	0.42	0.48	0.56	0.63	0.44	0.50	0.59	0.67	0.77	0.87	0.89	0.89
		PI	0.78	0.78	0.78	0.78	0.83	0.83	0.83	0.83	0.88	0.88	0.88	0.93	0.93	0.93	0.93	0.93
	77	TC	11969	12876	11998	12014	12688	12703	12718	12733	13446	13464	13481	14162	14179	14193	14209	14225
		S/T	0.40	0.46	0.54	0.61	0.43	0.49	0.57	0.65	0.45	0.52	0.61	0.69	0.79	0.90	1.00	1.00
		PI	0.83	0.83	0.83	0.83	0.87	0.88	0.88	0.88	0.93	0.93	0.93	0.98	0.98	0.98	0.99	0.99
	86	TC	10790	12876	10817	10832	11439	11452	11466	11480	12122	12138	12154	12835	12852	12866	12882	12898
		S/T	0.41	0.47	0.55	0.62	0.43	0.49	0.58	0.66	0.46	0.52	0.61	0.70	0.80	0.91	1.00	1.00
		PI	1.15	1.15	1.15	1.15	1.22	1.22	1.22	1.22	1.29	1.29	1.29	1.37	1.37	1.37	1.37	1.37
	95	TC	10764	12876	10791	10805	11411	11425	11438	11452	12093	12109	12125	12806	12822	12836	12852	12868
		S/T	0.42	0.48	0.56	0.64	0.45	0.51	0.59	0.68	0.47	0.54	0.63	0.72	0.82	0.93	1.00	1.00
		PI	1.26	1.26	1.26	1.26	1.33	1.33	1.34	1.34	1.41	1.41	1.42	1.50	1.50	1.50	1.50	1.50
	104	TC	8962	12876	8984	8996	9500	9512	9523	9534	10068	10081	10094	10775	10792	10806	10822	10838
		S/T	0.44	0.50	0.59	0.67	0.47	0.53	0.62	0.71	0.50	0.56	0.66	0.75	0.86	0.98	1.00	1.00
		PI	1.19	1.19	1.19	1.19	1.26	1.26	1.26	1.26	1.33	1.34	1.34	1.42	1.42	1.42	1.42	1.42
	114.8	TC	7461	12876	7480	7490	7910	7919	7928	7938	8382	8393	8404	9085	9102	9116	9132	9148
		S/T	0.45	0.51	0.59	0.68	0.47	0.54	0.63	0.72	0.50	0.57	0.67	0.76	0.87	0.99	1.00	1.00
		PI	1.12	1.12	1.12	1.13	1.19	1.19	1.19	1.19	1.26	1.26	1.26	1.34	1.34	1.34	1.34	1.35
	122	TC	6212	12876	6227	6235	6585	6593	6601	6609	6979	6988	6997	7765	7783	7799	7817	7835
		S/T	0.46	0.53	0.62	0.70	0.49	0.56	0.65	0.74	0.52	0.59	0.69	0.79	0.90	1.00	1.00	1.00
		PI	1.06	1.06	1.06	1.06	1.12	1.12	1.13	1.13	1.19	1.19	1.19	1.26	1.26	1.26	1.27	1.27

Manufacturer reserves the right to change, at any time, specifications and designs without notice and without obligations.

One-Way Cassette (Sheet 2 of 4)

18K COOLING PERFORMANCE																		
AIRFLOW (CFM)	OUTDOOR DB (°F)	ID WB (°F)	60.8				64.4				66.2				71.6			
		ID DB (°F)	73.4	77.0	80.6	84.2	73.4	77.0	80.6	84.2	73.4	77.0	80.6	84.2	73.4	77.0	80.6	84.2
530	-22	TC	15427	12876	15465	15486	16360	16376	16393	16409	17171	17189	17208	18017	18037	18053	18072	18091
		S/T	0.42	0.48	0.56	0.64	0.45	0.51	0.60	0.68	0.47	0.54	0.63	0.72	0.82	0.94	1.00	1.00
		PI	0.38	0.38	0.38	0.38	0.41	0.41	0.41	0.41	0.43	0.43	0.43	0.46	0.46	0.46	0.46	0.46
	-10	TC	14859	12876	14895	14915	15757	15773	15789	15805	16567	16586	16604	17413	17433	17450	17469	17488
		S/T	0.43	0.48	0.57	0.65	0.45	0.51	0.60	0.68	0.48	0.54	0.64	0.73	0.83	0.94	1.00	1.00
		PI	0.45	0.45	0.45	0.45	0.48	0.48	0.48	0.48	0.51	0.51	0.51	0.54	0.54	0.54	0.54	0.54
	0	TC	14385	12876	14421	14440	15254	15270	15286	15302	16064	16083	16101	16910	16930	16947	16966	16985
		S/T	0.43	0.49	0.57	0.65	0.45	0.52	0.60	0.69	0.48	0.55	0.64	0.73	0.83	0.95	1.00	1.00
		PI	0.51	0.51	0.51	0.51	0.54	0.54	0.54	0.54	0.57	0.57	0.57	0.60	0.60	0.60	0.61	0.61
	5	TC	14149	12876	14183	14203	15002	15018	15034	15051	15813	15831	15850	16659	16679	16695	16714	16733
		S/T	0.43	0.49	0.57	0.65	0.45	0.52	0.61	0.69	0.48	0.55	0.64	0.73	0.83	0.95	1.00	1.00
		PI	0.54	0.54	0.54	0.54	0.57	0.57	0.57	0.57	0.60	0.60	0.60	0.64	0.64	0.64	0.64	0.64
	14	TC	13723	12876	13756	13775	14550	14566	14582	14598	15360	15378	15397	16206	16226	16243	16262	16281
		S/T	0.43	0.49	0.57	0.65	0.46	0.52	0.61	0.69	0.48	0.55	0.65	0.74	0.84	0.96	1.00	1.00
		PI	0.59	0.59	0.59	0.59	0.62	0.62	0.62	0.62	0.66	0.66	0.66	0.70	0.70	0.70	0.70	0.70
	23	TC	13581	12876	13614	13632	14399	14415	14431	14447	15209	15228	15246	16055	16075	16092	16111	16130
		S/T	0.43	0.49	0.58	0.66	0.46	0.52	0.61	0.70	0.49	0.55	0.65	0.74	0.84	0.96	1.00	1.00
		PI	0.62	0.62	0.62	0.62	0.66	0.66	0.66	0.66	0.70	0.70	0.70	0.74	0.74	0.74	0.74	0.74
	32	TC	13274	12876	13307	13325	14073	14089	14105	14121	14883	14902	14921	15730	15749	15766	15785	15804
		S/T	0.44	0.50	0.58	0.66	0.46	0.53	0.62	0.70	0.49	0.56	0.65	0.74	0.85	0.97	1.00	1.00
		PI	0.65	0.65	0.65	0.65	0.68	0.69	0.69	0.69	0.73	0.73	0.73	0.77	0.77	0.77	0.77	0.77
	41	TC	13089	12876	13121	13139	13876	13892	13908	13924	14686	14705	14724	15533	15552	15569	15588	15607
		S/T	0.44	0.50	0.58	0.66	0.46	0.53	0.62	0.70	0.49	0.56	0.66	0.75	0.85	0.97	1.00	1.00
		PI	0.71	0.71	0.71	0.71	0.75	0.75	0.75	0.75	0.80	0.80	0.80	0.84	0.84	0.84	0.85	0.85
	50	TC	13098	12876	13131	13148	13886	13903	13919	13935	14697	14715	14734	15543	15563	15579	15598	15617
		S/T	0.44	0.50	0.59	0.67	0.47	0.53	0.62	0.71	0.49	0.56	0.66	0.75	0.86	0.98	1.00	1.00
		PI	0.78	0.78	0.78	0.78	0.83	0.83	0.83	0.83	0.87	0.88	0.88	0.93	0.93	0.93	0.93	0.93
	59	TC	13501	12876	13534	13553	14314	14330	14346	14362	15124	15143	15162	15971	15991	16007	16026	16045
		S/T	0.44	0.50	0.59	0.67	0.47	0.53	0.62	0.71	0.50	0.57	0.66	0.75	0.86	0.98	1.00	1.00
		PI	0.83	0.83	0.83	0.83	0.88	0.88	0.88	0.88	0.93	0.93	0.93	0.98	0.99	0.99	0.99	0.99
	68	TC	13903	12876	13938	13957	14742	14758	14774	14790	15552	15571	15589	16398	16418	16435	16454	16473
		S/T	0.44	0.51	0.59	0.67	0.47	0.54	0.63	0.72	0.50	0.57	0.67	0.76	0.86	0.99	1.00	1.00
		PI	0.88	0.88	0.88	0.88	0.93	0.93	0.93	0.93	0.98	0.99	0.99	1.04	1.04	1.05	1.05	1.05
	77	TC	14306	12876	14341	14361	15170	15186	15202	15218	15980	15998	16017	16826	16846	16862	16881	16900
		S/T	0.46	0.52	0.61	0.69	0.48	0.55	0.64	0.73	0.51	0.58	0.68	0.78	0.89	1.00	1.00	1.00
		PI	0.93	0.93	0.93	0.93	0.98	0.98	0.98	0.98	1.04	1.04	1.04	1.10	1.10	1.10	1.11	1.11
	86	TC	12822	12876	12854	12871	13593	13609	13625	13641	14403	14422	14440	15249	15269	15286	15305	15324
		S/T	0.46	0.53	0.62	0.70	0.49	0.56	0.65	0.74	0.52	0.59	0.69	0.79	0.90	1.00	1.00	1.00
		PI	1.29	1.29	1.29	1.29	1.37	1.37	1.37	1.37	1.45	1.45	1.45	1.53	1.53	1.54	1.54	1.54
	95	TC	12789	12876	12821	12838	13558	13574	13590	13606	14368	14387	14406	15215	15234	15251	15270	15289
		S/T	0.47	0.54	0.63	0.72	0.50	0.57	0.67	0.76	0.53	0.61	0.71	0.81	0.92	1.00	1.00	1.00
		PI	1.41	1.41	1.41	1.42	1.49	1.50	1.50	1.50	1.58	1.59	1.59	1.68	1.68	1.68	1.68	1.69
	104	TC	10519	12876	10545	10559	11146	11162	11178	11194	11956	11975	11993	12802	12822	12839	12858	12877
		S/T	0.50	0.57	0.66	0.76	0.53	0.60	0.70	0.80	0.56	0.64	0.74	0.85	0.97	1.00	1.00	1.00
		PI	1.33	1.33	1.34	1.34	1.41	1.41	1.42	1.42	1.50	1.50	1.50	1.59	1.59	1.59	1.60	1.60
	114.8	TC	8629	12876	8651	8662	9137	9154	9170	9186	9948	9966	9985	10794	10814	10830	10849	10868
		S/T	0.50	0.57	0.67	0.76	0.53	0.61	0.71	0.81	0.57	0.64	0.75	0.86	0.98	1.00	1.00	1.00
		PI	1.26	1.26	1.26	1.26	1.33	1.34	1.34	1.34	1.41	1.42	1.42	1.50	1.50	1.51	1.51	1.51
	122	TC	6958	12876	6975	6984	7357	7375	7394	7412	8271	8292	8313	9225	9248	9266	9288	9309
		S/T	0.52	0.59	0.69	0.79	0.55	0.63	0.74	0.84	0.59	0.67	0.78	0.89	1.00	1.00	1.00	1.00
		PI	1.19	1.19	1.19	1.19	1.26	1.26	1.26	1.26	1.34	1.34	1.34	1.41	1.42	1.42	1.42	1.42

Manufacturer reserves the right to change, at any time, specifications and designs without notice and without obligations.

One-Way Cassette (Sheet 3 of 4)

18K COOLING PERFORMANCE																		
AIRFLOW (CFM)	OUTDOOR DB (°F)	ID WB (°F)	60.8				64.4				66.2				71.6			
		ID DB (°F)	73.4	77.0	80.6	84.2	73.4	77.0	80.6	84.2	73.4	77.0	80.6	84.2	73.4	77.0	80.6	84.2
577	-22	TC	17395	12876	17438	17462	18448	18466	18484	18503	19362	19383	19404	20316	20339	20357	20379	20400
		S/T	0.48	0.54	0.63	0.72	0.50	0.58	0.67	0.77	0.53	0.61	0.71	0.81	0.93	1.00	1.00	1.00
		PI	0.43	0.43	0.43	0.43	0.46	0.46	0.46	0.46	0.49	0.49	0.49	0.51	0.51	0.52	0.52	0.52
	-10	TC	16755	12876	16796	16819	17768	17786	17804	17822	18681	18702	18723	19636	19658	19677	19698	19719
		S/T	0.48	0.55	0.64	0.73	0.51	0.58	0.68	0.77	0.54	0.61	0.72	0.82	0.93	1.00	1.00	1.00
		PI	0.51	0.51	0.51	0.51	0.54	0.54	0.54	0.54	0.57	0.57	0.57	0.60	0.61	0.61	0.61	0.61
	0	TC	16221	12876	16261	16283	17200	17219	17237	17255	18114	18135	18156	19068	19091	19109	19131	19152
		S/T	0.48	0.55	0.64	0.73	0.51	0.58	0.68	0.78	0.54	0.62	0.72	0.82	0.94	1.00	1.00	1.00
		PI	0.57	0.57	0.57	0.57	0.61	0.61	0.61	0.61	0.64	0.64	0.64	0.68	0.68	0.68	0.68	0.68
	5	TC	15954	12876	15993	16015	16917	16935	16953	16971	17830	17851	17873	18785	18807	18826	18847	18869
		S/T	0.48	0.55	0.64	0.73	0.51	0.58	0.68	0.78	0.54	0.62	0.72	0.83	0.94	1.00	1.00	1.00
		PI	0.60	0.60	0.61	0.61	0.64	0.64	0.64	0.64	0.68	0.68	0.68	0.72	0.72	0.72	0.72	0.72
	14	TC	15474	12876	15512	15533	16406	16424	16443	16461	17320	17341	17362	18274	18297	18315	18337	18358
		S/T	0.49	0.55	0.65	0.74	0.51	0.59	0.69	0.78	0.55	0.62	0.73	0.83	0.95	1.00	1.00	1.00
		PI	0.66	0.66	0.66	0.66	0.70	0.70	0.70	0.70	0.74	0.74	0.74	0.79	0.79	0.79	0.79	0.79
	23	TC	15314	12876	15351	15372	16236	16254	16272	16291	17150	17171	17192	18104	18126	18145	18167	18188
		S/T	0.49	0.56	0.65	0.74	0.52	0.59	0.69	0.79	0.55	0.63	0.73	0.83	0.95	1.00	1.00	1.00
		PI	0.70	0.70	0.70	0.70	0.74	0.74	0.74	0.74	0.79	0.79	0.79	0.83	0.83	0.83	0.83	0.84
	32	TC	14968	12876	15005	15025	15869	15887	15905	15923	16783	16804	16825	17737	17759	17778	17799	17821
		S/T	0.49	0.56	0.65	0.75	0.52	0.59	0.69	0.79	0.55	0.63	0.74	0.84	0.96	1.00	1.00	1.00
		PI	0.73	0.73	0.73	0.73	0.77	0.77	0.77	0.77	0.82	0.82	0.82	0.87	0.87	0.87	0.87	0.87
	41	TC	14759	12876	14795	14815	15647	15665	15683	15701	16560	16581	16602	17515	17537	17556	17577	17599
		S/T	0.49	0.56	0.66	0.75	0.52	0.60	0.70	0.79	0.55	0.63	0.74	0.84	0.96	1.00	1.00	1.00
		PI	0.80	0.80	0.80	0.80	0.85	0.85	0.85	0.85	0.90	0.90	0.90	0.95	0.95	0.95	0.95	0.95
	50	TC	14770	12876	14806	14826	15659	15677	15695	15713	16572	16593	16614	17527	17549	17568	17589	17610
		S/T	0.50	0.57	0.66	0.75	0.53	0.60	0.70	0.80	0.56	0.63	0.74	0.85	0.96	1.00	1.00	1.00
		PI	0.88	0.88	0.88	0.88	0.93	0.93	0.93	0.93	0.99	0.99	0.99	1.04	1.05	1.05	1.05	1.05
	59	TC	15224	12876	15261	15282	16141	16159	16177	16195	17054	17075	17097	18009	18031	18050	18071	18093
		S/T	0.50	0.57	0.66	0.76	0.53	0.60	0.70	0.80	0.56	0.64	0.75	0.85	0.97	1.00	1.00	1.00
		PI	0.93	0.93	0.94	0.94	0.99	0.99	0.99	0.99	1.05	1.05	1.05	1.11	1.11	1.11	1.11	1.12
	68	TC	15678	12876	15716	15738	16623	16641	16659	16678	17537	17558	17579	18491	18513	18532	18553	18575
		S/T	0.50	0.57	0.67	0.76	0.53	0.60	0.71	0.81	0.56	0.64	0.75	0.86	0.97	1.00	1.00	1.00
		PI	0.99	0.99	0.99	0.99	1.05	1.05	1.05	1.05	1.11	1.11	1.11	1.18	1.18	1.18	1.18	1.18
	77	TC	16131	12876	16171	16193	17105	17123	17142	17160	18019	18040	18061	18973	18996	19014	19036	19057
		S/T	0.51	0.59	0.69	0.78	0.54	0.62	0.73	0.83	0.58	0.66	0.77	0.88	1.00	1.00	1.00	1.00
		PI	1.04	1.05	1.05	1.05	1.11	1.11	1.11	1.11	1.17	1.17	1.18	1.24	1.24	1.24	1.25	1.25
	86	TC	14458	12876	14494	14514	15327	15346	15364	15382	16241	16262	16283	17195	17218	17236	17258	17279
		S/T	0.52	0.59	0.69	0.79	0.55	0.63	0.74	0.84	0.59	0.67	0.78	0.89	1.00	1.00	1.00	1.00
		PI	1.45	1.46	1.46	1.46	1.54	1.54	1.54	1.55	1.63	1.63	1.64	1.73	1.73	1.73	1.73	1.74
	95	TC	14421	12876	14457	14477	15288	15306	15324	15343	16202	16223	16244	17156	17178	17197	17219	17240
		S/T	0.53	0.61	0.71	0.81	0.57	0.65	0.75	0.86	0.60	0.68	0.80	0.91	0.64	0.74	0.85	0.97
		PI	1.59	1.59	1.59	1.60	1.69	1.69	1.69	1.69	1.79	1.79	1.79	1.89	1.89	1.90	1.90	1.90
	104	TC	11862	12876	11891	11907	12568	12586	12604	12623	13482	13503	13524	14436	14458	14477	14498	14520
		S/T	0.56	0.64	0.75	0.85	0.59	0.68	0.79	0.90	0.63	0.72	0.84	0.96	1.00	1.00	1.00	1.00
		PI	1.50	1.50	1.51	1.51	1.59	1.59	1.60	1.60	1.69	1.69	1.69	1.79	1.80	1.80	1.80	1.80
	114.8	TC	9730	12876	9754	9768	10304	10322	10340	10358	11217	11238	11259	12171	12194	12212	12234	12255
		S/T	0.57	0.65	0.76	0.86	0.60	0.69	0.80	0.91	0.64	0.73	0.85	0.97	1.00	1.00	1.00	1.00
		PI	1.42	1.42	1.42	1.42	1.50	1.51	1.51	1.51	1.59	1.60	1.60	1.69	1.70	1.70	1.70	1.70
	122	TC	7956	12876	7976	7987	8418	8436	8454	8473	9332	9353	9374	10286	10308	10327	10348	10370
		S/T	0.59	0.67	0.78	0.89	0.62	0.71	0.83	0.95	0.66	0.75	0.88	1.00	1.00	1.00	1.00	1.00
		PI	1.34	1.34	1.34	1.35	1.42	1.42	1.42	1.43	1.51	1.51	1.51	1.59	1.60	1.60	1.60	1.60

TC: Total Cooling Capacity (BTU/hr)

S/T: Sensible Cooling Capacity Ratio

PI: Power Input (kW)

Extrapolated Data

One-Way Cassette (Sheet 4 of 4)

18K COOLING PERFORMANCE																		
AIRFLOW (CFM)	OUTDOOR DB (°F)	ID WB (°F)	60.8				64.4				66.2				71.6			
		ID DB (°F)	73.4	77.0	80.6	84.2	73.4	77.0	80.6	84.2	73.4	77.0	80.6	84.2	73.4	77.0	80.6	84.2
618	-22	TC	19344	12876	19392	19418	20507	20531	20556	20580	21733	21761	21789	23013	23043	23068	23096	23125
		S/T	0.53	0.61	0.71	0.81	0.57	0.65	0.76	0.86	0.60	0.68	0.80	0.91	1.00	1.00	1.00	1.00
		PI	0.49	0.49	0.49	0.49	0.51	0.51	0.52	0.52	0.54	0.55	0.55	0.58	0.58	0.58	0.58	0.58
	-10	TC	18666	12876	18712	18737	19788	19811	19835	19858	20970	20997	21025	22205	22234	22259	22286	22314
		S/T	0.54	0.61	0.72	0.82	0.57	0.65	0.76	0.87	0.60	0.69	0.81	0.92	1.00	1.00	1.00	1.00
		PI	0.57	0.57	0.57	0.57	0.61	0.61	0.61	0.61	0.64	0.64	0.64	0.68	0.68	0.68	0.68	0.68
	0	TC	18100	12876	18145	18170	19188	19211	19234	19257	20335	20361	20388	21533	21561	21584	21611	21638
		S/T	0.54	0.62	0.72	0.82	0.57	0.65	0.76	0.87	0.61	0.69	0.81	0.92	1.00	1.00	1.00	1.00
		PI	0.64	0.64	0.64	0.64	0.68	0.68	0.68	0.68	0.72	0.72	0.72	0.76	0.76	0.77	0.77	0.77
	5	TC	17818	12876	17862	17886	18889	18911	18933	18956	20017	20043	20069	21196	21224	21247	21274	21300
		S/T	0.54	0.62	0.72	0.83	0.58	0.66	0.77	0.87	0.61	0.70	0.81	0.93	1.00	1.00	1.00	1.00
		PI	0.68	0.68	0.68	0.68	0.72	0.72	0.72	0.72	0.76	0.76	0.76	0.81	0.81	0.81	0.81	0.81
	14	TC	17309	12876	17352	17375	18349	18371	18393	18414	19446	19471	19496	20591	20618	20640	20666	20692
		S/T	0.55	0.62	0.73	0.83	0.58	0.66	0.77	0.88	0.61	0.70	0.82	0.93	1.00	1.00	1.00	1.00
		PI	0.74	0.74	0.74	0.75	0.79	0.79	0.79	0.79	0.83	0.83	0.84	0.88	0.88	0.89	0.89	0.89
	23	TC	17139	12876	17181	17205	18169	18191	18212	18234	19255	19280	19305	20389	20416	20438	20463	20489
		S/T	0.55	0.62	0.73	0.83	0.58	0.66	0.77	0.88	0.62	0.70	0.82	0.94	1.00	1.00	1.00	1.00
		PI	0.79	0.79	0.79	0.79	0.83	0.83	0.83	0.84	0.88	0.88	0.88	0.93	0.94	0.94	0.94	0.94
	32	TC	16773	12876	16815	16837	17781	17802	17823	17845	18844	18868	18893	19954	19980	20002	20026	20051
		S/T	0.55	0.63	0.73	0.84	0.58	0.67	0.78	0.89	0.62	0.71	0.83	0.94	1.00	1.00	1.00	1.00
		PI	0.82	0.82	0.82	0.82	0.87	0.87	0.87	0.87	0.92	0.92	0.92	0.97	0.97	0.98	0.98	0.98
	41	TC	16551	12876	16592	16615	17546	17567	17588	17609	18595	18619	18643	19690	19716	19737	19762	19786
		S/T	0.55	0.63	0.74	0.84	0.59	0.67	0.78	0.89	0.62	0.71	0.83	0.95	1.00	1.00	1.00	1.00
		PI	0.90	0.90	0.90	0.90	0.95	0.95	0.95	0.95	1.01	1.01	1.01	1.07	1.07	1.07	1.07	1.07
	50	TC	16563	12876	16604	16627	17559	17580	17600	17621	18608	18632	18656	19704	19730	19751	19776	19801
		S/T	0.56	0.63	0.74	0.85	0.59	0.67	0.79	0.90	0.63	0.71	0.83	0.95	1.00	1.00	1.00	1.00
		PI	0.99	0.99	0.99	0.99	1.04	1.05	1.05	1.05	1.11	1.11	1.11	1.17	1.17	1.18	1.18	1.18
	59	TC	17044	12876	17086	17109	18068	18090	18111	18133	19148	19173	19198	20276	20303	20325	20350	20375
		S/T	0.56	0.64	0.75	0.85	0.59	0.68	0.79	0.90	0.63	0.72	0.84	0.96	1.00	1.00	1.00	1.00
		PI	1.05	1.05	1.05	1.05	1.11	1.11	1.11	1.11	1.18	1.18	1.18	1.25	1.25	1.25	1.25	1.25
	68	TC	17525	12876	17568	17592	18578	18600	18622	18644	19688	19714	19740	20848	20875	20898	20924	20950
		S/T	0.56	0.64	0.75	0.85	0.60	0.68	0.79	0.91	0.63	0.72	0.84	0.96	1.00	1.00	1.00	1.00
		PI	1.11	1.11	1.11	1.11	1.18	1.18	1.18	1.18	1.25	1.25	1.25	1.32	1.32	1.32	1.33	1.33
	77	TC	18006	12876	18050	18074	19088	19110	19133	19156	20228	20255	20281	21420	21448	21471	21498	21525
		S/T	0.58	0.66	0.77	0.88	0.61	0.70	0.82	0.93	0.65	0.74	0.86	0.99	1.00	1.00	1.00	1.00
		PI	1.17	1.17	1.18	1.18	1.24	1.24	1.25	1.25	1.32	1.32	1.32	1.39	1.40	1.40	1.40	1.40
	86	TC	16233	12876	16273	16295	17209	17229	17250	17270	18237	18261	18285	19312	19337	19358	19382	19406
		S/T	0.58	0.67	0.78	0.89	0.62	0.71	0.83	0.94	0.66	0.75	0.88	1.00	1.00	1.00	1.00	1.00
		PI	1.63	1.63	1.64	1.64	1.73	1.73	1.73	1.74	1.83	1.84	1.84	1.94	1.94	1.95	1.95	1.95
	95	TC	16194	12876	16234	16256	17167	17188	17208	17228	18193	18217	18241	19265	19290	19311	19335	19359
		S/T	0.60	0.68	0.80	0.91	0.64	0.72	0.85	0.97	0.67	0.75	0.90	1.00	1.00	1.00	1.00	1.00
		PI	1.79	1.79	1.79	1.79	1.89	1.90	1.90	1.90	2.01	2.01	2.01	2.12	2.13	2.13	2.13	2.13
	104	TC	13482	12876	13516	13534	14293	14310	14327	14344	15147	15166	15186	16039	16060	16077	16097	16117
		S/T	0.63	0.72	0.84	0.96	0.67	0.75	0.89	1.00	0.71	0.75	0.94	1.00	1.00	1.00	1.00	1.00
		PI	1.69	1.69	1.69	1.69	1.79	1.79	1.79	1.79	1.90	1.90	1.90	2.01	2.01	2.01	2.01	2.02
	114.8	TC	11225	12876	11252	11268	11899	11913	11928	11942	12610	12627	12643	13353	13371	13385	13402	13418
		S/T	0.64	0.73	0.85	0.97	0.68	0.75	0.90	1.00	0.72	0.75	0.95	1.00	1.00	1.00	1.00	1.00
		PI	1.59	1.60	1.60	1.60	1.69	1.69	1.69	1.70	1.79	1.79	1.79	1.90	1.90	1.90	1.90	1.91
	122	TC	9345	12876	9368	9381	9907	9918	9930	9942	10499	10512	10526	11117	11132	11144	11158	11172
		S/T	0.66	0.75	0.88	1.00	0.70	0.75	0.93	1.00	0.74	0.75	0.99	1.00	1.00	1.00	1.00	1.00
		PI	1.51	1.51	1.51	1.51	1.60	1.60	1.60	1.60	1.69	1.69	1.70	1.79	1.79	1.80	1.80	1.80

Manufacturer reserves the right to change, at any time, specifications and designs without notice and without obligations.

HEATING PERFORMANCE ONE-WAY CASSETTE

One-Way Cassette (Sheet 1 of 2)

6K HEATING PERFORMANCE									
AIRFLOW (CFM)	HEATING PERFORMANCE AT INDOOR DRY BULB TEMPERATURE								
	OUTDOOR DB (°F)	TC: TOTAL CAPACITY IN KILOWATTS				PI:TOTAL POWER IN KILOWATTS			
		Indoor Conditions DB (°F)				Indoor Conditions DB (°F)			
		60.8	68.0	71.6	75.2	60.8	68.0	71.6	75.2
489	-22.0	2965	3025	3087	3118	0.66	0.66	0.67	0.67
	-10.0	4484	4575	4669	4716	0.78	0.78	0.79	0.79
	0.0	5750	5867	5987	6047	0.88	0.88	0.89	0.89
	5.0	6383	6513	6646	6713	0.93	0.93	0.94	0.94
	14.0	7522	7676	7832	7911	1.02	1.02	1.03	1.03
	17.0	7902	8063	8228	8311	1.05	1.05	1.06	1.06
	22.0	8224	8392	8563	8650	1.04	1.05	1.05	1.06
	27.0	8546	8721	8899	8989	1.04	1.04	1.05	1.05
	32.0	8869	9050	9234	9328	1.03	1.04	1.04	1.05
	37.0	9191	9379	9570	9667	1.03	1.03	1.04	1.04
	42.0	9452	9644	9841	9941	1.01	1.02	1.02	1.03
	44.6	9556	9751	9950	10050	1.01	1.01	1.02	1.02
	52.0	9973	10176	10384	10489	0.99	0.99	1.00	1.00
	57.0	11112	11339	11571	11687	0.97	0.98	0.98	0.99
	62.0	11395	11628	11865	11985	0.96	0.96	0.97	0.97
	64.4	11509	11743	11983	12104	0.95	0.96	0.96	0.97
530	-22.0	3187	3252	3318	3352	0.67	0.67	0.67	0.68
	-10.0	4820	4918	5019	5069	0.79	0.79	0.80	0.80
	0.0	6181	6307	6435	6500	0.89	0.89	0.90	0.90
	5.0	6861	7001	7144	7216	0.94	0.94	0.95	0.95
	14.0	8085	8251	8419	8504	1.03	1.03	1.04	1.04
	17.0	8494	8667	8844	8933	1.06	1.06	1.07	1.08
	22.0	8840	9021	9205	9298	1.05	1.06	1.06	1.07
	27.0	9187	9374	9565	9662	1.05	1.05	1.06	1.06
	32.0	9533	9727	9926	10026	1.04	1.05	1.05	1.06
	37.0	9879	10081	10287	10391	1.04	1.04	1.05	1.05
	42.0	10159	10367	10578	10685	1.02	1.03	1.03	1.04
	44.6	10271	10481	10695	10803	1.02	1.02	1.03	1.03
	52.0	10720	10938	11162	11274	1.00	1.00	1.01	1.01
	57.0	11945	12188	12437	12563	0.98	0.99	0.99	1.00
	62.0	12249	12499	12754	12883	0.97	0.97	0.98	0.98
	64.4	12370	12623	12881	13011	0.96	0.97	0.97	0.98

Manufacturer reserves the right to change, at any time, specifications and designs without notice and without obligations.

One-Way Cassette (Sheet 2 of 2)

6K HEATING PERFORMANCE									
AIRFLOW (CFM)	HEATING PERFORMANCE AT INDOOR DRY BULB TEMPERATURE								
	OUTDOOR DB (°F)	TC: TOTAL CAPACITY IN KILOWATTS				PI:TOTAL POWER IN KILOWATTS			
		Indoor Conditions DB (°F)				Indoor Conditions DB (°F)			
		60.8	68.0	71.6	75.2	60.8	68.0	71.6	75.2
577	-22.0	3426	3496	3567	3603	0.67	0.68	0.68	0.68
	-10.0	5181	5287	5394	5449	0.80	0.80	0.80	0.81
	0.0	6643	6779	6917	6987	0.90	0.90	0.91	0.91
	5.0	7375	7525	7679	7756	0.95	0.95	0.96	0.96
	14.0	8691	8868	9049	9141	1.04	1.04	1.05	1.06
	17.0	9130	9316	9506	9602	1.07	1.08	1.08	1.09
	22.0	9502	9696	9894	9994	1.06	1.07	1.08	1.08
	27.0	9875	10076	10282	10386	1.06	1.06	1.07	1.07
	32.0	10247	10456	10669	10777	1.05	1.06	1.06	1.07
	37.0	10619	10836	11057	11169	1.05	1.05	1.06	1.06
	42.0	10920	11143	11371	11485	1.03	1.04	1.04	1.05
	44.6	11041	11266	11496	11612	1.03	1.03	1.04	1.04
	52.0	11522	11758	11998	12119	1.01	1.01	1.02	1.02
	57.0	12839	13101	13369	13504	0.99	1.00	1.00	1.01
	62.0	13166	13435	13709	13848	0.98	0.98	0.99	0.99
	64.4	13297	13568	13845	13985	0.97	0.98	0.98	0.99
618	-22.0	3648	3796	3798	3836	0.68	0.74	0.69	0.69
	-10.0	5517	5741	5744	5802	0.80	0.87	0.81	0.82
	0.0	7074	7361	7366	7440	0.91	0.98	0.92	0.92
	5.0	7853	8172	8177	8259	0.96	1.04	0.97	0.97
	14.0	9255	9630	9636	9733	1.05	1.13	1.06	1.07
	17.0	9722	10117	10123	10225	1.08	1.17	1.09	1.10
	22.0	10118	10529	10535	10642	1.08	1.16	1.09	1.09
	27.0	10515	10942	10948	11059	1.07	1.16	1.08	1.09
	32.0	10911	11354	11361	11476	1.06	1.15	1.07	1.08
	37.0	11308	11767	11774	11893	1.06	1.14	1.07	1.07
	42.0	11628	12101	12108	12230	1.04	1.13	1.05	1.06
	44.6	11756	12234	12241	12365	1.04	1.12	1.05	1.05
	52.0	12269	12768	12775	12904	1.02	1.10	1.03	1.03
	57.0	13672	13101	14235	14379	1.00	1.08	1.01	1.02
	62.0	14020	13435	14598	14745	0.99	1.07	1.00	1.00
	64.4	14159	13568	14743	14892	0.98	1.06	0.99	1.00

Manufacturer reserves the right to change, at any time, specifications and designs without notice and without obligations.

One-Way Cassette (Sheet 1 of 2)

9K HEATING PERFORMANCE

AIRFLOW (CFM)	OUTDOOR DB (°F)	HEATING PERFORMANCE AT INDOOR DRY BULB TEMPERATURE							
		TC: TOTAL CAPACITY IN KILOWATTS				PI: TOTAL POWER IN KILOWATTS			
		Indoor Conditions DB (°F)				Indoor Conditions DB (°F)			
		60.8	68.0	71.6	75.2	60.8	68.0	71.6	75.2
489	-22.0	3778	3855	3934	3974	1.49	1.50	1.51	1.52
	-10.0	5433	5544	5657	5715	1.54	1.54	1.55	1.56
	0.0	6813	6952	7093	7165	1.57	1.58	1.59	1.60
	5.0	7502	7655	7811	7890	1.59	1.60	1.61	1.61
	14.0	8743	8922	9104	9196	1.62	1.63	1.64	1.65
	17.0	9157	9344	9535	9631	1.63	1.64	1.65	1.66
	22.0	9438	9630	9827	9926	1.57	1.57	1.58	1.59
	27.0	9719	9917	10119	10222	1.50	1.51	1.51	1.52
	32.0	9999	10203	10412	10517	1.43	1.44	1.45	1.45
	37.0	10280	10490	10704	10812	1.36	1.37	1.38	1.38
	42.0	10569	10785	11005	11116	1.33	1.33	1.34	1.35
	44.6	10685	10903	11126	11238	1.31	1.32	1.33	1.33
	52.0	11148	11375	11608	11725	1.26	1.26	1.27	1.28
	57.0	12420	12673	12932	13063	1.22	1.23	1.23	1.24
	62.0	12734	12994	13259	13393	1.19	1.19	1.20	1.20
	64.4	12860	13122	13390	13525	1.17	1.18	1.18	1.19
530	-22.0	4061	4144	4229	4272	1.51	1.52	1.52	1.53
	-10.0	5840	5960	6081	6143	1.55	1.56	1.57	1.58
	0.0	7323	7472	7625	7702	1.59	1.60	1.60	1.61
	5.0	8064	8229	8397	8481	1.61	1.61	1.62	1.63
	14.0	9398	9590	9786	9885	1.64	1.65	1.66	1.66
	17.0	9843	10044	10249	10352	1.65	1.66	1.67	1.68
	22.0	10145	10352	10563	10670	1.58	1.59	1.60	1.61
	27.0	10446	10660	10877	10987	1.51	1.52	1.53	1.54
	32.0	10748	10968	11191	11304	1.45	1.45	1.46	1.47
	37.0	11050	11275	11506	11622	1.38	1.38	1.39	1.40
	42.0	11361	11593	11829	11949	1.34	1.35	1.36	1.36
	44.6	11485	11720	11959	12080	1.33	1.33	1.34	1.35
	52.0	11983	12227	12477	12603	1.27	1.28	1.28	1.29
	57.0	13350	13622	13901	14041	1.23	1.24	1.25	1.25
	62.0	13688	13967	14252	14396	1.20	1.20	1.21	1.22
	64.4	13823	14105	14393	14538	1.18	1.19	1.20	1.20

Manufacturer reserves the right to change, at any time, specifications and designs without notice and without obligations.

One-Way Cassette (Sheet 2 of 2)

9K HEATING PERFORMANCE

AIRFLOW (CFM)	OUTDOOR DB (°F)	HEATING PERFORMANCE AT INDOOR DRY BULB TEMPERATURE							
		TC: TOTAL CAPACITY IN KILOWATTS				PI: TOTAL POWER IN KILOWATTS			
		Indoor Conditions DB (°F)				Indoor Conditions DB (°F)			
		60.8	68.0	71.6	75.2	60.8	68.0	71.6	75.2
577	-22.0	4366	4455	4546	4591	1.52	1.53	1.54	1.55
	-10.0	6278	6406	6537	6603	1.57	1.58	1.58	1.59
	0.0	7871	8032	8196	8279	1.60	1.61	1.62	1.63
	5.0	8668	8845	9025	9117	1.62	1.63	1.64	1.65
	14.0	10102	10308	10519	10625	1.66	1.66	1.67	1.68
	17.0	10580	10796	11016	11128	1.67	1.68	1.68	1.69
	22.0	10905	11127	11354	11469	1.60	1.61	1.61	1.62
	27.0	11229	11458	11692	11810	1.53	1.54	1.54	1.55
	32.0	11553	11789	12030	12151	1.46	1.47	1.47	1.48
	37.0	11878	12120	12367	12492	1.39	1.40	1.41	1.41
	42.0	12212	12461	12715	12844	1.36	1.36	1.37	1.38
	44.6	12346	12597	12855	12984	1.34	1.35	1.35	1.36
	52.0	12880	13143	13411	13547	1.28	1.29	1.30	1.30
	57.0	14350	14643	14942	15093	1.25	1.25	1.26	1.27
	62.0	14713	15013	15320	15474	1.21	1.22	1.22	1.23
	64.4	14858	15161	15471	15627	1.20	1.20	1.21	1.21
618	-22.0	4649	4837	4840	4889	1.54	1.66	1.55	1.56
	-10.0	6685	6956	6960	7031	1.58	1.71	1.60	1.61
	0.0	8382	8722	8727	8815	1.62	1.75	1.64	1.64
	5.0	9230	9605	9610	9708	1.64	1.77	1.66	1.66
	14.0	10757	11194	11201	11314	1.67	1.81	1.69	1.70
	17.0	11266	11724	11731	11849	1.68	1.82	1.70	1.71
	22.0	11611	12083	12090	12212	1.61	1.74	1.63	1.64
	27.0	11957	12442	12450	12576	1.54	1.67	1.56	1.57
	32.0	12302	12802	12809	12939	1.47	1.59	1.49	1.50
	37.0	12648	13161	13169	13302	1.41	1.52	1.42	1.43
	42.0	13004	13532	13540	13676	1.37	1.48	1.38	1.39
	44.6	13146	13680	13688	13826	1.35	1.46	1.37	1.37
	52.0	13715	14272	14281	14425	1.30	1.40	1.31	1.32
	57.0	15280	14643	15910	16071	1.26	1.36	1.27	1.28
	62.0	15667	15013	16313	16477	1.22	1.32	1.23	1.24
	64.4	15821	15161	16474	16640	1.21	1.31	1.22	1.23

Manufacturer reserves the right to change, at any time, specifications and designs without notice and without obligations.

One-Way Cassette (Sheet 1 of 2)

12K HEATING PERFORMANCE									
AIRFLOW (CFM)	HEATING PERFORMANCE AT INDOOR DRY BULB TEMPERATURE								
	OUTDOOR DB (°F)	TC: TOTAL CAPACITY IN KILOWATTS				PI: TOTAL POWER IN KILOWATTS			
		Indoor Conditions DB (°F)				Indoor Conditions DB (°F)			
		60.8	68.0	71.6	75.2	60.8	68.00	71.6	75.2
		16.0	20.0	22.0	24.0	16.0	20.00	22.0	24.0
247	-22.0	7117	7262	7410	7485	1.96	1.97	1.98	1.99
	-10.0	7790	7949	8111	8193	1.81	1.82	1.83	1.84
	0.0	8352	8522	8696	8784	1.69	1.70	1.71	1.72
	5.0	8632	8808	8988	9079	1.63	1.64	1.65	1.66
	14.0	9138	9324	9514	9610	1.53	1.53	1.54	1.55
	17.0	9306	9496	9690	9788	1.49	1.50	1.51	1.51
	22.0	9569	9765	9964	10065	1.47	1.47	1.48	1.49
	27.0	9833	10033	10238	10342	1.44	1.45	1.46	1.47
	32.0	10096	10302	10512	10619	1.42	1.43	1.43	1.44
	37.0	10360	10571	10787	10896	1.40	1.40	1.41	1.42
	42.0	10716	10935	11158	11271	1.36	1.37	1.38	1.38
	44.6	10859	11080	11306	11420	1.35	1.36	1.36	1.37
	52.0	11429	11662	11900	12020	1.30	1.30	1.31	1.32
	57.0	13249	13520	13796	13935	1.26	1.27	1.28	1.28
	62.0	13650	13929	14213	14357	1.23	1.24	1.24	1.25
	64.4	13810	14092	14380	14525	1.22	1.22	1.23	1.24
282	-22.0	7595	7750	7909	7988	1.98	1.99	2.00	2.01
	-10.0	8314	8484	8657	8745	1.83	1.84	1.85	1.86
	0.0	8913	9095	9281	9375	1.71	1.72	1.73	1.74
	5.0	9213	9401	9593	9690	1.65	1.66	1.67	1.68
	14.0	9752	9951	10154	10257	1.54	1.55	1.56	1.57
	17.0	9932	10135	10342	10446	1.51	1.51	1.52	1.53
	22.0	10213	10422	10634	10742	1.48	1.49	1.50	1.50
	27.0	10494	10708	10927	11037	1.46	1.47	1.47	1.48
	32.0	10775	10995	11220	11333	1.43	1.44	1.45	1.46
	37.0	11056	11282	11512	11629	1.41	1.42	1.43	1.43
	42.0	11437	11670	11908	12029	1.38	1.38	1.39	1.40
	44.6	11589	11826	12067	12189	1.36	1.37	1.38	1.38
	52.0	12198	12447	12701	12829	1.31	1.32	1.32	1.33
	57.0	14141	14429	14724	14873	1.28	1.28	1.29	1.30
	62.0	14568	14866	15169	15322	1.24	1.25	1.26	1.26
	64.4	14739	15040	15347	15502	1.23	1.24	1.24	1.25

Manufacturer reserves the right to change, at any time, specifications and designs without notice and without obligations.

One-Way Cassette (Sheet 2 of 2)

12K HEATING PERFORMANCE									
AIRFLOW (CFM)	HEATING PERFORMANCE AT INDOOR DRY BULB TEMPERATURE								
	OUTDOOR DB (°F)	TC: TOTAL CAPACITY IN KILOWATTS				PI: TOTAL POWER IN KILOWATTS			
		Indoor Conditions DB (°F)				Indoor Conditions DB (°F)			
		60.8	68.0	71.6	75.2	60.8	68.00	71.6	75.2
		16.0	20.0	22.0	24.0	16.0	20.00	22.0	24.0
310	-22.0	8106	8272	8441	8526	2.00	2.01	2.02	2.03
	-10.0	8874	9055	9240	9333	1.85	1.86	1.87	1.88
	0.0	9513	9707	9905	10005	1.73	1.74	1.75	1.75
	5.0	9833	10033	10238	10342	1.67	1.68	1.68	1.69
	14.0	10408	10621	10838	10947	1.56	1.57	1.57	1.58
	17.0	10600	10817	11037	11149	1.52	1.53	1.54	1.54
	22.0	10900	11123	11350	11464	1.50	1.50	1.51	1.52
	27.0	11200	11429	11662	11780	1.47	1.48	1.49	1.50
	32.0	11500	11735	11974	12095	1.45	1.46	1.46	1.47
	37.0	11800	12041	12287	12411	1.43	1.43	1.44	1.45
	42.0	12206	12455	12710	12838	1.39	1.40	1.41	1.41
	44.6	12369	12621	12879	13009	1.38	1.38	1.39	1.40
	52.0	13018	13284	13555	13692	1.32	1.33	1.34	1.34
	57.0	15092	15400	15714	15873	1.29	1.30	1.30	1.31
	62.0	15548	15866	16190	16353	1.26	1.26	1.27	1.28
	64.4	15731	16052	16380	16545	1.24	1.25	1.26	1.26
352	-22.0	8936	9299	9305	9399	2.02	2.26	2.04	2.05
	-10.0	9782	10180	10186	10289	1.87	2.09	1.89	1.90
	0.0	10487	10913	10920	11030	1.75	1.95	1.76	1.77
	5.0	10840	11280	11287	11401	1.68	1.88	1.70	1.71
	14.0	11474	11940	11947	12068	1.57	1.76	1.59	1.60
	17.0	11686	12160	12168	12291	1.54	1.72	1.55	1.56
	22.0	12017	12505	12512	12638	1.51	1.69	1.53	1.54
	27.0	12347	12849	12856	12986	1.49	1.66	1.50	1.51
	32.0	12678	13193	13201	13334	1.46	1.64	1.48	1.49
	37.0	13009	13537	13545	13682	1.44	1.61	1.45	1.46
	42.0	13456	14003	14011	14153	1.41	1.57	1.42	1.43
	44.6	13635	14189	14198	14341	1.39	1.56	1.41	1.41
	52.0	14351	14934	14943	15094	1.34	1.50	1.35	1.36
	57.0	16638	15400	17324	17499	1.30	1.46	1.32	1.32
	62.0	17141	15866	17848	18028	1.27	1.42	1.28	1.29
	64.4	17342	16052	18057	18240	1.26	1.40	1.27	1.27

Manufacturer reserves the right to change, at any time, specifications and designs without notice and without obligations.

One-Way Cassette (Sheet 1 of 2)

18K HEATING PERFORMANCE

AIRFLOW (CFM)	OUTDOOR DB (°F)	HEATING PERFORMANCE AT INDOOR DRY BULB TEMPERATURE							
		TC: TOTAL CAPACITY IN KILOWATTS				PI: TOTAL POWER IN KILOWATTS			
		Indoor Conditions DB (°F)				Indoor Conditions DB (°F)			
		60.8	68.0	71.6	75.2	60.8	68.0	71.6	75.2
489	-22.0	7900	8062	8226	8309	2.26	2.27	2.28	2.29
	-10.0	9812	10013	10217	10320	2.32	2.33	2.35	2.36
	0.0	11406	11638	11876	11996	2.38	2.39	2.40	2.41
	5.0	12202	12451	12705	12834	2.40	2.42	2.43	2.44
	14.0	13636	13914	14198	14342	2.45	2.47	2.48	2.49
	17.0	14114	14402	14696	14844	2.47	2.48	2.49	2.51
	22.0	14327	14620	14918	15069	2.36	2.37	2.38	2.40
	27.0	14540	14837	15140	15293	2.25	2.26	2.28	2.29
	32.0	14754	15055	15362	15517	2.14	2.16	2.17	2.18
	37.0	14967	15272	15584	15741	2.04	2.05	2.06	2.07
	42.0	15320	15633	15952	16113	1.97	1.98	1.99	2.00
	44.6	15461	15777	16099	16261	1.94	1.95	1.96	1.97
	52.0	16026	16353	16687	16855	1.84	1.85	1.86	1.87
	57.0	18392	18768	19151	19344	1.77	1.78	1.79	1.80
	62.0	18789	19172	19563	19761	1.71	1.72	1.73	1.74
	64.4	18947	19334	19729	19928	1.68	1.69	1.70	1.71
530	-22.0	8736	8914	9096	9188	2.28	2.29	2.30	2.31
	-10.0	10850	11071	11297	11411	2.35	2.36	2.37	2.38
	0.0	12611	12869	13131	13264	2.40	2.41	2.42	2.44
	5.0	13492	13767	14048	14190	2.43	2.44	2.45	2.46
	14.0	15078	15385	15699	15858	2.48	2.49	2.50	2.52
	17.0	15606	15925	16250	16414	2.49	2.51	2.52	2.53
	22.0	15842	16165	16495	16662	2.38	2.40	2.41	2.42
	27.0	16078	16406	16741	16910	2.28	2.29	2.30	2.31
	32.0	16313	16646	16986	17158	2.17	2.18	2.19	2.20
	37.0	16549	16887	17232	17406	2.06	2.07	2.08	2.09
	42.0	16940	17285	17638	17816	1.99	2.00	2.01	2.02
	44.6	17096	17445	17801	17980	1.96	1.97	1.98	1.99
	52.0	17720	18082	18451	18637	1.86	1.87	1.88	1.89
	57.0	20337	20752	21175	21389	1.79	1.80	1.81	1.82
	62.0	20775	21199	21632	21850	1.73	1.74	1.74	1.75
	64.4	20950	21378	21814	22035	1.70	1.71	1.72	1.73

Manufacturer reserves the right to change, at any time, specifications and designs without notice and without obligations.

One-Way Cassette (Sheet 2 of 2)

18K HEATING PERFORMANCE

AIRFLOW (CFM)	HEATING PERFORMANCE AT INDOOR DRY BULB TEMPERATURE								
	OUTDOOR DB (°F)	TC: TOTAL CAPACITY IN KILOWATTS				PI: TOTAL POWER IN KILOWATTS			
		Indoor Conditions DB (°F)				Indoor Conditions DB (°F)			
		60.8	68.0	71.6	75.2	60.8	68.0	71.6	75.2
577	-22.0	9659	9856	10057	10159	2.30	2.31	2.33	2.34
	-10.0	11997	12241	12491	12617	2.37	2.38	2.39	2.41
	0.0	13945	14229	14519	14666	2.42	2.44	2.45	2.46
	5.0	14918	15223	15534	15691	2.45	2.47	2.48	2.49
	14.0	16672	17012	17359	17534	2.50	2.52	2.53	2.54
	17.0	17256	17608	17968	18149	2.52	2.53	2.54	2.56
	22.0	17517	17874	18239	18423	2.41	2.42	2.43	2.45
	27.0	17777	18140	18510	18697	2.30	2.31	2.32	2.33
	32.0	18038	18406	18782	18971	2.19	2.20	2.21	2.22
	37.0	18299	18672	19053	19246	2.08	2.09	2.10	2.11
	42.0	18730	19113	19503	19700	2.01	2.02	2.03	2.04
	44.6	18903	19289	19682	19881	1.98	1.99	2.00	2.01
	52.0	19594	19993	20401	20608	1.88	1.89	1.90	1.91
	57.0	22487	22946	23414	23650	1.81	1.82	1.83	1.84
	62.0	22971	23440	23918	24160	1.74	1.75	1.76	1.77
	64.4	23165	23638	24120	24364	1.72	1.73	1.74	1.74
618	-22.0	10636	11068	11074	11186	2.33	2.60	2.35	2.36
	-10.0	13210	13746	13754	13893	2.39	2.67	2.42	2.43
	0.0	15354	15978	15988	16149	2.45	2.74	2.47	2.49
	5.0	16427	17094	17104	17277	2.48	2.77	2.50	2.51
	14.0	18357	19103	19114	19307	2.53	2.82	2.55	2.57
	17.0	19001	19773	19784	19984	2.54	2.84	2.57	2.58
	22.0	19288	20071	20083	20286	2.43	2.72	2.46	2.47
	27.0	19575	20370	20382	20588	2.32	2.59	2.34	2.36
	32.0	19862	20669	20681	20890	2.21	2.47	2.23	2.24
	37.0	20149	20967	20980	21192	2.10	2.34	2.12	2.13
	42.0	20624	21462	21475	21691	2.03	2.27	2.05	2.06
	44.6	20814	21660	21673	21891	2.00	2.24	2.02	2.03
	52.0	21575	22451	22464	22691	1.90	2.12	1.92	1.93
	57.0	24760	22946	25781	26042	1.83	2.04	1.85	1.86
	62.0	25294	23440	26337	26603	1.76	1.97	1.78	1.79
	64.4	25507	23638	26559	26827	1.73	1.94	1.75	1.76

Manufacturer reserves the right to change, at any time, specifications and designs without notice and without obligations.

COOLING PERFORMANCE - CONSOLE

MODEL	COOLING Indoor Conditions DB	WB		OUTDOOR CONDITIONS (DB) -22°F (-30°C)	-13°F (-25°C)	-4°F (-20°C)	0°F (-17°C)	5°F (-15°C)	17°F (-8°C)	47°F (8°C)	77°F (25°C)	86°F (30°C)	95°F (35°C)	104°F (40°C)	113°F (45°C)	122°F (50°C)
12K	69.8°F (21°C)	59°F (15°C)	TC	11.56	11.38	11.20	10.46	10.20	10.74	10.46	10.77	10.67	10.65	10.23	8.81	4.90
			SC	7.86	7.74	7.62	7.14	7.02	7.28	7.12	7.33	7.26	7.24	6.97	6.32	4.63
			Input	0.37	0.41	0.45	0.52	0.47	0.58	0.47	0.68	0.80	0.96	1.10	1.07	0.68
	75.2°F (24°C)	62.6°F (17°C)	TC	13.50	13.32	13.14	12.41	12.14	12.69	12.41	12.72	12.62	12.59	12.17	10.76	6.85
			SC	9.10	8.97	8.85	8.36	8.18	8.55	8.36	8.57	8.50	8.48	8.20	7.25	4.61
			Input	0.60	0.63	0.67	0.74	0.69	0.80	0.69	0.90	1.02	1.18	1.32	1.29	0.90
	80.6°F (27°C)	66.2°F (19°C)	TC	15.01	14.83	14.65	13.92	13.65	14.20	13.92	14.23	14.13	14.10	13.68	12.27	8.36
			SC	9.79	9.67	9.56	9.08	8.90	9.26	9.08	9.28	9.21	9.20	8.92	8.00	5.45
			Input	0.72	0.75	0.79	0.86	0.81	0.93	0.81	1.02	1.14	1.30	1.44	1.41	1.02
	89.6°F (32°C)	73.4°F (23°C)	TC	18.02	17.84	17.67	16.93	16.66	17.21	16.93	17.24	17.14	17.11	16.69	15.28	11.37
			SC	10.29	10.19	10.09	9.67	9.52	9.83	9.67	9.85	9.79	9.77	9.53	8.73	6.49
			Input	0.96	0.99	1.03	1.10	1.05	1.17	1.05	1.26	1.38	1.54	1.68	1.65	1.26
18K	69.8°F (21°C)	59°F (15°C)	TC	20.67	20.11	19.56	17.68	17.84	18.68	16.62	16.95	16.79	16.31	12.78	10.49	7.57
			SC	15.51	15.09	14.67	12.76	13.01	13.41	12.19	12.31	12.26	12.24	10.70	9.83	7.56
			Input	0.54	0.61	0.67	0.74	0.75	0.68	0.91	1.47	1.43	1.67	1.43	1.42	1.33
	75.2°F (24°C)	62.6°F (17°C)	TC	22.51	21.96	21.40	19.52	19.68	20.52	18.46	18.79	18.63	18.15	14.62	12.33	9.41
			SC	16.87	16.45	16.03	14.63	14.75	15.37	13.84	14.08	13.96	13.60	10.95	9.24	7.05
			Input	0.60	0.66	0.73	0.79	0.80	0.73	0.96	1.52	1.48	1.72	1.49	1.47	1.38
	80.6°F (27°C)	66.2°F (19°C)	TC	24.30	23.74	23.18	21.30	21.47	22.30	20.25	20.57	20.42	19.94	16.40	14.11	11.19
			SC	17.86	17.45	17.04	15.66	15.78	16.39	14.89	15.12	15.01	14.66	12.06	10.38	8.23
			Input	0.64	0.71	0.77	0.84	0.85	0.78	1.01	1.57	1.53	1.77	1.53	1.52	1.43
	89.6°F (32°C)	73.4°F (23°C)	TC	27.64	27.08	26.52	24.64	24.80	25.64	23.59	23.91	23.76	23.27	19.74	17.45	14.53
			SC	20.42	20.01	19.59	18.20	18.33	18.94	17.43	17.67	17.55	17.20	14.59	12.89	10.73
			Input	0.73	0.79	0.86	0.92	0.94	0.86	1.09	1.65	1.61	1.86	1.62	1.61	1.51
24K	69.8°F (21°C)	59°F (15°C)	TC	25.58	25.49	25.40	24.53	23.95	23.72	26.26	28.95	27.59	25.61	24.18	21.63	20.60
			SC	18.03	17.96	17.90	17.61	16.94	16.92	18.43	19.79	19.08	18.05	17.39	15.92	15.65
			Input	1.96	1.98	2.00	2.15	2.14	2.15	1.97	1.73	1.81	2.11	2.30	2.41	2.65
	75.2°F (24°C)	62.6°F (17°C)	TC	23.23	23.14	23.05	22.19	21.60	21.37	23.91	26.61	25.25	23.26	21.83	19.28	18.25
			SC	17.52	17.46	17.39	16.74	16.29	16.12	18.04	20.07	19.05	17.55	16.47	14.54	13.77
			Input	2.37	2.38	2.40	2.55	2.54	2.55	2.37	2.14	2.21	2.51	2.70	2.81	3.05
	80.6°F (27°C)	66.2°F (19°C)	TC	23.42	23.33	23.24	22.37	21.78	21.56	24.10	26.79	25.43	23.45	22.02	19.46	18.44
			SC	17.87	17.80	17.73	17.07	16.62	16.45	18.39	20.44	19.41	17.89	16.80	14.85	14.07
			Input	2.57	2.59	2.60	2.75	2.74	2.75	2.57	2.34	2.41	2.72	2.90	3.01	3.25
	89.6°F (32°C)	73.4°F (23°C)	TC	24.29	24.20	24.11	23.25	22.66	22.43	24.97	27.67	26.31	24.32	22.89	20.34	19.31
			SC	17.68	17.61	17.55	16.92	16.49	16.33	18.18	20.14	19.15	17.70	16.66	14.80	14.06
			Input	2.91	2.93	2.95	3.10	3.09	3.10	2.92	2.69	2.76	3.06	3.25	3.36	3.60

LEGEND

DB - Dry Bulb
WB - Wet Bulb
TC - Total Net Capacity (1000 Btu/hour)
SC - Sensible Capacity (1000 Btu/hour)
Input - Total Power (kW)

NOTE: Values in grey are extrapolated based on tested performance.

HEATING PERFORMANCE - CONSOLE

MODEL	HEATING Indoor Conditions DB		OUTDOOR CONDITIONS (DB)											
			-22°F (-30°C)	-13°F (-25°C)	-4°F (-20°C)	0°F (-17°C)	5°F (-15°C)	17°F (-8°C)	19.4°F (-7°C)	24.8°F (-4°C)	32°F (0°C)	39.2°F (4°C)	44.6°F (7°C)	53.6°F (12°C)
12K	59°F (15°C)	TC	5.70	6.00	10.42	11.53	12.30	13.48	13.93	14.55	15.90	11.91	14.27	14.66
		Input	1.44	1.39	1.69	1.75	1.80	1.60	1.69	1.69	1.69	1.48	1.27	1.07
		COP	1.16	1.27	1.81	1.94	2.01	2.46	2.42	2.53	2.76	2.36	3.30	4.03
	64.4°F (18°C)	TC	5.81	6.10	10.52	11.64	12.41	13.58	14.03	14.66	16.00	12.02	14.38	14.76
		Input	1.49	1.44	1.75	1.80	1.85	1.66	1.74	1.74	1.74	1.54	1.32	1.12
		COP	1.14	1.24	1.77	1.90	1.96	2.40	2.36	2.47	2.69	2.29	3.19	3.86
	69°F (20.5°C)	TC	5.90	6.19	10.61	11.72	12.49	13.67	14.12	14.74	16.09	12.11	14.46	14.85
		Input	1.44	1.39	1.69	1.75	1.80	1.60	1.69	1.69	1.69	1.48	1.27	1.07
		COP	1.16	1.27	1.81	1.94	2.01	2.46	2.42	2.53	2.76	2.36	3.30	4.03
	71.6°F (22°C)	TC	5.86	6.16	10.58	11.69	12.46	13.64	14.09	14.71	16.06	12.07	14.43	14.82
		Input	1.57	1.51	1.82	1.87	1.93	1.73	1.82	1.81	1.82	1.61	1.39	1.19
		COP	1.10	1.19	1.70	1.83	1.90	2.31	2.27	2.38	2.59	2.20	3.04	3.64
18K	59°F (15°C)	TC	10.99	13.51	17.00	17.41	19.20	23.42	21.22	25.54	22.28	23.95	22.65	23.28
		Input	1.90	2.23	2.50	2.46	2.71	3.01	2.91	3.12	2.33	2.21	1.87	1.68
		COP	1.70	1.78	1.99	2.07	2.07	2.28	2.14	2.40	2.80	3.18	3.55	4.06
	64.4°F (18°C)	TC	10.41	12.93	16.42	16.83	18.62	22.84	20.64	24.96	21.70	23.37	22.07	22.70
		Input	1.88	2.21	2.49	2.44	2.70	2.99	2.89	3.11	2.32	2.19	1.85	1.71
		COP	1.62	1.71	1.93	2.02	2.02	2.24	2.09	2.35	2.74	3.12	3.49	3.89
	69°F (20.5°C)	TC	9.92	12.44	15.92	16.33	18.13	22.35	20.15	24.46	21.21	22.88	21.57	22.20
		Input	1.87	2.20	2.47	2.43	2.68	2.98	2.88	3.09	2.31	2.18	1.84	1.68
		COP	1.56	1.66	1.89	1.97	1.98	2.20	2.05	2.32	2.70	3.08	3.44	4.06
	71.6°F (22°C)	TC	9.64	12.16	15.64	16.05	17.85	22.07	19.87	24.18	20.93	22.60	21.29	21.99
		Input	1.86	2.19	2.47	2.42	2.68	2.97	2.87	3.09	2.30	2.17	1.83	1.76
		COP	1.52	1.62	1.86	1.94	1.96	2.18	2.03	2.30	2.67	3.05	3.41	3.67
24K	59°F (15°C)	TC	15.30	18.82	24.45	25.80	27.39	27.45	27.82	31.56	35.36	34.51	31.92	31.99
		Input	2.89	3.40	3.68	3.58	3.72	3.33	3.37	3.70	3.83	3.54	2.60	2.24
		COP	1.55	1.62	1.95	2.11	2.16	2.41	2.42	2.50	2.71	2.86	3.60	4.19
	64.4°F (18°C)	TC	15.40	18.92	24.54	25.89	27.49	27.55	27.92	31.66	35.45	34.60	32.02	32.09
		Input	2.89	3.40	3.68	3.58	3.72	3.33	3.37	3.71	3.83	3.54	2.60	2.24
		COP	1.56	1.63	1.95	2.12	2.16	2.42	2.43	2.50	2.71	2.86	3.61	4.19
	69°F (20.5°C)	TC	15.48	19.00	24.62	25.98	27.57	27.63	28.00	31.74	35.53	34.68	32.10	32.17
		Input	2.90	3.41	3.68	3.58	3.72	3.34	3.37	3.71	3.83	3.54	2.60	2.24
		COP	1.57	1.63	1.96	2.12	2.17	2.43	2.43	2.51	2.72	2.87	3.62	4.20
	71.6°F (22°C)	TC	15.52	19.04	24.67	26.02	27.62	27.67	28.05	31.78	35.58	34.73	32.14	32.22
		Input	2.90	3.41	3.69	3.59	3.73	3.34	3.37	3.71	3.84	3.54	2.60	2.25
		COP	1.57	1.64	1.96	2.13	2.17	2.43	2.44	2.51	2.72	2.87	3.62	4.20

LEGEND

DB - Dry Bulb
TC - Total Net Capacity (1000 Btu/hour)
Input - Total Power (kW)
COP - W/W

Manufacturer reserves the right to change, at any time, specifications and designs without notice and without obligations.

COOLING PERFORMANCE - DUCTED

MODEL	COOLING Indoor Conditions DB	WB		OUTDOOR CONDITIONS (DB) -22°F (-30°C)	-13°F (-25°C)	-4°F (-20°C)	0°F (-17°C)	5°F (-15°C)	17°F (-8°C)	47°F (8°C)	77°F (25°C)	86°F (30°C)	95°F (35°C)	104°F (40°C)	113°F (45°C)	122°F (50°C)
09K	69.8°F (21°C)	59°F (15°C)	TC	9.94	9.84	9.73	9.25	9.24	7.96	10.57	10.10	9.59	10.32	9.25	8.02	4.73
			SC	6.68	6.61	6.54	6.36	6.36	5.72	7.05	6.81	6.59	6.93	6.37	5.75	4.39
			Input	0.08	0.14	0.20	0.23	0.22	0.28	0.59	0.72	0.79	1.10	1.09	1.06	0.69
	75.2°F (24°C)	62.6°F (17°C)	TC	10.23	10.13	10.02	9.54	9.53	8.25	10.86	10.39	9.88	10.61	9.54	8.31	5.02
			SC	7.00	6.92	6.85	6.52	6.52	5.64	7.42	7.11	6.75	7.25	6.52	5.68	3.43
			Input	0.01	0.07	0.13	0.15	0.15	0.20	0.52	0.65	0.72	1.03	1.01	0.98	0.61
	80.6°F (27°C)	66.2°F (19°C)	TC	10.93	10.82	10.72	10.23	10.22	8.95	11.55	11.09	10.57	11.30	10.24	9.00	5.71
			SC	7.35	7.28	7.21	6.88	6.88	6.02	7.77	7.46	7.11	7.61	6.89	6.06	3.84
			Input	0.00	0.06	0.12	0.15	0.14	0.20	0.51	0.64	0.71	1.03	1.01	0.98	0.61
	89.6°F (32°C)	73.4°F (23°C)	TC	12.49	12.38	12.28	11.79	11.78	10.51	13.11	12.65	12.13	12.86	11.80	10.56	7.27
			SC	7.64	7.58	7.51	7.22	7.21	6.43	8.02	7.74	7.42	7.87	7.22	6.46	4.45
			Input	0.03	0.09	0.15	0.18	0.17	0.23	0.54	0.67	0.74	1.06	1.04	1.01	0.64
12K	69.8°F (21°C)	59°F (15°C)	TC	11.90	11.76	11.62	10.53	10.14	12.21	10.60	11.41	12.60	12.55	10.74	9.24	5.40
			SC	8.25	8.16	8.06	7.70	7.59	8.54	7.78	8.08	8.69	8.70	7.84	7.17	5.40
			Input	0.32	0.37	0.42	0.40	0.47	0.58	0.50	0.75	1.07	1.26	1.14	1.10	0.71
	75.2°F (24°C)	62.6°F (17°C)	TC	12.85	12.71	12.57	11.48	11.09	13.16	11.55	12.36	13.55	13.49	11.69	10.19	6.35
			SC	8.77	8.67	8.58	7.83	7.57	8.98	7.88	8.43	9.24	9.21	7.98	6.95	4.33
			Input	0.32	0.37	0.42	0.40	0.48	0.59	0.51	0.75	1.07	1.27	1.15	1.11	0.71
	80.6°F (27°C)	66.2°F (19°C)	TC	13.82	13.68	13.54	12.45	12.07	14.14	12.52	13.33	14.52	14.47	12.67	11.16	7.32
			SC	9.22	9.13	9.03	8.30	8.05	9.43	8.35	8.89	9.68	9.65	8.45	7.44	4.88
			Input	0.34	0.38	0.43	0.42	0.49	0.60	0.52	0.76	1.08	1.28	1.16	1.12	0.72
	89.6°F (32°C)	73.4°F (23°C)	TC	15.67	15.53	15.40	14.30	13.92	15.99	14.37	15.18	16.37	16.32	14.52	13.01	9.17
			SC	10.50	10.40	10.31	9.58	9.32	10.71	9.62	10.17	10.96	10.93	9.72	8.71	6.14
			Input	0.36	0.41	0.45	0.44	0.51	0.62	0.54	0.78	1.10	1.30	1.18	1.14	0.75
18K	69.8°F (21°C)	59°F (15°C)	TC	19.53	19.00	18.47	16.70	16.85	17.64	15.70	16.01	15.87	15.41	12.07	9.91	7.15
			SC	14.65	14.25	13.86	12.05	12.29	12.67	11.52	11.63	11.58	11.56	10.11	9.29	7.14
			Input	0.53	0.60	0.66	0.72	0.73	0.66	0.89	1.43	1.40	1.63	1.40	1.39	1.30
	75.2°F (24°C)	62.6°F (17°C)	TC	21.27	20.74	20.21	18.44	18.59	19.38	17.44	17.75	17.60	17.15	13.81	11.65	8.89
			SC	15.94	15.54	15.15	13.82	13.93	14.52	13.07	13.30	13.19	12.85	10.35	8.73	6.66
			Input	0.58	0.65	0.71	0.77	0.79	0.71	0.94	1.48	1.45	1.69	1.45	1.44	1.35
	80.6°F (27°C)	66.2°F (19°C)	TC	22.95	22.43	21.90	20.12	20.28	21.07	19.13	19.43	19.29	18.83	15.50	13.33	10.57
			SC	16.88	16.49	16.10	14.79	14.91	15.49	14.06	14.29	14.18	13.85	11.39	9.80	7.77
			Input	0.63	0.69	0.76	0.82	0.83	0.76	0.99	1.53	1.49	1.73	1.50	1.49	1.40
	89.6°F (32°C)	73.4°F (23°C)	TC	26.11	25.58	25.05	23.28	23.43	24.22	22.28	22.59	22.44	21.99	18.65	16.49	13.73
			SC	17.29	16.94	16.59	15.41	15.51	16.04	14.75	14.96	14.86	14.56	12.35	10.92	9.09
			Input	0.71	0.78	0.84	0.90	0.91	0.84	1.07	1.61	1.58	1.81	1.58	1.57	1.48
24K	69.8°F (21°C)	59°F (15°C)	TC	31.53	30.71	29.88	24.57	27.20	29.99	28.58	26.53	25.04	22.40	21.34	18.05	10.69
			SC	26.32	25.63	24.94	18.24	17.55	17.53	19.09	20.49	19.76	18.70	18.01	16.49	16.21
			Input	1.96	1.97	1.99	2.14	2.13	2.14	1.96	1.73	1.80	2.10	2.29	2.40	2.64
	75.2°F (24°C)	62.6°F (17°C)	TC	34.44	33.62	32.80	27.48	30.11	32.90	31.50	29.44	27.96	25.31	24.25	20.97	13.61
			SC	25.23	24.62	24.02	20.13	22.06	24.10	23.07	21.56	20.48	18.54	17.76	15.36	9.97
			Input	2.36	2.37	2.39	2.54	2.53	2.54	2.36	2.13	2.20	2.50	2.69	2.80	3.04
	80.6°F (27°C)	66.2°F (19°C)	TC	37.22	36.40	35.58	30.26	32.90	35.68	34.28	32.22	30.74	28.10	27.03	23.75	16.39
			SC	25.17	24.61	24.05	20.46	22.24	24.12	23.17	21.78	20.78	18.99	18.28	16.06	11.08
			Input	2.56	2.58	2.59	2.74	2.73	2.74	2.56	2.33	2.40	2.71	2.89	3.00	3.24
	89.6°F (32°C)	73.4°F (23°C)	TC	42.44	41.62	40.80	35.48	38.11	40.90	39.49	37.44	35.95	33.31	32.25	28.96	21.60
			SC	28.85	28.29	27.73	24.12	25.91	27.80	26.84	25.45	24.44	22.64	21.92	19.69	14.68
			Input	2.90	2.92	2.94	3.08	3.08	3.08	2.91	2.68	2.75	3.05	3.24	3.34	3.59

LEGEND

DB - Dry Bulb
WB - Wet Bulb
TC - Total Net Capacity (1000 Btu/hour)
SC - Sensible Capacity (1000 Btu/hour)
Input - Total Power (kW)

NOTE: Values in grey are extrapolated based on tested performance.

HEATING PERFORMANCE - DUCTED

MODEL	HEATING Indoor Conditions DB		OUTDOOR CONDITIONS (DB) -22°F (-30°C)	-13°F (-25°C)	-4°F (-20°C)	0°F (-17°C)	5°F (-15°C)	17°F (-8°C)	19.4°F (-7°C)	24.8°F (-4°C)	32°F (0°C)	39.2°F (4°C)	44.6°F (7°C)	53.6°F (12°C)
09K	59°F (15°C)	TC	5.43	7.05	9.61	10.86	10.83	13.82	14.18	14.73	16.31	18.97	16.04	15.47
		Input	1.39	1.45	1.43	1.51	1.51	1.70	1.73	1.77	1.81	2.08	1.36	1.13
		COP	1.15	1.42	1.97	2.11	2.10	2.37	2.39	2.43	2.63	2.67	3.47	4.02
	64.4°F (18°C)	TC	5.47	7.08	9.64	10.90	10.87	13.85	14.21	14.76	16.34	19.00	16.07	15.51
		Input	1.42	1.49	1.46	1.54	1.55	1.74	1.77	1.80	1.85	2.11	1.39	1.16
		COP	1.13	1.40	1.93	2.07	2.06	2.34	2.36	2.40	2.59	2.63	3.39	3.91
	69°F (20.5°C)	TC	5.50	7.11	9.67	10.93	10.90	13.88	14.24	14.79	16.37	19.03	16.10	15.53
		Input	1.39	1.45	1.43	1.51	1.51	1.70	1.73	1.77	1.81	2.08	1.36	1.13
		COP	1.15	1.42	1.97	2.11	2.10	2.37	2.39	2.43	2.63	2.67	3.47	4.02
	71.6°F (22°C)	TC	4.25	5.86	8.42	9.67	9.65	12.63	12.99	13.54	15.12	17.78	14.85	14.28
		Input	1.47	1.53	1.51	1.59	1.59	1.78	1.81	1.85	1.89	2.16	1.44	1.21
		COP	0.85	1.12	1.63	1.78	1.78	2.08	2.10	2.14	2.34	2.41	3.03	3.47
12K	59°F (15°C)	TC	6.24	7.85	10.63	11.81	12.65	13.82	14.25	14.66	15.36	18.19	15.55	15.48
		Input	1.40	1.55	1.70	1.74	1.79	1.64	1.67	1.69	1.65	2.00	1.35	1.12
		COP	1.31	1.48	1.83	1.99	2.07	2.47	2.50	2.55	2.73	2.67	3.38	4.04
	64.4°F (18°C)	TC	6.25	7.86	10.64	11.82	12.66	13.83	14.26	14.68	15.38	18.20	15.56	15.49
		Input	1.40	1.55	1.70	1.74	1.79	1.64	1.67	1.69	1.65	2.00	1.35	1.13
		COP	1.31	1.48	1.83	1.99	2.07	2.47	2.50	2.55	2.73	2.67	3.38	4.04
	69°F (20.5°C)	TC	6.26	7.87	10.65	11.83	12.67	13.84	14.27	14.69	15.38	18.21	15.57	15.50
		Input	1.40	1.55	1.70	1.74	1.79	1.64	1.67	1.69	1.65	2.00	1.35	1.13
		COP	1.31	1.48	1.83	2.00	2.07	2.47	2.50	2.55	2.73	2.67	3.38	4.03
	71.6°F (22°C)	TC	6.27	7.87	10.65	11.83	12.68	13.85	14.27	14.69	15.39	18.21	15.57	15.51
		Input	1.40	1.55	1.70	1.74	1.79	1.64	1.67	1.69	1.65	2.00	1.35	1.13
		COP	1.31	1.49	1.83	2.00	2.07	2.47	2.50	2.55	2.73	2.67	3.38	4.03
18K	59°F (15°C)	TC	11.25	13.83	17.40	17.82	19.66	23.98	21.73	26.15	22.81	24.52	23.19	22.72
		Input	1.90	2.23	2.50	2.46	2.71	3.01	2.91	3.12	2.34	2.21	1.87	1.76
		COP	1.74	1.82	2.04	2.12	2.12	2.34	2.19	2.45	2.86	3.25	3.64	3.78
	64.4°F (18°C)	TC	10.66	13.24	16.81	17.23	19.07	23.39	21.13	25.55	22.22	23.93	22.59	22.13
		Input	1.88	2.22	2.49	2.45	2.70	2.99	2.89	3.11	2.32	2.19	1.85	1.79
		COP	1.66	1.75	1.98	2.06	2.07	2.29	2.14	2.41	2.81	3.20	3.57	3.62
	69°F (20.5°C)	TC	10.15	12.73	16.30	16.72	18.56	22.88	20.63	25.05	21.71	23.42	22.09	21.62
		Input	1.87	2.20	2.48	2.43	2.68	2.98	2.88	3.09	2.31	2.18	1.84	1.76
		COP	1.59	1.69	1.93	2.02	2.03	2.25	2.10	2.37	2.76	3.15	3.52	3.78
	71.6°F (22°C)	TC	9.87	12.45	16.01	16.43	18.27	22.59	20.34	24.76	21.43	23.14	21.80	21.40
		Input	1.86	2.19	2.47	2.42	2.68	2.97	2.87	3.09	2.30	2.17	1.83	1.83
		COP	1.56	1.66	1.90	1.99	2.00	2.23	2.08	2.35	2.73	3.12	3.49	3.42
24K	59°F (15°C)	TC	15.46	19.02	24.71	26.07	27.69	27.74	28.12	31.90	35.73	34.87	32.26	32.33
		Input	2.53	2.98	3.22	3.14	3.26	2.92	2.95	3.24	3.35	3.10	2.27	1.96
		COP	1.79	1.87	2.25	2.44	2.49	2.79	2.79	2.88	3.12	3.30	4.16	4.83
	64.4°F (18°C)	TC	15.56	19.12	24.80	26.17	27.78	27.84	28.22	31.99	35.83	34.97	32.36	32.43
		Input	2.53	2.98	3.22	3.14	3.26	2.92	2.95	3.25	3.36	3.10	2.28	1.96
		COP	1.80	1.88	2.25	2.44	2.50	2.79	2.80	2.89	3.13	3.30	4.17	4.84
	69°F (20.5°C)	TC	15.64	19.20	24.88	26.25	27.86	27.92	28.30	32.08	35.91	35.05	32.44	32.51
		Input	2.54	2.98	3.23	3.14	3.26	2.92	2.95	3.25	3.36	3.10	2.28	1.97
		COP	1.81	1.89	2.26	2.45	2.50	2.80	2.81	2.89	3.13	3.31	4.17	4.85
	71.6°F (22°C)	TC	15.69	19.25	24.93	26.30	27.91	27.97	28.34	32.12	35.96	35.10	32.48	32.56
		Input	2.54	2.98	3.23	3.14	3.26	2.92	2.96	3.25	3.36	3.11	2.28	1.97
		COP	1.81	1.89	2.26	2.45	2.51	2.80	2.81	2.90	3.14	3.31	4.18	4.85

LEGEND

DB - Dry Bulb
TC - Total Net Capacity (1000 Btu/hour)
Input - Total Power (kW)
COP - W/W

COOLING PERFORMANCE - DUCTED MIX-MATCH

MODEL	COOLING			OUTDOOR CONDITIONS (DB)												
	INDOOR CONDITIONS DB	WB		(-22°F) (-25°C)	-13°F (-25°C)	-4°F (-20°C)	0°F (-17°C)	5°F (-15°C)	17°F (-8°C)	47°F (8°C)	77°F (25°C)	86°F (30°C	95°F (35°C)	104°F (40°C)	113°F (45°C)	122°F (50°C)
18KODU-24KIDU (208-230V)	69.8°F (21°C)	59°F (15°C)	TC	20.53	20.19	19.86	18.90	18.73	18.92	17.51	18.86	17.41	19.64	17.86	13.45	10.79
			SC	17.70	17.41	17.12	16.54	16.48	4.87	15.91	16.58	15.92	16.93	16.10	13.45	10.79
			Input	0.69	0.76	0.84	0.97	1.00	0.99	1.14	1.21	1.34	1.93	2.10	1.81	1.79
	75.2°F (24°C)	62.6°F (17°C)	TC	22.66	22.32	21.98	21.02	20.86	21.04	19.63	20.98	19.54	21.77	19.98	15.57	12.91
			SC	19.11	18.83	18.54	17.73	17.60	17.75	16.56	17.70	16.48	18.36	16.86	13.14	10.89
			Input	0.76	0.84	0.91	1.04	1.07	1.06	1.21	1.28	1.41	2.00	2.17	1.89	1.87
	80.6°F (2°C)	66.2°F (19°C)	TC	24.46	24.13	23.79	22.83	22.67	22.85	21.44	22.79	21.34	23.57	21.79	17.38	14.72
			SC	20.38	20.10	19.81	19.01	18.88	19.03	17.86	18.98	17.78	19.63	18.15	14.47	12.26
			Input	0.83	0.90	0.98	1.11	1.13	1.13	1.28	1.34	1.48	2.06	2.23	1.95	1.93
	89.6°F (32°C)	73.4°F (23°C)	TC	27.80	27.46	27.12	26.16	26.00	26.18	24.77	26.12	24.68	26.91	25.12	20.71	18.05
			SC	21.28	21.02	20.76	20.02	19.90	20.04	18.96	20.00	18.89	20.59	19.23	15.85	13.82
			Input	0.95	1.02	1.10	1.23	1.25	1.25	1.40	1.46	1.60	2.18	2.35	2.07	2.05

HEATING PERFORMANCE - DUCTED MIX-MATCH

MODEL	HEATING		OUTDOOR CONDITIONS (DB)											
	INDOOR CONDITIONS DB		-22°F (-30°C)	-13°F (-25°C)	-4°F (-20°C)	0°F (-17°C)	5°F (-15°C)	17°F (-8°C)	19.4°F (-7°C)	24.8°F (-4°C)	32°°F (0C)	39.2°F (4°C)	44.6°F (7°C)	53.6°F (12°C)
18KODU-24KIDU(208-230V)	59°F (15°C)	TC	10.34	14.27	15.74	11.49	16.74	22.97	23.49	25.97	26.40	20.40	23.54	26.89
		Input	1.90	1.93	1.96	1.74	2.08	2.42	2.47	2.45	2.30	1.84	1.67	1.74
		COP	1.67	2.16	2.35	1.94	2.36	2.78	2.79	3.11	3.02	3.23	4.13	4.52
	64.4°F (18°C)	TC	10.48	14.42	15.89	11.63	16.89	23.12	23.64	26.11	26.54	20.55	23.69	27.04
		Input	1.97	2.01	2.04	1.82	2.16	2.50	2.55	2.53	2.38	1.92	1.75	1.82
		COP	1.56	2.10	2.28	1.88	2.30	2.71	2.72	3.03	3.27	3.13	3.97	4.35
	69°F (20.5°C)	TC	10.61	14.55	16.02	11.76	17.01	23.24	23.76	26.24	26.67	20.67	23.82	27.16
		Input	1.90	1.93	1.96	1.74	2.08	2.42	2.47	2.45	2.30	1.84	1.67	1.74
		COP	1.67	2.16	2.35	1.94	2.36	2.78	2.79	3.11	3.02	3.23	4.13	4.52
	71.6°F (22°C)	TC	10.35	14.29	15.76	11.50	16.76	22.99	23.51	25.98	26.41	20.42	23.56	26.91
		Input	2.08	2.12	2.14	1.92	2.26	2.60	2.65	2.63	2.48	2.03	1.86	1.93
		COP	1.46	1.98	2.15	1.75	2.17	2.59	2.60	2.89	3.12	2.95	3.72	4.09

Manufacturer reserves the right to change, at any time, specifications and designs without notice and without obligations.

COOLING PERFORMANCE - AHU

COOLING PERFORMANCE AT INDOOR DRY BULB TEMPERATURE SIZE 18K

COOLING PERFORMANCE AT INDOOR DRY BULB TEMPERATURE SIZE 18 (Sheet 1 of 3)

AIRFLOW (CFM)	OUTDOOR DB°F	ID WB(°F)	60.8				64.4				66.2				71.6			
		ID DB(°F)	73.4	77.0	80.6	84.2	73.4	77.0	80.6	84.2	73.4	77.0	80.6	84.2	73.4	77.0	80.6	84.2
489	-22	TC	19069	19079	19287	19496	19971	20393	20393	20599	20467	20467	20467	20467	21549	21549	21549	21549
		S/T	0.72	0.83	0.92	0.95	0.57	0.67	0.76	0.86	0.49	0.59	0.68	0.77	0.33	0.42	0.50	0.59
		PI	1.20	1.20	1.20	1.20	1.21	1.21	1.21	1.21	1.20	1.20	1.20	1.20	1.22	1.22	1.22	1.22
	-10	TC	18928	18938	19145	19352	19858	20277	20277	20482	20365	20365	20365	20365	21483	21483	21483	21483
		S/T	0.73	0.83	0.93	0.96	0.57	0.67	0.77	0.86	0.50	0.59	0.69	0.78	0.34	0.42	0.51	0.59
		PI	1.09	1.09	1.09	1.09	1.10	1.10	1.10	1.10	1.09	1.09	1.09	1.09	1.10	1.10	1.10	1.10
	0	TC	18810	18821	19026	19232	19763	20181	20181	20384	20279	20279	20279	20279	21429	21429	21429	21429
		S/T	0.73	0.84	0.93	0.96	0.58	0.67	0.77	0.87	0.50	0.60	0.69	0.78	0.34	0.42	0.51	0.60
		PI	1.02	1.02	1.02	1.02	1.02	1.02	1.02	1.02	1.01	1.01	1.01	1.01	1.02	1.02	1.02	1.02
	5	TC	18755	18766	18971	19176	19727	20144	20144	20347	20249	20249	20249	20249	21414	21414	21414	21414
		S/T	0.73	0.84	0.94	0.97	0.58	0.68	0.77	0.87	0.50	0.60	0.70	0.78	0.34	0.42	0.51	0.60
		PI	0.96	0.96	0.96	0.96	0.96	0.96	0.96	0.96	0.95	0.95	0.95	0.95	0.95	0.95	0.95	0.95
	14	TC	18644	18654	18858	19062	19616	20031	20031	20233	20147	20147	20147	20147	21342	21342	21342	21342
		S/T	0.74	0.84	0.94	0.97	0.58	0.68	0.78	0.87	0.50	0.60	0.70	0.79	0.34	0.43	0.51	0.60
		PI	0.95	0.95	0.95	0.95	0.96	0.96	0.96	0.96	0.95	0.95	0.95	0.95	0.95	0.95	0.95	0.95
	23	TC	18533	18543	18746	18948	19542	19955	19955	20157	20073	20073	20073	20073	21288	21288	21288	21288
		S/T	0.74	0.85	0.95	0.98	0.59	0.68	0.78	0.88	0.51	0.60	0.70	0.79	0.34	0.43	0.52	0.60
		PI	0.95	0.95	0.95	0.95	0.95	0.95	0.95	0.95	0.95	0.95	0.95	0.95	0.95	0.95	0.95	0.95
	32	TC	18440	18450	18652	18854	19468	19880	19880	20080	20018	20018	20018	20018	21270	21270	21270	21270
		S/T	0.74	0.85	0.95	0.98	0.59	0.69	0.78	0.88	0.51	0.61	0.71	0.79	0.34	0.43	0.52	0.61
		PI	0.96	0.95	0.95	0.96	0.96	0.96	0.96	0.96	0.95	0.95	0.95	0.95	0.96	0.96	0.96	0.96
	41	TC	18348	18358	18558	18759	19395	19804	19804	20004	19953	19953	19953	19953	21251	21251	21251	21251
		S/T	0.75	0.86	0.96	0.99	0.59	0.69	0.79	0.89	0.51	0.61	0.71	0.80	0.34	0.43	0.52	0.61
		PI	0.96	0.96	0.96	0.96	0.97	0.97	0.97	0.97	0.96	0.96	0.96	0.96	0.96	0.96	0.96	0.96
	50	TC	18236	18246	18446	18645	19302	19710	19710	19909	19870	19870	19870	19870	21197	21197	21197	21197
		S/T	0.75	0.86	0.96	0.99	0.59	0.69	0.79	0.89	0.51	0.61	0.71	0.80	0.35	0.44	0.52	0.61
		PI	0.98	0.98	0.98	0.98	0.98	0.98	0.98	0.98	0.97	0.97	0.97	0.97	0.98	0.98	0.98	0.98
	59	TC	18088	18098	18296	18494	19173	19578	19578	19776	19750	19750	19750	19750	21106	21106	21106	21106
		S/T	0.76	0.87	0.97	1.00	0.60	0.70	0.80	0.90	0.52	0.62	0.72	0.81	0.35	0.44	0.53	0.62
		PI	1.00	1.00	1.00	1.00	1.00	1.00	1.00	1.00	1.00	1.00	1.00	1.00	1.00	1.00	1.00	1.00
	68	TC	17884	17894	18090	18285	18970	18970	18970	19165	19556	19556	19556	19556	20925	20925	20925	20925
		S/T	0.76	0.87	0.97	1.00	0.60	0.70	0.80	0.90	0.52	0.62	0.72	0.81	0.35	0.44	0.53	0.62
		PI	1.04	1.04	1.04	1.04	1.04	1.04	1.04	1.04	1.03	1.03	1.03	1.03	1.03	1.03	1.03	1.03
	77	TC	17014	17210	17405	17601	18090	18090	18090	18285	18676	18676	18676	18676	20045	20045	20045	20045
		S/T	0.78	0.88	0.99	1.00	0.61	0.71	0.82	0.92	0.53	0.63	0.73	0.83	0.34	0.44	0.53	0.63
		PI	1.15	1.15	1.15	1.15	1.15	1.15	1.15	1.15	1.15	1.15	1.15	1.15	1.15	1.15	1.15	1.15
	86	TC	16232	16427	16623	16818	17307	17307	17307	17503	17796	17796	17796	17796	19165	19165	19165	19165
		S/T	0.79	0.90	1.00	1.00	0.61	0.72	0.83	0.94	0.53	0.64	0.74	0.85	0.34	0.44	0.54	0.64
		PI	1.25	1.25	1.25	1.25	1.25	1.25	1.25	1.25	1.25	1.25	1.25	1.25	1.26	1.26	1.26	1.26
	95	TC	15450	15645	15841	16036	16427	16427	16427	16623	16916	16916	17210	16916	18285	18285	18285	18285
		S/T	0.81	0.92	1.00	1.00	0.62	0.74	0.85	0.96	0.54	0.65	0.75	0.87	0.34	0.44	0.55	0.65
		PI	1.37	1.37	1.37	1.37	1.38	1.38	1.38	1.38	1.38	1.38	1.38	1.38	1.39	1.39	1.39	1.39
	104	TC	14607	14759	14910	15062	15543	15543	15588	15740	16034	16034	16194	16123	17318	17318	17318	17318
		S/T	0.84	0.97	1.00	1.00	0.64	0.76	0.89	1.00	0.54	0.67	0.79	0.91	0.33	0.45	0.56	0.67
		PI	1.51	1.51	1.51	1.51	1.52	1.52	1.52	1.52	1.52	1.52	1.52	1.52	1.53	1.53	1.53	1.53
	115	TC	13537	13635	13733	13831	14420	14420	14518	14616	14910	14910	14910	15106	16087	16087	16087	16087
		S/T	0.85	0.99	1.00	1.00	0.65	0.78	0.91	1.00	0.55	0.68	0.80	0.93	0.33	0.45	0.57	0.69
		PI	1.68	1.68	1.68	1.68	1.69	1.69	1.69	1.69	1.69	1.69	1.69	1.69	1.70	1.70	1.70	1.70
	122	TC	12654	12752	12850	12948	13537	13537	13635	13733	14027	14027	14027	14125	15204	15204	15204	15204
		S/T	0.88	1.00	1.00	1.00	0.66	0.80	0.94	1.00	0.56	0.69	0.83	0.96	0.33	0.45	0.58	0.70
		PI	1.82	1.82	1.82	1.82	1.83	1.83	1.83	1.83	1.83	1.83	1.83	1.83	1.85	1.85	1.85	1.85

Manufacturer reserves the right to change, at any time, specifications and designs without notice and without obligations.

COOLING PERFORMANCE AT INDOOR DRY BULB TEMPERATURE SIZE 18 (Sheet 2 of 3)

AIRFLOW (CFM)	OUTDOOR DB°F	ID WB(°F)	60.8				64.4				66.2				71.6			
		ID DB(°F)	73.4	77.0	80.6	84.2	73.4	77.0	80.6	84.2	73.4	77.0	80.6	84.2	73.4	77.0	80.6	84.2
530	-22	TC	19506	19714	19923	20131	20393	20393	20393	20599	20886	20886	20886	20886	22063	22063	22063	22063
		S/T	0.74	0.85	0.97	1.00	0.58	0.68	0.78	0.87	0.50	0.60	0.69	0.80	0.32	0.42	0.51	0.60
		PI	1.20	1.20	1.20	1.20	1.21	1.21	1.21	1.21	1.20	1.20	1.20	1.20	1.22	1.22	1.22	1.22
	-10	TC	19362	19569	19776	19983	20277	20277	20277	20482	20782	20782	20782	20782	21996	21996	21996	21996
		S/T	0.75	0.85	0.97	1.00	0.58	0.68	0.79	0.88	0.51	0.60	0.70	0.80	0.33	0.42	0.52	0.60
		PI	1.09	1.09	1.09	1.09	1.10	1.10	1.10	1.10	1.09	1.09	1.09	1.09	1.10	1.10	1.10	1.10
	0	TC	19241	19447	19653	19859	20181	20181	20181	20384	20695	20695	20695	20695	21940	21940	21940	21940
		S/T	0.75	0.86	0.98	1.00	0.59	0.68	0.79	0.89	0.51	0.61	0.70	0.81	0.33	0.42	0.52	0.61
		PI	1.04	1.04	1.04	1.04	1.04	1.04	1.04	1.04	1.05	1.05	1.05	1.05	1.05	1.05	1.05	1.05
	5	TC	19185	19390	19596	19801	20144	20144	20144	20347	20664	20664	20664	20664	21926	21926	21926	21926
		S/T	0.75	0.86	0.98	1.00	0.59	0.69	0.79	0.89	0.51	0.61	0.70	0.81	0.33	0.42	0.52	0.61
		PI	0.98	0.98	0.98	0.98	0.98	0.98	0.98	0.98	0.98	0.98	0.98	0.98	0.97	0.97	0.97	0.97
	14	TC	19072	19275	19479	19683	20031	20031	20031	20233	20560	20560	20560	20560	21851	21851	21851	21851
		S/T	0.76	0.86	0.99	1.00	0.59	0.69	0.80	0.89	0.51	0.61	0.71	0.82	0.33	0.43	0.52	0.61
		PI	0.97	0.97	0.97	0.97	0.97	0.97	0.97	0.97	0.98	0.98	0.98	0.98	0.97	0.97	0.97	0.97
	23	TC	18958	19161	19363	19566	19955	19955	19955	20157	20485	20485	20485	20485	21796	21796	21796	21796
		S/T	0.76	0.87	0.99	1.00	0.59	0.69	0.80	0.90	0.52	0.61	0.71	0.82	0.33	0.43	0.53	0.61
		PI	0.97	0.97	0.97	0.97	0.97	0.97	0.97	0.97	0.98	0.98	0.98	0.98	0.97	0.97	0.97	0.97
	32	TC	18863	19065	19266	19468	19880	19880	19880	20080	20428	20428	20428	20428	21777	21777	21777	21777
		S/T	0.76	0.87	1.00	1.00	0.60	0.70	0.80	0.90	0.52	0.62	0.72	0.82	0.33	0.43	0.53	0.62
		PI	0.97	0.97	0.97	0.97	0.98	0.98	0.98	0.98	0.98	0.98	0.98	0.98	0.98	0.98	0.98	0.98
	41	TC	18768	18969	19170	19370	19804	19804	19804	20004	20363	20363	20363	20363	21759	21759	21759	21759
		S/T	0.77	0.88	1.00	1.00	0.60	0.70	0.81	0.91	0.52	0.62	0.72	0.83	0.33	0.43	0.53	0.62
		PI	0.98	0.98	0.98	0.98	0.98	0.98	0.98	0.98	0.99	0.99	0.99	0.99	0.98	0.98	0.98	0.98
	50	TC	18654	18854	19053	19253	19710	19710	19710	19909	20278	20278	20278	20278	21703	21703	21703	21703
		S/T	0.77	0.88	1.00	1.00	0.60	0.70	0.81	0.91	0.52	0.62	0.72	0.83	0.34	0.44	0.53	0.62
		PI	1.00	1.00	1.00	1.00	1.00	1.00	1.00	1.00	1.00	1.00	1.00	1.00	1.00	1.00	1.00	1.00
	59	TC	18503	18701	18899	19096	19578	19578	19578	19776	20155	20155	20155	20155	21610	21610	21610	21610
		S/T	0.78	0.89	0.99	1.00	0.61	0.71	0.82	0.92	0.53	0.63	0.73	0.84	0.34	0.44	0.54	0.63
		PI	1.02	1.02	1.02	1.02	1.02	1.02	1.02	1.02	1.02	1.02	1.02	1.02	1.02	1.02	1.02	1.02
	68	TC	18294	18490	18686	18881	19370	19370	19370	19566	19957	19957	19957	19957	21425	21425	21425	21425
		S/T	0.78	0.89	0.99	1.00	0.61	0.71	0.82	0.92	0.53	0.63	0.73	0.84	0.34	0.44	0.54	0.63
		PI	1.06	1.06	1.06	1.06	1.06	1.06	1.06	1.06	1.06	1.06	1.06	1.06	1.05	1.05	1.05	1.05
	77	TC	17414	17609	17805	18001	18490	18490	18490	18686	19077	19077	19077	19077	20544	20544	20544	20544
		S/T	0.79	0.91	1.00	1.00	0.62	0.73	0.84	0.94	0.53	0.64	0.75	0.86	0.34	0.44	0.54	0.64
		PI	1.17	1.17	1.17	1.17	1.17	1.17	1.17	1.17	1.17	1.17	1.17	1.17	1.17	1.17	1.17	1.17
	86	TC	16631	16827	17022	17218	17707	17707	17707	17903	18196	18196	18196	18196	19664	19664	19664	19664
		S/T	0.81	0.93	1.00	1.00	0.62	0.74	0.85	0.97	0.54	0.65	0.76	0.88	0.34	0.44	0.55	0.65
		PI	1.28	1.28	1.28	1.28	1.28	1.28	1.28	1.28	1.28	1.28	1.28	1.28	1.29	1.29	1.29	1.29
	95	TC	15751	15946	16142	16338	16827	16827	16827	17022	17316	17316	17609	17805	18686	18686	18686	18686
		S/T	0.83	0.95	1.00	1.00	0.63	0.75	0.88	0.99	0.54	0.66	0.77	0.89	0.34	0.45	0.56	0.67
		PI	1.40	1.40	1.40	1.40	1.41	1.41	1.41	1.41	1.41	1.41	1.41	1.41	1.41	1.41	1.41	1.41
	104	TC	14814	14965	15116	15266	15798	15798	15887	16082	16286	16286	16445	16640	17607	17607	17607	17607
		S/T	0.86	1.00	1.00	1.00	0.65	0.78	0.91	1.00	0.55	0.68	0.81	0.93	0.33	0.45	0.57	0.69
		PI	1.55	1.55	1.55	1.55	1.56	1.56	1.56	1.56	1.56	1.56	1.56	1.56	1.57	1.57	1.57	1.57
	115	TC	13750	13848	13945	14043	14628	14628	14823	15018	15116	15116	15116	15311	16383	16383	16383	16383
		S/T	0.88	1.00	1.00	1.00	0.66	0.80	0.93	1.00	0.56	0.69	0.83	0.96	0.33	0.45	0.58	0.70
		PI	1.72	1.72	1.72	1.72	1.73	1.73	1.73	1.73	1.74	1.74	1.74	1.74	1.75	1.75	1.75	1.75
	122	TC	12873	12970	13068	13165	13750	13750	13848	13945	14238	14238	14238	14335	15408	15408	15408	15408
		S/T	0.90	1.00	1.00	1.00	0.67	0.82	0.97	1.00	0.57	0.71	0.85	0.99	0.32	0.46	0.59	0.91
		PI	1.87	1.87	1.87	1.87	1.88	1.88	1.88	1.88	1.88	1.88	1.88	1.88	1.90	1.90	1.90	1.90

Manufacturer reserves the right to change, at any time, specifications and designs without notice and without obligations.

COOLING PERFORMANCE AT INDOOR DRY BULB TEMPERATURE SIZE 18 (Sheet 3 of 3)

AIRFLOW (CFM)	OUTDOOR DB°F	ID WB(°F)	60.8				64.4				66.2				71.6			
		ID DB(°F)	73.4	77.0	80.6	84.2	73.4	77.0	80.6	84.2	73.4	77.0	80.6	84.2	73.4	77.0	80.6	84.2
577	-22	TC	19923	20131	20340	20549	20908	20908	20908	21114	21398	21398	21398	21398	22567	22567	22567	22567
		S/T	0.76	0.87	1.00	1.00	0.59	0.69	0.80	0.96	0.50	0.61	0.71	0.82	0.32	0.42	0.51	0.62
		PI	1.20	1.20	1.20	1.20	1.21	1.21	1.21	1.21	1.20	1.20	1.20	1.20	1.22	1.22	1.22	1.22
	-10	TC	19776	19983	20190	20397	20789	20789	20789	20994	21292	21292	21292	21292	22498	22498	22498	22498
		S/T	0.77	0.87	1.00	1.00	0.59	0.70	0.80	0.97	0.51	0.61	0.72	0.82	0.33	0.42	0.52	0.62
		PI	1.09	1.09	1.09	1.09	1.10	1.10	1.10	1.10	1.09	1.09	1.09	1.09	1.10	1.10	1.10	1.10
	0	TC	19653	19859	20065	20270	20690	20690	20690	20894	21202	21202	21202	21202	22441	22441	22441	22441
		S/T	0.77	0.88	1.00	1.00	0.60	0.70	0.81	0.97	0.51	0.62	0.72	0.83	0.33	0.42	0.52	0.63
		PI	1.07	1.07	1.07	1.07	1.06	1.06	1.06	1.06	1.06	1.06	1.06	1.06	1.06	1.06	1.06	1.06
	5	TC	19596	19801	20006	20211	20652	20652	20652	20856	21171	21171	21171	21171	22426	22426	22426	22426
		S/T	0.77	0.88	1.00	1.00	0.60	0.70	0.81	0.98	0.51	0.62	0.72	0.83	0.33	0.42	0.52	0.63
		PI	1.00	1.00	1.00	1.00	0.99	0.99	0.99	0.99	1.00	1.00	1.00	1.00	0.99	0.99	0.99	0.99
	14	TC	19479	19683	19887	20091	20536	20536	20536	20739	21064	21064	21064	21064	22350	22350	22350	22350
		S/T	0.78	0.88	1.00	1.00	0.60	0.71	0.82	0.98	0.51	0.62	0.73	0.83	0.33	0.43	0.52	0.63
		PI	1.00	1.00	1.00	1.00	0.99	0.99	0.99	0.99	0.99	0.99	0.99	0.99	0.99	0.99	0.99	0.99
	23	TC	19363	19566	19769	19972	20459	20459	20459	20661	20987	20987	20987	20987	22293	22293	22293	22293
		S/T	0.78	0.89	1.00	1.00	0.60	0.71	0.82	0.99	0.52	0.62	0.73	0.84	0.33	0.43	0.53	0.63
		PI	1.00	1.00	1.00	1.00	0.99	0.99	0.99	0.99	0.99	0.99	0.99	0.99	0.99	0.99	0.99	0.99
	32	TC	19266	19468	19670	19872	20382	20382	20382	20582	20929	20929	20929	20929	22274	22274	22274	22274
		S/T	0.78	0.89	1.00	1.00	0.61	0.72	0.82	0.99	0.52	0.63	0.74	0.84	0.33	0.43	0.53	0.64
		PI	1.00	1.00	1.00	1.00	0.99	0.99	0.99	0.99	1.00	1.00	1.00	1.00	0.99	0.99	0.99	0.99
	41	TC	19170	19370	19571	19772	20304	20304	20304	20504	20862	20862	20862	20862	22255	22255	22255	22255
		S/T	0.79	0.90	1.00	1.00	0.61	0.72	0.83	1.00	0.52	0.63	0.74	0.85	0.33	0.43	0.53	0.64
		PI	1.01	1.01	1.01	1.01	1.00	1.00	1.00	1.00	1.01	1.01	1.01	1.01	1.00	1.00	1.00	1.00
	50	TC	19053	19253	19452	19652	20208	20208	20208	20407	20775	20775	20775	20775	22199	22199	22199	22199
		S/T	0.79	0.90	1.00	1.00	0.61	0.72	0.83	1.00	0.52	0.63	0.74	0.85	0.34	0.44	0.53	0.64
		PI	1.03	1.03	1.03	1.03	1.02	1.02	1.02	1.02	1.02	1.02	1.02	1.02	1.02	1.02	1.02	1.02
	59	TC	18899	19096	19294	19492	20072	20072	20072	20270	20649	20649	20649	20649	22104	22104	22104	22104
		S/T	0.80	0.91	1.00	1.00	0.62	0.73	0.84	0.95	0.53	0.64	0.75	0.86	0.34	0.44	0.54	0.65
		PI	1.05	1.05	1.05	1.05	1.04	1.04	1.04	1.04	1.04	1.04	1.04	1.04	1.04	1.04	1.04	1.04
	68	TC	18686	18881	19077	19273	19860	19860	19860	20055	20447	20447	20447	20447	21914	21914	21914	21914
		S/T	0.80	0.91	1.00	1.00	0.62	0.73	0.84	0.95	0.53	0.64	0.75	0.86	0.34	0.44	0.54	0.65
		PI	1.09	1.09	1.09	1.09	1.08	1.08	1.08	1.08	1.08	1.08	1.08	1.08	1.07	1.07	1.07	1.07
	77	TC	17805	18001	18196	18392	18979	18979	18979	19175	19566	19566	19566	19566	21033	21033	21033	21033
		S/T	0.81	0.93	1.00	1.00	0.62	0.74	0.86	0.97	0.54	0.65	0.77	0.88	0.34	0.44	0.55	0.66
		PI	1.20	1.20	1.20	1.20	1.20	1.20	1.20	1.20	1.20	1.20	1.20	1.20	1.20	1.20	1.20	1.20
	86	TC	17022	17218	17414	17609	18099	18099	18099	18294	18588	18588	18588	18783	20055	20055	20055	20055
		S/T	0.83	0.96	1.00	1.00	0.63	0.76	0.88	1.00	0.54	0.66	0.78	0.90	0.33	0.45	0.56	0.67
		PI	1.30	1.30	1.30	1.30	1.31	1.31	1.31	1.31	1.31	1.31	1.31	1.31	1.31	1.31	1.31	1.31
	95	TC	16142	16338	16533	16729	17218	17218	17414	17609	17707	17707	18001	18196	19077	19077	19077	19077
		S/T	0.85	0.98	1.00	1.00	0.64	0.77	0.90	1.00	0.55	0.67	0.80	0.91	0.33	0.45	0.57	0.68
		PI	1.43	1.43	1.43	1.43	1.43	1.43	1.43	1.43	1.44	1.44	1.44	1.44	1.45	1.45	1.45	1.45
	104	TC	15160	15311	15461	15612	16188	16188	16383	16578	16676	16676	16835	17030	17997	17997	17997	17997
		S/T	0.89	1.00	1.00	1.00	0.66	0.81	0.94	1.00	0.56	0.70	0.84	0.97	0.33	0.45	0.58	0.90
		PI	1.58	1.58	1.58	1.58	1.59	1.59	1.59	1.59	1.59	1.59	1.59	1.59	1.61	1.61	1.61	1.61
	115	TC	14043	14140	14238	14335	15018	15018	15213	15408	15506	15506	15506	15701	16773	16773	16773	16773
		S/T	0.90	1.00	1.00	1.00	0.67	0.82	0.96	1.00	0.57	0.71	0.85	0.99	0.32	0.46	0.59	0.92
		PI	1.76	1.76	1.76	1.76	1.77	1.77	1.77	1.77	1.77	1.77	1.77	1.77	1.79	1.79	1.79	1.79
	122	TC	13165	13263	13360	13458	14043	14043	14140	14238	14530	14530	14530	14628	15798	15798	15798	15798
		S/T	0.93	1.00	1.00	1.00	0.69	0.85	1.00	1.00	0.58	0.73	0.88	1.00	0.32	0.46	0.60	0.97
		PI	1.91	1.91	1.91	1.91	1.92	1.92	1.92	1.92	1.92	1.92	1.92	1.92	1.94	1.94	1.94	1.94

LEGEND
TC: Total Cooling Capacity (BTU/hr)
S/T: Sensible Cooling Capacity Ratio
PI: Power Input (kW)
Extrapolated Data - refers to grayed out content

COOLING PERFORMANCE AT INDOOR DRY BULB TEMPERATURE SIZE 24K

COOLING PERFORMANCE AT INDOOR DRY BULB TEMPERATURE SIZE 24 (Sheet 1 of 3)

AIRFLOW (CFM)	OUTDOOR DB°F	ID WB(°F)	60.8				64.4				66.2				71.6			
		ID DB(°F)	73.4	77.0	80.6	84.2	73.4	77.0	80.6	84.2	73.4	77.0	80.6	84.2	73.4	77.0	80.6	84.2
630	-22	TC	24387	24408	24617	24825	25542	26070	26070	26379	26108	26108	26108	26108	27604	27604	27604	27604
		S/T	0.73	0.83	0.93	0.95	0.57	0.67	0.76	0.86	0.49	0.59	0.68	0.78	0.33	0.42	0.50	0.59
		PI	1.54	1.54	1.54	1.54	1.55	1.55	1.55	1.55	1.55	1.55	1.55	1.55	1.56	1.56	1.56	1.56
	-10	TC	24207	24228	24435	24642	25397	25922	25922	26229	25978	25978	25978	25978	27520	27520	27520	27520
		S/T	0.74	0.83	0.94	0.96	0.57	0.67	0.77	0.86	0.50	0.59	0.69	0.79	0.34	0.42	0.51	0.59
		PI	1.39	1.39	1.39	1.39	1.40	1.40	1.40	1.40	1.40	1.40	1.40	1.40	1.40	1.40	1.40	1.40
	0	TC	24057	24078	24283	24489	25277	25798	25798	26104	25869	25869	25869	25869	27451	27451	27451	27451
		S/T	0.74	0.84	0.94	0.96	0.58	0.68	0.77	0.87	0.50	0.60	0.69	0.79	0.34	0.42	0.51	0.60
		PI	1.30	1.30	1.30	1.30	1.30	1.30	1.30	1.30	1.30	1.30	1.30	1.30	1.30	1.30	1.30	1.30
	5	TC	23987	24007	24212	24418	25230	25751	25751	26057	25830	25830	25830	25830	27432	27432	27432	27432
		S/T	0.74	0.84	0.95	0.97	0.58	0.68	0.77	0.87	0.50	0.60	0.70	0.79	0.34	0.42	0.51	0.60
		PI	1.22	1.22	1.22	1.22	1.22	1.22	1.22	1.22	1.22	1.22	1.22	1.22	1.21	1.21	1.21	1.21
	14	TC	23844	23865	24069	24273	25089	25607	25607	25910	25701	25701	25701	25701	27339	27339	27339	27339
		S/T	0.75	0.84	0.95	0.97	0.58	0.68	0.78	0.87	0.50	0.60	0.70	0.80	0.34	0.43	0.51	0.60
		PI	1.22	1.21	1.21	1.22	1.22	1.22	1.22	1.22	1.22	1.22	1.22	1.22	1.22	1.22	1.22	1.22
	23	TC	23702	23723	23925	24128	24994	25510	25510	25813	25606	25606	25606	25606	27270	27270	27270	27270
		S/T	0.75	0.85	0.96	0.98	0.59	0.68	0.78	0.88	0.51	0.60	0.70	0.80	0.34	0.43	0.52	0.60
		PI	1.21	1.21	1.21	1.21	1.21	1.21	1.21	1.21	1.22	1.22	1.22	1.22	1.22	1.22	1.22	1.22
	32	TC	23584	23604	23806	24007	24900	25414	25414	25715	25536	25536	25536	25536	27246	27246	27246	27246
		S/T	0.75	0.85	0.96	0.98	0.59	0.69	0.78	0.88	0.51	0.61	0.71	0.80	0.34	0.43	0.52	0.61
		PI	1.22	1.21	1.21	1.22	1.22	1.22	1.22	1.22	1.22	1.22	1.22	1.22	1.22	1.22	1.22	1.22
	41	TC	23465	23485	23686	23887	24805	25317	25317	25618	25453	25453	25453	25453	27223	27223	27223	27223
		S/T	0.76	0.86	0.97	0.99	0.59	0.69	0.79	0.89	0.51	0.61	0.71	0.81	0.34	0.43	0.52	0.61
		PI	1.23	1.23	1.23	1.23	1.23	1.23	1.23	1.23	1.23	1.23	1.23	1.23	1.23	1.23	1.23	1.23
	50	TC	23323	23343	23542	23742	24687	25197	25197	25496	25347	25347	25347	25347	27154	27154	27154	27154
		S/T	0.76	0.86	0.97	0.99	0.59	0.69	0.79	0.89	0.51	0.61	0.71	0.81	0.35	0.44	0.52	0.61
		PI	1.25	1.25	1.25	1.25	1.25	1.25	1.25	1.25	1.25	1.25	1.25	1.25	1.25	1.25	1.25	1.25
	59	TC	23133	23153	23351	23549	24522	25028	25028	25325	25194	25194	25194	25194	27038	27038	27038	27038
		S/T	0.77	0.87	0.98	1.00	0.60	0.70	0.80	0.90	0.52	0.62	0.72	0.82	0.35	0.44	0.53	0.62
		PI	1.28	1.28	1.28	1.28	1.28	1.28	1.28	1.28	1.28	1.28	1.28	1.28	1.27	1.27	1.27	1.27
	68	TC	22873	22892	23088	23284	24262	24262	24262	24458	24947	24947	24947	24947	26805	26805	26805	26805
		S/T	0.77	0.87	0.98	1.00	0.60	0.70	0.80	0.90	0.52	0.62	0.72	0.82	0.35	0.44	0.53	0.62
		PI	1.33	1.32	1.32	1.33	1.32	1.32	1.32	1.32	1.32	1.32	1.32	1.32	1.31	1.31	1.31	1.31
	77	TC	21816	22012	22207	22403	23186	23186	23186	23381	23871	23871	23871	23871	25632	25632	25632	25632
		S/T	0.78	0.89	0.99	1.00	0.61	0.71	0.82	0.92	0.53	0.63	0.73	0.84	0.34	0.44	0.53	0.63
		PI	1.46	1.46	1.46	1.46	1.46	1.46	1.46	1.46	1.46	1.46	1.46	1.46	1.46	1.46	1.46	1.46
	86	TC	20838	21033	21229	21425	22110	22110	22110	22305	22794	22794	22794	22794	24555	24555	24555	24555
		S/T	0.79	0.91	1.00	1.00	0.61	0.72	0.84	0.94	0.53	0.64	0.75	0.85	0.34	0.44	0.54	0.64
		PI	1.59	1.59	1.59	1.59	1.60	1.60	1.60	1.60	1.60	1.60	1.60	1.60	1.61	1.61	1.61	1.61
	95	TC	19762	19957	20153	20349	21033	21033	21033	21229	21718	21718	22012	21718	23381	23381	23381	23381
		S/T	0.81	0.93	1.00	1.00	0.62	0.74	0.85	0.97	0.54	0.65	0.76	0.87	0.34	0.44	0.55	0.65
		PI	1.75	1.75	1.75	1.75	1.75	1.75	1.75	1.75	1.76	1.76	1.76	1.76	1.77	1.77	1.77	1.77
	104	TC	18639	18835	19031	19227	19868	19868	19957	20153	20510	20510	20670	20599	22131	22131	22131	22131
		S/T	0.84	0.97	1.00	1.00	0.64	0.77	0.89	1.00	0.55	0.67	0.79	0.91	0.33	0.45	0.56	0.68
		PI	1.93	1.93	1.93	1.93	1.93	1.93	1.93	1.93	1.94	1.94	1.94	1.94	1.96	1.96	1.96	1.96
	115	TC	17249	17445	17641	17837	18425	18425	18621	18817	19013	19013	19013	19209	20581	20581	20581	20581
		S/T	0.86	0.99	1.00	1.00	0.65	0.78	0.91	1.00	0.55	0.68	0.81	0.93	0.33	0.45	0.57	0.69
		PI	2.14	2.14	2.14	2.14	2.15	2.15	2.15	2.15	2.16	2.16	2.16	2.16	2.18	2.18	2.18	2.18
	122	TC	16171	16367	16563	16759	17347	17347	17543	17739	17837	17837	17837	18033	19405	19405	19405	19405
		S/T	0.88	1.00	1.00	1.00	0.66	0.80	0.94	1.00	0.56	0.70	0.83	0.97	0.33	0.45	0.58	0.71
		PI	2.33	2.33	2.33	2.33	2.34	2.34	2.34	2.34	2.34	2.34	2.34	2.34	2.36	2.36	2.36	2.36

Manufacturer reserves the right to change, at any time, specifications and designs without notice and without obligations.

COOLING PERFORMANCE AT INDOOR DRY BULB TEMPERATURE SIZE 24 (Sheet 2 of 3)

AIRFLOW (CFM)	OUTDOOR DB°F	ID WB(°F)	60.8				64.4				66.2				71.6			
		ID DB(°F)	73.4	77.0	80.6	84.2	73.4	77.0	80.6	84.2	73.4	77.0	80.6	84.2	73.4	77.0	80.6	84.2
695	-22	TC	24941	25150	25359	25568	26070	26070	26070	26379	26735	26735	26735	26735	28222	28222	28222	28222
		S/T	0.75	0.86	0.97	1.00	0.58	0.68	0.79	0.88	0.50	0.61	0.70	0.81	0.32	0.42	0.51	0.61
		PI	1.54	1.54	1.54	1.54	1.55	1.55	1.55	1.55	1.55	1.55	1.55	1.55	1.56	1.56	1.56	1.56
	-10	TC	24757	24964	25172	25379	25922	25922	25922	26229	26602	26602	26602	26602	28136	28136	28136	28136
		S/T	0.76	0.86	0.97	1.00	0.58	0.69	0.79	0.89	0.51	0.61	0.71	0.81	0.33	0.42	0.52	0.61
		PI	1.39	1.39	1.39	1.39	1.40	1.40	1.40	1.40	1.40	1.40	1.40	1.40	1.40	1.40	1.40	1.40
	0	TC	24604	24810	25015	25221	25798	25798	25798	26104	26490	26490	26490	26490	28065	28065	28065	28065
		S/T	0.76	0.87	0.98	1.00	0.59	0.69	0.80	0.90	0.51	0.62	0.71	0.82	0.33	0.42	0.52	0.62
		PI	1.32	1.32	1.32	1.32	1.33	1.33	1.33	1.33	1.33	1.33	1.33	1.33	1.33	1.33	1.33	1.33
	5	TC	24532	24737	24942	25148	25751	25751	25751	26057	26450	26450	26450	26450	28046	28046	28046	28046
		S/T	0.76	0.87	0.98	1.00	0.59	0.70	0.80	0.90	0.51	0.62	0.71	0.82	0.33	0.42	0.52	0.62
		PI	1.24	1.24	1.24	1.24	1.25	1.25	1.25	1.25	1.25	1.25	1.25	1.25	1.24	1.24	1.24	1.24
	14	TC	24386	24590	24794	24999	25607	25607	25607	25910	26318	26318	26318	26318	27951	27951	27951	27951
		S/T	0.77	0.87	0.99	1.00	0.59	0.70	0.81	0.90	0.51	0.62	0.72	0.82	0.33	0.43	0.52	0.62
		PI	1.24	1.24	1.24	1.24	1.24	1.24	1.24	1.24	1.24	1.24	1.24	1.24	1.24	1.24	1.24	1.24
	23	TC	24241	24444	24647	24849	25510	25510	25510	25813	26221	26221	26221	26221	27880	27880	27880	27880
		S/T	0.77	0.88	0.99	1.00	0.59	0.70	0.81	0.91	0.52	0.62	0.72	0.83	0.33	0.43	0.53	0.62
		PI	1.24	1.24	1.24	1.24	1.24	1.24	1.24	1.24	1.24	1.24	1.24	1.24	1.24	1.24	1.24	1.24
	32	TC	24120	24322	24523	24725	25414	25414	25414	25715	26149	26149	26149	26149	27856	27856	27856	27856
		S/T	0.77	0.88	1.00	1.00	0.60	0.71	0.81	0.91	0.52	0.63	0.73	0.83	0.33	0.43	0.53	0.63
		PI	1.24	1.24	1.24	1.24	1.25	1.25	1.25	1.25	1.25	1.25	1.25	1.25	1.25	1.25	1.25	1.25
	41	TC	23998	24199	24400	24601	25317	25317	25317	25618	26064	26064	26064	26064	27832	27832	27832	27832
		S/T	0.78	0.89	1.00	1.00	0.60	0.71	0.82	0.92	0.52	0.63	0.73	0.84	0.33	0.43	0.53	0.63
		PI	1.25	1.25	1.25	1.25	1.26	1.26	1.26	1.26	1.26	1.26	1.26	1.26	1.26	1.26	1.26	1.26
	50	TC	23853	24053	24252	24452	25197	25197	25197	25496	25956	25956	25956	25956	27761	27761	27761	27761
		S/T	0.78	0.89	1.00	1.00	0.60	0.71	0.82	0.92	0.52	0.63	0.73	0.84	0.34	0.44	0.53	0.63
		PI	1.27	1.27	1.27	1.27	1.28	1.28	1.28	1.28	1.28	1.28	1.28	1.28	1.27	1.27	1.27	1.27
	59	TC	23659	23857	24055	24253	25028	25028	25028	25325	25799	25799	25799	25799	27643	27643	27643	27643
		S/T	0.79	0.90	1.00	1.00	0.61	0.72	0.83	0.93	0.53	0.64	0.74	0.85	0.34	0.44	0.54	0.64
		PI	1.31	1.31	1.31	1.31	1.31	1.31	1.31	1.31	1.31	1.31	1.31	1.31	1.30	1.30	1.30	1.30
	68	TC	23392	23588	23784	23980	24763	24763	24763	25056	25546	25546	25546	25546	27405	27405	27405	27405
		S/T	0.79	0.90	1.00	1.00	0.61	0.72	0.83	0.93	0.53	0.64	0.74	0.85	0.34	0.44	0.54	0.64
		PI	1.35	1.35	1.35	1.35	1.35	1.35	1.35	1.35	1.35	1.35	1.35	1.35	1.34	1.34	1.34	1.34
	77	TC	22316	22512	22707	22903	23686	23686	23686	23882	24371	24371	24371	24371	26231	26231	26231	26231
		S/T	0.80	0.92	1.00	1.00	0.62	0.73	0.85	0.96	0.53	0.64	0.76	0.87	0.34	0.44	0.54	0.65
		PI	1.50	1.50	1.50	1.50	1.49	1.49	1.49	1.49	1.49	1.49	1.49	1.49	1.50	1.50	1.50	1.50
	86	TC	21239	21435	21631	21826	22609	22609	22609	22805	23295	23295	23295	23490	25056	25056	25056	25056
		S/T	0.82	0.94	1.00	1.00	0.63	0.75	0.87	0.98	0.54	0.65	0.77	0.88	0.34	0.44	0.55	0.66
		PI	1.63	1.63	1.63	1.63	1.63	1.63	1.63	1.63	1.64	1.64	1.64	1.64	1.64	1.64	1.64	1.64
	95	TC	20163	20358	20554	20750	21533	21533	21729	21924	22120	22120	22512	22707	23882	23882	23882	23882
		S/T	0.83	0.96	1.00	1.00	0.64	0.76	0.88	1.00	0.54	0.67	0.78	0.90	0.33	0.45	0.56	0.67
		PI	1.79	1.79	1.79	1.79	1.79	1.79	1.79	1.79	1.80	1.80	1.80	1.80	1.80	1.80	1.80	1.80
	104	TC	18945	19140	19336	19531	20223	20223	20418	20613	20808	20808	21021	21216	22520	22520	22520	22520
		S/T	0.87	1.00	1.00	1.00	0.65	0.79	0.93	1.00	0.55	0.69	0.82	0.95	0.33	0.45	0.58	0.70
		PI	1.97	1.97	1.97	1.97	1.98	1.98	1.98	1.98	1.99	1.99	1.99	1.99	2.00	2.00	2.00	2.00
	115	TC	17562	17757	17952	18147	18732	18732	18928	19123	19318	19318	19318	19513	20976	20976	20976	20976
		S/T	0.89	1.00	1.00	1.00	0.66	0.81	0.95	1.00	0.56	0.70	0.84	0.97	0.33	0.45	0.58	0.71
		PI	2.19	2.19	2.19	2.19	2.20	2.20	2.20	2.20	2.21	2.21	2.21	2.21	2.23	2.23	2.23	2.23
	122	TC	16488	16684	16879	17074	17659	17659	17854	18050	18147	18147	18147	18342	19708	19708	19708	19708
		S/T	0.91	1.00	1.00	1.00	0.68	0.83	0.98	1.00	0.57	0.72	0.87	1.00	0.32	0.46	0.60	0.91
		PI	2.38	2.38	2.38	2.38	2.39	2.39	2.39	2.39	2.40	2.40	2.40	2.40	2.41	2.41	2.41	2.41

Manufacturer reserves the right to change, at any time, specifications and designs without notice and without obligations.

COOLING PERFORMANCE AT INDOOR DRY BULB TEMPERATURE SIZE 24 (Sheet 3 of 3)

AIRFLOW (CFM)	OUTDOOR DB°F	ID WB(°F)	60.8				64.4				66.2				71.6			
		ID DB(°F)	73.4	77.0	80.6	84.2	73.4	77.0	80.6	84.2	73.4	77.0	80.6	84.2	73.4	77.0	80.6	84.2
759	-22	TC	25463	25672	25881	26089	26688	26688	26688	26997	27350	27350	27350	27350	28826	28826	28826	28826
		S/T	0.77	0.88	1.00	1.00	0.59	0.70	0.82	0.96	0.51	0.62	0.72	0.83	0.32	0.42	0.52	0.62
		PI	1.54	1.54	1.54	1.54	1.55	1.55	1.55	1.55	1.55	1.55	1.55	1.55	1.56	1.56	1.56	1.56
	-10	TC	25275	25482	25690	25897	26536	26536	26536	26844	27213	27213	27213	27213	28739	28739	28739	28739
		S/T	0.78	0.89	1.00	1.00	0.59	0.71	0.82	0.97	0.52	0.62	0.73	0.83	0.33	0.42	0.53	0.62
		PI	1.39	1.39	1.39	1.39	1.40	1.40	1.40	1.40	1.40	1.40	1.40	1.40	1.40	1.40	1.40	1.40
	0	TC	25118	25324	25530	25736	26410	26410	26410	26716	27099	27099	27099	27099	28666	28666	28666	28666
		S/T	0.78	0.90	1.00	1.00	0.60	0.71	0.83	0.97	0.52	0.63	0.73	0.84	0.33	0.42	0.53	0.63
		PI	1.35	1.35	1.35	1.35	1.36	1.36	1.36	1.36	1.36	1.36	1.36	1.36	1.36	1.36	1.36	1.36
	5	TC	25045	25250	25456	25661	26362	26362	26362	26667	27058	27058	27058	27058	28647	28647	28647	28647
		S/T	0.78	0.90	1.00	1.00	0.60	0.71	0.83	0.98	0.52	0.63	0.73	0.84	0.33	0.42	0.53	0.63
		PI	1.27	1.27	1.27	1.27	1.27	1.27	1.27	1.27	1.27	1.27	1.27	1.27	1.27	1.27	1.27	1.27
	14	TC	24897	25101	25305	25509	26214	26214	26214	26518	26923	26923	26923	26923	28550	28550	28550	28550
		S/T	0.79	0.90	1.00	1.00	0.60	0.72	0.83	0.98	0.52	0.63	0.74	0.84	0.33	0.43	0.53	0.63
		PI	1.27	1.27	1.27	1.27	1.27	1.27	1.27	1.27	1.27	1.27	1.27	1.27	1.27	1.27	1.27	1.27
	23	TC	24748	24951	25154	25357	26115	26115	26115	26418	26824	26824	26824	26824	28477	28477	28477	28477
		S/T	0.79	0.91	1.00	1.00	0.60	0.72	0.84	0.99	0.53	0.63	0.74	0.85	0.33	0.43	0.54	0.63
		PI	1.26	1.26	1.26	1.26	1.27	1.27	1.27	1.27	1.27	1.27	1.27	1.27	1.27	1.27	1.27	1.27
	32	TC	24624	24826	25028	25230	26016	26016	26016	26318	26750	26750	26750	26750	28453	28453	28453	28453
		S/T	0.79	0.91	1.00	1.00	0.61	0.73	0.84	0.99	0.53	0.64	0.74	0.85	0.33	0.43	0.54	0.64
		PI	1.27	1.27	1.27	1.27	1.27	1.27	1.27	1.27	1.28	1.28	1.28	1.28	1.28	1.28	1.28	1.28
	41	TC	24501	24701	24902	25103	25918	25918	25918	26218	26664	26664	26664	26664	28429	28429	28429	28429
		S/T	0.80	0.92	1.00	1.00	0.61	0.73	0.85	1.00	0.53	0.64	0.75	0.86	0.33	0.43	0.54	0.64
		PI	1.28	1.28	1.28	1.28	1.28	1.28	1.28	1.28	1.29	1.29	1.29	1.29	1.29	1.29	1.29	1.29
	50	TC	24352	24552	24751	24951	25794	25794	25794	26093	26553	26553	26553	26553	28356	28356	28356	28356
		S/T	0.80	0.92	1.00	1.00	0.61	0.73	0.85	1.00	0.53	0.64	0.75	0.86	0.34	0.44	0.54	0.64
		PI	1.30	1.30	1.30	1.30	1.30	1.30	1.30	1.30	1.31	1.31	1.31	1.31	1.30	1.30	1.30	1.30
	59	TC	24154	24352	24550	24748	25622	25622	25622	25918	26392	26392	26392	26392	28235	28235	28235	28235
		S/T	0.81	0.93	1.00	1.00	0.62	0.74	0.86	0.97	0.54	0.65	0.76	0.87	0.34	0.44	0.55	0.65
		PI	1.33	1.33	1.33	1.33	1.33	1.33	1.33	1.33	1.34	1.34	1.34	1.34	1.33	1.33	1.33	1.33
	68	TC	23882	24078	24273	24469	25350	25350	25350	25644	26133	26133	26133	26133	27993	27993	27993	27993
		S/T	0.81	0.93	1.00	1.00	0.62	0.74	0.86	0.97	0.54	0.65	0.76	0.87	0.34	0.44	0.55	0.65
		PI	1.38	1.38	1.38	1.38	1.38	1.38	1.38	1.38	1.38	1.38	1.38	1.38	1.37	1.37	1.37	1.37
	77	TC	22805	23001	23197	23392	24175	24175	24175	24371	24958	24958	24958	25252	26818	26818	26818	26818
		S/T	0.82	0.95	1.00	1.00	0.63	0.75	0.87	0.99	0.54	0.66	0.78	0.89	0.34	0.45	0.56	0.67
		PI	1.53	1.53	1.53	1.53	1.53	1.53	1.53	1.53	1.53	1.53	1.53	1.53	1.53	1.53	1.53	1.53
	86	TC	21729	21924	22120	22316	23099	23099	23295	23490	23784	23784	23784	23980	25644	25644	25644	25644
		S/T	0.84	0.97	1.00	1.00	0.64	0.77	0.89	1.00	0.55	0.67	0.79	0.91	0.33	0.45	0.56	0.68
		PI	1.67	1.67	1.67	1.67	1.67	1.67	1.67	1.67	1.67	1.67	1.67	1.67	1.68	1.68	1.68	1.68
	95	TC	20652	20848	21043	21239	21924	21924	22120	22316	22609	22609	23001	23197	24469	24469	24469	24469
		S/T	0.86	1.00	1.00	1.00	0.65	0.78	0.91	1.00	0.55	0.68	0.81	0.93	0.33	0.45	0.57	0.69
		PI	1.83	1.83	1.83	1.83	1.83	1.83	1.83	1.83	1.84	1.84	1.84	1.84	1.85	1.85	1.85	1.85
	104	TC	19389	19584	19779	19974	20613	20613	20808	21003	21296	21296	21509	21704	23016	23016	23016	23016
		S/T	0.90	1.00	1.00	1.00	0.67	0.82	0.96	1.00	0.56	0.71	0.85	0.99	0.32	0.46	0.59	0.90
		PI	2.02	2.02	2.02	2.02	2.02	2.02	2.02	2.02	2.03	2.03	2.03	2.03	2.04	2.04	2.04	2.04
	115	TC	17952	18147	18342	18537	19123	19123	19318	19513	19806	19806	19806	20001	21367	21367	21367	21367
		S/T	0.92	1.00	1.00	1.00	0.68	0.83	0.98	1.00	0.57	0.72	0.87	1.00	0.32	0.46	0.60	0.92
		PI	2.24	2.24	2.24	2.24	2.25	2.25	2.25	2.25	2.26	2.26	2.26	2.26	2.28	2.28	2.28	2.28
	122	TC	16781	16976	17171	17367	17952	17952	18147	18342	18635	18635	18830	19025	20196	20196	20196	20196
		S/T	0.95	1.00	1.00	1.00	0.70	0.86	1.00	1.00	0.58	0.74	0.89	1.00	0.32	0.46	0.61	0.97
		PI	2.43	2.43	2.43	2.43	2.44	2.44	2.44	2.44	2.45	2.45	2.45	2.45	2.47	2.47	2.47	2.47

LEGEND
TC: Total Cooling Capacity (BTU/hr)
S/T: Sensible Cooling Capacity Ratio
PI: Power Input (kW)
Extrapolated Data - refers to grayed out content

COOLING PERFORMANCE AT INDOOR DRY BULB TEMPERATURE SIZE 30K

COOLING PERFORMANCE AT INDOOR DRY BULB TEMPERATURE SIZE 30K (Sheet 1 of 3)

AIRFLOW (CFM)	OUTDOOR DB°F	ID WB(°F)	60.8				64.4				66.2				71.6			
		ID DB°F	73.4	77.0	80.6	84.2	73.4	77.0	80.6	84.2	73.4	77.0	80.6	84.2	73.4	77.0	80.6	84.2
712	-22	TC	31923	31975	32289	32602	33429	34165	34165	34475	34155	34155	34155	34155	36130	36130	36130	36130
		S/T	0.69	0.78	0.87	0.95	0.56	0.64	0.72	0.81	0.49	0.57	0.66	0.73	0.34	0.42	0.48	0.56
		PI	2.27	2.27	2.27	2.27	2.28	2.28	2.28	2.28	2.28	2.28	2.28	2.28	2.30	2.30	2.30	2.30
	-10	TC	31687	31739	32050	32361	33239	33971	33971	34279	33984	33984	33984	33984	36021	36021	36021	36021
		S/T	0.70	0.79	0.87	0.96	0.56	0.64	0.73	0.81	0.50	0.57	0.66	0.74	0.34	0.42	0.49	0.56
		PI	2.06	2.05	2.05	2.06	2.06	2.06	2.06	2.06	2.06	2.06	2.06	2.06	2.07	2.07	2.07	2.07
	0	TC	31491	31542	31851	32161	33081	33810	33810	34116	33842	33842	33842	33842	35930	35930	35930	35930
		S/T	0.70	0.79	0.88	0.96	0.57	0.65	0.73	0.82	0.50	0.58	0.66	0.74	0.35	0.42	0.49	0.57
		PI	1.92	1.92	1.92	1.92	1.92	1.92	1.92	1.92	1.92	1.92	1.92	1.92	1.92	1.92	1.92	1.92
	5	TC	31398	31450	31758	32067	33021	33748	33748	34054	33791	33791	33791	33791	35906	35906	35906	35906
		S/T	0.70	0.79	0.88	0.97	0.57	0.65	0.73	0.82	0.50	0.58	0.67	0.74	0.35	0.42	0.49	0.57
		PI	1.80	1.80	1.80	1.80	1.80	1.80	1.80	1.80	1.79	1.79	1.79	1.79	1.79	1.79	1.79	1.79
	14	TC	31212	31263	31570	31876	32835	33558	33558	33862	33622	33622	33622	33622	35784	35784	35784	35784
		S/T	0.71	0.80	0.88	0.97	0.57	0.65	0.74	0.82	0.50	0.58	0.67	0.75	0.35	0.43	0.49	0.57
		PI	1.79	1.79	1.79	1.79	1.80	1.80	1.80	1.80	1.79	1.79	1.79	1.79	1.79	1.79	1.79	1.79
	23	TC	31026	31077	31382	31686	32712	33432	33432	33735	33498	33498	33498	33498	35693	35693	35693	35693
		S/T	0.71	0.80	0.89	0.98	0.58	0.66	0.74	0.83	0.51	0.59	0.67	0.75	0.35	0.43	0.50	0.58
		PI	1.79	1.79	1.79	1.79	1.79	1.79	1.79	1.79	1.79	1.79	1.79	1.79	1.79	1.79	1.79	1.79
	32	TC	30871	30922	31225	31528	32588	33306	33306	33607	33406	33406	33406	33406	35663	35663	35663	35663
		S/T	0.72	0.80	0.89	0.98	0.58	0.66	0.74	0.83	0.51	0.59	0.68	0.75	0.35	0.43	0.50	0.58
		PI	1.80	1.80	1.80	1.80	1.80	1.80	1.80	1.80	1.80	1.80	1.80	1.80	1.80	1.80	1.80	1.80
	41	TC	30716	30766	31068	31369	32464	33179	33179	33480	33298	33298	33298	33298	35632	35632	35632	35632
		S/T	0.72	0.81	0.90	0.99	0.58	0.66	0.75	0.84	0.51	0.59	0.68	0.76	0.35	0.43	0.50	0.58
		PI	1.82	1.81	1.81	1.82	1.82	1.82	1.82	1.82	1.81	1.81	1.81	1.81	1.81	1.81	1.81	1.81
	50	TC	30530	30580	30880	31179	32310	33021	33021	33320	33159	33159	33159	33159	35541	35541	35541	35541
		S/T	0.72	0.81	0.90	0.99	0.58	0.67	0.75	0.84	0.51	0.59	0.68	0.76	0.36	0.44	0.50	0.58
		PI	1.85	1.84	1.84	1.85	1.85	1.85	1.85	1.85	1.84	1.84	1.84	1.84	1.84	1.84	1.84	1.84
	59	TC	30282	30331	30628	30926	32093	32800	32800	33097	32959	32959	32959	32959	35389	35389	35389	35389
		S/T	0.73	0.82	0.91	1.00	0.59	0.67	0.76	0.85	0.52	0.60	0.69	0.77	0.36	0.44	0.51	0.59
		PI	1.89	1.89	1.89	1.89	1.89	1.89	1.89	1.89	1.88	1.88	1.88	1.88	1.88	1.88	1.88	1.88
	68	TC	29940	29989	30283	30577	31753	31753	31753	31753	32635	32635	32635	32635	35085	35085	35085	35085
		S/T	0.73	0.82	0.91	1.00	0.59	0.67	0.76	0.85	0.52	0.60	0.69	0.77	0.36	0.44	0.51	0.59
		PI	1.96	1.95	1.95	1.96	1.95	1.95	1.95	1.95	1.94	1.94	1.94	1.94	1.93	1.93	1.93	1.93
	77	TC	28519	28519	28813	29107	30381	30381	30381	30381	31263	31263	31263	31263	33615	33615	33615	33615
		S/T	0.74	0.84	0.93	1.00	0.59	0.68	0.77	0.86	0.52	0.61	0.70	0.78	0.35	0.44	0.52	0.60
		PI	2.16	2.16	2.16	2.16	2.16	2.16	2.16	2.16	2.16	2.16	2.16	2.16	2.16	2.16	2.16	2.16
	86	TC	27245	27245	27539	27833	28911	28911	28911	28911	29793	29793	29793	29793	32145	32145	32145	32145
		S/T	0.75	0.86	0.95	1.00	0.60	0.69	0.79	0.88	0.52	0.61	0.71	0.80	0.35	0.44	0.52	0.61
		PI	2.37	2.37	2.37	2.37	2.37	2.37	2.37	2.37	2.37	2.37	2.37	2.37	2.38	2.38	2.38	2.38
	95	TC	25873	25873	26167	26461	27539	27539	27539	27833	28421	28421	28813	28421	30577	30577	30577	30577
		S/T	0.77	0.87	0.98	1.00	0.60	0.70	0.80	0.90	0.52	0.62	0.72	0.82	0.35	0.44	0.53	0.62
		PI	2.58	2.58	2.58	2.58	2.59	2.59	2.59	2.59	2.60	2.60	2.60	2.60	2.61	2.61	2.61	2.61
	104	TC	24002	24090	24335	24581	25600	25600	25600	25845	26381	26381	26592	26381	28461	28461	28461	28461
		S/T	0.79	0.91	1.00	1.00	0.61	0.72	0.83	0.94	0.53	0.64	0.75	0.85	0.34	0.44	0.54	0.64
		PI	2.85	2.85	2.85	2.85	2.86	2.86	2.86	2.86	2.87	2.87	2.87	2.87	2.89	2.89	2.89	2.89
	115	TC	22211	22404	22597	22790	23756	23756	23756	23949	24432	24432	24432	24432	26460	26460	26460	26460
		S/T	0.81	0.93	1.00	1.00	0.62	0.74	0.85	0.96	0.54	0.65	0.76	0.87	0.34	0.44	0.55	0.65
		PI	3.17	3.17	3.17	3.17	3.18	3.18	3.18	3.18	3.19	3.19	3.19	3.19	3.22	3.22	3.22	3.22
	122	TC	20859	21052	21245	21438	22307	22307	22307	22501	22983	22983	22983	23177	24915	24915	24915	24915
		S/T	0.83	0.95	1.00	1.00	0.63	0.75	0.88	0.99	0.54	0.66	0.78	0.89	0.34	0.45	0.55	0.66
		PI	3.44	3.44	3.44	3.44	3.45	3.45	3.45	3.45	3.46	3.46	3.46	3.46	3.49	3.49	3.49	3.49

Manufacturer reserves the right to change, at any time, specifications and designs without notice and without obligations.

COOLING PERFORMANCE AT INDOOR DRY BULB TEMPERATURE SIZE 30K (Sheet 2 of 3)

AIRFLOW (CFM)	OUTDOOR DB°F	ID WB(°F)	60.8				64.4				66.2				71.6			
		ID DB°F	73.4	77.0	80.6	84.2	73.4	77.0	80.6	84.2	73.4	77.0	80.6	84.2	73.4	77.0	80.6	84.2
806	-22	TC	32615	32615	32929	33242	34165	34165	34165	34475	34887	34887	34887	34887	36953	36953	36953	36953
		S/T	0.72	0.82	0.97	1.00	0.57	0.66	0.75	0.84	0.49	0.59	0.68	0.76	0.33	0.42	0.49	0.58
		PI	2.27	2.27	2.27	2.27	2.28	2.28	2.28	2.28	2.28	2.28	2.28	2.28	2.30	2.30	2.30	2.30
	-10	TC	32374	32374	32685	32997	33971	33971	33971	34279	34712	34712	34712	34712	36841	36841	36841	36841
		S/T	0.73	0.82	0.97	1.00	0.57	0.66	0.76	0.84	0.50	0.59	0.68	0.77	0.34	0.42	0.50	0.58
		PI	2.06	2.05	2.05	2.06	2.06	2.06	2.06	2.06	2.06	2.06	2.06	2.06	2.07	2.07	2.07	2.07
	0	TC	32173	32173	32483	32792	33810	33810	33810	34116	34567	34567	34567	34567	36748	36748	36748	36748
		S/T	0.73	0.83	0.98	1.00	0.58	0.66	0.76	0.85	0.50	0.60	0.68	0.77	0.34	0.42	0.50	0.59
		PI	1.95	1.95	1.95	1.95	1.95	1.95	1.95	1.95	1.96	1.96	1.96	1.96	1.96	1.96	1.96	1.96
	5	TC	32079	32079	32388	32696	33748	33748	33748	34054	34515	34515	34515	34515	36723	36723	36723	36723
		S/T	0.73	0.83	0.98	1.00	0.58	0.67	0.76	0.85	0.50	0.60	0.69	0.77	0.34	0.42	0.50	0.59
		PI	1.84	1.84	1.84	1.84	1.83	1.83	1.83	1.83	1.83	1.83	1.83	1.83	1.83	1.83	1.83	1.83
	14	TC	31889	31889	32196	32502	33558	33558	33558	33862	34342	34342	34342	34342	36598	36598	36598	36598
		S/T	0.74	0.83	0.99	1.00	0.58	0.67	0.77	0.85	0.50	0.60	0.69	0.78	0.34	0.43	0.50	0.59
		PI	1.83	1.83	1.83	1.83	1.82	1.82	1.82	1.82	1.83	1.83	1.83	1.83	1.83	1.83	1.83	1.83
	23	TC	31699	31699	32004	32309	33432	33432	33432	33735	34216	34216	34216	34216	36505	36505	36505	36505
		S/T	0.74	0.84	0.99	1.00	0.59	0.67	0.77	0.86	0.51	0.60	0.69	0.78	0.34	0.43	0.51	0.59
		PI	1.82	1.82	1.82	1.82	1.82	1.82	1.82	1.82	1.83	1.83	1.83	1.83	1.83	1.83	1.83	1.83
	32	TC	31540	31540	31844	32147	33306	33306	33306	33607	34122	34122	34122	34122	36474	36474	36474	36474
		S/T	0.74	0.84	1.00	1.00	0.59	0.68	0.77	0.86	0.51	0.61	0.70	0.78	0.34	0.43	0.51	0.60
		PI	1.83	1.83	1.83	1.83	1.83	1.83	1.83	1.83	1.83	1.83	1.83	1.83	1.84	1.84	1.84	1.84
	41	TC	31382	31382	31684	31985	33179	33179	33179	33480	34011	34011	34011	34011	36443	36443	36443	36443
		S/T	0.75	0.85	1.00	1.00	0.59	0.68	0.78	0.87	0.51	0.61	0.70	0.79	0.34	0.43	0.51	0.60
		PI	1.85	1.85	1.85	1.85	1.85	1.85	1.85	1.85	1.85	1.85	1.85	1.85	1.85	1.85	1.85	1.85
	50	TC	31192	31192	31492	31792	33021	33021	33021	33320	33870	33870	33870	33870	36350	36350	36350	36350
		S/T	0.75	0.85	1.00	1.00	0.59	0.68	0.78	0.87	0.51	0.61	0.70	0.79	0.35	0.44	0.51	0.60
		PI	1.88	1.88	1.88	1.88	1.87	1.87	1.87	1.87	1.88	1.88	1.88	1.88	1.88	1.88	1.88	1.88
	59	TC	30938	30938	31236	31533	32800	32800	32800	33097	33665	33665	33665	33665	36195	36195	36195	36195
		S/T	0.76	0.86	0.96	1.00	0.60	0.69	0.79	0.88	0.52	0.62	0.71	0.80	0.35	0.44	0.52	0.61
		PI	1.93	1.93	1.93	1.93	1.92	1.92	1.92	1.92	1.92	1.92	1.92	1.92	1.92	1.92	1.92	1.92
	68	TC	30590	30590	30884	31178	32452	32452	32452	32746	33335	33335	33335	33335	35884	35884	35884	35884
		S/T	0.76	0.86	0.96	1.00	0.60	0.69	0.79	0.88	0.52	0.62	0.71	0.80	0.35	0.44	0.52	0.61
		PI	1.99	1.99	1.99	1.99	1.98	1.98	1.98	1.98	1.98	1.98	1.98	1.98	1.97	1.97	1.97	1.97
	77	TC	29119	29119	29413	29707	30982	30982	30982	31276	31864	31864	31864	31864	34315	34315	34315	34315
		S/T	0.77	0.88	0.98	1.00	0.60	0.70	0.80	0.90	0.52	0.62	0.72	0.82	0.35	0.44	0.53	0.62
		PI	2.20	2.20	2.20	2.20	2.20	2.20	2.20	2.20	2.20	2.20	2.20	2.20	2.20	2.20	2.20	2.20
	86	TC	27746	28040	28335	28629	29511	29511	29511	29805	30393	30393	30393	30393	32845	32845	32845	32845
		S/T	0.78	0.89	1.00	1.00	0.61	0.71	0.82	0.92	0.53	0.63	0.73	0.84	0.34	0.44	0.53	0.63
		PI	2.41	2.41	2.41	2.41	2.42	2.42	2.42	2.42	2.42	2.42	2.42	2.42	2.43	2.43	2.43	2.43
	95	TC	26374	26668	26962	27256	28138	28138	28138	28433	28923	28923	29413	28923	31276	31276	31276	31276
		S/T	0.80	0.91	1.00	1.00	0.62	0.73	0.84	0.95	0.53	0.64	0.74	0.86	0.34	0.44	0.54	0.64
		PI	2.63	2.63	2.63	2.63	2.64	2.64	2.64	2.64	2.65	2.65	2.65	2.65	2.65	2.65	2.65	2.65
	104	TC	24881	25131	25380	25630	26558	26558	26692	26986	27343	27343	27611	27477	29564	29564	29564	29564
		S/T	0.83	0.95	1.00	1.00	0.63	0.75	0.88	0.99	0.54	0.66	0.78	0.89	0.34	0.45	0.56	0.67
		PI	2.90	2.90	2.90	2.90	2.91	2.91	2.91	2.91	2.92	2.92	2.92	2.92	2.93	2.93	2.93	2.93
	115	TC	23061	23257	23453	23650	24631	24631	24925	25220	25416	25416	25416	25710	27477	27477	27477	27477
		S/T	0.84	0.97	1.00	1.00	0.64	0.77	0.89	1.00	0.55	0.67	0.79	0.91	0.33	0.45	0.56	0.68
		PI	3.22	3.22	3.22	3.22	3.24	3.24	3.24	3.24	3.24	3.24	3.24	3.24	3.27	3.27	3.27	3.27
	122	TC	21589	21785	21981	22178	23061	23061	23257	23453	23846	23846	23846	24042	25907	25907	25907	25907
		S/T	0.87	1.00	1.00	1.00	0.65	0.79	0.92	1.00	0.55	0.68	0.82	0.94	0.33	0.45	0.57	0.91
		PI	3.49	3.49	3.49	3.49	3.51	3.51	3.51	3.51	3.52	3.52	3.52	3.52	3.55	3.55	3.55	3.55

Manufacturer reserves the right to change, at any time, specifications and designs without notice and without obligations.

COOLING PERFORMANCE AT INDOOR DRY BULB TEMPERATURE SIZE 30K (Sheet 3 of 3)

AIRFLOW (CFM)	OUTDOOR DB°F	ID WB(°F)	60.8				64.4				66.2				71.6			
		ID DB°F	73.4	77.0	80.6	84.2	73.4	77.0	80.6	84.2	73.4	77.0	80.6	84.2	73.4	77.0	80.6	84.2
895	-22	TC	33242	33556	33869	34183	34784	34784	34784	35094	35605	35605	35605	35605	37659	37659	37659	37659
		S/T	0.74	0.85	1.00	1.00	0.58	0.68	0.78	0.96	0.50	0.60	0.69	0.79	0.32	0.42	0.50	0.60
		PI	2.27	2.27	2.27	2.27	2.28	2.28	2.28	2.28	2.28	2.28	2.28	2.28	2.30	2.30	2.30	2.30
	-10	TC	32997	33308	33619	33931	34587	34587	34587	34895	35427	35427	35427	35427	37545	37545	37545	37545
		S/T	0.75	0.85	1.00	1.00	0.58	0.68	0.79	0.97	0.51	0.60	0.70	0.79	0.33	0.42	0.51	0.60
		PI	2.06	2.05	2.05	2.06	2.06	2.06	2.06	2.06	2.06	2.06	2.06	2.06	2.07	2.07	2.07	2.07
	0	TC	32792	33101	33411	33720	34423	34423	34423	34729	35279	35279	35279	35279	37450	37450	37450	37450
		S/T	0.75	0.86	1.00	1.00	0.59	0.68	0.79	0.97	0.51	0.61	0.70	0.80	0.33	0.42	0.51	0.61
		PI	1.99	1.99	1.99	1.99	1.99	1.99	1.99	1.99	1.99	1.99	1.99	1.99	2.00	2.00	2.00	2.00
	5	TC	32696	33005	33313	33622	34360	34360	34360	34666	35226	35226	35226	35226	37425	37425	37425	37425
		S/T	0.75	0.86	1.00	1.00	0.59	0.69	0.79	0.98	0.51	0.61	0.70	0.80	0.33	0.42	0.51	0.61
		PI	1.87	1.87	1.87	1.87	1.87	1.87	1.87	1.87	1.87	1.87	1.87	1.87	1.86	1.86	1.86	1.86
	14	TC	32502	32809	33116	33422	34167	34167	34167	34471	35049	35049	35049	35049	37298	37298	37298	37298
		S/T	0.76	0.86	1.00	1.00	0.59	0.69	0.80	0.98	0.51	0.61	0.71	0.81	0.33	0.43	0.51	0.61
		PI	1.86	1.86	1.86	1.86	1.86	1.86	1.86	1.86	1.86	1.86	1.86	1.86	1.87	1.87	1.87	1.87
	23	TC	32309	32613	32918	33223	34038	34038	34038	34341	34921	34921	34921	34921	37203	37203	37203	37203
		S/T	0.76	0.87	1.00	1.00	0.59	0.69	0.80	0.99	0.52	0.61	0.71	0.81	0.33	0.43	0.52	0.61
		PI	1.86	1.86	1.86	1.86	1.86	1.86	1.86	1.86	1.86	1.86	1.86	1.86	1.87	1.87	1.87	1.87
	32	TC	32147	32450	32754	33057	33909	33909	33909	34211	34824	34824	34824	34824	37172	37172	37172	37172
		S/T	0.76	0.87	1.00	1.00	0.60	0.70	0.80	0.99	0.52	0.62	0.72	0.81	0.33	0.43	0.52	0.62
		PI	1.87	1.87	1.87	1.87	1.87	1.87	1.87	1.87	1.87	1.87	1.87	1.87	1.88	1.88	1.88	1.88
	41	TC	31985	32287	32589	32891	33781	33781	33781	34081	34712	34712	34712	34712	37140	37140	37140	37140
		S/T	0.77	0.88	1.00	1.00	0.60	0.70	0.81	1.00	0.52	0.62	0.72	0.82	0.33	0.43	0.52	0.62
		PI	1.89	1.89	1.89	1.89	1.88	1.88	1.88	1.88	1.89	1.89	1.89	1.89	1.89	1.89	1.89	1.89
	50	TC	31792	32092	32391	32691	33620	33620	33620	33919	34567	34567	34567	34567	37045	37045	37045	37045
		S/T	0.77	0.88	1.00	1.00	0.60	0.70	0.81	1.00	0.52	0.62	0.72	0.82	0.34	0.44	0.52	0.62
		PI	1.92	1.92	1.92	1.92	1.91	1.91	1.91	1.91	1.91	1.91	1.91	1.91	1.91	1.91	1.91	1.91
	59	TC	31533	31831	32128	32426	33394	33394	33394	33692	34358	34358	34358	34358	36887	36887	36887	36887
		S/T	0.78	0.89	0.99	1.00	0.61	0.71	0.82	0.92	0.53	0.63	0.73	0.83	0.34	0.44	0.53	0.63
		PI	1.96	1.96	1.96	1.96	1.96	1.96	1.96	1.96	1.96	1.96	1.96	1.96	1.95	1.95	1.95	1.95
	68	TC	31178	31472	31766	32060	33041	33041	33041	33335	34021	34021	34021	34021	36570	36570	36570	36570
		S/T	0.78	0.89	0.99	1.00	0.61	0.71	0.82	0.92	0.53	0.63	0.73	0.83	0.34	0.44	0.53	0.63
		PI	2.03	2.03	2.03	2.03	2.02	2.02	2.02	2.02	2.02	2.02	2.02	2.02	2.01	2.01	2.01	2.01
	77	TC	29707	30001	30295	30590	31570	31570	31570	31864	32550	32550	32550	32550	35001	35001	35001	35001
		S/T	0.79	0.91	1.00	1.00	0.61	0.72	0.83	0.94	0.53	0.64	0.75	0.85	0.34	0.44	0.54	0.64
		PI	2.24	2.24	2.24	2.24	2.24	2.24	2.24	2.24	2.24	2.24	2.24	2.24	2.24	2.24	2.24	2.24
	86	TC	28335	28629	28923	29217	30099	30099	30099	30393	31080	31080	31080	31080	33433	33433	33433	33433
		S/T	0.81	0.92	1.00	1.00	0.62	0.74	0.85	0.96	0.54	0.65	0.76	0.87	0.34	0.44	0.55	0.65
		PI	2.45	2.45	2.45	2.45	2.45	2.45	2.45	2.45	2.46	2.46	2.46	2.46	2.47	2.47	2.47	2.47
	95	TC	26962	27256	27550	27844	28629	28629	28629	28923	29511	29511	30001	30295	31864	31864	31864	31864
		S/T	0.82	0.95	1.00	1.00	0.63	0.75	0.87	0.99	0.54	0.66	0.77	0.88	0.34	0.44	0.55	0.66
		PI	2.68	2.68	2.68	2.68	2.69	2.69	2.69	2.69	2.70	2.70	2.70	2.70	2.71	2.71	2.71	2.71
	104	TC	25380	25630	25880	26130	27049	27049	27182	27477	27887	27887	28155	28449	30153	30153	30153	30153
		S/T	0.86	0.99	1.00	1.00	0.65	0.78	0.91	1.00	0.55	0.68	0.81	0.93	0.33	0.45	0.57	0.90
		PI	2.95	2.95	2.95	2.95	2.96	2.96	2.96	2.96	2.97	2.97	2.97	2.97	2.99	2.99	2.99	2.99
	115	TC	23453	23650	23846	24042	25122	25122	25416	25710	25907	25907	25907	26201	28066	28066	28066	28066
		S/T	0.87	1.00	1.00	1.00	0.66	0.79	0.93	1.00	0.56	0.69	0.83	0.95	0.33	0.45	0.58	0.92
		PI	3.28	3.28	3.28	3.28	3.30	3.30	3.30	3.30	3.31	3.31	3.31	3.31	3.33	3.33	3.33	3.33
	122	TC	22080	22276	22472	22668	23552	23552	23748	23944	24337	24337	24337	24533	26397	26397	26397	26397
		S/T	0.90	1.00	1.00	1.00	0.67	0.82	0.96	1.00	0.56	0.71	0.85	0.99	0.32	0.46	0.59	0.97
		PI	3.55	3.55	3.55	3.55	3.57	3.57	3.57	3.57	3.57	3.57	3.57	3.57	3.60	3.60	3.60	3.60

LEGEND
TC: Total Cooling Capacity (BTU/hr)
S/T: Sensible Cooling Capacity Ratio
PI: Power Input (kW)
Extrapolated Data - refers to grayed out content

COOLING PERFORMANCE AT INDOOR DRY BULB TEMPERATURE SIZE 36K

COOLING PERFORMANCE AT INDOOR DRY BULB TEMPERATURE SIZE 36K (Sheet 1 of 3)

AIRFLOW (CFM)	OUTDOOR DB°F	ID WB(°F)	60.8				64.4				66.2				71.6			
		ID DB°F	73.4	77.0	80.6	84.2	73.4	77.0	80.6	84.2	73.4	77.0	80.6	84.2	73.4	77.0	80.6	84.2
865	-22	TC	38350	38371	38789	39207	40158	41000	41000	41413	41050	41050	41050	41050	43421	43421	43421	43421
		S/T	0.70	0.79	0.87	0.95	0.56	0.64	0.72	0.81	0.49	0.57	0.66	0.73	0.34	0.42	0.49	0.57
		PI	3.52	3.52	3.52	3.52	3.52	3.52	3.52	3.52	3.53	3.53	3.53	3.53	3.55	3.55	3.55	3.55
	-10	TC	38067	38087	38503	38918	39931	40767	40767	41178	40845	40845	40845	40845	43290	43290	43290	43290
		S/T	0.71	0.79	0.88	0.96	0.56	0.65	0.73	0.81	0.50	0.57	0.66	0.74	0.34	0.42	0.50	0.57
		PI	3.18	3.19	3.19	3.18	3.18	3.18	3.18	3.18	3.19	3.19	3.19	3.19	3.20	3.20	3.20	3.20
	0	TC	37831	37851	38264	38676	39741	40573	40573	40982	40674	40674	40674	40674	43181	43181	43181	43181
		S/T	0.71	0.80	0.89	0.96	0.57	0.65	0.73	0.82	0.50	0.58	0.66	0.74	0.35	0.42	0.50	0.58
		PI	2.97	2.97	2.97	2.97	2.96	2.96	2.96	2.96	2.97	2.97	2.97	2.97	2.97	2.97	2.97	2.97
	5	TC	37720	37741	38152	38563	39668	40499	40499	40907	40613	40613	40613	40613	43151	43151	43151	43151
		S/T	0.71	0.80	0.89	0.97	0.57	0.65	0.73	0.82	0.50	0.58	0.67	0.74	0.35	0.42	0.50	0.58
		PI	2.79	2.79	2.79	2.79	2.78	2.78	2.78	2.78	2.78	2.78	2.78	2.78	2.77	2.77	2.77	2.77
	14	TC	37496	37517	37926	38335	39445	40272	40272	40677	40409	40409	40409	40409	43005	43005	43005	43005
		S/T	0.72	0.81	0.89	0.97	0.57	0.66	0.74	0.82	0.50	0.58	0.67	0.75	0.35	0.43	0.50	0.58
		PI	2.78	2.78	2.78	2.78	2.77	2.77	2.77	2.77	2.78	2.78	2.78	2.78	2.77	2.77	2.77	2.77
	23	TC	37273	37293	37700	38106	39297	40120	40120	40524	40261	40261	40261	40261	42896	42896	42896	42896
		S/T	0.72	0.81	0.90	0.98	0.58	0.66	0.74	0.83	0.51	0.59	0.67	0.75	0.35	0.43	0.51	0.59
		PI	2.77	2.78	2.78	2.77	2.77	2.77	2.77	2.77	2.78	2.78	2.78	2.78	2.78	2.78	2.78	2.78
	32	TC	37086	37107	37511	37916	39148	39968	39968	40371	40150	40150	40150	40150	42859	42859	42859	42859
		S/T	0.73	0.81	0.90	0.98	0.58	0.66	0.74	0.83	0.51	0.59	0.68	0.75	0.35	0.43	0.51	0.59
		PI	2.78	2.79	2.79	2.78	2.78	2.78	2.78	2.78	2.79	2.79	2.79	2.79	2.79	2.79	2.79	2.79
	41	TC	36900	36920	37323	37725	38999	39817	39817	40218	40020	40020	40020	40020	42823	42823	42823	42823
		S/T	0.73	0.82	0.91	0.99	0.58	0.66	0.75	0.84	0.51	0.59	0.68	0.76	0.35	0.43	0.51	0.59
		PI	2.81	2.81	2.81	2.81	2.80	2.80	2.80	2.80	2.81	2.81	2.81	2.81	2.81	2.81	2.81	2.81
	50	TC	36676	36696	37096	37496	38814	39627	39627	40026	39854	39854	39854	39854	42713	42713	42713	42713
		S/T	0.73	0.82	0.91	0.99	0.58	0.67	0.75	0.84	0.51	0.59	0.68	0.76	0.36	0.44	0.51	0.59
		PI	2.86	2.86	2.86	2.86	2.85	2.85	2.85	2.85	2.85	2.85	2.85	2.85	2.84	2.84	2.84	2.84
	59	TC	36378	36398	36795	37192	38554	39362	39362	39758	39613	39613	39613	39613	42531	42531	42531	42531
		S/T	0.74	0.83	0.92	1.00	0.59	0.67	0.76	0.85	0.52	0.60	0.69	0.77	0.36	0.44	0.52	0.60
		PI	2.92	2.93	2.93	2.92	2.91	2.91	2.91	2.91	2.92	2.92	2.92	2.92	2.90	2.90	2.90	2.90
	68	TC	35968	35988	36380	36772	38145	38145	38145	38145	39224	39224	39224	39224	42166	42166	42166	42166
		S/T	0.74	0.83	0.92	1.00	0.59	0.68	0.76	0.85	0.52	0.60	0.69	0.77	0.36	0.44	0.52	0.60
		PI	3.03	3.03	3.03	3.03	3.01	3.01	3.01	3.01	3.01	3.01	3.01	3.01	2.99	2.99	2.99	2.99
	77	TC	34321	34321	34713	35105	36478	36478	36478	36478	37557	37557	37557	37557	40401	40401	40401	40401
		S/T	0.75	0.84	0.94	1.00	0.59	0.68	0.78	0.87	0.52	0.61	0.70	0.79	0.35	0.44	0.52	0.60
		PI	3.33	3.33	3.33	3.33	3.33	3.33	3.33	3.33	3.33	3.33	3.33	3.33	3.33	3.33	3.33	3.33
	86	TC	32654	32654	32948	33242	34811	34811	34811	35203	35792	35792	35792	35792	38635	38635	38635	38635
		S/T	0.76	0.86	0.96	1.00	0.60	0.69	0.79	0.88	0.52	0.62	0.71	0.80	0.35	0.44	0.52	0.61
		PI	3.65	3.65	3.65	3.65	3.66	3.66	3.66	3.66	3.67	3.67	3.67	3.67	3.68	3.68	3.68	3.68
	95	TC	31085	31085	31379	31673	33046	33046	33046	33340	34125	34125	34615	34125	36772	36772	36772	36772
		S/T	0.77	0.88	0.98	1.00	0.60	0.70	0.81	0.90	0.53	0.62	0.72	0.82	0.35	0.44	0.53	0.62
		PI	3.99	3.99	3.99	3.99	4.01	4.01	4.01	4.01	4.01	4.01	4.02	4.01	4.04	4.04	4.04	4.04
	104	TC	28980	29112	29403	29695	30878	30878	30878	31169	31858	31858	32123	31858	34392	34392	34392	34392
		S/T	0.80	0.91	1.00	1.00	0.62	0.73	0.84	0.95	0.53	0.64	0.75	0.86	0.34	0.44	0.54	0.64
		PI	4.41	4.41	4.41	4.41	4.42	4.42	4.42	4.42	4.43	4.43	4.43	4.43	4.46	4.46	4.46	4.46
	115	TC	26808	27099	27390	27682	28653	28653	28653	28944	29527	29527	29527	29527	31955	31955	31955	31955
		S/T	0.81	0.93	1.00	1.00	0.62	0.74	0.86	0.97	0.54	0.65	0.76	0.88	0.34	0.44	0.55	0.65
		PI	4.90	4.90	4.90	4.90	4.92	4.92	4.92	4.92	4.93	4.93	4.93	4.93	4.97	4.97	4.97	4.97
	122	TC	25156	25448	25739	26030	26905	26905	26905	27196	27779	27779	27779	28070	30110	30110	30110	30110
		S/T	0.83	0.96	1.00	1.00	0.63	0.76	0.88	1.00	0.54	0.66	0.78	0.90	0.33	0.45	0.56	0.67
		PI	5.30	5.30	5.30	5.30	5.32	5.32	5.32	5.32	5.34	5.34	5.34	5.34	5.38	5.38	5.38	5.38

Manufacturer reserves the right to change, at any time, specifications and designs without notice and without obligations.

COOLING PERFORMANCE AT INDOOR DRY BULB TEMPERATURE SIZE 36K (Sheet 2 of 3)

AIRFLOW (CFM)	OUTDOOR DB°F	ID WB(°F)	60.8				64.4				66.2				71.6			
		ID DB°F	73.4	77.0	80.6	84.2	73.4	77.0	80.6	84.2	73.4	77.0	80.6	84.2	73.4	77.0	80.6	84.2
971	-22	TC	39118	39118	39536	39954	41000	41000	41000	41413	41887	41887	41887	41887	44347	44347	44347	44347
		S/T	0.72	0.82	0.97	1.00	0.57	0.66	0.75	0.84	0.49	0.59	0.68	0.77	0.33	0.42	0.50	0.58
		PI	3.52	3.52	3.52	3.52	3.52	3.52	3.52	3.52	3.53	3.53	3.53	3.53	3.55	3.55	3.55	3.55
	-10	TC	38829	38829	39244	39659	40767	40767	40767	41178	41678	41678	41678	41678	44213	44213	44213	44213
		S/T	0.73	0.82	0.97	1.00	0.57	0.66	0.76	0.84	0.50	0.59	0.68	0.78	0.34	0.42	0.51	0.58
		PI	3.18	3.19	3.19	3.18	3.18	3.18	3.18	3.18	3.19	3.19	3.19	3.19	3.20	3.20	3.20	3.20
	0	TC	38588	38588	39001	39413	40573	40573	40573	40982	41503	41503	41503	41503	44101	44101	44101	44101
		S/T	0.73	0.83	0.98	1.00	0.58	0.66	0.76	0.85	0.50	0.60	0.68	0.78	0.34	0.42	0.51	0.59
		PI	3.03	3.03	3.03	3.03	3.02	3.02	3.02	3.02	3.03	3.03	3.03	3.03	3.04	3.04	3.04	3.04
	5	TC	38475	38475	38887	39298	40499	40499	40499	40907	41441	41441	41441	41441	44071	44071	44071	44071
		S/T	0.73	0.83	0.98	1.00	0.58	0.67	0.76	0.85	0.50	0.60	0.69	0.78	0.34	0.42	0.51	0.59
		PI	2.85	2.85	2.85	2.85	2.83	2.83	2.83	2.83	2.84	2.84	2.84	2.84	2.83	2.83	2.83	2.83
	14	TC	38247	38247	38656	39065	40272	40272	40272	40677	41233	41233	41233	41233	43922	43922	43922	43922
		S/T	0.74	0.83	0.99	1.00	0.58	0.67	0.77	0.85	0.50	0.60	0.69	0.79	0.34	0.43	0.51	0.59
		PI	2.83	2.83	2.83	2.83	2.83	2.83	2.83	2.83	2.83	2.83	2.83	2.83	2.83	2.83	2.83	2.83
	23	TC	38019	38019	38425	38832	40120	40120	40120	40524	41082	41082	41082	41082	43810	43810	43810	43810
		S/T	0.74	0.84	0.99	1.00	0.59	0.67	0.77	0.86	0.51	0.60	0.69	0.79	0.34	0.43	0.52	0.59
		PI	2.83	2.83	2.83	2.83	2.82	2.82	2.82	2.82	2.83	2.83	2.83	2.83	2.83	2.83	2.83	2.83
	32	TC	37829	37829	38233	38638	39968	39968	39968	40371	40968	40968	40968	40968	43773	43773	43773	43773
		S/T	0.74	0.84	1.00	1.00	0.59	0.68	0.77	0.86	0.51	0.61	0.70	0.79	0.34	0.43	0.52	0.60
		PI	2.84	2.84	2.84	2.84	2.83	2.83	2.83	2.83	2.84	2.84	2.84	2.84	2.84	2.84	2.84	2.84
	41	TC	37639	37639	38041	38444	39817	39817	39817	40218	40836	40836	40836	40836	43736	43736	43736	43736
		S/T	0.75	0.85	1.00	1.00	0.59	0.68	0.78	0.87	0.51	0.61	0.70	0.80	0.34	0.43	0.52	0.60
		PI	2.87	2.87	2.87	2.87	2.86	2.86	2.86	2.86	2.86	2.86	2.86	2.86	2.86	2.86	2.86	2.86
	50	TC	37411	37411	37811	38211	39627	39627	39627	40026	40666	40666	40666	40666	43624	43624	43624	43624
		S/T	0.75	0.85	1.00	1.00	0.59	0.68	0.78	0.87	0.51	0.61	0.70	0.80	0.35	0.44	0.52	0.60
		PI	2.92	2.92	2.92	2.92	2.90	2.90	2.90	2.90	2.91	2.91	2.91	2.91	2.90	2.90	2.90	2.90
	59	TC	37106	37106	37503	37900	39362	39362	39362	39758	40420	40420	40420	40420	43437	43437	43437	43437
		S/T	0.76	0.86	0.96	1.00	0.60	0.69	0.79	0.88	0.52	0.62	0.71	0.81	0.35	0.44	0.53	0.61
		PI	2.99	2.99	2.99	2.99	2.97	2.97	2.97	2.97	2.97	2.97	2.97	2.97	2.96	2.96	2.96	2.96
	68	TC	36688	36688	37081	37473	38944	38944	38944	39337	40023	40023	40023	40023	43064	43064	43064	43064
		S/T	0.76	0.86	0.96	1.00	0.60	0.69	0.79	0.88	0.52	0.62	0.71	0.81	0.35	0.44	0.53	0.61
		PI	3.09	3.09	3.09	3.09	3.07	3.07	3.07	3.07	3.07	3.07	3.07	3.07	3.05	3.05	3.05	3.05
	77	TC	35021	35021	35413	35805	37179	37179	37179	37571	38258	38258	38258	38258	41201	41201	41201	41201
		S/T	0.77	0.88	0.98	1.00	0.60	0.70	0.81	0.90	0.53	0.62	0.72	0.82	0.35	0.44	0.53	0.62
		PI	3.40	3.40	3.40	3.40	3.40	3.40	3.40	3.40	3.40	3.40	3.40	3.40	3.40	3.40	3.40	3.40
	86	TC	33353	33647	33941	34236	35511	35511	35511	35903	36590	36590	36590	36590	39337	39337	39337	39337
		S/T	0.78	0.89	1.00	1.00	0.61	0.72	0.82	0.92	0.53	0.63	0.73	0.84	0.34	0.44	0.54	0.63
		PI	3.73	3.73	3.73	3.73	3.73	3.73	3.73	3.73	3.74	3.74	3.74	3.74	3.75	3.75	3.75	3.75
	95	TC	31685	31980	32274	32568	33745	33745	33745	34040	34726	34726	35315	34726	37473	37473	37473	37473
		S/T	0.80	0.91	1.00	1.00	0.62	0.73	0.84	0.95	0.53	0.64	0.75	0.86	0.34	0.44	0.54	0.64
		PI	4.07	4.07	4.07	4.07	4.09	4.09	4.09	4.09	4.09	4.09	4.10	4.09	4.09	4.09	4.09	4.09
	104	TC	29865	30160	30454	30748	31837	31837	31970	32265	32773	32773	33094	32907	35431	35431	35431	35431
		S/T	0.83	0.95	1.00	1.00	0.63	0.76	0.88	1.00	0.54	0.66	0.78	0.90	0.34	0.45	0.56	0.67
		PI	4.49	4.49	4.49	4.49	4.51	4.51	4.51	4.51	4.52	4.52	4.52	4.52	4.54	4.54	4.54	4.54
	115	TC	27671	27965	28259	28554	29535	29535	29829	30124	30418	30418	30418	30713	32969	32969	32969	32969
		S/T	0.84	0.97	1.00	1.00	0.64	0.77	0.89	1.00	0.55	0.67	0.80	0.92	0.33	0.45	0.56	0.68
		PI	4.99	4.99	4.99	4.99	5.02	5.02	5.02	5.02	5.03	5.03	5.03	5.03	5.07	5.07	5.07	5.07
	122	TC	25905	26199	26493	26788	27769	27769	28063	28358	28652	28652	28652	28946	31105	31105	31105	31105
		S/T	0.87	1.00	1.00	1.00	0.65	0.79	0.92	1.00	0.55	0.69	0.82	0.94	0.33	0.45	0.57	0.91
		PI	5.41	5.41	5.41	5.41	5.43	5.43	5.43	5.43	5.44	5.44	5.44	5.44	5.49	5.49	5.49	5.49

Manufacturer reserves the right to change, at any time, specifications and designs without notice and without obligations.

COOLING PERFORMANCE AT INDOOR DRY BULB TEMPERATURE SIZE 36K (Sheet 3 of 3)

AIRFLOW (CFM)	OUTDOOR DB°F	ID WB(°F)	60.8				64.4				66.2				71.6			
		ID DB°F	73.4	77.0	80.6	84.2	73.4	77.0	80.6	84.2	73.4	77.0	80.6	84.2	73.4	77.0	80.6	84.2
1083	-22	TC	39850	40268	40686	41105	41723	41723	41723	42136	42708	42708	42708	42708	45155	45155	45155	45155
		S/T	0.74	0.85	1.00	1.00	0.58	0.68	0.78	0.96	0.50	0.60	0.69	0.80	0.32	0.42	0.51	0.60
		PI	3.52	3.52	3.52	3.52	3.52	3.52	3.52	3.52	3.53	3.53	3.53	3.53	3.55	3.55	3.55	3.55
	-10	TC	39555	39971	40386	40801	41486	41486	41486	41897	42495	42495	42495	42495	45019	45019	45019	45019
		S/T	0.75	0.85	1.00	1.00	0.58	0.68	0.79	0.97	0.51	0.60	0.70	0.80	0.33	0.42	0.52	0.60
		PI	3.18	3.19	3.19	3.18	3.18	3.18	3.18	3.18	3.19	3.19	3.19	3.19	3.20	3.20	3.20	3.20
	0	TC	39310	39723	40135	40548	41289	41289	41289	41697	42317	42317	42317	42317	44905	44905	44905	44905
		S/T	0.75	0.86	1.00	1.00	0.59	0.68	0.79	0.97	0.51	0.61	0.70	0.81	0.33	0.42	0.52	0.61
		PI	3.09	3.09	3.09	3.09	3.08	3.08	3.08	3.08	3.09	3.09	3.09	3.09	3.09	3.09	3.09	3.09
	5	TC	39195	39607	40018	40430	41213	41213	41213	41621	42253	42253	42253	42253	44874	44874	44874	44874
		S/T	0.75	0.86	1.00	1.00	0.59	0.69	0.79	0.98	0.51	0.61	0.70	0.81	0.33	0.42	0.52	0.61
		PI	2.90	2.90	2.90	2.90	2.89	2.89	2.89	2.89	2.89	2.89	2.89	2.89	2.88	2.88	2.88	2.88
	14	TC	38963	39372	39781	40190	40982	40982	40982	41387	42041	42041	42041	42041	44722	44722	44722	44722
		S/T	0.76	0.86	1.00	1.00	0.59	0.69	0.80	0.98	0.51	0.61	0.71	0.82	0.33	0.43	0.52	0.61
		PI	2.89	2.89	2.89	2.89	2.88	2.88	2.88	2.88	2.88	2.88	2.88	2.88	2.88	2.88	2.88	2.88
	23	TC	38730	39137	39544	39950	40827	40827	40827	41232	41887	41887	41887	41887	44609	44609	44609	44609
		S/T	0.76	0.87	1.00	1.00	0.59	0.69	0.80	0.99	0.52	0.61	0.71	0.82	0.33	0.43	0.53	0.61
		PI	2.88	2.88	2.88	2.88	2.88	2.88	2.88	2.88	2.88	2.88	2.88	2.88	2.89	2.89	2.89	2.89
	32	TC	38537	38941	39346	39751	40673	40673	40673	41076	41772	41772	41772	41772	44571	44571	44571	44571
		S/T	0.76	0.87	1.00	1.00	0.60	0.70	0.80	0.99	0.52	0.62	0.72	0.82	0.33	0.43	0.53	0.62
		PI	2.90	2.90	2.90	2.90	2.89	2.89	2.89	2.89	2.90	2.90	2.90	2.90	2.90	2.90	2.90	2.90
	41	TC	38343	38746	39148	39551	40519	40519	40519	40920	41637	41637	41637	41637	44533	44533	44533	44533
		S/T	0.77	0.88	1.00	1.00	0.60	0.70	0.81	1.00	0.52	0.62	0.72	0.83	0.33	0.43	0.53	0.62
		PI	2.92	2.92	2.92	2.92	2.91	2.91	2.91	2.91	2.92	2.92	2.92	2.92	2.92	2.92	2.92	2.92
	50	TC	38111	38511	38911	39311	40326	40326	40326	40725	41463	41463	41463	41463	44419	44419	44419	44419
		S/T	0.77	0.88	1.00	1.00	0.60	0.70	0.81	1.00	0.52	0.62	0.72	0.83	0.34	0.44	0.53	0.62
		PI	2.97	2.97	2.97	2.97	2.96	2.96	2.96	2.96	2.96	2.96	2.96	2.96	2.96	2.96	2.96	2.96
	59	TC	37801	38198	38595	38991	40056	40056	40056	40452	41213	41213	41213	41213	44229	44229	44229	44229
		S/T	0.78	0.89	1.00	1.00	0.61	0.71	0.82	0.92	0.53	0.63	0.73	0.84	0.34	0.44	0.54	0.63
		PI	3.04	3.04	3.04	3.04	3.03	3.03	3.03	3.03	3.03	3.03	3.03	3.03	3.02	3.02	3.02	3.02
	68	TC	37375	37767	38160	38552	39631	39631	39631	40023	40808	40808	40808	40808	43849	43849	43849	43849
		S/T	0.78	0.89	1.00	1.00	0.61	0.71	0.82	0.92	0.53	0.63	0.73	0.84	0.34	0.44	0.54	0.63
		PI	3.15	3.15	3.15	3.15	3.13	3.13	3.13	3.13	3.13	3.13	3.13	3.13	3.11	3.11	3.11	3.11
	77	TC	35707	36100	36492	36884	37865	37865	37865	38258	39042	39042	39042	39042	41985	41985	41985	41985
		S/T	0.79	0.91	1.00	1.00	0.62	0.73	0.84	0.94	0.53	0.64	0.75	0.86	0.34	0.44	0.54	0.64
		PI	3.46	3.46	3.46	3.46	3.46	3.46	3.46	3.46	3.46	3.46	3.46	3.46	3.46	3.46	3.46	3.46
	86	TC	34040	34334	34726	35119	36198	36198	36198	36590	37277	37277	37277	37277	40122	40122	40122	40122
		S/T	0.81	0.93	1.00	1.00	0.62	0.74	0.86	0.97	0.54	0.65	0.76	0.88	0.34	0.44	0.55	0.65
		PI	3.80	3.80	3.80	3.80	3.81	3.81	3.81	3.81	3.81	3.81	3.81	3.81	3.83	3.83	3.83	3.83
	95	TC	32274	32568	32862	33157	34334	34334	34334	34726	35413	35413	36001	36394	38258	38258	38258	38258
		S/T	0.83	0.95	1.00	1.00	0.63	0.75	0.88	0.99	0.54	0.66	0.77	0.89	0.34	0.45	0.56	0.67
		PI	4.15	4.15	4.15	4.15	4.17	4.17	4.17	4.17	4.17	4.17	4.18	4.17	4.20	4.20	4.20	4.20
	104	TC	30409	30704	30998	31292	32381	32381	32514	32862	33415	33415	33737	34084	36172	36172	36172	36172
		S/T	0.86	1.00	1.00	1.00	0.65	0.78	0.91	1.00	0.55	0.68	0.81	0.94	0.33	0.45	0.57	0.90
		PI	4.58	4.58	4.58	4.58	4.60	4.60	4.60	4.60	4.61	4.61	4.61	4.61	4.64	4.64	4.64	4.64
	115	TC	28161	28456	28750	29044	30026	30026	30320	30614	31007	31007	31007	31301	33656	33656	33656	33656
		S/T	0.88	1.00	1.00	1.00	0.66	0.80	0.93	1.00	0.56	0.69	0.83	0.96	0.33	0.45	0.58	0.92
		PI	5.09	5.09	5.09	5.09	5.12	5.12	5.12	5.12	5.13	5.13	5.13	5.13	5.17	5.17	5.17	5.17
	122	TC	26395	26690	26984	27278	28259	28259	28554	28848	29241	29241	29241	29535	31694	31694	31694	31694
		S/T	0.91	1.00	1.00	1.00	0.67	0.82	0.97	1.00	0.57	0.71	0.85	0.99	0.32	0.46	0.59	0.97
		PI	5.51	5.51	5.51	5.51	5.54	5.54	5.54	5.54	5.55	5.55	5.55	5.55	5.60	5.60	5.60	5.60

LEGEND
TC: Total Cooling Capacity (BTU/hr)
S/T: Sensible Cooling Capacity Ratio
PI: Power Input (kW)
Extrapolated Data - refers to grayed out content

HEATING PERFORMANCE - AHU

HEATING PERFORMANCE AT INDOOR DRY BULB TEMPERATURE SIZE 18K

AIRFLOW (CFM)	OUTDOOR DB (°F)	TC:TOTAL CAPACITY IN KILOWATTS				PI:TOTAL POWER IN KILOWATTS			
		Indoor Conditions (DB °F)				Indoor Conditions (DB °F)			
		60.8	68.0	71.6	75.2	60.8	68.0	71.6	75.2
489	-22.0	12251	12117	12050	11983	1.54	1.60	1.55	1.55
	-10.0	14096	13942	13865	13788	1.80	1.87	1.81	1.81
	0.0	15634	15463	15377	15292	2.02	2.10	2.03	2.03
	5.0	16456	16276	16186	16096	2.15	2.22	2.15	2.15
	14.0	17572	17380	17284	17188	2.29	2.37	2.30	2.30
	17.0	18408	18207	18107	18006	2.43	2.52	2.44	2.44
	22.0	18108	17910	17811	17712	2.34	2.34	2.34	2.34
	27.0	17712	17613	17515	17416	2.17	2.16	2.16	2.16
	32.0	17218	17119	17020	16921	2.01	2.00	1.99	1.98
	37.0	17317	17119	17020	16921	1.85	1.83	1.82	1.81
	42.0	17910	17712	17613	17515	1.70	1.67	1.66	1.64
	44.6	18613	18407	18308	18209	1.62	1.50	1.58	1.56
	52.0	18803	18506	18407	18209	1.38	1.34	1.32	1.30
	57.0	18803	18506	18407	18308	1.22	1.17	1.16	1.13
	62.0	18902	18605	18407	18308	1.07	1.01	0.98	0.95
	64.4	18902	18605	18407	18308	0.99	0.93	0.90	0.87
530	-22.0	12514	12380	12313	12247	1.56	1.62	1.57	1.57
	-10.0	14399	14245	14168	14091	1.83	1.89	1.83	1.83
	0.0	15970	15799	15714	15628	2.05	2.12	2.06	2.06
	5.0	16810	16630	16540	16450	2.17	2.25	2.18	2.18
	14.0	17949	17758	17662	17566	2.32	2.40	2.33	2.33
	17.0	18804	18603	18503	18402	2.46	2.55	2.47	2.47
	22.0	18504	18306	18207	18108	2.37	2.37	2.37	2.37
	27.0	18108	18009	17910	17811	2.19	2.19	2.19	2.18
	32.0	17613	17416	17317	17218	2.03	2.02	2.01	2.01
	37.0	17712	17515	17416	17218	1.88	1.86	1.85	1.84
	42.0	18306	18108	18009	17811	1.72	1.69	1.68	1.67
	44.6	19008	18803	18704	18605	1.64	1.52	1.60	1.58
	52.0	19199	18902	18803	18605	1.40	1.36	1.34	1.32
	57.0	19199	18902	18803	18704	1.24	1.19	1.16	1.15
	62.0	19298	19001	18803	18704	1.08	1.03	1.00	0.97
	64.4	19298	19001	18803	18704	1.01	0.94	0.91	0.88
577	-22.0	12646	12512	12445	12378	1.58	1.63	1.58	1.58
	-10.0	14550	14396	14320	14243	1.85	1.91	1.86	1.86
	0.0	16138	15967	15882	15796	2.07	2.15	2.08	2.08
	5.0	16987	16807	16717	16627	2.20	2.28	2.21	2.21
	14.0	18138	17946	17850	17754	2.34	2.43	2.35	2.35
	17.0	19002	18801	18700	18600	2.49	2.58	2.50	2.50
	22.0	18702	18504	18405	18306	2.39	2.40	2.40	2.40
	27.0	18306	18108	18108	18009	2.22	2.22	2.21	2.21
	32.0	17811	17613	17515	17416	2.06	2.04	2.04	2.03
	37.0	17910	17712	17515	17416	1.90	1.88	1.87	1.86
	42.0	18504	18306	18108	18009	1.74	1.71	1.70	1.69
	44.6	19206	19001	18902	18803	1.66	1.54	1.62	1.60
	52.0	19397	19100	19001	18803	1.42	1.38	1.36	1.33
	57.0	19397	19100	19001	18902	1.25	1.20	1.18	1.16
	62.0	19496	19199	19001	18902	1.10	1.04	1.01	0.98
	64.4	19496	19199	19001	18902	1.02	0.96	0.93	0.90

LEGEND
- **TC: Total Cooling Capacity (BTU/hr)**
- **S/T: Sensible Cooling Capacity Ratio**
- **PI: Power Input (kW)**
- **Extrapolated Data - refers to grayed out content**

HEATING PERFORMANCE AT INDOOR DRY BULB TEMPERATURE SIZE 24K

AIRFLOW (CFM)	OUTDOOR DB (°F)	TC: TOTAL CAPACITY IN KILOWATTS				PI:TOTAL POWER IN KILOWATTS			
		Indoor Conditions (DB °F)				Indoor Conditions (DB °F)			
		60.8	68.0	71.6	75.2	60.8	68.0	71.6	75.2
630	-22.0	16573	16439	16306	16239	1.97	2.04	1.99	1.99
	-10.0	19069	18915	18761	18685	2.31	2.39	2.33	2.33
	0.0	21149	20979	20808	20723	2.59	2.68	2.61	2.62
	5.0	22262	22082	21903	21813	2.75	2.84	2.77	2.77
	14.0	23771	23579	23388	23292	2.93	3.03	2.95	2.96
	17.0	24903	24702	24501	24401	3.12	3.22	3.13	3.14
	22.0	24603	24405	24206	24107	3.01	3.02	3.03	3.04
	27.0	24206	23908	23809	23710	2.82	2.82	2.83	2.83
	32.0	23611	23313	23214	23016	2.63	2.62	2.62	2.62
	37.0	23710	23412	23313	23115	2.46	2.45	2.44	2.43
	42.0	24603	24305	24107	24008	2.29	2.27	2.26	2.25
	44.6	25519	25210	25111	24914	2.21	2.09	2.18	2.16
	52.0	25803	25408	25210	25012	1.95	1.91	1.89	1.87
	57.0	25902	25507	25309	25111	1.77	1.72	1.70	1.67
	62.0	26001	25606	25408	25210	1.59	1.54	1.51	1.49
	64.4	26100	25704	25507	25210	1.51	1.45	1.42	1.39
695	-22.0	16968	16766	16699	16632	1.99	2.06	2.00	2.01
	-10.0	19523	19292	19215	19137	2.33	2.42	2.35	2.36
	0.0	21653	21396	21310	21225	2.62	2.71	2.63	2.64
	5.0	22792	22522	22432	22341	2.77	2.87	2.79	2.80
	14.0	24337	24049	23952	23856	2.96	3.06	2.98	2.99
	17.0	25496	25194	25093	24992	3.14	3.26	3.16	3.17
	22.0	25099	24801	24702	24603	3.04	3.05	3.06	3.07
	27.0	24702	24405	24305	24206	2.85	2.85	2.86	2.86
	32.0	24008	23809	23611	23512	2.65	2.65	2.65	2.65
	37.0	24206	23908	23710	23611	2.48	2.47	2.46	2.46
	42.0	25099	24702	24603	24405	2.31	2.29	2.28	2.27
	44.6	26117	25704	25606	25408	2.24	2.11	2.20	2.18
	52.0	26298	25902	25704	25507	1.96	1.93	1.91	1.89
	57.0	26397	26001	25803	25606	1.78	1.74	1.71	1.69
	62.0	26495	26100	25902	25704	1.60	1.55	1.53	1.50
	64.4	26594	26199	26001	25704	1.52	1.46	1.43	1.40
759	-22.0	17035	16901	16768	16701	2.01	2.09	2.03	2.04
	-10.0	19601	19447	19293	19216	2.36	2.44	2.38	2.38
	0.0	21739	21568	21398	21313	2.64	2.74	2.67	2.68
	5.0	22882	22703	22524	22434	2.80	2.91	2.83	2.84
	14.0	24434	24242	24051	23955	2.99	3.10	3.02	3.02
	17.0	25597	25397	25196	25095	3.17	3.29	3.20	3.21
	22.0	25297	25099	24901	24801	3.08	3.09	3.10	3.10
	27.0	24901	24702	24504	24405	2.88	2.88	2.89	2.89
	32.0	24305	24008	23809	23710	2.68	2.68	2.68	2.67
	37.0	24405	24107	24008	23809	2.51	2.50	2.49	2.48
	42.0	25297	25000	24901	24702	2.33	2.31	2.30	2.29
	44.6	26311	26001	25902	25704	2.26	2.13	2.22	2.21
	52.0	26594	26199	26001	25803	1.98	1.94	1.92	1.91
	57.0	26693	26298	26100	25902	1.80	1.75	1.73	1.70
	62.0	26891	26495	26298	26001	1.61	1.57	1.54	1.51
	64.4	26990	26495	26298	26100	1.53	1.47	1.44	1.41

Manufacturer reserves the right to change, at any time, specifications and designs without notice and without obligations.

HEATING PERFORMANCE AT INDOOR DRY BULB TEMPERATURE SIZE 30K

AIRFLOW (CFM)	OUTDOOR DB (°F)	TC: TOTAL CAPACITY IN KILOWATTS				PI:TOTAL POWER IN KILOWATTS			
		Indoor Conditions (DB °F)				Indoor Conditions (DB °F)			
		60.8	68.0	71.6	75.2	60.8	68.0	71.6	75.2
712	-22.0	14629	14437	14373	14309	1.80	1.85	1.85	1.86
	-10.0	16832	16612	16538	16465	2.10	2.17	2.16	2.18
	0.0	18668	18424	18342	18261	2.36	2.43	2.43	2.45
	5.0	19650	19393	19307	19221	2.50	2.58	2.57	2.60
	14.0	20982	20708	20616	20524	2.67	2.75	2.74	2.77
	17.0	21982	21694	21598	21502	2.83	2.92	2.91	2.94
	22.0	22684	22387	22288	22189	2.79	2.84	2.87	2.90
	27.0	23378	23080	22981	22783	2.74	2.79	2.81	2.84
	32.0	23774	23477	23279	23180	2.69	2.74	2.76	2.78
	37.0	25062	24665	24566	24368	2.65	2.70	2.73	2.75
	42.0	27142	26845	26647	26448	2.62	2.67	2.69	2.72
	44.6	29432	29110	28417	28219	2.60	2.64	2.67	2.70
	52.0	30892	30496	30298	30001	2.54	2.58	2.60	2.62
	57.0	32180	31684	31486	31288	2.50	2.54	2.56	2.58
	62.0	33467	32972	32675	32477	2.45	2.49	2.51	2.53
	64.4	34061	33566	33269	33071	2.43	2.47	2.49	2.50
806	-22.0	14949	14758	14694	14630	1.81	1.87	1.86	1.88
	-10.0	17201	16980	16907	16833	2.13	2.19	2.18	2.21
	0.0	19077	18833	18751	18670	2.38	2.46	2.45	2.48
	5.0	20081	19823	19737	19652	2.53	2.61	2.60	2.62
	14.0	21442	21167	21076	20984	2.70	2.78	2.77	2.80
	17.0	22463	22175	22079	21983	2.86	2.96	2.94	2.97
	22.0	23180	22882	22783	22684	2.82	2.88	2.90	2.93
	27.0	23873	23576	23477	23279	2.76	2.82	2.84	2.87
	32.0	24269	23972	23774	23675	2.72	2.76	2.78	2.81
	37.0	25557	25260	25062	24864	2.68	2.73	2.76	2.77
	42.0	27736	27340	27142	27043	2.65	2.70	2.72	2.75
	44.0	30135	29704	29011	28813	2.63	2.67	2.70	2.73
	52.0	31486	31090	30892	30694	2.57	2.61	2.63	2.65
	57.0	32774	32378	32081	31883	2.52	2.56	2.58	2.60
	62.0	34061	33566	33368	33170	2.48	2.52	2.54	2.56
	64.0	34655	34259	33962	33764	2.46	2.50	2.51	2.53
895	-22.0	15026	14899	14771	14708	1.83	1.89	1.88	1.90
	-10.0	17289	17143	16996	16923	2.14	2.21	2.21	2.23
	0.0	19175	19012	18850	18769	2.40	2.48	2.48	2.50
	5.0	20184	20013	19842	19756	2.54	2.63	2.62	2.65
	14.0	21552	21369	21187	21096	2.71	2.81	2.80	2.83
	17.0	22578	22387	22196	22100	2.88	2.98	2.97	3.00
	22.0	23378	23180	22981	22882	2.85	2.90	2.93	2.96
	27.0	24071	23774	23675	23477	2.79	2.84	2.87	2.90
	32.0	24467	24170	24071	23873	2.74	2.78	2.81	2.84
	37.0	25854	25458	25260	25161	2.71	2.76	2.78	2.80
	42.0	28033	27637	27439	27241	2.68	2.73	2.75	2.77
	44.0	30431	30001	29308	29110	2.66	2.70	2.73	2.76
	52.0	31784	31387	31189	30991	2.60	2.64	2.66	2.68
	57.0	33170	32675	32477	32180	2.55	2.60	2.62	2.64
	62.0	34457	33962	33665	33467	2.51	2.55	2.57	2.59
	64.4	35051	34556	34358	34061	2.49	2.53	2.55	2.57

Manufacturer reserves the right to change, at any time, specifications and designs without notice and without obligations.

HEATING PERFORMANCE AT INDOOR DRY BULB TEMPERATURE SIZE 36K

AIRFLOW (CFM)	OUTDOOR DB (°F)	TC: TOTAL CAPACITY IN KILOWATTS				PI:TOTAL POWER IN KILOWATTS			
		Indoor Conditions (DB °F)				Indoor Conditions (DB °F)			
		60.8	68.0	71.6	75.2	60.8	68.0	71.6	75.2
865	-22.0	17815	17625	17498	17434	1.91	1.96	1.99	2.02
	-10.0	20498	20279	20133	20060	2.23	2.30	2.34	2.37
	0.0	22734	22491	22329	22248	2.51	2.58	2.62	2.65
	5.0	23930	23674	23504	23419	2.66	2.73	2.78	2.81
	14.0	25552	25279	25098	25007	2.83	2.92	2.96	3.00
	17.0	26769	26483	26293	26197	3.01	3.10	3.15	3.19
	22.0	27872	27574	27376	27277	3.02	3.11	3.16	3.21
	27.0	28963	28566	28368	28269	3.06	3.15	3.20	3.25
	32.0	29558	29260	29062	28864	3.09	3.19	3.24	3.29
	37.0	31343	30947	30748	30550	3.16	3.26	3.31	3.36
	42.0	34220	33823	33625	33327	3.23	3.34	3.39	3.44
	44.6	37246	36814	35923	35626	3.27	3.43	3.43	3.48
	52.0	39189	38694	38397	38200	3.35	3.46	3.51	3.56
	57.0	40970	40476	40179	39882	3.40	3.51	3.57	3.62
	62.0	42752	42158	41861	41564	3.46	3.57	3.63	3.68
	64.4	43642	43049	42752	42356	3.48	3.60	3.65	3.71
971	-22.0	18195	18004	17878	17814	1.93	1.98	2.01	2.04
	-10.0	20935	20716	20570	20497	2.26	2.32	2.36	2.39
	0.0	23219	22976	22814	22733	2.53	2.60	2.65	2.68
	5.0	24440	24185	24014	23929	2.68	2.76	2.80	2.84
	14.0	26097	25824	25642	25551	2.86	2.94	2.99	3.03
	17.0	27340	27054	26863	26768	3.04	3.13	3.18	3.22
	22.0	28467	28169	27971	27872	3.05	3.14	3.19	3.24
	27.0	29558	29161	28963	28864	3.08	3.18	3.23	3.28
	32.0	30252	29856	29657	29459	3.12	3.22	3.27	3.32
	37.0	32038	31641	31443	31244	3.19	3.29	3.34	3.39
	42.0	35013	34517	34319	34121	3.26	3.37	3.42	3.47
	44.6	38146	37606	36616	36418	3.30	3.46	3.46	3.51
	52.0	40080	39486	39288	38991	3.38	3.49	3.54	3.60
	57.0	41861	41267	40970	40773	3.43	3.54	3.60	3.65
	62.0	43642	43049	42752	42455	3.48	3.60	3.66	3.71
	64.4	44533	43939	43642	43346	3.51	3.63	3.68	3.74
1083	-22.0	18407	18153	18089	17962	1.94	2.00	2.03	2.06
	-10.0	21179	20887	20814	20668	2.28	2.34	2.38	2.42
	0.0	23489	23165	23084	22922	2.56	2.63	2.67	2.71
	5.0	24725	24384	24298	24128	2.71	2.79	2.83	2.87
	14.0	26401	26037	25946	25764	2.89	2.97	3.02	3.07
	17.0	27658	27277	27181	26991	3.07	3.16	3.21	3.26
	22.0	28764	28368	28269	28070	3.08	3.17	3.22	3.27
	27.0	29856	29459	29260	29062	3.12	3.21	3.26	3.31
	32.0	30550	30153	29955	29756	3.15	3.25	3.30	3.35
	37.0	32335	31938	31740	31542	3.23	3.33	3.38	3.43
	42.0	35410	34914	34617	34418	3.30	3.40	3.46	3.51
	44.6	38541	38002	37012	36814	3.34	3.50	3.50	3.55
	52.0	40476	39981	39684	39387	3.42	3.53	3.58	3.64
	57.0	42356	41762	41465	41168	3.47	3.59	3.64	3.70
	62.0	44137	43543	43247	42950	3.53	3.64	3.70	3.76
	64.4	45028	44434	44137	43840	3.55	3.67	3.73	3.79

Manufacturer reserves the right to change, at any time, specifications and designs without notice and without obligations.

APPLICATION DATA

Unit Selections

Select equipment that either matches or supports slightly more than the anticipated peak load. This provides better humidity control, fewer unit cycles, and less part-load operation.

For units used in spaces with high sensible loads, base equipment selection on unit sensible load, not on total anticipated load. Adjust for anticipated room wet bulb temperature to avoid undersizing the equipment.

Unit Mounting (Outdoor)

Refer to the unit's installation instructions for further details.

Unit leveling - For reliable operation, units should be level in all planes.

Clearance - Minimum clearance (see Fig. 7 — on page 9) must be provided for airflow. The condensing units are designed for free-flow application. Air inlets and outlets should not be restricted.

Unit location - A location which is convenient to installation and not exposed to strong winds. A location that can bear the weight of the outdoor unit and where the outdoor unit can be mounted in a level position.

Do not install the indoor or outdoor units in a location with special environmental conditions. For those applications, contact your sales representative.

System Operating Conditions

OPERATING RANGE MIN/MAX °F / °C

All sizes 6-36 (115V and 208/230V):

- **Cooling: -22/130 (-30/55)**
- **Heating: -22/86 (-30/30)**

NOTE: Without intervention, the unit may continue to run at temperatures outside of the specified operating temperatures. However, operation outside of the specified temperature range may result in decreased performance and may cause damage to the unit.

METERING DEVICES

The outdoor unit has an electronic expansion valve to manage the refrigerant flow of the connected fan coil.

DRAIN CONNECTIONS

Install drains to meet the local sanitation codes.

REFRIGERANT LINES

General refrigerant line sizing:

1. The outdoor units are shipped with a full charge of R410A refrigerant. All charges, line sizing, and capacities are based on runs of 25 ft. (7.6 m). For runs over 25 ft. (7.6 m), review "Long Line Applications:" on page 65 for the proper charge adjustments.
2. Refrigerant lines should not be buried in the ground. If it is necessary to bury the lines, do not bury more than 36-in (914 mm). Provide a minimum 6-in (152 mm) vertical rise to the service valves to prevent refrigerant migration.
3. Both lines must be insulated. Use a minimum of 1/2-in. (12.7 mm) thick insulation. Closed-cell insulation is recommended in all long-line applications.
4. Special consideration should be given to isolating the interconnecting tubing from the building structure. Isolate the tubing so vibration or noise is not transmitted into the structure.

Long Line Applications:

1. No change in line sizing is required.
2. Add refrigerant per the **Additional Charge Table**.

Additional Charge Table

UNIT SIZE	TOTAL LINE LENGTH ft (m)		ADDITIONAL CHARGE, oz/ft. ft (m)			
	Min	Max	10-25 (3-8)	>25-82 (8-25)	>82-98 (25-30)	>98-213 (30-65)
6	10 (3)	82 (25)	None	0.16		
9						
12						
18		98 (30)			0.16	
24		164 (50)		0.32		
30						
36		213 (65)				

CAUTION

When the outdoor unit is matched with a Multi-Family or Residential Fan Coil and due the need to braze the piping on the fan coil side it is **REQUIRED** to flow Nitrogen in the system while brazing the line set since a filter drier is not recommended to be used with these condensing units.

WIRING

All wires must be sized per NEC (National Electrical Code) or CEC (Canadian Electrical Code) and local codes. Use Electrical Data table MCA (minimum circuit amps) and MOCP (maximum over current protection) to correctly size the wires and the disconnect fuse or breakers respectively.

Recommended Connection Method for Power and Communication Wiring:

The main power is supplied to the outdoor unit. The field supplied 14/3 power/communication wiring, from the outdoor unit to the indoor unit, consists of four (4) wires and provides the power for the indoor unit. Two wires are high voltage AC power, one is communication wiring and the other is a ground wire. Wiring between indoor and outdoor unit is polarity sensitive. The use of BX wire is **NOT** recommended.

If installed in a high Electromagnetic field (EMF) area and communication issues exists, a 14/2 stranded shielded wire can be used to replace L2 and (S) between outdoor unit and indoor unit landing the shield onto ground in the outdoor unit only.

CAUTION

EQUIPMENT DAMAGE HAZARD

Failure to follow this caution may result in equipment damage or improper operation.

CAUTION

EQUIPMENT DAMAGE HAZARD

Failure to follow this caution may result in equipment damage or improper operation.

Be sure to comply with local codes while running wire from the indoor unit to the outdoor unit.

Every wire must be connected firmly. Loose wiring may cause the terminal to overheat or result in unit malfunction. A fire hazard may also exist. Ensure all wiring is tightly connected.

No wire should touch the refrigerant tubing, compressor or any moving parts.

Disconnecting means must be provided and shall be located within sight and readily accessible from the air conditioner.

NOTE: Matches with Multi-Family and Residential Fan Coils require separate power for the indoor and outdoor unit. A 24V interface kit is required for compatibility. Refer to the 24V Interface Kit Installation Manual.

Sound Pressure in Octave Bands

	Frequency (Hz)	63	125	250	500	1000	2000	4000	8000
12 K (115 V)	Cooling dB(A)	58.5	55.9	58.1	51.1	46.0	41.4	34.8	28.6
	Heating dB(A)	58.8	57.4	57.4	53.6	47.3	43.5	37.2	31.9
	Indoor dB(A)	40.8	33.0	34.3	34.1	33.7	26.6	19.4	14.1
6K (208V)	Cooling dB(A)	57.5	53.2	56.9	49.6	45.2	41.4	36.5	31
	Heating dB(A)	57.3	53.2	58.4	51.2	46.1	43.6	38.5	34.9
	Indoor dB(A)	38.1	30.9	33.6	33.5	31.7	25.9	22.6	16.7
9K (208V)	Cooling dB(A)	53.1	51.2	52.6	49.5	40.1	36.5	29.1	26.3
	Heating dB(A)	57.6	55.0	52.3	50.1	45.5	42.2	36.8	30.0
	Indoor dB(A)	45.2	38.8	38.1	40.8	38.9	35.1	24.0	14.8
12K (208V)	Cooling dB(A)	54.4	55.4	51.6	52.6	42.1	37.9	31.5	30.1
	Heating dB(A)	63.7	59.9	55.4	52.2	48.7	45.1	39.1	34.8
	Indoor dB(A)	39.5	31.0	33.3	32.5	31.5	23.9	17.9	14.4
18K (208V)	Cooling dB(A)	56.5	60.8	56.2	53.3	51.8	46.0	38.1	33.2
	Heating dB(A)	58.8	63.5	57.9	54.3	51.7	45.0	38.9	31.2
	Indoor dB(A)	39.5	41.5	41.9	41.6	43.0	37.5	33.5	21.4
24K (208V)	Cooling dB(A)	68.3	69.2	62.9	56.3	54.6	50.4	46.5	41.3
	Heating dB(A)	65.9	68.6	65.3	58.7	57.5	53.8	48.5	44.5
	Indoor dB(A)	44.3	38.8	42.9	39.4	40.5	34.5	26.2	25.6
30K (208V)	Cooling dB(A)	62.4	58.3	56.8	55.4	51.4	45.5	42.5	35.1
	Heating dB(A)	62.5	58.4	57.5	54.6	52.4	48.4	45.0	38.7
	Indoor dB(A)	47.2	38.9	45.8	42.3	42.2	37.6	28.4	23.8
36K (208V)	Cooling dB(A)	56.8	61.8	61.4	54.4	50.7	45.3	43.2	37.1
	Heating dB(A)	58.4	65.0	62.9	57.0	54.9	50.5	46.9	42.3
	Indoor dB(A)	43.5	40.6	45.6	42.2	41.9	37.3	28.6	21.5

Outdoor Unit Sound Pressure Test Conditions

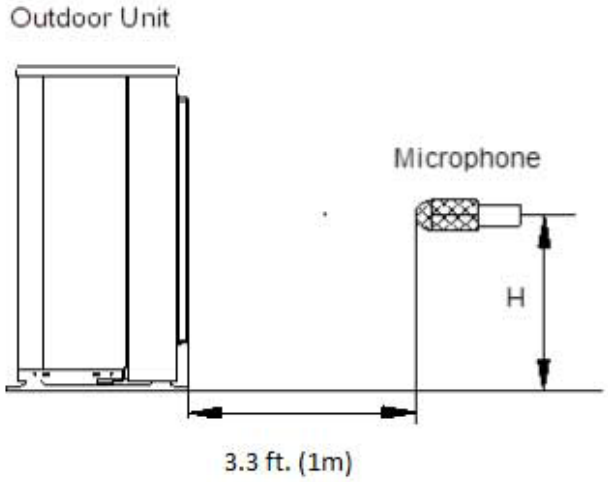

A220462

Fig. 9 —Outdoor Unit Sound Pressure Test

NOTE: H=0.5 x Height of outdoor unit

	INDOOR CONDITION		OUTDOOR CONDITION	
	DB	WB	DB	WB
Cooling	80.6°F (27°C)	66.2°F (19°C)	95°F (35°C)	75.2°F (24°C)
Heating	68°F (20°C)	59°F (15°C)	44.6°F (7°C)	42.8°F (6°C)

ELECTRICAL DATA

SYSTEM SIZE	12 K	9K/6K	12K	18K	24K	30K	36K
V-Ph-Hz	115-1-60	208/230-1-60	208/230-1-60	208/230-1-60	208/230-1-60	208/230-1-60	208/230-1-60
Power supply	3Wires: includes ground wire (Outdoor); 115V-1Ph-60Hz, 208/230V-1Ph-60Hz						
Interconnection to Indoor Unit	Yes						
Shielded Wire (Yes/No)	Yes						

*Permissible limits of the voltage range at which the unit will operate satisfactorily.

LEGEND

FLA - Full Load Amps
MCA - Minimum Circuit Amps
RLA - Rated Load Amps

Fan and Motor Specifications

SYSTEM SIZE		12K	6K	9K	12K	18K	24K	30K	36K
		(115 V)	(208/230 V)	(208/230 V)	(208/230 V)	(208/230 V)	(208/230 V)	(208/230 V)	(208/230 V)
Material	-	Acrylonitrile Styrene +20%GF	Acrylonitrile Styrene +20%GF	Acrylonitrile Styrene +20%GF	Acrylonitrile Styrene +20%GF	Acrylonitrile Styrene +20%GF	Acrylonitrile Styrene +20%GF	Acrylonitrile Styrene +20%GF	Acrylonitrile Styrene +20%GF
Type	-	ZL-421*133*8-3KN	ZL-421*133*8-3KN	ZL-434*144*8-3KN	ZL-434*144*8-3KN	ZL-535*133*12-3KFN	ZL-560*139*12-3KN	ZL-560*139*12-3KN	ZL-560*139*12-3KN
Diameter	inch	16.58 (421)	16.58 (421)	17.09 (434)	17.09 (434)	21.06 (535)	22.05 (560)	22.05 (560)	22.05 (560)
Height	inch	5.24 (133)	5.24 (133)	5.67(144)	5.67(144)	5.24 (133)	5.47 (139)	5.47 (139)	5.47 (139)
Model	-	ZKFN-34-10-1	ZKFN-34-10-1	ZKFN-34-10-1	ZKFN-34-10-1	ZKFN-80-8-3	ZKFN-120-8-2	ZKFN-120-8-2	ZKFN-120-8-2
FLA	A	0.4	0.4	0.4	0.4	0.76	0.5	1.0	1.35
Rated HP	HP	0.045	0.045	0.045	0.045	0.11	0.16	0.16	0.16
Output	W	34	34	34	34	80	120	120	120
Type	-	DC	DC	DC	DC	DC	DC	DC	DC
Insulation class	-	B	B	B	B	E	E	E	E
Safe class	-	IP24	IP24	IP24	IP24	IPX4	IPX4	IPX4	IPX4
Input	W	100.3	100.3	100.3	100.3	120	173	173	173
Range of current	Amps	0.823±10%	0.823±10%	0.823±10%	0.823±10%	1±20%	1.48±10%	1.39±10%	1.39±10%
Rated current	Amps	0.89	0.89	0.89	0.89	0.82	1.21	1.21	1.21
Capacitor	μF	NA	NA	NA	NA	NA	NA	NA	NA
Speed	rev/min	800/700/600	800/700/600	730/660/560	730/660/560	780/700/550	950/800/500	900/700/500	950/700/500 950/700/500‡
Rated RPM	rev/min	800	800	730	730	780	950	900	950
Max. input	W	100.3	100.3	100.3	100.3	120.0	170.0	170.0	170.0

NOTE: ‡ Only Compatible with AHU

CONNECTION DIAGRAMS

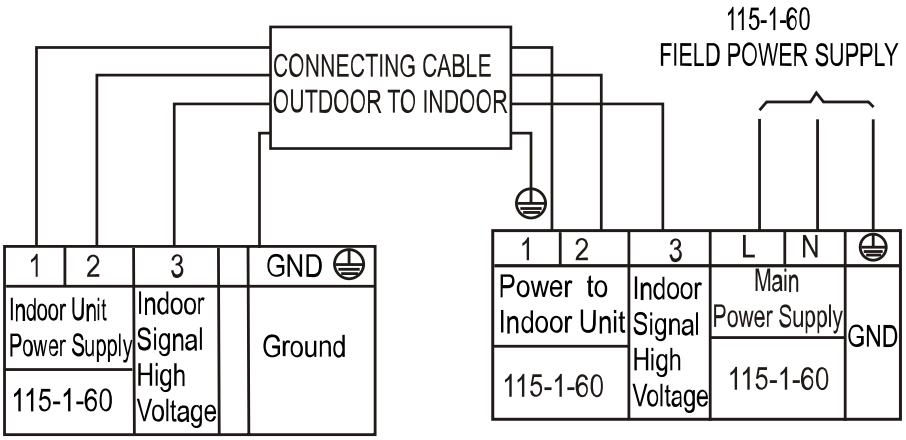

A220424

Fig. 10 —Connection Diagram 12K (115V)

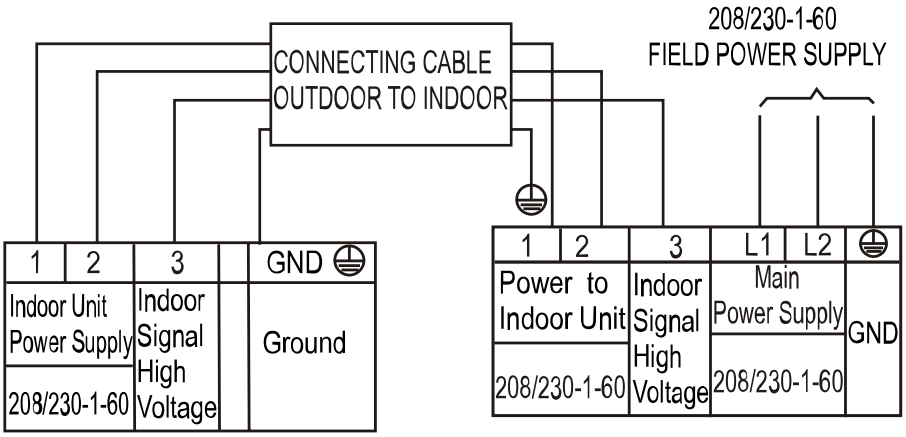

A220425

Fig. 11 —Connection Diagram Sizes 6K-36K (208/230-1-60V)

WIRING DIAGRAMS

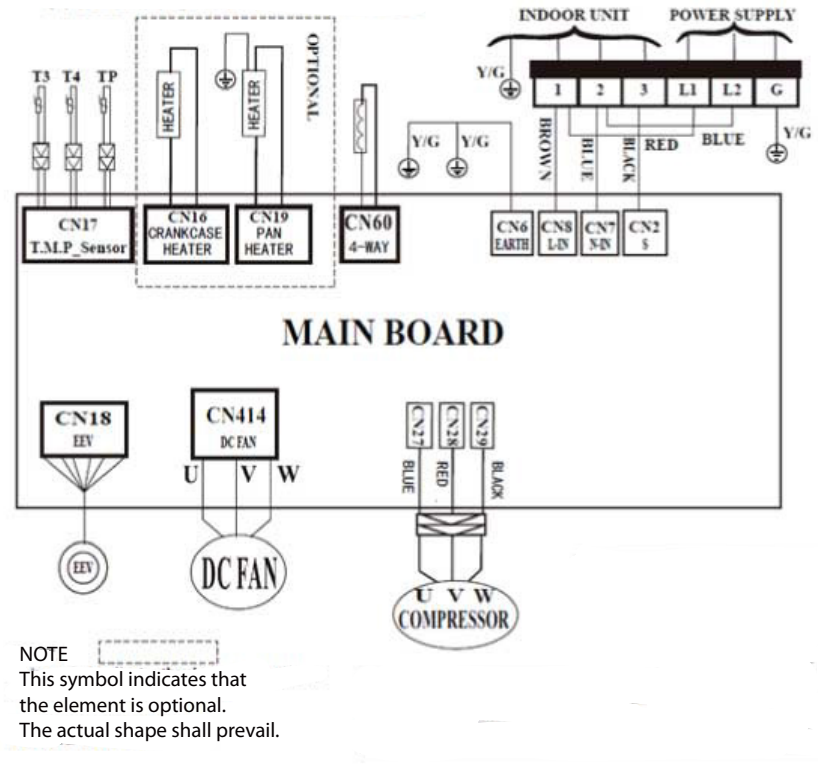

A220426

Fig. 12 —Wiring Diagram Size 12K (115V)

		CN 2/7/8	INPUT	230V	AC
		CN18	OUTPUT	0~12V	DC
		CN414	OUTPUT	0~310V	AC
		CN60	OUTPUT	230V	AC
		CN17	OUTPUT	0~5V	DC
T3	Condenser TEMP. Sensor	CN16	OUTPUT	230V	AC
T4	Ambient TEMP. Sensor	CN19	OUTPUT	230V	AC
TP	Discharge TEMP. Sensor	CN27/28/29	OUTPUT	0~310V	AC

WIRING DIAGRAMS (CONT)

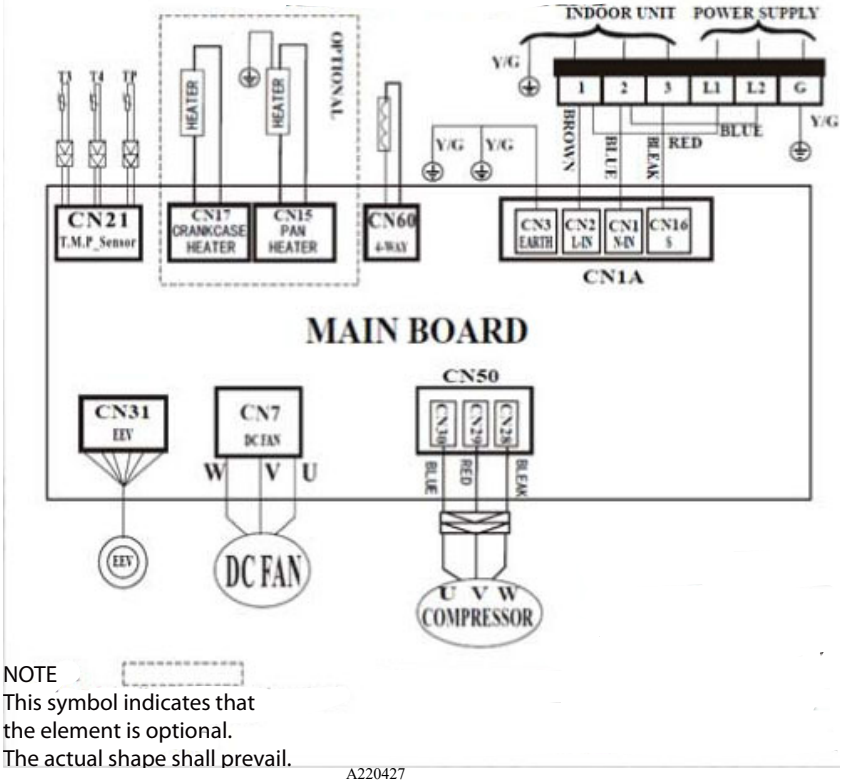

NOTE
This symbol indicates that
the element is optional.
The actual shape shall prevail.

A220427

Fig. 13 — Wiring Diagram - Sizes 6-12K (208/230V)

		CNIA	INPUT	230V	AC
		CN31	OUTPUT	0~12V	DC
		CN7	OUTPUT	0~310V	AC
		CN60	OUTPUT	230V	AC
		CN21	OUTPUT	0~5V	DC
T3	Condenser TEMP. Sensor	CN15	OUTPUT	230V	AC
T4	Ambient TEMP. Sensor	CN17	OUTPUT	230V	AC
TP	Discharge TEMP. Sensor	CN30	OUTPUT	0~310V	AC

WIRING DIAGRAMS (CONTINUED)

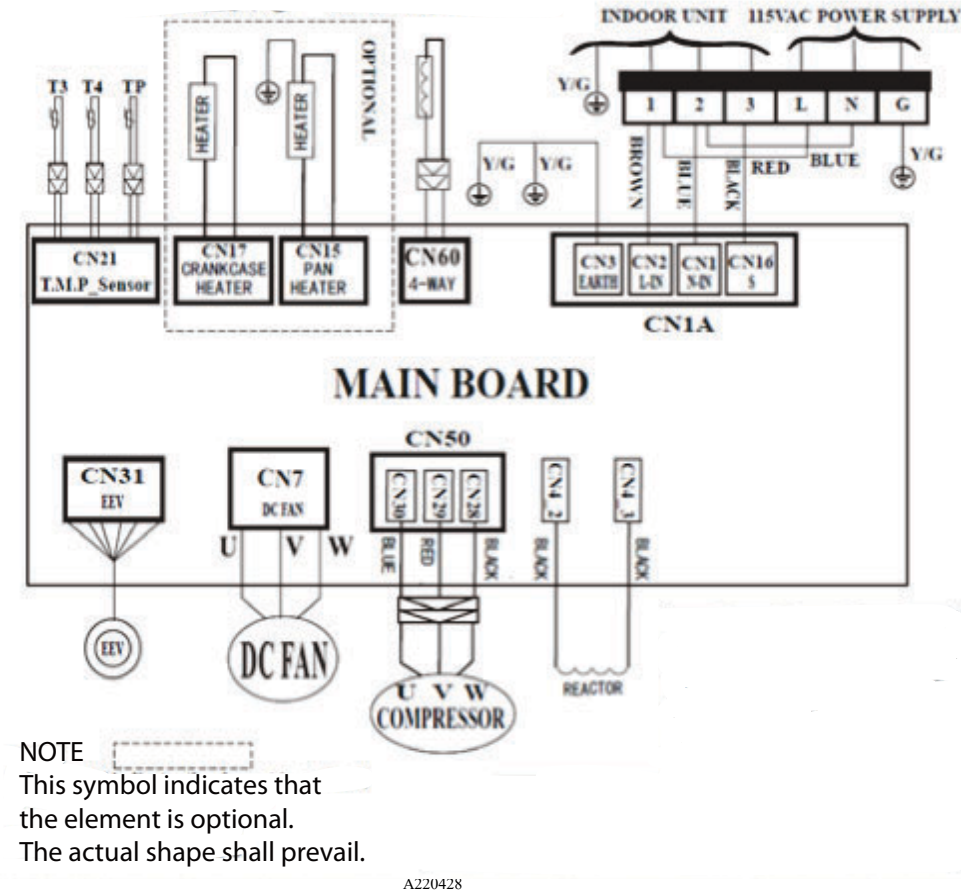

NOTE
This symbol indicates that the element is optional.
The actual shape shall prevail.

A220428

Fig. 14 — Wiring Diagram Size 18K (208/230V)

		CNIA	INPUT	115V	AC
		CN4_2/4_3	INPUT	115V	AC
		CN7	OUTPUT	0~310V	AC
		CN60	OUTPUT	115V	AC
		CN21	OUTPUT	0~5V	DC
T3	Condenser TEMP. Sensor	CN15	OUTPUT	115V	AC
T4	Ambient TEMP. Sensor	CN17	OUTPUT	115V	AC
TP	Discharge TEMP. Sensor	CN50	OUTPUT	0~310V	AC

WIRING DIAGRAMS (CONTINUED)

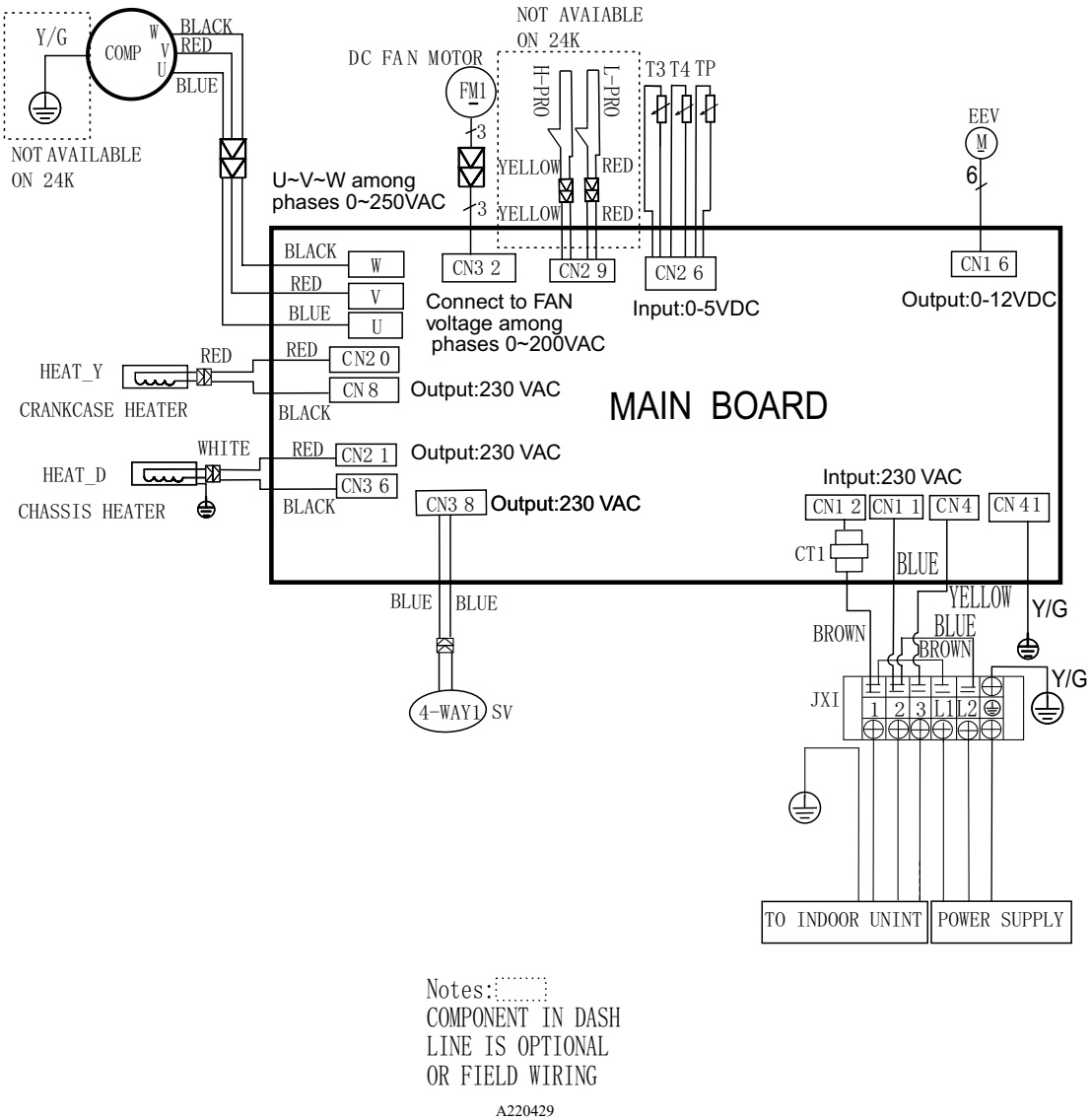

Fig. 15 — Wiring Diagram Sizes 24-36K (208/230V)

CODE	PART NAME
JX1	TERMINAL BLOCK
COMP_TOP	COMP. TOP OLP TEMP. SENSOR
EEV	ELECTRIC EXPANSIVE VALVE
FM1	DC FAN MOTOR
COMP	COMPRESSOR
HEAT_Y	CRAKCASE HEATER
CT1	AC CURRENT DETECTOR
H-PRO	HIGH PRESSURE SWITCH
L-PRO	LOW PRESSURE SWITCH
SV	REVERSE VALVE
TP	COMP. DISCHARGE TEMP. SENSOR
T3	COIL TEMP. SENSOR
T4	OUTDOOR AMBIENT TEMP. SENSOR
HEAT_D	CHASIS HEATER

GUIDE SPECIFICATIONS

HORIZONTAL DISCHARGE OUTDOOR UNITS

Size Range: 1/2 to 3 Ton Nominal Cooling and Heating Capacity Model Number: **38MARB**

Part 1 - GENERAL

1.01 System Description

1. Outdoor air-cooled split system compressor sections suitable for on-the-ground, rooftop, wall hung or balcony mounting. Units consist of a rotary compressor, an air-cooled coil, propeller-type draw-through outdoor fan, reversing valve (HP), accumulator (HP units), metering device(s), and a control box. Units discharge air horizontally as shown on the contract drawings. Units function as the outdoor component of an air-to-air heat pump system.
2. Units are to be used in a refrigeration circuit matched to ductless heat pump fan coil units.

1.02 Agency Listings

1. Unit construction complies with ANSI/ASHRAE 15, latest revision, and with the NEC.
2. Units are evaluated in accordance with UL standard 60335-2-40.
3. Units are listed in the CEC directory.
4. Unit cabinet is capable of withstanding 500-hour salt spray test per Federal Test Standard No. 141 (method 6061).
5. Air-cooled condenser coils are leak tested at 550 psig.

1.03 Delivery, Storage, And Handling

Units are shipped in one piece and are stored and handled per unit manufacturer's recommendations.

1.04 Warranty (For Inclusion By Specifying Engineer)

Part 2 - PRODUCTS

2.01 Equipment

A. **General:**

Factory assembled, single piece, air-cooled outdoor unit. Contained within the unit enclosure is all the factory wiring, piping, controls, and the compressor.

B. **Unit Cabinet:**

1. Unit cabinet is constructed of galvanized steel, bonderized and coated with a baked-enamel finish on the inside and outside.
2. Unit access panels is removable with minimal screws and provides full access to the compressor, fan, and control components.
3. The outdoor compartment is isolated and has an acoustic lining to assure quiet operation.

C. **Fans:**

1. Outdoor fans are the direct drive propeller type, and discharges air horizontally. Fans draw air through the outdoor coil.
2. Outdoor fan motors are totally enclosed, single phase motors with class E insulation and permanently lubricated ball bearings. The motor shall be protected by internal thermal overload protection.
3. The shaft has inherent corrosion resistance.
4. Fan blades are non-metallic and statically and dynamically balanced.
5. Outdoor fan openings are equipped with a PVC metal/mesh coated protection grille over the fan.

D. **Compressor:**

1. Compressor is the fully hermetic rotary type.
2. Compressor is equipped with an oil system, operating oil charge, and a motor.
3. Motor is NEMA rated class E, suitable for operation in a refrigerant atmosphere.
4. Compressor assembly is installed on rubber vibration isolators.

E. **Outdoor Coil:**

The coil is constructed of aluminum hydrophilic pre-coated fins mechanically bonded to seamless copper tubes, which are cleaned, dehydrated, and sealed.

F. **Refrigeration Components:**

Refrigerant circuit components include a brass external liquid line service valve with service gage port connections, a suction line service valve with a service gage connection port, service gage port connections on compressor suction and discharge lines with Schrader type fittings with brass caps, accumulator, reversing valve.

G. **Controls and Safeties:**

Operating controls and safeties are factory selected, assembled, and tested. The minimum control functions include the following:

1. Controls:
   - **A time delay control sequence is provided standard through the fan coil board**
   - **Automatic outdoor fan motor protection.**
2. Safeties:
   - **System diagnostics**
   - **Compressor motor current and temperature overload protection**
   - **Outdoor fan failure protection.**

H. **Electrical Requirements:**

1. Unit operates on single-phase, 60 Hz power at 115V for unit size 12 and 208/230V for unit sizes 06, 09, 12, 18, 24, 30, 36, and 36 (AHU Only) as specified.
2. Unit electrical power has a single point connection.
3. Unit Control voltage to the indoor fan coil is 0-15V DC.
4. All power and control wiring must be installed per NEC and all local electrical codes.
5. The unit has high and low voltage terminal block connections.

© 2023 Carrier. All rights reserved.

Manufacturer reserves the right to change, at any time, specifications and designs without notice and without obligations.