38MTRA
Multi-zone Heat Pump Outdoor Unit Ductless System
Sizes 18K, 27K, 36K, 48K

Product Data

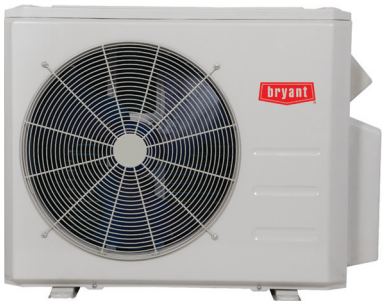

Fig. 1 — Size 18K

Fig. 2 — Sizes 27K, 36K

Fig. 3 — Sizes 48K

NOTE: Images are for illustration purposes only. Actual models may differ slightly.

INDUSTRY LEADING FEATURES / BENEFITS

A competitively priced and creative solution to design problems.

The **38MTR** ductless inverter driven multi-zone system provides individual comfort control for up to 5 separate zones. Match two, three, four or even five space-saving **High Wall** fan coils with one outdoor heat pump. The indoor fan coils are connected to the outdoor unit by refrigerant tubing and wires.

Mount different indoor unit styles in several locations to accommodate the application. This selection of fan coils permits inexpensive and creative solutions to design problems such as:

- Adding air conditioning to spaces that are heated by hydronic or electric heat and have no ductwork
- Historical renovations or any application where preserving the look of the original structure is essential
- Commercial add-on jobs where the existing air conditioning system cannot be stretched.

These compact indoor fan coil units take up very little space in the room and do not obstruct windows. The fan coils are attractively styled to blend with most room decors. Advanced system components incorporate innovative technology to provide reliable cooling and heating performance at low sound levels.

TABLE OF CONTENTS

PAGE
INDUSTRY LEADING FEATURES / BENEFITS 1
MODEL NUMBER NOMENCLATURE 3
STANDARD FEATURES AND ACCESSORIES 4
DIMENSIONS 5
CLEARANCES 8
PHYSICAL DATA 9
PERFORMANCE 10
COOLING PERFORMANCE NON-DUCTED 11
HEATING PERFORMANCE NON-DUCTED 27
APPLICATION DATA 31
UNIT MOUNTING (OUTDOOR) 37
WIRING 38
PIPING REQUIREMENTS 39
FAN AND MOTOR SPECIFICATIONS 41
ELECTRICAL DATA 41
WIRING DIAGRAMS 42
GUIDE SPECIFICATIONS 47

Specifications subject to change without notice.

Inverter Technology

The inverter driven compressor is designed to run at various input power frequencies (Hz) which controls the compressor's motor speed.

Even Temperature – The control package, including the inverter, monitors the outdoor and indoor temperatures as they relate to the selected indoor set point and adjusts the compressor speed to match the load and keep the system operating continuously rather than cycling and creating temperature swings. This translates to higher comfort levels for the occupants.

Rapid Pull Down/Warm-Up – Comfort is increased by the inverter system's ability to ramp up the compressor speed enabling the system to reach the user selected room temperature set point quicker.

Humidity Control – Running the system for longer periods and continuously changing the compressor speed enhances the humidity control.

Individual Room Comfort

Maximum comfort is provided because each space can be controlled individually based on the usage pattern.

Low Sound Levels

When noise is a concern, ductless systems are the answer. The indoor units are whisper quiet. There are no compressors indoors, either in the conditioned space or directly over it, and there is none of the noise usually generated by air being forced through the ductwork.

When sound ordinances and proximity to neighbors demand quiet operation, the **38MTR** unit is the right choice. With the inverter technology, these units run at lower speeds, most of the time resulting in reduced sound levels.

Inverter Technology – Enhanced Economical Operation

Ductless systems are inherently economical to operate. Individual rooms are heated or cooled only when required, and since the air is delivered directly to the space, there is no need to use additional energy to move the air in the ductwork. This economical operation is enhanced further when the inverter system output matches the load resulting in a more efficient system.

Easy-To-Use Controls

The multi-zone systems have microprocessor-based controls to provide the ultimate in comfort and efficiency. The user friendly wired and wireless remote controls provide an interface between the user and the unit.

Secure Operation

If security is an issue, outdoor and indoor units are connected only by refrigerant piping and wiring to prevent intruders from crawling through ductwork or wall openings. Since the **38MTR** can be installed close to an outside wall, coils are protected from vandals and severe weather.

Fast Installation

This compact ductless system is simple to install. A mounting bracket is included with the indoor units and only wires and piping need to run between the indoor and outdoor units. These units are fast and easy to install ensuring minimal disruption to customers in homes or the workplace. The **38MTR** system is only compatible with the value tier highwall.

Simple Servicing and Maintenance

Removing the top panel of the outdoor unit provides immediate access to the control compartment, providing the service technician access to the diagnostic LEDs to facilitate the troubleshooting process. In addition, the draw-thru design of the outdoor unit means that dirt accumulates on the outside surface of the coil. Coils can be cleaned quickly from the inside using a pressure hose and detergent.

On the indoor units, service and maintenance expense is reduced due to the permanent easy to clean filters. Also, error codes appear on the front panel to alert the user to certain system malfunctions.

Built-in Reliability

Ductless system indoor and outdoor units are designed to provide years of trouble-free operation. Both the indoor and outdoor units are well protected. Whenever the microprocessor detects abnormal conditions, the unit stops and an error code appears.

Inverter systems provide additional reliability due to the soft start. This refers to the ability of the inverter to start the compressor motor using reduced voltage and reduced current. This feature is beneficial from an electrical standpoint (eliminates current spikes) as well as an overall reliability standpoint due to reduced stress on all associated system components.

Agency Listings

All systems are listed with AHRI (Air conditioning, Heating, and Refrigeration Institute) and are UL/ETL certified per UL 60335-2-40 standard.

Manufacturer reserves the right to change, at any time, specifications and designs without notice and without obligations.

MODEL NUMBER NOMENCLATURE

OUTDOOR UNIT

38 MT R B Q 18 B A 3

38 = OUTDOOR UNIT

MT = ALL

UNIT TYPE
R = STANDARD/REGULAR HEAT

A = REVISION LEVEL

SYSTEM TYPE
Q = HEAT PUMP

NOMINAL CAPACITY
18 - 1 1/2 TONS
27 - 2 1/4 TONS
36 - 3 TONS
48 - 4 TONS

VOLTAGE
3 = 208/230-1-60

VARIATION
A = STANDARD

MAXIMUM NUMBER OF FAN COIL UNITS THAT CAN BE CONNECTED TO THE OUTDOOR UNIT
B = 1:2
C = 1:3
D = 1:4
E = 1:5

Use of the AHRI Certified TM Mark indicates a manufacturer's participation in the program For verification of certification for individual products, go to www.ahridirectory.org.

STANDARD FEATURES AND ACCESSORIES

Ease Of Installation	
Low Voltage Controls	S
Comfort Features	
Microprocessor Control	S
Auto Restart Function	S
Auto Changeover	S
Low Ambient Cooling	S
Low Ambient Heating	S
Energy Saving Features	
Inverter Driven Compressor	S
46° F Heating Mode (Heating Setback)	S
Safety And Reliability	S
3 Minute Time Delay For Compressor	S
High Compressor Discharge Temperature	S
Low Voltage Protection	S
Compressor Overload Protection	S
Compressor Over Current Protection	S
IPM Module Protection	S
Aluminum Golden Hydrophilic pre-coated fins	S
Ease Of Service And Maintenance	
Diagnostics	S
Error Messages Displayed On Front Panel	S
Application Flexibility	
Crankcase Heater	S
Base pan Heater	S

Legend

S - Standard
A - Accessory

ACCESSORIES

Outdoor Unit Model Number	Sizes	Base Pan Base Rubber Plugs RCD Part No.	Qty. per Unit
38MTRAQ18BA3	18	12600801A00077	25
38MTRAQ27CA3 38MTRAQ36DA3	27 36	12600801A00117	5
38MTRAQ48EA3	48	12600801A00118	5

NOTE: The basepan is built in with multiple holes for proper draining during defrost. For applications where it is required to seal these holes, and re-direct the condensate drain, rubber plugs are available through RCD.

Outdoor Units

Crankcase Heater

The crankcase heater is standard on all unit sizes. Heater clamps must be placed around the compressor oil sump.

Base pan Heater

The base pan heater is standard on all unit sizes.

DIMENSIONS

SYSTEM SIZE		18K	27K	30K	48K
Input Voltage	V	208/230			
Height (H)	in (mm)	26.50(673)	31.89(810)	31.89(810)	52.48(1333)
Width (W)	in (mm)	35.04(890)	37.24(946)	37.24(946)	37.48(952)
Depth (D)	in (mm)	13.46(342)	16.14(410)	16.14(410)	16.34(415)
Weight - Net	lbs. (kg)	100.31(45.5)	139.77(63.4)	169.09(76.7)	225.5(102.3)
PACKAGING					
Height	in (mm)	29.53(750)	34.84(885)	34.84(885)	58.27(1480)
Width	in (mm)	40.55(1030)	42.91(1090)	42.91(1090)	43.11(1095)
Depth	in (mm)	17.24(438)	19.69(500)	19.69(500)	19.49(495)
Weight-Gross	lbs. (kg)	108.69(49.3)	150.57(68.3)	181.44(82.3)	256.6(116.4)
Carton Drawing No.	--	ZXW-1015*423*715S-NS(V4)	ZXW-1075*485*860S-NS(V4)	ZXW-1075*485*860S-NS(V4)	ZXW-1080*480*1365 S-NS1
Carton Material	--	Corrugated fiber board			
Material Thickness	in (mm)	0.28 (7)	0.28 (7)	0.28 (7)	0.28 (7)

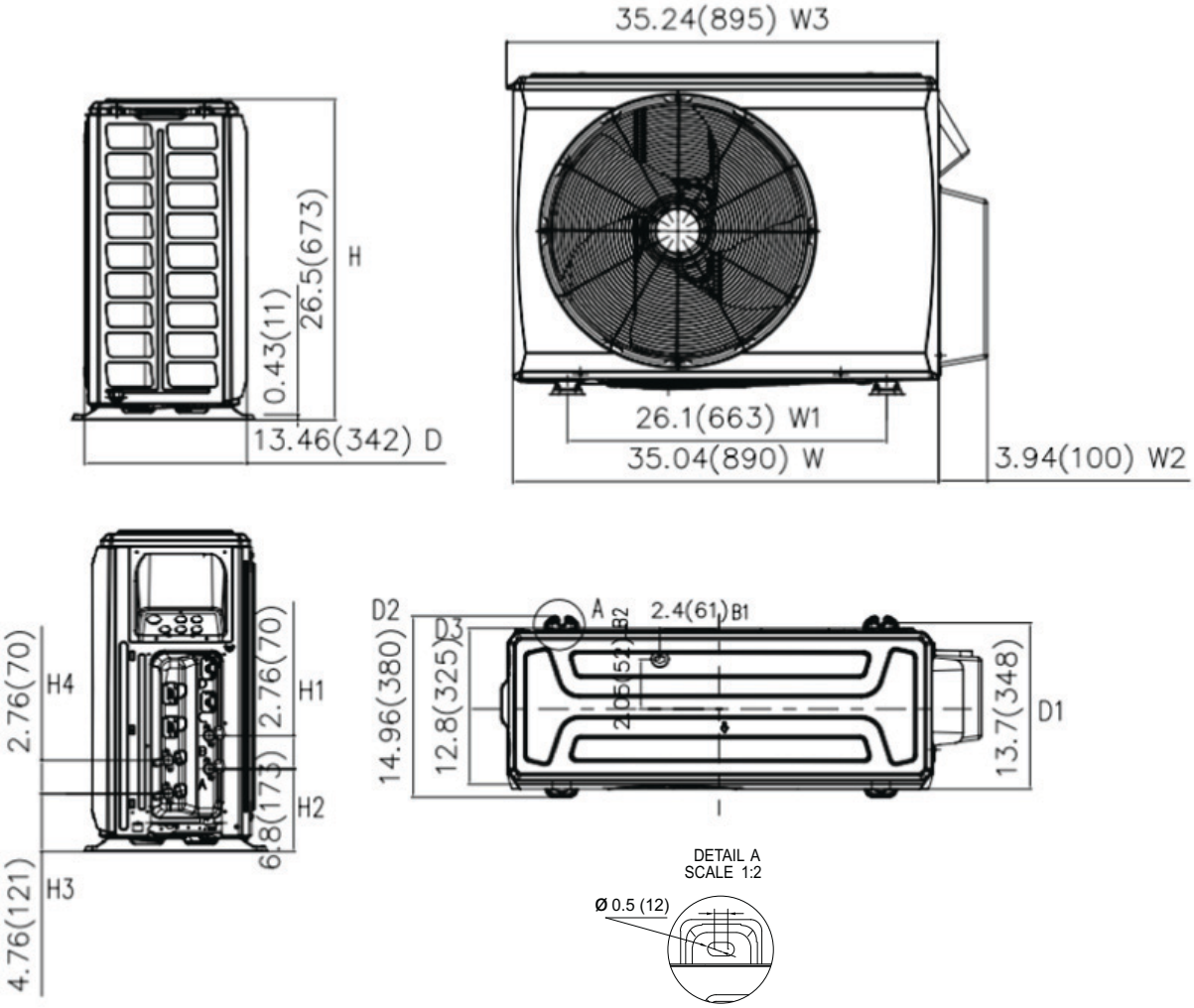

Fig. 4 — Outdoor Dimensions Size 18K

NOTE: Master valves are not available on the 18K unit.

DIMENSIONS (CONT)

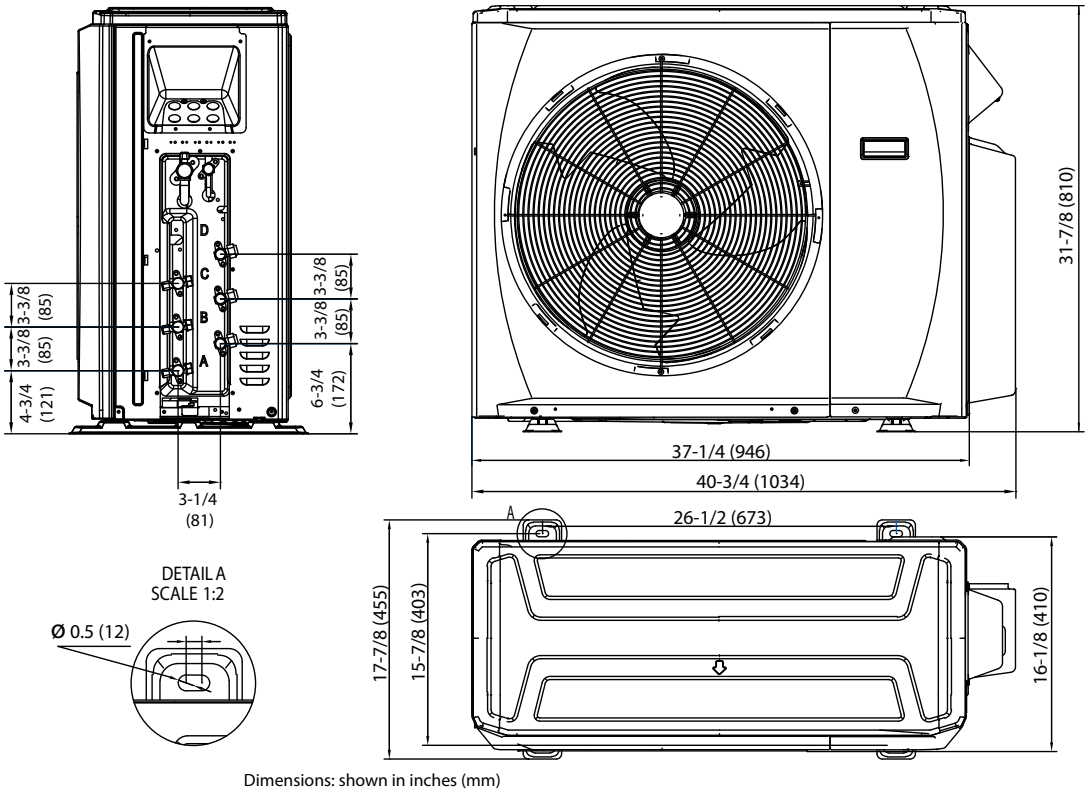

Fig. 5 —Outdoor Dimensions Size 27K

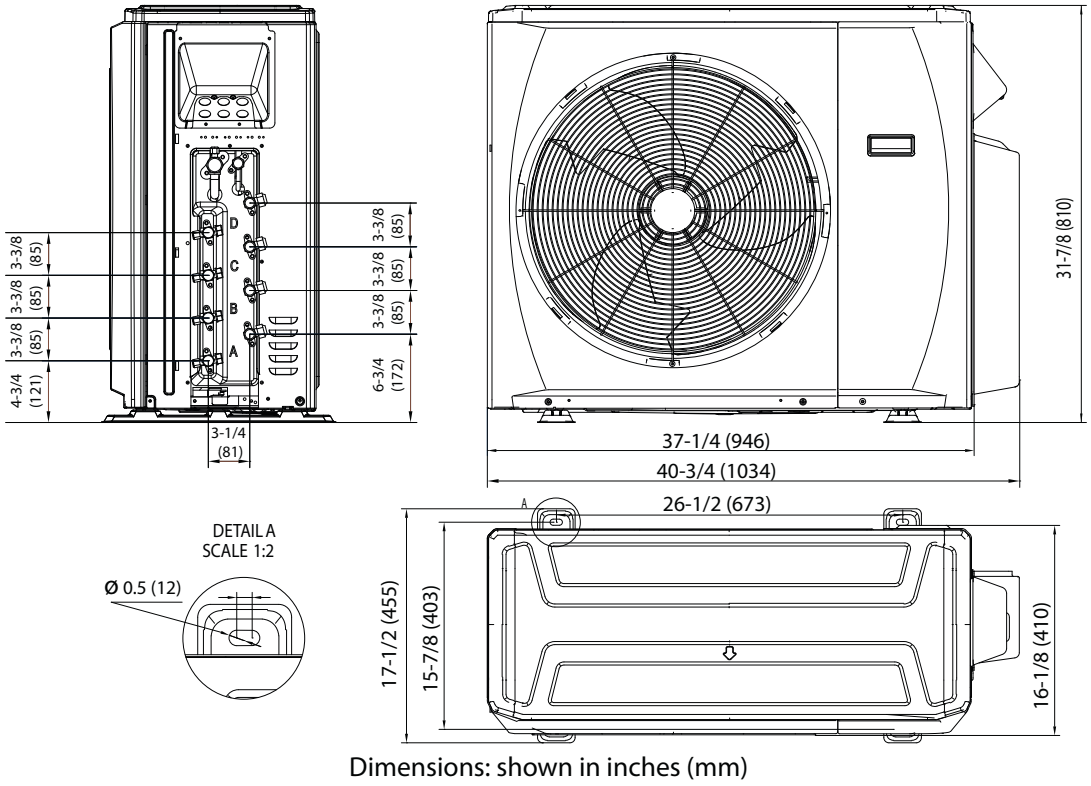

Fig. 6 — Outdoor Dimensions Sizes 36K

DIMENSIONS (CONT)

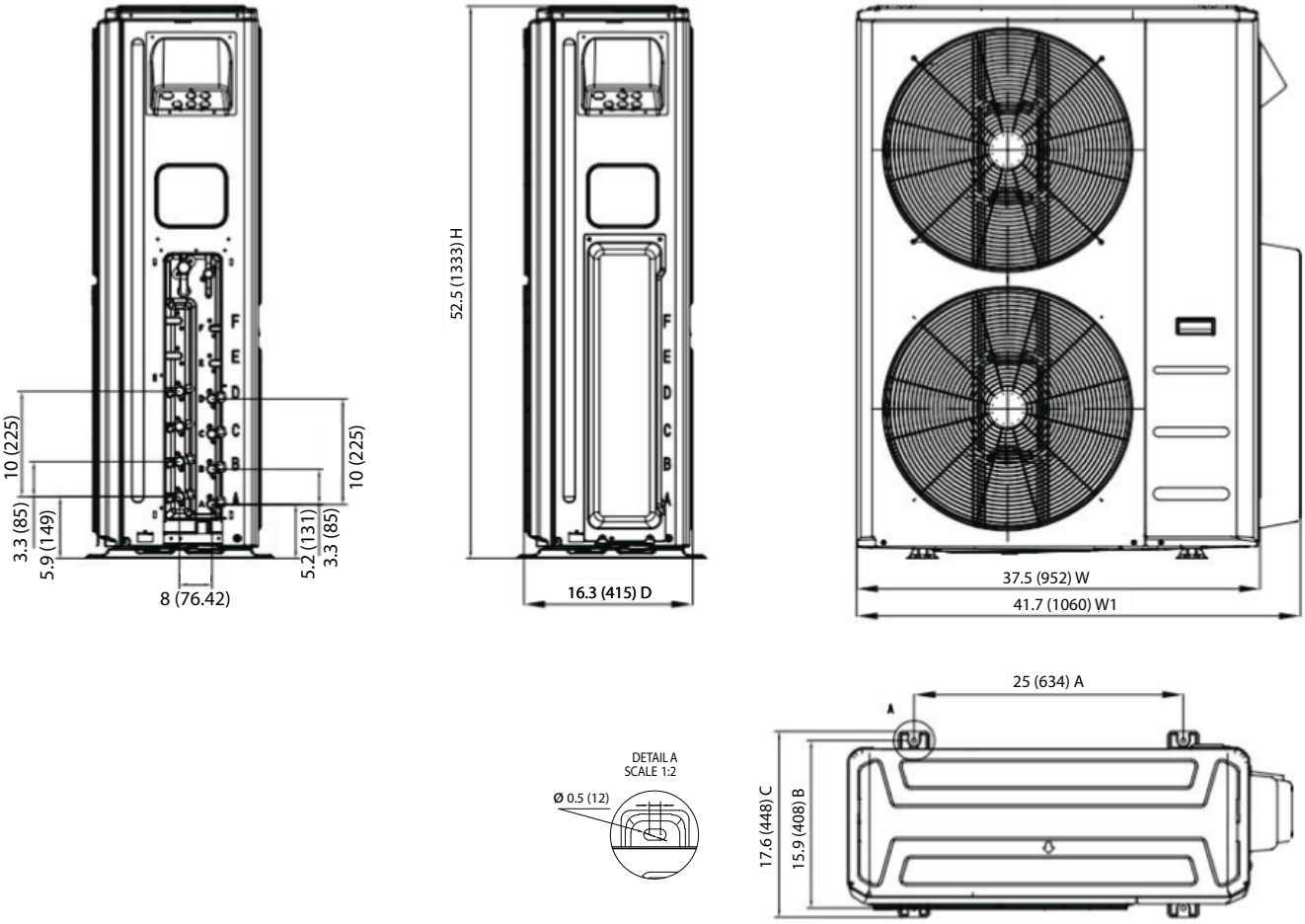

Fig. 7 — Outdoor Dimensions 48K

CLEARANCES

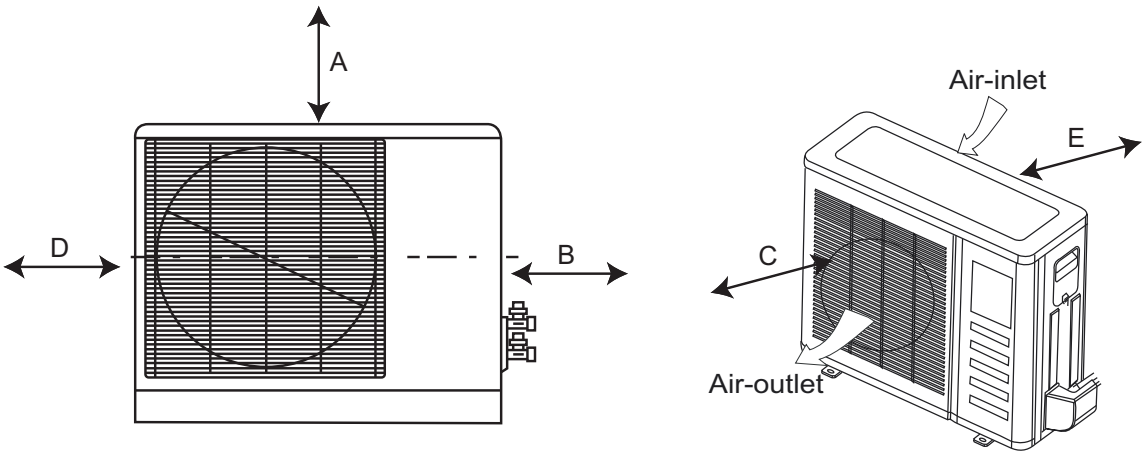

Fig. 8 — Clearances

UNIT	MINIMUM VALUE in. (mm)
A	24 (609)
B	24 (609)
C	24 (609)
D	4 (101)
E	6 (152)

NOTE: The outdoor unit must be mounted at least 2in (50mm) above the maximum anticipated snow depth.

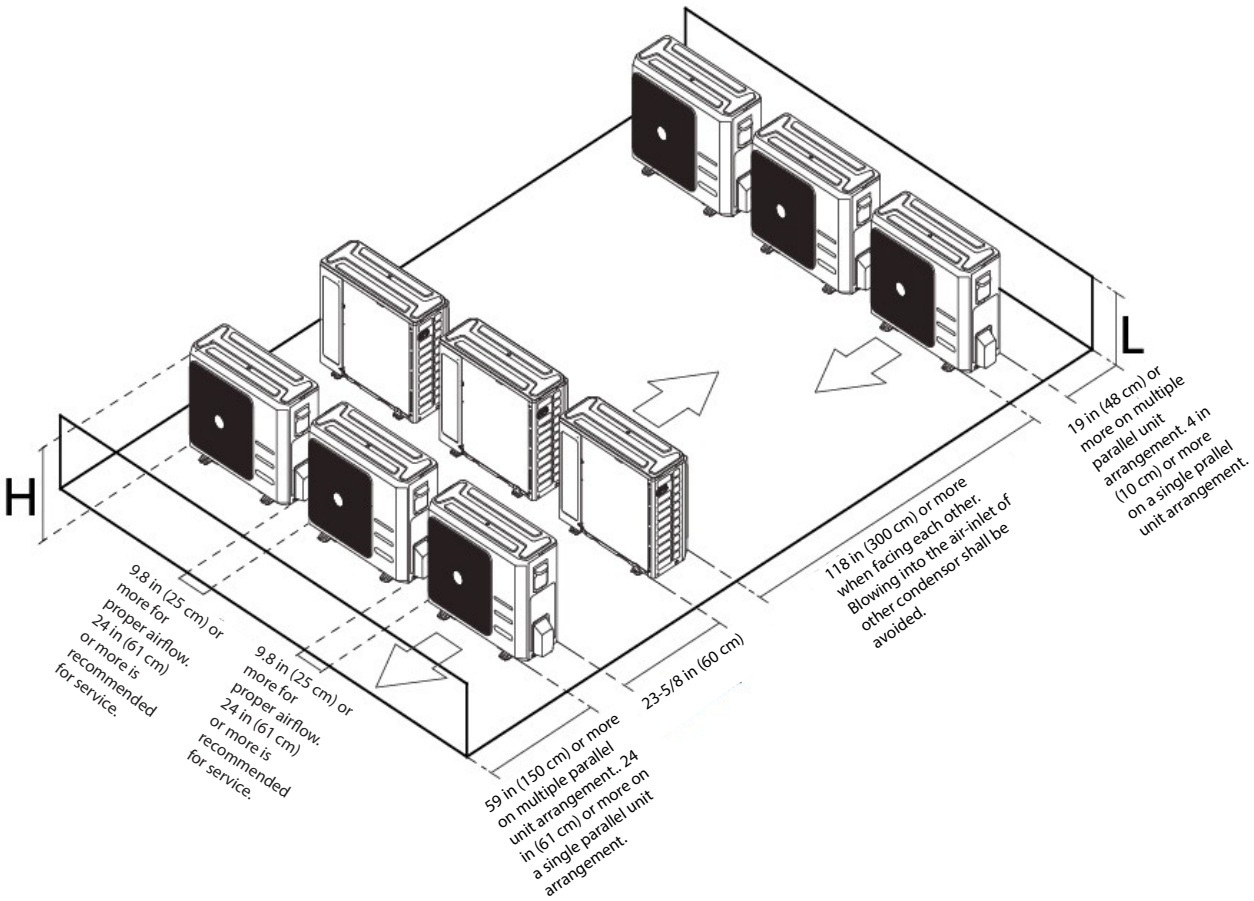

Fig. 9 — Clearances for multiple units

PHYSICAL DATA

SYSTEM	SIZE		18K	27K	36K	48K
	Max Zone Number		2	3	4	5
OPERATING RANGE	Cooling Outdoor DB Min - Max	°F(°C)	5~122 (-30~50)			
	Heating Outdoor DB Min - Max	°F(°C)	-13~75 (-30~24)	-22~75 (-30~24)	-22~75 (-30~24)	-13~75 (-30~24)
PIPING	Total Piping Length	ft (m)	131 (40)	197 (60)	262 (80)	328 (100)
	Piping to furthest FCU	ft (m)	82 (25)	98 (30)	115 (35)	115 (35)
	Drop (OD above ID)	ft (m)	49 (15)	49 (15)	49 (15)	65 (20)
	Lift (OD below ID)	ft (m)	49 (15)	49 (15)	49 (15)	65 (20)
	Pipe Connection Size - Liquid	in (mm)	1/4*2 (6.35*2)	1/4*3 (6.35*3)	1/4*4 (6.35*4)	1/4*5 (6.35*5)
	Pipe Connection Size - Suction	in (mm)	3/8*2 (9.52*2)	3/8*3 (9.52*3)	1/2 *1+ 3/8*3 (12.7*1+9.52*3)	1/2 *2+ 3/8*3 (12.7*2+9.52*3)
REFRIGERANT	Type		R410A			
	Charge	lbs (kg)	4.08 (1.85)	5.73 (2.6)	8.38 (3.8)	10.14 (4.6)
	Metering Device		EXV			
ELECTRICAL	Voltage, Phase, Cycle	V/Ph/Hz	208/230-1-60			
	Power Supply		Indoor unit powered from outdoor unit			
	MCA	A.	18	24.5	25	40
	Recommended Fuse Size	A.	20	25	30	45
	MOCP - Fuse Rating	A.	25	30	40	60
COMPRESSOR	Type		Rotary Inverter			
	Model		KTN150D30UFZA	KTM240D43UKT	KTF310D43UMT	ATQ360D1UMU
	Oil Type		ESTER OIL VG74			
	Oil Charge	Fl. Oz.	15.2	21	33.8	47.4
	Rated Current	RLA	11	14	18	24
OUTDOOR	Unit Width	in (mm)	35.04 (890)	37.24 (946)	37.24 (946)	37.48 (952)
	Unit Height	in (mm)	26.50 (673)	31.89 (810)	31.89 (810)	52.48 (1333)
	Unit Depth	in (mm)	13.46 (342)	16.14 (410)	16.14 (410)	16.34 (415)
	Net Weight	lbs (kg)	100.31 (45.5)	139.77 (63.4)	169.09 (76.7)	225.5 (102.3)
	Airflow	CFM	1,765	2,129	2,147	4,500
	Sound Pressure	dB(A)	59	61	63	64

Manufacturer reserves the right to change, at any time, specifications and designs without notice and without obligations.

PERFORMANCE

	Size		18K	27K	36K	48K
System	Outdoor Model		38MTRAQ18BA3	38MTRAQ27CA3	38MTRAQ36DA3	38MTRAQ48EA3
	Max Number of Zones		2	3	4	5
Performance Non-Ducted	Energy Star		YES	YES	YES	YES
	Cooling System Tons		1.5	2	2.5	4
	Cooling Rated Cap.	Btu/h	18,000	24,000	30,000	48,000
	Cooling Cap. Range Min - Max	Btu/h	5,600~22,000	9,500~32,100	9,400~41,800	9,900~53,200
	SEER	Btu/h	22.5	24.1	25	22.4
	SEER2	Btu/h	22.9	24.6	26	23.4
	EER	Btu/h	13.3	13.1	12.5	12.5
	EER2 (DOE A2 - 95°F)	Btu/h	13.9	13.4	13	12.5
	EER2 (DOE B2 - 82°F)	Btu/h	18.7	17.33	18.5	15
	Heating Rated Cap. (47°F)	Btu/h	19,000	25,000	30,000	48,000
	Heating Rated Cap. (17°F)	Btu/h	11,000	16,300	17,500	29,600
	Heating Rated Cap. (5°F)	Btu/h	12,400	18,300	23,300	29,500
	Heating Max.Cap. (5°F)	Btu/h	12,400	23,000	29,400	36,000
	Heating Cap. Range Min - Max	Btu/h	5,000~24,400	8,400~34,000	8,100~41,400	12,500~52,000
	HSPF		10.6	11	11.3	11
	COP (47°F)	W/W	3.92	4.1	3.81	3.6
	COP (17°F)	W/W	2.78	2.8	2.82	2.6
	COP (5°F) - Rated	W/W	1.8	1.8	1.9	1.8
	COP (5°F) - Maximum	W/W	1.75	1.75	1.9	1.75

NOTE: See the current compatibility chart for a list of the indoor and outdoor unit match ups.

Manufacturer reserves the right to change, at any time, specifications and designs without notice and without obligations.

COOLING PERFORMANCE NON-DUCTED

"COOLING PERFORMANCE 18K" on page 11
"COOLING PERFORMANCE 27K" on page 15
"COOLING PERFORMANCE 36K" on page 19
"COOLING PERFORMANCE 48K" on page 23

COOLING PERFORMANCE 18K

NON-DUCTED COOLING PERFORMANCE 18K (Sheet 1 of 4)

AIRFLOW (CFM)	OUTDOOR DB (°F)	ID WB (°F)	60.8				64.4				66.2				71.6			
		ID DB (°F)	73.4	77.0	80.6	84.2	73.4	77.0	80.6	84.2	73.4	77.0	80.0	84.20	73.4	77.0	80.6	84.2
320	5	TC	12188	12204	12218	12235	12921	12936	12951	12967	13693	13710	13728	13744	14518	14534	14552	14570
		S/T	0.28	0.33	0.38	0.43	0.30	0.35	0.40	0.46	0.32	0.37	0.42	0.48	0.34	0.40	0.45	0.51
		PI	1.02	1.02	1.02	1.03	1.08	1.08	1.09	1.09	1.15	1.15	1.15	1.15	1.22	1.22	1.22	1.22
	14	TC	12726	12743	12757	12775	13491	13507	13523	13539	14297	14316	14334	14350	15159	15175	15194	15213
		S/T	0.28	0.33	0.38	0.43	0.30	0.35	0.40	0.46	0.32	0.37	0.43	0.49	0.34	0.40	0.45	0.51
		PI	0.99	0.99	0.99	0.99	1.05	1.05	1.05	1.05	1.11	1.11	1.11	1.11	1.18	1.18	1.18	1.18
	17	TC	12905	12923	12937	12955	13681	13697	13713	13730	14498	14517	14536	14552	15372	15389	15408	15428
		S/T	0.28	0.33	0.38	0.43	0.30	0.35	0.40	0.46	0.32	0.38	0.43	0.49	0.34	0.40	0.45	0.52
		PI	0.98	0.98	0.98	0.98	1.04	1.04	1.04	1.04	1.10	1.10	1.10	1.10	1.16	1.17	1.17	1.17
	23	TC	12955	12973	12987	13005	13734	13750	13766	13783	14555	14573	14592	14609	15432	15449	15468	15487
		S/T	0.29	0.34	0.38	0.43	0.30	0.36	0.40	0.46	0.32	0.38	0.43	0.49	0.34	0.40	0.45	0.52
		PI	1.00	1.00	1.01	1.01	1.06	1.06	1.07	1.07	1.13	1.13	1.13	1.13	1.19	1.20	1.20	1.20
	32	TC	13030	13048	13062	13080	13813	13830	13846	13862	14639	14658	14677	14693	15521	15538	15557	15577
		S/T	0.29	0.34	0.38	0.44	0.30	0.36	0.41	0.46	0.32	0.38	0.43	0.49	0.34	0.40	0.46	0.52
		PI	1.04	1.04	1.04	1.04	1.10	1.10	1.11	1.11	1.17	1.17	1.17	1.17	1.24	1.24	1.24	1.24
	41	TC	13125	13143	13158	13175	13914	13931	13947	13964	14746	14765	14784	14801	15635	15652	15671	15691
		S/T	0.29	0.34	0.38	0.44	0.31	0.36	0.41	0.47	0.32	0.38	0.43	0.49	0.34	0.40	0.46	0.52
		PI	1.00	1.00	1.00	1.00	1.06	1.06	1.06	1.06	1.12	1.12	1.13	1.13	1.19	1.19	1.19	1.20
	47	TC	13196	13213	13228	13246	13989	14005	14022	14038	14825	14844	14863	14880	15718	15735	15755	15775
		S/T	0.29	0.34	0.39	0.44	0.31	0.36	0.41	0.47	0.33	0.38	0.43	0.49	0.34	0.40	0.46	0.52
		PI	0.95	0.95	0.95	0.95	1.00	1.00	1.01	1.01	1.06	1.06	1.07	1.07	1.13	1.13	1.13	1.13
	50	TC	13131	13149	13164	13181	13920	13937	13953	13970	14752	14771	14791	14807	15642	15659	15678	15698
		S/T	0.29	0.34	0.39	0.44	0.31	0.36	0.41	0.47	0.33	0.38	0.43	0.50	0.35	0.41	0.46	0.53
		PI	0.95	0.95	0.95	0.95	1.00	1.00	1.00	1.01	1.06	1.06	1.06	1.07	1.13	1.13	1.13	1.13
	59	TC	12938	12955	12970	12987	13716	13732	13748	13764	14535	14554	14573	14589	15411	15428	15447	15467
		S/T	0.29	0.34	0.39	0.44	0.31	0.36	0.41	0.47	0.33	0.38	0.44	0.50	0.35	0.41	0.46	0.53
		PI	0.94	0.94	0.95	0.95	1.00	1.00	1.00	1.00	1.06	1.06	1.06	1.06	1.12	1.12	1.13	1.13
	68	TC	12745	12762	12776	12793	13511	13527	13543	13559	14318	14337	14355	14371	15181	15198	15217	15236
		S/T	0.29	0.34	0.39	0.45	0.31	0.36	0.41	0.47	0.33	0.39	0.44	0.50	0.35	0.41	0.47	0.53
		PI	0.94	0.94	0.94	0.94	1.00	1.00	1.00	1.00	1.06	1.06	1.06	1.06	1.12	1.12	1.12	1.12
	77	TC	12551	12568	12582	12599	13306	13322	13337	13353	14101	14119	14138	14153	14951	14967	14986	15005
		S/T	0.30	0.35	0.40	0.46	0.32	0.37	0.43	0.48	0.34	0.40	0.45	0.51	0.36	0.42	0.48	0.54
		PI	0.94	0.94	0.94	0.94	0.99	1.00	1.00	1.00	1.05	1.06	1.06	1.06	1.12	1.12	1.12	1.12
	86	TC	12117	12133	12147	12163	12845	12860	12875	12891	13613	13630	13648	13663	14433	14449	14467	14485
		S/T	0.30	0.36	0.41	0.46	0.32	0.38	0.43	0.49	0.34	0.40	0.46	0.52	0.36	0.43	0.48	0.55
		PI	1.08	1.08	1.08	1.08	1.14	1.14	1.14	1.15	1.21	1.21	1.21	1.21	1.28	1.28	1.29	1.29
	95	TC	11868	11884	11897	11913	12581	12596	12611	12626	13333	13350	13368	13382	14137	14152	14170	14187
		S/T	0.31	0.37	0.42	0.48	0.33	0.39	0.44	0.50	0.35	0.41	0.47	0.53	0.37	0.44	0.50	0.57
		PI	1.11	1.11	1.11	1.11	1.17	1.17	1.18	1.18	1.24	1.25	1.25	1.25	1.32	1.32	1.32	1.32
	104	TC	8765	8777	8786	8798	9292	9303	9314	9325	9847	9860	9872	9883	10440	10452	10465	10478
		S/T	0.33	0.39	0.44	0.50	0.35	0.41	0.46	0.53	0.37	0.43	0.49	0.56	0.39	0.46	0.52	0.59
		PI	1.97	1.97	1.97	1.98	2.09	2.09	2.09	2.09	2.21	2.21	2.22	2.22	2.35	2.35	2.35	2.35
	114.8	TC	5041	5048	5054	5061	5344	5351	5357	5363	5664	5671	5678	5685	6005	6012	6019	6027
		S/T	0.33	0.39	0.44	0.50	0.35	0.41	0.47	0.54	0.37	0.44	0.50	0.57	0.40	0.46	0.53	0.60
		PI	3.00	3.01	3.01	3.01	3.18	3.19	3.19	3.20	3.37	3.38	3.38	3.39	3.58	3.58	3.59	3.59
	122	TC	2559	2562	2565	2569	2713	2716	2719	2722	2875	2879	2882	2886	3048	3051	3055	3059
		S/T	0.34	0.40	0.46	0.52	0.36	0.43	0.49	0.55	0.39	0.45	0.52	0.59	0.41	0.48	0.55	0.62
		PI	3.69	3.70	3.70	3.71	3.92	3.92	3.92	3.93	4.15	4.15	4.16	4.16	4.40	4.40	4.41	4.41

Manufacturer reserves the right to change, at any time, specifications and designs without notice and without obligations.

NON-DUCTED COOLING PERFORMANCE 18K (Sheet 2 of 4)

AIRFLOW (CFM)	OUTDOOR DB (°F)	ID WB (°F)	60.8				64.4				66.2				71.6			
		ID DB (°F)	73.4	77.0	80.6	84.2	73.4	77.0	80.6	84.2	73.4	77.0	80.0	84.20	73.4	77.0	80.6	84.2
400	5	TC	15084	15104	15121	15142	15991	16010	16029	16048	16946	16968	16990	17009	17968	17987	18010	18032
		S/T	0.37	0.43	0.49	0.56	0.39	0.46	0.52	0.60	0.42	0.49	0.55	0.63	0.44	0.52	0.59	0.67
		PI	1.33	1.33	1.33	1.33	1.41	1.41	1.41	1.41	1.49	1.50	1.50	1.50	1.58	1.59	1.59	1.59
	14	TC	15750	15771	15789	15810	16697	16716	16736	16756	17694	17717	17740	17760	18761	18781	18805	18828
		S/T	0.37	0.44	0.50	0.56	0.39	0.46	0.53	0.60	0.42	0.49	0.56	0.63	0.44	0.52	0.59	0.67
		PI	1.29	1.29	1.29	1.29	1.36	1.36	1.37	1.37	1.44	1.45	1.45	1.45	1.53	1.53	1.53	1.54
	17	TC	15972	15993	16011	16033	16932	16952	16972	16992	17944	17967	17990	18010	19025	19046	19070	19093
		S/T	0.37	0.44	0.50	0.57	0.39	0.46	0.53	0.60	0.42	0.49	0.56	0.64	0.44	0.52	0.59	0.67
		PI	1.27	1.27	1.27	1.28	1.35	1.35	1.35	1.35	1.43	1.43	1.43	1.43	1.51	1.52	1.52	1.52
	23	TC	16034	16055	16073	16095	16997	17017	17038	17058	18013	18036	18060	18080	19099	19120	19144	19167
		S/T	0.37	0.44	0.50	0.57	0.40	0.46	0.53	0.60	0.42	0.49	0.56	0.64	0.44	0.52	0.59	0.68
		PI	1.30	1.31	1.31	1.31	1.38	1.38	1.39	1.39	1.47	1.47	1.47	1.47	1.55	1.56	1.56	1.56
	32	TC	16126	16148	16166	16188	17096	17116	17136	17157	18117	18141	18164	18185	19209	19230	19254	19278
		S/T	0.38	0.44	0.50	0.57	0.40	0.47	0.53	0.60	0.42	0.49	0.56	0.64	0.45	0.52	0.60	0.68
		PI	1.35	1.36	1.36	1.36	1.43	1.44	1.44	1.44	1.52	1.52	1.52	1.53	1.61	1.61	1.62	1.62
	41	TC	16244	16266	16284	16306	17221	17241	17261	17282	18250	18273	18297	18317	19350	19371	19395	19419
		S/T	0.38	0.44	0.50	0.57	0.40	0.47	0.53	0.61	0.42	0.50	0.57	0.64	0.45	0.53	0.60	0.68
		PI	1.30	1.30	1.30	1.31	1.38	1.38	1.38	1.38	1.46	1.46	1.46	1.47	1.55	1.55	1.55	1.55
	47	TC	16331	16353	16371	16394	17313	17333	17354	17374	18347	18371	18395	18416	19453	19474	19499	19523
		S/T	0.38	0.44	0.50	0.57	0.40	0.47	0.53	0.61	0.42	0.50	0.57	0.65	0.45	0.53	0.60	0.68
		PI	1.23	1.23	1.23	1.23	1.30	1.31	1.31	1.31	1.38	1.38	1.39	1.39	1.47	1.47	1.47	1.47
	50	TC	16251	16273	16292	16314	17228	17249	17269	17290	18258	18281	18305	18326	19358	19379	19403	19428
		S/T	0.38	0.44	0.51	0.58	0.40	0.47	0.54	0.61	0.43	0.50	0.57	0.65	0.45	0.53	0.60	0.69
		PI	1.23	1.23	1.23	1.23	1.30	1.30	1.31	1.31	1.38	1.38	1.38	1.39	1.46	1.47	1.47	1.47
	59	TC	16012	16034	16052	16073	16975	16995	17015	17035	17989	18012	18036	18056	19073	19094	19118	19142
		S/T	0.38	0.45	0.51	0.58	0.40	0.47	0.54	0.61	0.43	0.50	0.57	0.65	0.45	0.53	0.61	0.69
		PI	1.23	1.23	1.23	1.23	1.30	1.30	1.30	1.30	1.38	1.38	1.38	1.38	1.46	1.46	1.46	1.47
	68	TC	15773	15794	15812	15833	16721	16741	16761	16781	17720	17743	17766	17786	18789	18809	18832	18856
		S/T	0.38	0.45	0.51	0.58	0.41	0.48	0.54	0.62	0.43	0.51	0.57	0.65	0.46	0.54	0.61	0.69
		PI	1.22	1.22	1.23	1.23	1.30	1.30	1.30	1.30	1.37	1.38	1.38	1.38	1.46	1.46	1.46	1.46
	77	TC	15534	15555	15572	15593	16468	16487	16507	16526	17452	17474	17497	17517	18504	18524	18547	18570
		S/T	0.39	0.46	0.52	0.60	0.42	0.49	0.56	0.63	0.44	0.52	0.59	0.67	0.47	0.55	0.62	0.71
		PI	1.22	1.22	1.22	1.23	1.29	1.30	1.30	1.30	1.37	1.37	1.37	1.38	1.45	1.46	1.46	1.46
	86	TC	14996	15016	15033	15053	15897	15916	15935	15954	16847	16869	16891	16910	17863	17882	17905	17927
		S/T	0.40	0.47	0.53	0.61	0.42	0.50	0.56	0.64	0.45	0.53	0.60	0.68	0.47	0.56	0.63	0.72
		PI	1.40	1.40	1.40	1.41	1.48	1.49	1.49	1.49	1.57	1.58	1.58	1.58	1.67	1.67	1.67	1.67
	95	TC	14688	14708	14724	14744	15571	15589	15608	15626	16501	16522	16544	16562	17496	17515	17537	17558
		S/T	0.41	0.48	0.54	0.62	0.43	0.51	0.58	0.66	0.46	0.54	0.61	0.70	0.49	0.57	0.65	0.74
		PI	1.44	1.44	1.44	1.44	1.53	1.53	1.53	1.53	1.62	1.62	1.62	1.62	1.71	1.72	1.72	1.72
	104	TC	10848	10862	10874	10889	11500	11513	11527	11540	12187	12203	12218	12232	12921	12935	12951	12968
		S/T	0.43	0.50	0.57	0.65	0.45	0.53	0.61	0.69	0.48	0.57	0.64	0.73	0.51	0.60	0.68	0.78
		PI	2.56	2.56	2.57	2.57	2.71	2.72	2.72	2.72	2.88	2.88	2.88	2.89	3.05	3.05	3.06	3.06
	114.8	TC	6239	6248	6255	6263	6614	6622	6630	6638	7009	7019	7028	7036	7432	7440	7449	7459
		S/T	0.43	0.51	0.58	0.66	0.46	0.54	0.61	0.70	0.49	0.57	0.65	0.74	0.52	0.61	0.69	0.79
		PI	3.91	3.91	3.92	3.92	4.14	4.15	4.15	4.16	4.39	4.39	4.40	4.40	4.65	4.66	4.66	4.67
	122	TC	3167	3171	3175	3179	3357	3361	3365	3369	3558	3563	3567	3571	3772	3777	3781	3786
		S/T	0.45	0.53	0.60	0.68	0.48	0.56	0.64	0.72	0.51	0.59	0.67	0.77	0.54	0.63	0.71	0.81
		PI	4.80	4.81	4.81	4.82	5.09	5.10	5.10	5.11	5.40	5.40	5.41	5.42	5.72	5.73	5.73	5.74

Manufacturer reserves the right to change, at any time, specifications and designs without notice and without obligations.

NON-DUCTED COOLING PERFORMANCE 18K (Sheet 3 of 4)

AIRFLOW (CFM)	OUTDOOR DB (°F)	ID WB (°F)	60.8				64.4				66.2				71.6			
		ID DB (°F)	73.4	77.0	80.6	84.2	73.4	77.0	80.6	84.2	73.4	77.0	80.0	84.20	73.4	77.0	80.6	84.2
528	5	TC	19714	19740	19763	19789	20899	20924	20948	20973	22148	22176	22205	22230	23483	23508	23538	23567
		S/T	0.48	0.57	0.64	0.73	0.51	0.60	0.68	0.78	0.54	0.64	0.72	0.83	0.58	0.68	0.77	0.88
		PI	1.74	1.74	1.74	1.74	1.84	1.84	1.85	1.85	1.95	1.95	1.96	1.96	2.07	2.07	2.07	2.08
	14	TC	20584	20612	20635	20663	21821	21847	21873	21899	23125	23155	23185	23211	24519	24546	24577	24607
		S/T	0.49	0.57	0.65	0.74	0.51	0.60	0.69	0.78	0.55	0.64	0.73	0.83	0.58	0.68	0.77	0.88
		PI	1.68	1.68	1.68	1.69	1.78	1.78	1.79	1.79	1.89	1.89	1.89	1.89	2.00	2.00	2.01	2.01
	17	TC	20874	20902	20926	20954	22129	22155	22181	22208	23451	23482	23512	23538	24865	24892	24923	24954
		S/T	0.49	0.57	0.65	0.74	0.52	0.61	0.69	0.78	0.55	0.64	0.73	0.83	0.58	0.68	0.77	0.88
		PI	1.66	1.66	1.67	1.67	1.76	1.76	1.77	1.77	1.87	1.87	1.87	1.87	1.98	1.98	1.98	1.99
	23	TC	20955	20983	21007	21035	22214	22241	22267	22293	23542	23572	23603	23629	24961	24988	25019	25050
		S/T	0.49	0.57	0.65	0.74	0.52	0.61	0.69	0.79	0.55	0.64	0.73	0.83	0.58	0.68	0.78	0.88
		PI	1.70	1.71	1.71	1.71	1.81	1.81	1.81	1.81	1.91	1.92	1.92	1.92	2.03	2.03	2.03	2.04
	32	TC	21076	21104	21128	21157	22343	22369	22396	22422	23678	23709	23740	23766	25105	25133	25164	25195
		S/T	0.49	0.58	0.65	0.75	0.52	0.61	0.69	0.79	0.55	0.65	0.74	0.84	0.58	0.69	0.78	0.89
		PI	1.77	1.77	1.77	1.78	1.88	1.88	1.88	1.88	1.99	1.99	1.99	1.99	2.11	2.11	2.11	2.11
	41	TC	21230	21259	21282	21311	22506	22533	22559	22586	23851	23882	23913	23940	25289	25316	25348	25379
		S/T	0.49	0.58	0.66	0.75	0.52	0.61	0.70	0.79	0.55	0.65	0.74	0.84	0.59	0.69	0.78	0.89
		PI	1.70	1.70	1.70	1.71	1.80	1.80	1.81	1.81	1.91	1.91	1.91	1.92	2.02	2.03	2.03	2.03
	47	TC	21344	21372	21396	21425	22626	22653	22680	22707	23979	24010	24041	24068	25424	25452	25483	25515
		S/T	0.49	0.58	0.66	0.75	0.52	0.61	0.70	0.80	0.56	0.65	0.74	0.84	0.59	0.69	0.78	0.89
		PI	1.61	1.61	1.61	1.61	1.70	1.71	1.71	1.71	1.81	1.81	1.81	1.81	1.92	1.92	1.92	1.92
	50	TC	21239	21268	21292	21321	22516	22543	22569	22596	23862	23893	23924	23950	25300	25328	25359	25391
		S/T	0.50	0.58	0.66	0.75	0.53	0.62	0.70	0.80	0.56	0.65	0.74	0.85	0.59	0.69	0.79	0.90
		PI	1.61	1.61	1.61	1.61	1.70	1.71	1.71	1.71	1.80	1.81	1.81	1.81	1.91	1.92	1.92	1.92
	59	TC	20927	20955	20979	21007	22185	22211	22237	22264	23510	23541	23572	23598	24928	24955	24986	25017
		S/T	0.50	0.58	0.66	0.76	0.53	0.62	0.70	0.80	0.56	0.66	0.75	0.85	0.59	0.70	0.79	0.90
		PI	1.60	1.60	1.61	1.61	1.70	1.70	1.70	1.71	1.80	1.80	1.81	1.81	1.91	1.91	1.91	1.92
	68	TC	20614	20642	20665	20693	21853	21879	21905	21931	23159	23189	23220	23245	24555	24582	24613	24643
		S/T	0.50	0.59	0.67	0.76	0.53	0.62	0.71	0.81	0.56	0.66	0.75	0.86	0.60	0.70	0.80	0.91
		PI	1.60	1.60	1.60	1.60	1.69	1.70	1.70	1.70	1.80	1.80	1.80	1.80	1.90	1.91	1.91	1.91
	77	TC	20302	20329	20352	20379	21522	21548	21573	21599	22808	22838	22867	22893	24183	24209	24240	24270
		S/T	0.51	0.60	0.69	0.78	0.54	0.64	0.73	0.83	0.58	0.68	0.77	0.88	0.61	0.72	0.82	0.93
		PI	1.59	1.60	1.60	1.60	1.69	1.69	1.69	1.70	1.79	1.79	1.80	1.80	1.90	1.90	1.90	1.91
	86	TC	19599	19625	19647	19674	20777	20801	20826	20851	22018	22047	22075	22100	23346	23371	23400	23429
		S/T	0.52	0.61	0.69	0.79	0.55	0.65	0.74	0.84	0.59	0.69	0.78	0.89	0.62	0.73	0.83	0.94
		PI	1.83	1.83	1.83	1.84	1.94	1.94	1.94	1.95	2.06	2.06	2.06	2.06	2.18	2.18	2.18	2.19
	95	TC	19196	19222	19243	19269	20350	20374	20398	20422	21566	21594	21622	21646	22866	22891	22919	22948
		S/T	0.53	0.63	0.71	0.81	0.57	0.66	0.75	0.86	0.60	0.70	0.80	0.91	0.64	0.75	0.85	0.97
		PI	1.88	1.88	1.89	1.89	1.99	2.00	2.00	2.00	2.11	2.12	2.12	2.12	2.24	2.24	2.25	2.25
	104	TC	14177	14196	14212	14231	15029	15047	15065	15083	15927	15948	15969	15986	16887	16906	16927	16948
		S/T	0.56	0.66	0.75	0.85	0.59	0.70	0.79	0.90	0.63	0.74	0.84	0.96	0.67	0.78	0.89	1.02
		PI	3.35	3.35	3.35	3.36	3.55	3.55	3.56	3.56	3.76	3.76	3.77	3.77	3.99	3.99	4.00	4.00
	114.8	TC	8154	8165	8174	8185	8644	8655	8665	8675	9161	9173	9185	9195	9713	9724	9736	9748
		S/T	0.57	0.67	0.76	0.86	0.60	0.71	0.80	0.91	0.64	0.75	0.85	0.97	0.68	0.79	0.90	1.03
		PI	5.10	5.11	5.12	5.12	5.41	5.42	5.42	5.43	5.74	5.74	5.75	5.76	6.08	6.09	6.10	6.10
	122	TC	4139	4145	4149	4155	4388	4393	4398	4403	4650	4656	4662	4667	4930	4936	4942	4948
		S/T	0.59	0.69	0.78	0.89	0.62	0.73	0.83	0.95	0.66	0.77	0.88	1.00	0.70	0.82	0.93	1.06
		PI	6.28	6.29	6.29	6.30	6.65	6.66	6.67	6.68	7.05	7.06	7.07	7.08	7.48	7.49	7.49	7.50

Manufacturer reserves the right to change, at any time, specifications and designs without notice and without obligations.

NON-DUCTED COOLING PERFORMANCE 18K (Sheet 4 of 4)

AIRFLOW (CFM)	OUTDOOR DB (°F)	ID WB (°F)	60.8				64.4				66.2				71.6			
		ID DB (°F)	73.4	77.0	80.6	84.2	73.4	77.0	80.6	84.2	73.4	77.0	80.0	84.20	73.4	77.0	80.6	84.2
540	5	TC	19962	19989	20012	20039	21162	21187	21212	21238	22427	22456	22485	22510	23779	23805	23834	23864
		S/T	0.49	0.57	0.65	0.74	0.52	0.61	0.69	0.79	0.55	0.65	0.73	0.84	0.58	0.68	0.78	0.89
		PI	1.76	1.76	1.76	1.77	1.87	1.87	1.87	1.87	1.98	1.98	1.98	1.98	2.10	2.10	2.10	2.10
	14	TC	20843	20872	20895	20923	22096	22122	22149	22175	23417	23447	23478	23504	24828	24855	24886	24917
		S/T	0.49	0.58	0.66	0.75	0.52	0.61	0.70	0.79	0.55	0.65	0.74	0.84	0.59	0.69	0.78	0.89
		PI	1.70	1.70	1.71	1.71	1.80	1.81	1.81	1.81	1.91	1.91	1.92	1.92	2.03	2.03	2.03	2.03
	17	TC	21137	21166	21189	21218	22408	22434	22461	22487	23747	23777	23808	23835	25178	25206	25237	25268
		S/T	0.49	0.58	0.66	0.75	0.52	0.61	0.70	0.79	0.55	0.65	0.74	0.84	0.59	0.69	0.78	0.89
		PI	1.68	1.68	1.69	1.69	1.78	1.79	1.79	1.79	1.89	1.89	1.89	1.90	2.00	2.01	2.01	2.01
	23	TC	21219	21248	21271	21300	22494	22521	22548	22574	23838	23869	23901	23927	25276	25303	25335	25366
		S/T	0.49	0.58	0.66	0.75	0.52	0.61	0.70	0.80	0.56	0.65	0.74	0.84	0.59	0.69	0.79	0.90
		PI	1.73	1.73	1.73	1.73	1.83	1.83	1.83	1.84	1.94	1.94	1.94	1.95	2.06	2.06	2.06	2.06
	32	TC	21342	21370	21394	21423	22624	22651	22678	22705	23976	24007	24039	24066	25422	25449	25481	25513
		S/T	0.50	0.58	0.66	0.76	0.53	0.62	0.70	0.80	0.56	0.66	0.74	0.85	0.59	0.69	0.79	0.90
		PI	1.79	1.79	1.80	1.80	1.90	1.90	1.90	1.91	2.01	2.02	2.02	2.02	2.13	2.14	2.14	2.14
	41	TC	21498	21527	21551	21580	22790	22817	22844	22871	24152	24183	24214	24241	25607	25635	25667	25699
		S/T	0.50	0.59	0.67	0.76	0.53	0.62	0.71	0.80	0.56	0.66	0.75	0.85	0.59	0.70	0.79	0.90
		PI	1.72	1.72	1.72	1.73	1.82	1.83	1.83	1.83	1.93	1.94	1.94	1.94	2.05	2.05	2.05	2.06
	47	TC	21613	21642	21666	21695	22912	22939	22966	22993	24281	24312	24344	24371	25744	25772	25805	25837
		S/T	0.50	0.59	0.67	0.76	0.53	0.62	0.71	0.81	0.56	0.66	0.75	0.85	0.60	0.70	0.79	0.91
		PI	1.63	1.63	1.63	1.63	1.73	1.73	1.73	1.73	1.83	1.83	1.83	1.84	1.94	1.94	1.94	1.95
	50	TC	21507	21536	21560	21589	22800	22827	22854	22881	24162	24194	24225	24252	25619	25647	25679	25711
		S/T	0.50	0.59	0.67	0.76	0.53	0.62	0.71	0.81	0.56	0.66	0.75	0.86	0.60	0.70	0.80	0.91
		PI	1.63	1.63	1.63	1.63	1.72	1.73	1.73	1.73	1.83	1.83	1.83	1.83	1.94	1.94	1.94	1.94
	59	TC	21191	21219	21243	21272	22464	22491	22518	22544	23807	23838	23869	23895	25242	25269	25301	25332
		S/T	0.50	0.59	0.67	0.77	0.53	0.63	0.71	0.81	0.57	0.66	0.76	0.86	0.60	0.70	0.80	0.91
		PI	1.62	1.63	1.63	1.63	1.72	1.72	1.72	1.73	1.82	1.83	1.83	1.83	1.93	1.94	1.94	1.94
	68	TC	20874	20902	20926	20954	22129	22155	22181	22208	23451	23482	23512	23538	24865	24892	24923	24954
		S/T	0.51	0.59	0.68	0.77	0.54	0.63	0.72	0.82	0.57	0.67	0.76	0.87	0.60	0.71	0.81	0.92
		PI	1.62	1.62	1.62	1.63	1.72	1.72	1.72	1.72	1.82	1.82	1.82	1.83	1.93	1.93	1.93	1.94
	77	TC	20558	20585	20608	20636	21793	21819	21845	21871	23096	23126	23156	23181	24488	24514	24545	24576
		S/T	0.52	0.61	0.69	0.79	0.55	0.65	0.74	0.84	0.58	0.69	0.78	0.89	0.62	0.73	0.83	0.94
		PI	1.62	1.62	1.62	1.62	1.71	1.71	1.72	1.72	1.81	1.82	1.82	1.82	1.92	1.93	1.93	1.93
	86	TC	19846	19872	19895	19921	21038	21063	21088	21113	22296	22325	22354	22379	23640	23665	23695	23724
		S/T	0.53	0.62	0.70	0.80	0.56	0.66	0.75	0.85	0.59	0.70	0.79	0.90	0.63	0.74	0.84	0.95
		PI	1.85	1.86	1.86	1.86	1.96	1.97	1.97	1.97	2.08	2.08	2.09	2.09	2.21	2.21	2.21	2.22
	95	TC	19438	19464	19486	19512	20606	20631	20655	20680	21838	21866	21894	21919	23154	23179	23208	23237
		S/T	0.54	0.63	0.72	0.82	0.57	0.67	0.76	0.87	0.61	0.71	0.81	0.92	0.64	0.76	0.86	0.98
		PI	1.90	1.91	1.91	1.91	2.02	2.02	2.02	2.03	2.14	2.14	2.15	2.15	2.27	2.27	2.27	2.28
	104	TC	14356	14375	14391	14410	15218	15236	15255	15273	16128	16149	16170	16188	17100	17119	17140	17161
		S/T	0.57	0.67	0.76	0.86	0.60	0.71	0.80	0.91	0.64	0.75	0.85	0.97	0.68	0.79	0.90	1.03
		PI	3.39	3.39	3.40	3.40	3.59	3.60	3.60	3.61	3.81	3.81	3.82	3.82	4.04	4.04	4.05	4.05
	114.8	TC	8257	8268	8277	8288	8753	8764	8774	8784	9276	9288	9300	9311	9836	9846	9858	9871
		S/T	0.57	0.67	0.77	0.87	0.61	0.71	0.81	0.93	0.65	0.76	0.86	0.98	0.68	0.80	0.91	1.04
		PI	5.17	5.18	5.18	5.19	5.48	5.49	5.49	5.50	5.81	5.81	5.82	5.83	6.16	6.16	6.17	6.18
	122	TC	4191	4197	4202	4207	4443	4448	4454	4459	4709	4715	4721	4726	4992	4998	5004	5010
		S/T	0.59	0.70	0.79	0.90	0.63	0.74	0.84	0.96	0.67	0.78	0.89	1.02	0.71	0.83	0.94	1.08
		PI	6.36	6.36	6.37	6.38	6.74	6.75	6.75	6.76	7.14	7.15	7.16	7.17	7.57	7.58	7.59	7.60

NOTE: Data highlighted in gray is extrapolated data and not actual test data. At 77°F outdoor conditions sweat protection activates causing a decrease in total capacity.

LEGEND

TC - Total Net Capacity (Btu/hour)
S/T: Sensible Cooling Capacity Ratio
PI: Power Input (kW)
Extrapolated Data

COOLING PERFORMANCE NON-DUCTED

COOLING PERFORMANCE 27K

NON-DUCTED COOLING PERFORMANCE 27K (Sheet 1 of 4)

AIRFLOW (CFM)	OUTDOOR DB (°F)	ID WB (°F)	60.8				64.4				66.2				71.6			
		ID DB (°F)	73.4	77.0	80.6	84.2	73.4	77.0	80.6	84.2	73.4	77.0	80.0	84.20	73.4	77.0	80.6	84.2
480	5	TC	16196	16218	16236	16258	17169	17189	17210	17230	18195	18219	18242	18263	19292	19313	19337	19361
		S/T	0.28	0.33	0.38	0.43	0.30	0.35	0.40	0.46	0.32	0.37	0.42	0.48	0.34	0.40	0.45	0.51
		PI	1.22	1.22	1.22	1.23	1.29	1.30	1.30	1.30	1.37	1.37	1.38	1.38	1.45	1.46	1.46	1.46
	14	TC	16215	16237	16255	16277	17190	17210	17231	17251	18217	18241	18265	18285	19315	19336	19360	19385
		S/T	0.28	0.33	0.38	0.43	0.30	0.35	0.40	0.46	0.32	0.37	0.43	0.49	0.34	0.40	0.45	0.51
		PI	1.21	1.21	1.21	1.22	1.28	1.29	1.29	1.29	1.36	1.36	1.36	1.37	1.44	1.44	1.45	1.45
	17	TC	16222	16244	16262	16284	17197	17217	17238	17258	18225	18248	18272	18292	19323	19344	19368	19392
		S/T	0.28	0.33	0.38	0.43	0.30	0.35	0.40	0.46	0.32	0.38	0.43	0.49	0.34	0.40	0.45	0.52
		PI	1.21	1.21	1.21	1.21	1.28	1.28	1.28	1.28	1.36	1.36	1.36	1.36	1.44	1.44	1.44	1.44
	23	TC	16687	16709	16728	16751	17690	17711	17732	17753	18747	18771	18796	18817	19877	19899	19923	19948
		S/T	0.29	0.34	0.38	0.43	0.30	0.36	0.40	0.46	0.32	0.38	0.43	0.49	0.34	0.40	0.45	0.52
		PI	1.16	1.17	1.17	1.17	1.23	1.23	1.24	1.24	1.31	1.31	1.31	1.31	1.39	1.39	1.39	1.39
	32	TC	17384	17407	17427	17450	18429	18451	18473	18494	19530	19555	19581	19603	20707	20730	20756	20782
		S/T	0.29	0.34	0.38	0.44	0.30	0.36	0.41	0.46	0.32	0.38	0.43	0.49	0.34	0.40	0.46	0.52
		PI	1.10	1.10	1.10	1.10	1.16	1.16	1.17	1.17	1.23	1.23	1.24	1.24	1.31	1.31	1.31	1.31
	41	TC	18138	18162	18183	18207	19228	19251	19274	19296	20377	20403	20430	20453	21605	21629	21656	21683
		S/T	0.29	0.34	0.38	0.44	0.31	0.36	0.41	0.47	0.32	0.38	0.43	0.49	0.34	0.40	0.46	0.52
		PI	1.21	1.21	1.21	1.21	1.28	1.28	1.28	1.28	1.36	1.36	1.36	1.36	1.44	1.44	1.44	1.44
	47	TC	18659	18684	18705	18730	19781	19804	19828	19851	20963	20990	21017	21041	22226	22251	22278	22306
		S/T	0.29	0.34	0.39	0.44	0.31	0.36	0.41	0.47	0.33	0.38	0.43	0.49	0.34	0.40	0.46	0.52
		PI	1.34	1.34	1.34	1.34	1.42	1.42	1.42	1.42	1.50	1.51	1.51	1.51	1.59	1.60	1.60	1.60
	50	TC	18955	18981	19002	19028	20095	20118	20142	20166	21295	21323	21351	21375	22579	22604	22632	22660
		S/T	0.29	0.34	0.39	0.44	0.31	0.36	0.41	0.47	0.33	0.38	0.43	0.50	0.35	0.41	0.46	0.53
		PI	1.36	1.36	1.37	1.37	1.44	1.45	1.45	1.45	1.53	1.53	1.54	1.54	1.62	1.63	1.63	1.63
	59	TC	19844	19870	19893	19920	21036	21061	21086	21111	22293	22322	22351	22376	23637	23663	23693	23722
		S/T	0.29	0.34	0.39	0.44	0.31	0.36	0.41	0.47	0.33	0.38	0.44	0.50	0.35	0.41	0.46	0.53
		PI	1.44	1.44	1.44	1.44	1.52	1.52	1.53	1.53	1.61	1.62	1.62	1.62	1.71	1.71	1.72	1.72
	68	TC	20732	20760	20783	20811	21978	22004	22030	22056	23291	23322	23352	23378	24696	24722	24753	24784
		S/T	0.29	0.34	0.39	0.45	0.31	0.36	0.41	0.47	0.33	0.39	0.44	0.50	0.35	0.41	0.47	0.53
		PI	1.51	1.51	1.51	1.52	1.60	1.60	1.60	1.61	1.70	1.70	1.70	1.70	1.80	1.80	1.80	1.81
	77	TC	21620	21650	21674	21703	22920	22947	22974	23002	24290	24321	24353	24380	25754	25782	25814	25846
		S/T	0.30	0.35	0.40	0.46	0.32	0.37	0.43	0.48	0.34	0.40	0.45	0.51	0.36	0.42	0.48	0.54
		PI	1.58	1.59	1.59	1.59	1.68	1.68	1.68	1.69	1.78	1.78	1.78	1.79	1.89	1.89	1.89	1.89
	86	TC	17432	17455	17475	17499	18480	18502	18524	18546	19584	19609	19635	19657	20765	20787	20813	20839
		S/T	0.30	0.36	0.41	0.46	0.32	0.38	0.43	0.49	0.34	0.40	0.46	0.52	0.36	0.43	0.48	0.55
		PI	1.69	1.69	1.69	1.70	1.79	1.79	1.80	1.80	1.90	1.90	1.90	1.91	2.01	2.01	2.02	2.02
	95	TC	17149	17172	17191	17214	18179	18201	18223	18244	19266	19291	19316	19338	20427	20449	20475	20500
		S/T	0.31	0.37	0.42	0.48	0.33	0.39	0.44	0.50	0.35	0.41	0.47	0.53	0.37	0.44	0.50	0.57
		PI	1.77	1.77	1.77	1.78	1.88	1.88	1.88	1.88	1.99	1.99	1.99	2.00	2.11	2.11	2.11	2.12
	104	TC	14054	14073	14089	14108	14899	14916	14934	14952	15789	15810	15830	15848	16741	16759	16780	16801
		S/T	0.33	0.39	0.44	0.50	0.35	0.41	0.46	0.53	0.37	0.43	0.49	0.56	0.39	0.46	0.52	0.59
		PI	3.62	3.63	3.63	3.64	3.84	3.85	3.85	3.85	4.07	4.08	4.08	4.09	4.32	4.32	4.33	4.33
	114.8	TC	10340	10354	10366	10380	10962	10975	10988	11001	11617	11632	11647	11660	12317	12331	12346	12361
		S/T	0.33	0.39	0.44	0.50	0.35	0.41	0.47	0.54	0.37	0.44	0.50	0.57	0.40	0.46	0.53	0.60
		PI	5.85	5.85	5.86	5.87	6.20	6.20	6.21	6.22	6.57	6.58	6.58	6.59	6.96	6.97	6.98	6.99
	122	TC	7865	7875	7884	7895	8337	8347	8357	8367	8835	8847	8858	8868	9368	9378	9390	9402
		S/T	0.34	0.40	0.46	0.52	0.36	0.43	0.49	0.55	0.39	0.45	0.52	0.59	0.41	0.48	0.55	0.62
		PI	7.33	7.34	7.35	7.36	7.77	7.78	7.79	7.80	8.23	8.24	8.25	8.26	8.73	8.74	8.75	8.76

Manufacturer reserves the right to change, at any time, specifications and designs without notice and without obligations.

NON-DUCTED COOLING PERFORMANCE 27K (Sheet 2 of 4)

AIRFLOW (CFM)	OUTDOOR DB (°F)	ID WB (°F)	60.8				64.4				66.2				71.6			
		ID DB (°F)	73.4	77.0	80.6	84.2	73.4	77.0	80.6	84.2	73.4	77.0	80.0	84.20	73.4	77.0	80.6	84.2
600	5	TC	20044	20071	20094	20121	21249	21274	21299	21325	22519	22548	22577	22603	23876	23902	23932	23962
		S/T	0.37	0.43	0.49	0.56	0.39	0.46	0.52	0.60	0.42	0.49	0.55	0.63	0.44	0.52	0.59	0.67
		PI	1.59	1.59	1.59	1.59	1.68	1.69	1.69	1.69	1.78	1.79	1.79	1.79	1.89	1.89	1.90	1.90
	14	TC	20069	20096	20118	20145	21275	21300	21325	21351	22546	22575	22605	22630	23905	23931	23961	23991
		S/T	0.37	0.44	0.50	0.56	0.39	0.46	0.53	0.60	0.42	0.49	0.56	0.63	0.44	0.52	0.59	0.67
		PI	1.57	1.58	1.58	1.58	1.67	1.67	1.67	1.68	1.77	1.77	1.77	1.78	1.88	1.88	1.88	1.88
	17	TC	20077	20104	20126	20153	21283	21309	21334	21359	22555	22584	22614	22639	23915	23941	23971	24001
		S/T	0.37	0.44	0.50	0.57	0.39	0.46	0.53	0.60	0.42	0.49	0.56	0.64	0.44	0.52	0.59	0.67
		PI	1.57	1.57	1.57	1.58	1.66	1.67	1.67	1.67	1.76	1.77	1.77	1.77	1.87	1.87	1.88	1.88
	23	TC	20652	20680	20703	20731	21893	21919	21945	21971	23201	23232	23262	23288	24600	24627	24658	24688
		S/T	0.37	0.44	0.50	0.57	0.40	0.46	0.53	0.60	0.42	0.49	0.56	0.64	0.44	0.52	0.59	0.68
		PI	1.51	1.52	1.52	1.52	1.60	1.61	1.61	1.61	1.70	1.70	1.70	1.71	1.80	1.80	1.81	1.81
	32	TC	21515	21544	21568	21597	22808	22835	22862	22889	24171	24202	24234	24261	25628	25656	25688	25720
		S/T	0.38	0.44	0.50	0.57	0.40	0.47	0.53	0.60	0.42	0.49	0.56	0.64	0.45	0.52	0.60	0.68
		PI	1.43	1.43	1.43	1.43	1.51	1.51	1.52	1.52	1.60	1.61	1.61	1.61	1.70	1.70	1.70	1.71
	41	TC	22448	22478	22503	22534	23797	23825	23853	23882	25219	25252	25285	25313	26739	26768	26802	26835
		S/T	0.38	0.44	0.50	0.57	0.40	0.47	0.53	0.61	0.42	0.50	0.57	0.64	0.45	0.53	0.60	0.68
		PI	1.57	1.57	1.57	1.58	1.66	1.67	1.67	1.67	1.76	1.77	1.77	1.77	1.87	1.87	1.87	1.88
	47	TC	23093	23124	23150	23181	24481	24510	24539	24568	25944	25978	26011	26040	27508	27538	27572	27606
		S/T	0.38	0.44	0.50	0.57	0.40	0.47	0.53	0.61	0.42	0.50	0.57	0.65	0.45	0.53	0.60	0.68
		PI	1.74	1.74	1.74	1.75	1.85	1.85	1.85	1.85	1.96	1.96	1.96	1.96	2.07	2.08	2.08	2.08
	50	TC	23460	23491	23517	23549	24870	24899	24929	24958	26356	26390	26424	26454	27945	27975	28010	28045
		S/T	0.38	0.44	0.51	0.58	0.40	0.47	0.54	0.61	0.43	0.50	0.57	0.65	0.45	0.53	0.60	0.69
		PI	1.77	1.77	1.78	1.78	1.88	1.88	1.88	1.89	1.99	1.99	2.00	2.00	2.11	2.11	2.12	2.12
	59	TC	24559	24592	24620	24653	26035	26066	26097	26128	27591	27627	27663	27694	29254	29286	29322	29359
		S/T	0.38	0.45	0.51	0.58	0.40	0.47	0.54	0.61	0.43	0.50	0.57	0.65	0.45	0.53	0.61	0.69
		PI	1.87	1.87	1.87	1.88	1.98	1.98	1.99	1.99	2.10	2.10	2.10	2.11	2.23	2.23	2.23	2.23
	68	TC	25659	25693	25722	25757	27201	27233	27265	27298	28826	28864	28901	28933	30564	30597	30635	30673
		S/T	0.38	0.45	0.51	0.58	0.41	0.48	0.54	0.62	0.43	0.51	0.57	0.65	0.46	0.54	0.61	0.69
		PI	1.96	1.97	1.97	1.97	2.08	2.08	2.09	2.09	2.21	2.21	2.21	2.21	2.34	2.34	2.35	2.35
	77	TC	26758	26794	26824	26860	28366	28400	28433	28467	30061	30100	30139	30173	31874	31908	31948	31988
		S/T	0.39	0.46	0.52	0.60	0.42	0.49	0.56	0.63	0.44	0.52	0.59	0.67	0.47	0.55	0.62	0.71
		PI	2.06	2.06	2.07	2.07	2.18	2.19	2.19	2.19	2.31	2.32	2.32	2.32	2.45	2.46	2.46	2.46
	86	TC	21574	21603	21628	21657	22871	22898	22925	22952	24238	24269	24301	24328	25699	25727	25759	25791
		S/T	0.40	0.47	0.53	0.61	0.42	0.50	0.56	0.64	0.45	0.53	0.60	0.68	0.47	0.56	0.63	0.72
		PI	2.20	2.20	2.20	2.21	2.33	2.33	2.33	2.34	2.47	2.47	2.47	2.48	2.62	2.62	2.62	2.63
	95	TC	21224	21252	21276	21305	22499	22526	22553	22579	23844	23875	23906	23933	25281	25309	25340	25372
		S/T	0.41	0.48	0.54	0.62	0.43	0.51	0.58	0.66	0.46	0.54	0.61	0.70	0.49	0.57	0.65	0.74
		PI	2.30	2.31	2.31	2.31	2.44	2.44	2.45	2.45	2.59	2.59	2.59	2.60	2.74	2.75	2.75	2.75
	104	TC	17394	17417	17437	17460	18439	18461	18483	18505	19541	19566	19592	19614	20719	20741	20767	20793
		S/T	0.43	0.50	0.57	0.65	0.45	0.53	0.61	0.69	0.48	0.57	0.64	0.73	0.51	0.60	0.68	0.78
		PI	4.71	4.72	4.72	4.73	4.99	5.00	5.01	5.01	5.29	5.30	5.31	5.31	5.61	5.62	5.63	5.63
	114.8	TC	12797	12815	12829	12846	13567	13583	13599	13615	14377	14396	14415	14431	15244	15261	15280	15299
		S/T	0.43	0.51	0.58	0.66	0.46	0.54	0.61	0.70	0.49	0.57	0.65	0.74	0.52	0.61	0.69	0.79
		PI	7.60	7.61	7.62	7.63	8.06	8.07	8.08	8.09	8.54	8.55	8.56	8.57	9.06	9.07	9.08	9.09
	122	TC	9733	9746	9757	9771	10318	10331	10343	10355	10935	10949	10963	10976	11594	11607	11621	11636
		S/T	0.45	0.53	0.60	0.68	0.48	0.56	0.64	0.72	0.51	0.59	0.67	0.77	0.54	0.63	0.71	0.81
		PI	9.53	9.54	9.55	9.57	10.10	10.11	10.13	10.14	10.71	10.72	10.73	10.75	11.35	11.36	11.38	11.39

Manufacturer reserves the right to change, at any time, specifications and designs without notice and without obligations.

NON-DUCTED COOLING PERFORMANCE 27K (Sheet 3 of 4)

AIRFLOW (CFM)	OUTDOOR DB (°F)	ID WB (°F)	60.8				64.4				66.2				71.6			
		ID DB (°F)	73.4	77.0	80.6	84.2	73.4	77.0	80.6	84.2	73.4	77.0	80.0	84.20	73.4	77.0	80.6	84.2
792	5	TC	26196	26232	26261	26297	27771	27804	27837	27870	29430	29469	29507	29540	31205	31239	31277	31316
		S/T	0.48	0.57	0.64	0.73	0.51	0.60	0.68	0.78	0.54	0.64	0.72	0.83	0.58	0.68	0.77	0.88
		PI	2.08	2.08	2.08	2.08	2.20	2.20	2.21	2.21	2.33	2.33	2.34	2.34	2.47	2.48	2.48	2.48
	14	TC	26228	26264	26293	26328	27805	27838	27871	27904	29466	29504	29543	29576	31242	31276	31315	31354
		S/T	0.49	0.57	0.65	0.74	0.51	0.60	0.69	0.78	0.55	0.64	0.73	0.83	0.58	0.68	0.77	0.88
		PI	2.06	2.06	2.06	2.07	2.18	2.18	2.19	2.19	2.31	2.32	2.32	2.32	2.45	2.45	2.46	2.46
	17	TC	26239	26274	26304	26339	27816	27849	27882	27915	29478	29516	29555	29588	31255	31289	31328	31367
		S/T	0.49	0.57	0.65	0.74	0.52	0.61	0.69	0.78	0.55	0.64	0.73	0.83	0.58	0.68	0.77	0.88
		PI	2.05	2.06	2.06	2.06	2.18	2.18	2.18	2.18	2.31	2.31	2.31	2.31	2.45	2.45	2.45	2.45
	23	TC	26991	27027	27057	27094	28613	28647	28681	28715	30323	30362	30402	30436	32151	32186	32226	32266
		S/T	0.49	0.57	0.65	0.74	0.52	0.61	0.69	0.79	0.55	0.64	0.73	0.83	0.58	0.68	0.78	0.88
		PI	1.98	1.98	1.98	1.99	2.10	2.10	2.10	2.10	2.22	2.22	2.23	2.23	2.36	2.36	2.36	2.36
	32	TC	28118	28156	28188	28226	29808	29844	29879	29915	31590	31631	31672	31707	33494	33530	33572	33614
		S/T	0.49	0.58	0.65	0.75	0.52	0.61	0.69	0.79	0.55	0.65	0.74	0.84	0.58	0.69	0.78	0.89
		PI	1.87	1.87	1.87	1.87	1.98	1.98	1.98	1.98	2.10	2.10	2.10	2.10	2.22	2.22	2.23	2.23
	41	TC	29338	29377	29410	29450	31101	31138	31175	31212	32959	33002	33045	33082	34946	34984	35028	35072
		S/T	0.49	0.58	0.66	0.75	0.52	0.61	0.70	0.79	0.55	0.65	0.74	0.84	0.59	0.69	0.78	0.89
		PI	2.05	2.05	2.06	2.06	2.17	2.18	2.18	2.18	2.30	2.31	2.31	2.31	2.44	2.45	2.45	2.45
	47	TC	30181	30222	30256	30296	31995	32033	32071	32109	33907	33951	33995	34033	35951	35990	36035	36080
		S/T	0.49	0.58	0.66	0.75	0.52	0.61	0.70	0.80	0.56	0.65	0.74	0.84	0.59	0.69	0.78	0.89
		PI	2.27	2.28	2.28	2.28	2.41	2.41	2.42	2.42	2.56	2.56	2.56	2.57	2.71	2.71	2.72	2.72
	50	TC	30660	30701	30736	30777	32503	32541	32580	32619	34445	34490	34535	34573	36522	36561	36607	36652
		S/T	0.50	0.58	0.66	0.75	0.53	0.62	0.70	0.80	0.56	0.65	0.74	0.85	0.59	0.69	0.79	0.90
		PI	2.32	2.32	2.32	2.33	2.46	2.46	2.46	2.46	2.60	2.61	2.61	2.61	2.76	2.76	2.77	2.77
	59	TC	32097	32140	32176	32220	34026	34066	34107	34147	36059	36106	36153	36194	38233	38275	38322	38370
		S/T	0.50	0.58	0.66	0.76	0.53	0.62	0.70	0.80	0.56	0.66	0.75	0.85	0.59	0.70	0.79	0.90
		PI	2.44	2.45	2.45	2.45	2.59	2.59	2.59	2.60	2.74	2.75	2.75	2.75	2.91	2.91	2.92	2.92
	68	TC	33534	33579	33617	33662	35549	35591	35634	35676	37674	37723	37772	37814	39945	39988	40038	40088
		S/T	0.50	0.59	0.67	0.76	0.53	0.62	0.71	0.81	0.56	0.66	0.75	0.86	0.60	0.70	0.80	0.91
		PI	2.57	2.57	2.57	2.58	2.72	2.72	2.73	2.73	2.88	2.89	2.89	2.89	3.06	3.06	3.06	3.07
	77	TC	34971	35018	35057	35104	37073	37117	37161	37205	39288	39339	39390	39434	41656	41702	41754	41806
		S/T	0.51	0.60	0.69	0.78	0.54	0.64	0.73	0.83	0.58	0.68	0.77	0.88	0.61	0.72	0.82	0.93
		PI	2.69	2.70	2.70	2.70	2.85	2.86	2.86	2.86	3.02	3.03	3.03	3.04	3.21	3.21	3.21	3.22
	86	TC	28196	28234	28266	28304	29891	29926	29962	29997	31677	31718	31759	31795	33587	33623	33665	33707
		S/T	0.52	0.61	0.69	0.79	0.55	0.65	0.74	0.84	0.59	0.69	0.78	0.89	0.62	0.73	0.83	0.94
		PI	2.87	2.88	2.88	2.88	3.04	3.05	3.05	3.05	3.23	3.23	3.23	3.24	3.42	3.42	3.43	3.43
	95	TC	27738	27775	27806	27844	29405	29440	29475	29510	31162	31203	31243	31278	33041	33077	33118	33159
		S/T	0.53	0.63	0.71	0.81	0.57	0.66	0.75	0.86	0.60	0.70	0.80	0.91	0.64	0.75	0.85	0.97
		PI	3.01	3.01	3.02	3.02	3.19	3.19	3.20	3.20	3.38	3.38	3.39	3.39	3.58	3.59	3.59	3.60
	104	TC	22732	22763	22788	22819	24099	24127	24156	24184	25539	25572	25605	25634	27078	27108	27141	27175
		S/T	0.56	0.66	0.75	0.85	0.59	0.70	0.79	0.90	0.63	0.74	0.84	0.96	0.67	0.78	0.89	1.02
		PI	6.16	6.17	6.17	6.18	6.53	6.54	6.54	6.55	6.92	6.93	6.94	6.94	7.33	7.34	7.35	7.36
	114.8	TC	16725	16748	16767	16789	17731	17752	17773	17794	18790	18815	18839	18860	19923	19945	19969	19994
		S/T	0.57	0.67	0.76	0.86	0.60	0.71	0.80	0.91	0.64	0.75	0.85	0.97	0.68	0.79	0.90	1.03
		PI	9.94	9.95	9.96	9.97	10.53	10.55	10.56	10.57	11.16	11.18	11.19	11.20	11.84	11.85	11.86	11.88
	122	TC	12721	12738	12752	12769	13485	13501	13517	13533	14291	14310	14328	14344	15153	15169	15188	15207
		S/T	0.59	0.69	0.78	0.89	0.62	0.73	0.83	0.95	0.66	0.77	0.88	1.00	0.70	0.82	0.93	1.06
		PI	12.45	12.47	12.49	12.50	13.20	13.22	13.23	13.25	13.99	14.01	14.03	14.04	14.84	14.85	14.87	14.89

Manufacturer reserves the right to change, at any time, specifications and designs without notice and without obligations.

NON-DUCTED COOLING PERFORMANCE 27K (Sheet 4 of 4)

AIRFLOW (CFM)	OUTDOOR DB (°F)	ID WB (°F)	60.8				64.4				66.2				71.6			
		ID DB (°F)	73.4	77.0	80.6	84.2	73.4	77.0	80.6	84.2	73.4	77.0	80.0	84.20	73.4	77.0	80.6	84.2
810	5	TC	26527	26562	26592	26628	28121	28154	28188	28221	29801	29840	29879	29912	31598	31632	31672	31711
		S/T	0.49	0.57	0.65	0.74	0.52	0.61	0.69	0.79	0.55	0.65	0.73	0.84	0.58	0.68	0.78	0.89
		PI	2.10	2.10	2.11	2.11	2.23	2.23	2.23	2.24	2.36	2.36	2.37	2.37	2.50	2.51	2.51	2.51
	14	TC	26559	26594	26624	26660	28155	28188	28222	28255	29837	29876	29915	29948	31636	31671	31710	31749
		S/T	0.49	0.58	0.66	0.75	0.52	0.61	0.70	0.79	0.55	0.65	0.74	0.84	0.59	0.69	0.78	0.89
		PI	2.08	2.09	2.09	2.09	2.21	2.21	2.21	2.22	2.34	2.34	2.35	2.35	2.48	2.49	2.49	2.49
	17	TC	26569	26605	26635	26671	28166	28200	28233	28267	29850	29888	29927	29961	31649	31683	31723	31762
		S/T	0.49	0.58	0.66	0.75	0.52	0.61	0.70	0.79	0.55	0.65	0.74	0.84	0.59	0.69	0.78	0.89
		PI	2.08	2.08	2.08	2.09	2.20	2.21	2.21	2.21	2.34	2.34	2.34	2.34	2.48	2.48	2.48	2.48
	23	TC	27331	27368	27398	27435	28973	29008	29042	29077	30705	30745	30785	30819	32556	32591	32632	32672
		S/T	0.49	0.58	0.66	0.75	0.52	0.61	0.70	0.80	0.56	0.65	0.74	0.84	0.59	0.69	0.79	0.90
		PI	2.00	2.01	2.01	2.01	2.12	2.13	2.13	2.13	2.25	2.25	2.26	2.26	2.39	2.39	2.39	2.39
	32	TC	28473	28511	28543	28582	30184	30220	30256	30292	31988	32029	32071	32107	33916	33953	33995	34038
		S/T	0.50	0.58	0.66	0.76	0.53	0.62	0.70	0.80	0.56	0.66	0.74	0.85	0.59	0.69	0.79	0.90
		PI	1.89	1.89	1.89	1.90	2.00	2.00	2.01	2.01	2.12	2.12	2.13	2.13	2.25	2.25	2.26	2.26
	41	TC	29707	29747	29781	29821	31493	31530	31568	31605	33375	33418	33462	33499	35387	35425	35469	35514
		S/T	0.50	0.59	0.67	0.76	0.53	0.62	0.71	0.80	0.56	0.66	0.75	0.85	0.59	0.70	0.79	0.90
		PI	2.08	2.08	2.08	2.09	2.20	2.20	2.21	2.21	2.33	2.34	2.34	2.34	2.47	2.48	2.48	2.48
	47	TC	30561	30602	30637	30678	32398	32437	32475	32514	34334	34379	34424	34462	36404	36444	36489	36534
		S/T	0.50	0.59	0.67	0.76	0.53	0.62	0.71	0.81	0.56	0.66	0.75	0.85	0.60	0.70	0.79	0.91
		PI	2.30	2.31	2.31	2.31	2.44	2.44	2.45	2.45	2.59	2.59	2.59	2.60	2.74	2.75	2.75	2.75
	50	TC	31046	31088	31123	31165	32912	32951	32990	33030	34879	34924	34970	35009	36982	37022	37068	37114
		S/T	0.50	0.59	0.67	0.76	0.53	0.62	0.71	0.81	0.56	0.66	0.75	0.86	0.60	0.70	0.80	0.91
		PI	2.35	2.35	2.35	2.35	2.49	2.49	2.49	2.50	2.64	2.64	2.64	2.65	2.79	2.80	2.80	2.80
	59	TC	32501	32545	32582	32626	34455	34496	34537	34578	36514	36561	36609	36650	38715	38757	38805	38854
		S/T	0.50	0.59	0.67	0.77	0.53	0.63	0.71	0.81	0.57	0.66	0.76	0.86	0.60	0.70	0.80	0.91
		PI	2.47	2.48	2.48	2.48	2.62	2.62	2.63	2.63	2.78	2.78	2.78	2.79	2.95	2.95	2.95	2.96
	68	TC	33956	34002	34040	34086	35997	36040	36083	36126	38148	38198	38248	38290	40448	40492	40543	40593
		S/T	0.51	0.59	0.68	0.77	0.54	0.63	0.72	0.82	0.57	0.67	0.76	0.87	0.60	0.71	0.81	0.92
		PI	2.60	2.60	2.61	2.61	2.76	2.76	2.76	2.77	2.92	2.92	2.93	2.93	3.10	3.10	3.10	3.11
	77	TC	35412	35459	35499	35547	37540	37584	37629	37674	39783	39835	39887	39931	42181	42227	42280	42332
		S/T	0.52	0.61	0.69	0.79	0.55	0.65	0.74	0.84	0.58	0.69	0.78	0.89	0.62	0.73	0.83	0.94
		PI	2.73	2.73	2.73	2.74	2.89	2.89	2.90	2.90	3.06	3.07	3.07	3.07	3.25	3.25	3.25	3.26
	86	TC	28551	28590	28622	28660	30267	30303	30339	30375	32076	32118	32160	32195	34010	34047	34089	34132
		S/T	0.53	0.62	0.70	0.80	0.56	0.66	0.75	0.85	0.59	0.70	0.79	0.90	0.63	0.74	0.84	0.95
		PI	2.91	2.91	2.91	2.92	3.08	3.09	3.09	3.09	3.27	3.27	3.28	3.28	3.46	3.47	3.47	3.48
	95	TC	28088	28125	28157	28195	29776	29811	29846	29882	31555	31596	31637	31672	33457	33494	33535	33577
		S/T	0.54	0.63	0.72	0.82	0.57	0.67	0.76	0.87	0.61	0.71	0.81	0.92	0.64	0.76	0.86	0.98
		PI	3.05	3.05	3.05	3.06	3.23	3.23	3.24	3.24	3.42	3.43	3.43	3.44	3.63	3.63	3.64	3.64
	104	TC	23019	23050	23076	23107	24402	24431	24460	24489	25860	25894	25928	25957	27419	27449	27483	27518
		S/T	0.57	0.67	0.76	0.86	0.60	0.71	0.80	0.91	0.64	0.75	0.85	0.97	0.68	0.79	0.90	1.03
		PI	6.24	6.24	6.25	6.26	6.61	6.62	6.63	6.63	7.00	7.01	7.02	7.03	7.43	7.44	7.44	7.45
	114.8	TC	16936	16959	16978	17001	17954	17975	17997	18018	19027	19052	19076	19098	20174	20196	20221	20246
		S/T	0.57	0.67	0.77	0.87	0.61	0.71	0.81	0.93	0.65	0.76	0.86	0.98	0.68	0.80	0.91	1.04
		PI	10.06	10.07	10.09	10.10	10.67	10.68	10.69	10.70	11.30	11.32	11.33	11.35	11.98	12.00	12.01	12.03
	122	TC	12881	12898	12913	12930	13655	13671	13688	13704	14471	14490	14509	14525	15344	15360	15379	15399
		S/T	0.59	0.70	0.79	0.90	0.63	0.74	0.84	0.96	0.67	0.78	0.89	1.02	0.71	0.83	0.94	1.08
		PI	12.61	12.63	12.64	12.66	13.37	13.39	13.40	13.42	14.17	14.19	14.21	14.22	15.02	15.04	15.06	15.08

NOTE: Data highlighted in gray is extrapolated data and not actual test data. At 77°F outdoor conditions sweat protection activates causing a decrease in total capacity.

LEGEND

TC - Total Net Capacity (Btu/hour)
S/T: Sensible Cooling Capacity Ratio
PI: Power Input (kW)
Extrapolated Data

COOLING PERFORMANCE NON-DUCTED

COOLING PERFORMANCE 36K

NON-DUCTED COOLING PERFORMANCE 36K (Sheet 1 of 4)

AIRFLOW (CFM)	OUTDOOR DB (°F)	ID WB (°F)	60.8				64.4				66.2				71.6			
		ID DB (°F)	73.4	77.0	80.6	84.2	73.4	77.0	80.6	84.2	73.4	77.0	80.0	84.20	73.4	77.0	80.6	84.2
640	5	TC	21106	21135	21158	21187	22375	22401	22428	22454	23712	23743	23773	23800	25141	25169	25200	25231
		S/T	0.28	0.33	0.38	0.43	0.30	0.35	0.40	0.46	0.32	0.37	0.42	0.48	0.34	0.40	0.45	0.51
		PI	1.92	1.92	1.92	1.92	2.03	2.03	2.04	2.04	2.15	2.16	2.16	2.16	2.28	2.28	2.29	2.29
	14	TC	21332	21361	21385	21414	22614	22641	22668	22695	23966	23997	24028	24055	25411	25438	25470	25502
		S/T	0.28	0.33	0.38	0.43	0.30	0.35	0.40	0.46	0.32	0.37	0.43	0.49	0.34	0.40	0.45	0.51
		PI	1.63	1.63	1.64	1.64	1.73	1.73	1.73	1.74	1.83	1.84	1.84	1.84	1.94	1.95	1.95	1.95
	17	TC	21408	21436	21461	21489	22694	22721	22748	22775	24050	24082	24113	24140	25500	25528	25560	25592
		S/T	0.28	0.33	0.38	0.43	0.30	0.35	0.40	0.46	0.32	0.38	0.43	0.49	0.34	0.40	0.45	0.52
		PI	1.54	1.54	1.54	1.54	1.63	1.63	1.63	1.64	1.73	1.73	1.73	1.73	1.83	1.83	1.84	1.84
	23	TC	21487	21516	21540	21569	22778	22805	22832	22860	24140	24171	24202	24229	25595	25623	25654	25686
		S/T	0.29	0.34	0.38	0.43	0.30	0.36	0.40	0.46	0.32	0.38	0.43	0.49	0.34	0.40	0.45	0.52
		PI	1.53	1.53	1.53	1.54	1.62	1.62	1.63	1.63	1.72	1.72	1.72	1.73	1.82	1.83	1.83	1.83
	32	TC	21606	21635	21659	21688	22904	22932	22959	22986	24273	24305	24336	24363	25736	25764	25796	25829
		S/T	0.29	0.34	0.38	0.44	0.30	0.36	0.41	0.46	0.32	0.38	0.43	0.49	0.34	0.40	0.46	0.52
		PI	1.52	1.52	1.53	1.53	1.61	1.61	1.62	1.62	1.71	1.71	1.71	1.72	1.81	1.81	1.82	1.82
	41	TC	22499	22529	22554	22585	23851	23879	23907	23936	25276	25309	25342	25370	26800	26829	26862	26896
		S/T	0.29	0.34	0.38	0.44	0.31	0.36	0.41	0.47	0.32	0.38	0.43	0.49	0.34	0.40	0.46	0.52
		PI	1.53	1.53	1.53	1.53	1.62	1.62	1.62	1.63	1.72	1.72	1.72	1.72	1.82	1.82	1.82	1.83
	47	TC	23352	23383	23409	23441	24755	24784	24814	24843	26234	26268	26303	26332	27816	27846	27881	27916
		S/T	0.29	0.34	0.39	0.44	0.31	0.36	0.41	0.47	0.33	0.38	0.43	0.49	0.34	0.40	0.46	0.52
		PI	1.54	1.54	1.54	1.54	1.63	1.63	1.63	1.64	1.73	1.73	1.73	1.73	1.83	1.83	1.84	1.84
	50	TC	23660	23692	23719	23751	25082	25112	25142	25172	26581	26616	26650	26680	28184	28214	28249	28285
		S/T	0.29	0.34	0.39	0.44	0.31	0.36	0.41	0.47	0.33	0.38	0.43	0.50	0.35	0.41	0.46	0.53
		PI	1.58	1.58	1.58	1.58	1.67	1.67	1.67	1.68	1.77	1.77	1.77	1.78	1.88	1.88	1.88	1.88
	59	TC	24587	24620	24647	24681	26065	26095	26126	26157	27622	27658	27694	27725	29287	29319	29356	29392
		S/T	0.29	0.34	0.39	0.44	0.31	0.36	0.41	0.47	0.33	0.38	0.44	0.50	0.35	0.41	0.46	0.53
		PI	1.69	1.69	1.69	1.69	1.79	1.79	1.79	1.80	1.90	1.90	1.90	1.90	2.01	2.01	2.02	2.02
	68	TC	25513	25547	25576	25611	27047	27079	27111	27143	28663	28700	28737	28769	30391	30424	30462	30499
		S/T	0.29	0.34	0.39	0.45	0.31	0.36	0.41	0.47	0.33	0.39	0.44	0.50	0.35	0.41	0.47	0.53
		PI	1.80	1.80	1.81	1.81	1.91	1.91	1.91	1.92	2.02	2.03	2.03	2.03	2.15	2.15	2.15	2.15
	77	TC	26439	26475	26505	26540	28029	28062	28095	28128	29703	29742	29781	29814	31494	31528	31568	31607
		S/T	0.30	0.35	0.40	0.46	0.32	0.37	0.43	0.48	0.34	0.40	0.45	0.51	0.36	0.42	0.48	0.54
		PI	1.92	1.92	1.92	1.92	2.03	2.03	2.03	2.04	2.15	2.15	2.16	2.16	2.28	2.28	2.29	2.29
	86	TC	21748	21777	21802	21831	23055	23082	23110	23137	24433	24464	24496	24524	25906	25934	25966	25998
		S/T	0.30	0.36	0.41	0.46	0.32	0.38	0.43	0.49	0.34	0.40	0.46	0.52	0.36	0.43	0.48	0.55
		PI	2.08	2.08	2.08	2.08	2.20	2.20	2.21	2.21	2.33	2.34	2.34	2.34	2.47	2.48	2.48	2.48
	95	TC	21378	21406	21430	21459	22663	22689	22716	22743	24017	24048	24079	24106	25465	25492	25524	25556
		S/T	0.31	0.37	0.42	0.48	0.33	0.39	0.44	0.50	0.35	0.41	0.47	0.53	0.37	0.44	0.50	0.57
		PI	2.20	2.20	2.21	2.21	2.33	2.34	2.34	2.34	2.47	2.47	2.48	2.48	2.62	2.62	2.63	2.63
	104	TC	17029	17052	17071	17094	18053	18074	18096	18117	19132	19157	19181	19203	20285	20307	20332	20358
		S/T	0.33	0.39	0.44	0.50	0.35	0.41	0.46	0.53	0.37	0.43	0.49	0.56	0.39	0.46	0.52	0.59
		PI	4.44	4.45	4.46	4.46	4.71	4.72	4.72	4.73	4.99	5.00	5.01	5.01	5.29	5.30	5.31	5.31
	114.8	TC	11811	11827	11841	11856	12521	12536	12551	12566	13269	13287	13304	13319	14069	14085	14102	14120
		S/T	0.33	0.39	0.44	0.50	0.35	0.41	0.47	0.54	0.37	0.44	0.50	0.57	0.40	0.46	0.53	0.60
		PI	7.14	7.15	7.15	7.16	7.57	7.57	7.58	7.59	8.02	8.03	8.04	8.05	8.50	8.51	8.52	8.53
	122	TC	8333	8344	8353	8365	8833	8844	8854	8865	9361	9374	9386	9396	9926	9936	9949	9961
		S/T	0.34	0.40	0.46	0.52	0.36	0.43	0.49	0.55	0.39	0.45	0.52	0.59	0.41	0.48	0.55	0.62
		PI	8.93	8.94	8.95	8.97	9.47	9.48	9.49	9.50	10.03	10.05	10.06	10.07	10.64	10.65	10.66	10.68

Manufacturer reserves the right to change, at any time, specifications and designs without notice and without obligations.

NON-DUCTED COOLING PERFORMANCE 36K (Sheet 2 of 4)

AIRFLOW (CFM)	OUTDOOR DB (°F)	ID WB (°F)	60.8				64.4				66.2				71.6			
		ID DB (°F)	73.4	77.0	80.6	84.2	73.4	77.0	80.6	84.2	73.4	77.0	80.0	84.20	73.4	77.0	80.6	84.2
800	5	TC	26121	26157	26186	26221	27691	27724	27757	27790	29346	29384	29423	29455	31115	31149	31188	31227
		S/T	0.37	0.43	0.49	0.56	0.39	0.46	0.52	0.60	0.42	0.49	0.55	0.63	0.44	0.52	0.59	0.67
		PI	2.49	2.50	2.50	2.50	2.64	2.64	2.65	2.65	2.80	2.80	2.81	2.81	2.97	2.97	2.97	2.98
	14	TC	26401	26437	26467	26502	27988	28021	28055	28088	29661	29699	29738	29771	31449	31483	31522	31561
		S/T	0.37	0.44	0.50	0.56	0.39	0.46	0.53	0.60	0.42	0.49	0.56	0.63	0.44	0.52	0.59	0.67
		PI	2.12	2.13	2.13	2.13	2.25	2.25	2.26	2.26	2.38	2.39	2.39	2.39	2.53	2.53	2.53	2.54
	17	TC	26495	26530	26560	26596	28087	28120	28154	28187	29765	29804	29843	29876	31560	31594	31633	31673
		S/T	0.37	0.44	0.50	0.57	0.39	0.46	0.53	0.60	0.42	0.49	0.56	0.64	0.44	0.52	0.59	0.67
		PI	2.00	2.00	2.00	2.01	2.12	2.12	2.12	2.13	2.25	2.25	2.25	2.25	2.38	2.38	2.39	2.39
	23	TC	26593	26629	26658	26694	28191	28224	28258	28291	29876	29914	29953	29987	31677	31711	31751	31790
		S/T	0.37	0.44	0.50	0.57	0.40	0.46	0.53	0.60	0.42	0.49	0.56	0.64	0.44	0.52	0.59	0.68
		PI	1.99	1.99	2.00	2.00	2.11	2.11	2.12	2.12	2.24	2.24	2.24	2.25	2.37	2.37	2.38	2.38
	32	TC	26740	26776	26806	26842	28347	28381	28414	28448	30041	30080	30119	30153	31852	31887	31926	31966
		S/T	0.38	0.44	0.50	0.57	0.40	0.47	0.53	0.60	0.42	0.49	0.56	0.64	0.45	0.52	0.60	0.68
		PI	1.98	1.98	1.98	1.99	2.10	2.10	2.10	2.11	2.22	2.23	2.23	2.23	2.36	2.36	2.36	2.37
	41	TC	27845	27882	27913	27951	29518	29553	29588	29623	31282	31323	31364	31399	33168	33204	33245	33287
		S/T	0.38	0.44	0.50	0.57	0.40	0.47	0.53	0.61	0.42	0.50	0.57	0.64	0.45	0.53	0.60	0.68
		PI	1.99	1.99	1.99	1.99	2.11	2.11	2.11	2.11	2.23	2.24	2.24	2.24	2.37	2.37	2.37	2.38
	47	TC	28901	28939	28972	29011	30638	30674	30710	30747	32468	32510	32553	32589	34426	34463	34506	34549
		S/T	0.38	0.44	0.50	0.57	0.40	0.47	0.53	0.61	0.42	0.50	0.57	0.65	0.45	0.53	0.60	0.68
		PI	2.00	2.00	2.00	2.01	2.12	2.12	2.12	2.13	2.25	2.25	2.25	2.25	2.38	2.38	2.39	2.39
	50	TC	29283	29322	29355	29395	31043	31079	31116	31153	32898	32940	32983	33020	34881	34919	34962	35006
		S/T	0.38	0.44	0.51	0.58	0.40	0.47	0.54	0.61	0.43	0.50	0.57	0.65	0.45	0.53	0.60	0.69
		PI	2.05	2.05	2.05	2.06	2.17	2.17	2.18	2.18	2.30	2.30	2.31	2.31	2.44	2.44	2.45	2.45
	59	TC	30429	30470	30504	30545	32258	32296	32335	32373	34186	34230	34275	34313	36247	36286	36331	36376
		S/T	0.38	0.45	0.51	0.58	0.40	0.47	0.54	0.61	0.43	0.50	0.57	0.65	0.45	0.53	0.61	0.69
		PI	2.20	2.20	2.20	2.20	2.33	2.33	2.33	2.34	2.47	2.47	2.47	2.48	2.62	2.62	2.62	2.62
	68	TC	31576	31618	31654	31696	33473	33513	33553	33593	35474	35520	35566	35606	37612	37653	37700	37747
		S/T	0.38	0.45	0.51	0.58	0.41	0.48	0.54	0.62	0.43	0.51	0.57	0.65	0.46	0.54	0.61	0.69
		PI	2.34	2.35	2.35	2.35	2.48	2.49	2.49	2.49	2.63	2.64	2.64	2.64	2.79	2.79	2.80	2.80
	77	TC	32722	32766	32803	32847	34689	34730	34771	34812	36762	36809	36857	36898	38978	39020	39069	39117
		S/T	0.39	0.46	0.52	0.60	0.42	0.49	0.56	0.63	0.44	0.52	0.59	0.67	0.47	0.55	0.62	0.71
		PI	2.49	2.49	2.50	2.50	2.64	2.64	2.65	2.65	2.80	2.80	2.81	2.81	2.97	2.97	2.97	2.98
	86	TC	26916	26952	26982	27018	28533	28567	28601	28635	30238	30278	30317	30351	32061	32096	32136	32176
		S/T	0.40	0.47	0.53	0.61	0.42	0.50	0.56	0.64	0.45	0.53	0.60	0.68	0.47	0.56	0.63	0.72
		PI	2.70	2.70	2.71	2.71	2.86	2.87	2.87	2.87	3.03	3.04	3.04	3.04	3.22	3.22	3.22	3.23
	95	TC	26458	26493	26523	26559	28048	28081	28114	28148	29724	29762	29801	29834	31516	31550	31589	31629
		S/T	0.41	0.48	0.54	0.62	0.43	0.51	0.58	0.66	0.46	0.54	0.61	0.70	0.49	0.57	0.65	0.74
		PI	2.86	2.87	2.87	2.87	3.03	3.04	3.04	3.04	3.21	3.22	3.22	3.23	3.41	3.41	3.42	3.42
	104	TC	21076	21104	21128	21156	22343	22369	22396	22422	23678	23709	23739	23766	25105	25132	25164	25195
		S/T	0.43	0.50	0.57	0.65	0.45	0.53	0.61	0.69	0.48	0.57	0.64	0.73	0.51	0.60	0.68	0.78
		PI	5.78	5.79	5.79	5.80	6.13	6.13	6.14	6.15	6.49	6.50	6.51	6.52	6.88	6.89	6.90	6.91
	114.8	TC	14618	14638	14654	14674	15497	15515	15533	15552	16423	16444	16465	16484	17413	17432	17453	17475
		S/T	0.43	0.51	0.58	0.66	0.46	0.54	0.61	0.70	0.49	0.57	0.65	0.74	0.52	0.61	0.69	0.79
		PI	9.28	9.29	9.30	9.32	9.84	9.85	9.86	9.87	10.43	10.44	10.45	10.47	11.06	11.07	11.08	11.10
	122	TC	10313	10327	10338	10352	10933	10945	10958	10971	11586	11601	11616	11629	12284	12298	12313	12328
		S/T	0.45	0.53	0.60	0.68	0.48	0.56	0.64	0.72	0.51	0.59	0.67	0.77	0.54	0.63	0.71	0.81
		PI	11.62	11.63	11.64	11.66	12.31	12.33	12.34	12.36	13.05	13.07	13.08	13.10	13.84	13.85	13.87	13.89

Manufacturer reserves the right to change, at any time, specifications and designs without notice and without obligations.

NON-DUCTED COOLING PERFORMANCE 36K (Sheet 3 of 4)

AIRFLOW (CFM)	OUTDOOR DB (°F)	ID WB (°F)	60.8				64.4				66.2				71.6			
		ID DB (°F)	73.4	77.0	80.6	84.2	73.4	77.0	80.6	84.2	73.4	77.0	80.0	84.20	73.4	77.0	80.6	84.2
1056	5	TC	34139	34185	34223	34269	36191	36234	36277	36320	38353	38403	38453	38496	40666	40710	40760	40811
		S/T	0.48	0.57	0.64	0.73	0.51	0.60	0.68	0.78	0.54	0.64	0.72	0.83	0.58	0.68	0.77	0.88
		PI	3.26	3.26	3.26	3.27	3.45	3.46	3.46	3.46	3.66	3.66	3.67	3.67	3.88	3.88	3.89	3.89
	14	TC	34505	34551	34590	34637	36579	36622	36665	36709	38764	38815	38865	38909	41101	41146	41197	41248
		S/T	0.49	0.57	0.65	0.74	0.51	0.60	0.69	0.78	0.55	0.64	0.73	0.83	0.58	0.68	0.77	0.88
		PI	2.77	2.78	2.78	2.78	2.94	2.94	2.95	2.95	3.12	3.12	3.12	3.13	3.30	3.31	3.31	3.32
	17	TC	34627	34673	34712	34759	36708	36751	36795	36839	38901	38952	39003	39046	41247	41291	41343	41394
		S/T	0.49	0.57	0.65	0.74	0.52	0.61	0.69	0.78	0.55	0.64	0.73	0.83	0.58	0.68	0.77	0.88
		PI	2.61	2.62	2.62	2.62	2.77	2.77	2.78	2.78	2.94	2.94	2.94	2.95	3.11	3.12	3.12	3.12
	23	TC	34755	34802	34841	34888	36844	36887	36931	36975	39045	39096	39147	39191	41399	41444	41496	41548
		S/T	0.49	0.57	0.65	0.74	0.52	0.61	0.69	0.79	0.55	0.64	0.73	0.83	0.58	0.68	0.78	0.88
		PI	2.60	2.61	2.61	2.61	2.76	2.76	2.77	2.77	2.92	2.93	2.93	2.93	3.10	3.10	3.11	3.11
	32	TC	34947	34994	35034	35081	37048	37092	37136	37180	39262	39313	39364	39408	41628	41674	41725	41777
		S/T	0.49	0.58	0.65	0.75	0.52	0.61	0.69	0.79	0.55	0.65	0.74	0.84	0.58	0.69	0.78	0.89
		PI	2.59	2.59	2.59	2.60	2.74	2.74	2.75	2.75	2.91	2.91	2.91	2.92	3.08	3.08	3.09	3.09
	41	TC	36391	36440	36481	36530	38578	38624	38670	38716	40884	40937	40990	41036	43348	43395	43449	43504
		S/T	0.49	0.58	0.66	0.75	0.52	0.61	0.70	0.79	0.55	0.65	0.74	0.84	0.59	0.69	0.78	0.89
		PI	2.60	2.60	2.60	2.61	2.75	2.76	2.76	2.76	2.92	2.92	2.93	2.93	3.09	3.10	3.10	3.10
	47	TC	37771	37822	37864	37915	40041	40089	40136	40184	42434	42489	42544	42592	44992	45041	45097	45153
		S/T	0.49	0.58	0.66	0.75	0.52	0.61	0.70	0.80	0.56	0.65	0.74	0.84	0.59	0.69	0.78	0.89
		PI	2.61	2.62	2.62	2.62	2.77	2.77	2.78	2.78	2.94	2.94	2.94	2.95	3.11	3.12	3.12	3.12
	50	TC	38270	38322	38365	38417	40571	40619	40667	40715	42995	43051	43107	43155	45587	45636	45693	45750
		S/T	0.50	0.58	0.66	0.75	0.53	0.62	0.70	0.80	0.56	0.65	0.74	0.85	0.59	0.69	0.79	0.90
		PI	2.68	2.68	2.68	2.69	2.84	2.84	2.84	2.85	3.01	3.01	3.02	3.02	3.19	3.19	3.20	3.20
	59	TC	39769	39822	39867	39921	42159	42209	42259	42309	44678	44736	44795	44845	47372	47423	47482	47541
		S/T	0.50	0.58	0.66	0.76	0.53	0.62	0.70	0.80	0.56	0.66	0.75	0.85	0.59	0.70	0.79	0.90
		PI	2.87	2.87	2.88	2.88	3.04	3.05	3.05	3.05	3.22	3.23	3.23	3.24	3.42	3.42	3.43	3.43
	68	TC	41267	41323	41369	41425	43747	43799	43851	43903	46362	46422	46482	46534	49157	49210	49271	49333
		S/T	0.50	0.59	0.67	0.76	0.53	0.62	0.71	0.81	0.56	0.66	0.75	0.86	0.60	0.70	0.80	0.91
		PI	3.06	3.07	3.07	3.07	3.25	3.25	3.25	3.26	3.44	3.44	3.45	3.45	3.65	3.65	3.66	3.66
	77	TC	42766	42823	42871	42929	45336	45390	45443	45497	48045	48107	48170	48224	50941	50997	51060	51124
		S/T	0.51	0.60	0.69	0.78	0.54	0.64	0.73	0.83	0.58	0.68	0.77	0.88	0.61	0.72	0.82	0.93
		PI	3.25	3.26	3.26	3.27	3.45	3.45	3.46	3.46	3.66	3.66	3.67	3.67	3.88	3.88	3.89	3.89
	86	TC	35177	35224	35264	35311	37291	37335	37380	37424	39519	39571	39622	39666	41902	41947	42000	42052
		S/T	0.52	0.61	0.69	0.79	0.55	0.65	0.74	0.84	0.59	0.69	0.78	0.89	0.62	0.73	0.83	0.94
		PI	3.53	3.53	3.54	3.54	3.74	3.74	3.75	3.75	3.96	3.97	3.97	3.98	4.20	4.21	4.21	4.22
	95	TC	34578	34625	34664	34710	36656	36700	36743	36787	38847	38897	38948	38991	41189	41234	41285	41336
		S/T	0.53	0.63	0.71	0.81	0.57	0.66	0.75	0.86	0.60	0.70	0.80	0.91	0.64	0.75	0.85	0.97
		PI	3.74	3.74	3.75	3.75	3.96	3.97	3.97	3.98	4.20	4.21	4.21	4.22	4.45	4.46	4.46	4.47
	104	TC	27545	27582	27613	27650	29200	29235	29270	29304	30945	30985	31026	31060	32811	32846	32887	32928
		S/T	0.56	0.66	0.75	0.85	0.59	0.70	0.79	0.90	0.63	0.74	0.84	0.96	0.67	0.78	0.89	1.02
		PI	7.55	7.56	7.57	7.58	8.01	8.02	8.03	8.04	8.49	8.50	8.51	8.52	9.00	9.01	9.02	9.03
	114.8	TC	19105	19130	19152	19178	20253	20277	20301	20325	21463	21491	21519	21543	22757	22782	22810	22839
		S/T	0.57	0.67	0.76	0.86	0.60	0.71	0.80	0.91	0.64	0.75	0.85	0.97	0.68	0.79	0.90	1.03
		PI	12.13	12.15	12.16	12.18	12.86	12.87	12.89	12.91	13.63	13.65	13.66	13.68	14.45	14.46	14.48	14.50
	122	TC	13478	13496	13511	13529	14288	14305	14322	14339	15142	15162	15181	15198	16055	16072	16092	16112
		S/T	0.59	0.69	0.78	0.89	0.62	0.73	0.83	0.95	0.66	0.77	0.88	1.00	0.70	0.82	0.93	1.06
		PI	15.18	15.20	15.22	15.24	16.09	16.11	16.13	16.15	17.06	17.08	17.10	17.12	18.08	18.10	18.13	18.15

Manufacturer reserves the right to change, at any time, specifications and designs without notice and without obligations.

NON-DUCTED COOLING PERFORMANCE 36K (Sheet 4 of 4)

AIRFLOW (CFM)	OUTDOOR DB (°F)	ID WB (°F)	60.8				64.4				66.2				71.6			
		ID DB (°F)	73.4	77.0	80.6	84.2	73.4	77.0	80.6	84.2	73.4	77.0	80.0	84.20	73.4	77.0	80.6	84.2
1080	5	TC	34569	34616	34655	34701	36647	36690	36734	36777	38837	38887	38938	38981	41178	41223	41274	41325
		S/T	0.49	0.57	0.65	0.74	0.52	0.61	0.69	0.79	0.55	0.65	0.73	0.84	0.58	0.68	0.78	0.89
		PI	3.30	3.30	3.31	3.31	3.50	3.50	3.50	3.51	3.70	3.71	3.71	3.72	3.93	3.93	3.94	3.94
	14	TC	34940	34987	35026	35073	37040	37083	37127	37171	39253	39304	39355	39399	41619	41664	41716	41768
		S/T	0.49	0.58	0.66	0.75	0.52	0.61	0.70	0.79	0.55	0.65	0.74	0.84	0.59	0.69	0.78	0.89
		PI	2.81	2.81	2.82	2.82	2.98	2.98	2.98	2.99	3.16	3.16	3.16	3.17	3.35	3.35	3.35	3.36
	17	TC	35063	35110	35150	35197	37170	37214	37259	37303	39392	39443	39494	39538	41766	41812	41864	41916
		S/T	0.49	0.58	0.66	0.75	0.52	0.61	0.70	0.79	0.55	0.65	0.74	0.84	0.59	0.69	0.78	0.89
		PI	2.65	2.65	2.65	2.66	2.80	2.81	2.81	2.81	2.97	2.98	2.98	2.98	3.15	3.15	3.16	3.16
	23	TC	35193	35240	35280	35327	37308	37352	37397	37441	39537	39589	39640	39685	41921	41967	42019	42071
		S/T	0.49	0.58	0.66	0.75	0.52	0.61	0.70	0.80	0.56	0.65	0.74	0.84	0.59	0.69	0.79	0.90
		PI	2.63	2.64	2.64	2.65	2.79	2.80	2.80	2.80	2.96	2.96	2.97	2.97	3.14	3.14	3.15	3.15
	32	TC	35388	35435	35475	35523	37515	37559	37603	37648	39756	39808	39860	39904	42153	42199	42251	42304
		S/T	0.50	0.58	0.66	0.76	0.53	0.62	0.70	0.80	0.56	0.66	0.74	0.85	0.59	0.69	0.79	0.90
		PI	2.62	2.62	2.63	2.63	2.78	2.78	2.78	2.79	2.94	2.95	2.95	2.95	3.12	3.12	3.13	3.13
	41	TC	36850	36899	36941	36991	39065	39111	39157	39204	41399	41453	41507	41553	43895	43942	43997	44052
		S/T	0.50	0.59	0.67	0.76	0.53	0.62	0.71	0.80	0.56	0.66	0.75	0.85	0.59	0.70	0.79	0.90
		PI	2.63	2.63	2.64	2.64	2.79	2.79	2.79	2.80	2.95	2.96	2.96	2.97	3.13	3.14	3.14	3.14
	47	TC	38247	38298	38341	38393	40546	40594	40642	40690	42969	43024	43080	43128	45559	45608	45665	45722
		S/T	0.50	0.59	0.67	0.76	0.53	0.62	0.71	0.81	0.56	0.66	0.75	0.85	0.60	0.70	0.79	0.91
		PI	2.65	2.65	2.65	2.66	2.80	2.81	2.81	2.81	2.97	2.98	2.98	2.98	3.15	3.15	3.16	3.16
	50	TC	38753	38805	38848	38901	41082	41130	41179	41228	43537	43593	43650	43699	46161	46212	46269	46327
		S/T	0.50	0.59	0.67	0.76	0.53	0.62	0.71	0.81	0.56	0.66	0.75	0.86	0.60	0.70	0.80	0.91
		PI	2.71	2.71	2.72	2.72	2.87	2.88	2.88	2.88	3.05	3.05	3.05	3.06	3.23	3.23	3.24	3.24
	59	TC	40270	40324	40369	40424	42690	42741	42792	42842	45241	45300	45359	45410	47969	48021	48081	48140
		S/T	0.50	0.59	0.67	0.77	0.53	0.63	0.71	0.81	0.57	0.66	0.76	0.86	0.60	0.70	0.80	0.91
		PI	2.91	2.91	2.91	2.92	3.08	3.08	3.09	3.09	3.26	3.27	3.27	3.28	3.46	3.47	3.47	3.47
	68	TC	41787	41843	41890	41947	44299	44351	44404	44456	46946	47007	47068	47121	49776	49830	49892	49954
		S/T	0.51	0.59	0.68	0.77	0.54	0.63	0.72	0.82	0.57	0.67	0.76	0.87	0.60	0.71	0.81	0.92
		PI	3.10	3.11	3.11	3.11	3.29	3.29	3.30	3.30	3.48	3.49	3.49	3.50	3.69	3.70	3.70	3.71
	77	TC	43304	43363	43411	43470	45907	45962	46016	46071	48650	48714	48777	48831	51583	51639	51704	51768
		S/T	0.52	0.61	0.69	0.79	0.55	0.65	0.74	0.84	0.58	0.69	0.78	0.89	0.62	0.73	0.83	0.94
		PI	3.30	3.30	3.30	3.31	3.49	3.50	3.50	3.51	3.70	3.71	3.71	3.72	3.93	3.93	3.94	3.94
	86	TC	35620	35668	35708	35756	37761	37806	37851	37895	40017	40069	40122	40166	42430	42476	42529	42582
		S/T	0.53	0.62	0.70	0.80	0.56	0.66	0.75	0.85	0.59	0.70	0.79	0.90	0.63	0.74	0.84	0.95
		PI	3.57	3.58	3.58	3.59	3.79	3.79	3.80	3.80	4.01	4.02	4.02	4.03	4.26	4.26	4.27	4.27
	95	TC	35014	35061	35100	35148	37118	37162	37206	37251	39336	39388	39439	39483	41708	41753	41805	41857
		S/T	0.54	0.63	0.72	0.82	0.57	0.67	0.76	0.87	0.61	0.71	0.81	0.92	0.64	0.76	0.86	0.98
		PI	3.79	3.79	3.80	3.80	4.01	4.02	4.02	4.03	4.25	4.26	4.27	4.27	4.51	4.52	4.52	4.53
	104	TC	27892	27929	27961	27998	29568	29603	29638	29674	31335	31376	31417	31452	33224	33260	33302	33343
		S/T	0.57	0.67	0.76	0.86	0.60	0.71	0.80	0.91	0.64	0.75	0.85	0.97	0.68	0.79	0.90	1.03
		PI	7.65	7.66	7.67	7.68	8.11	8.12	8.13	8.14	8.59	8.60	8.62	8.62	9.11	9.12	9.13	9.14
	114.8	TC	19345	19371	19393	19419	20508	20532	20557	20581	21734	21762	21790	21815	23044	23069	23098	23126
		S/T	0.57	0.67	0.77	0.87	0.61	0.71	0.81	0.93	0.65	0.76	0.86	0.98	0.68	0.80	0.91	1.04
		PI	12.28	12.30	12.31	12.33	13.02	13.04	13.05	13.07	13.80	13.82	13.84	13.85	14.63	14.65	14.67	14.68
	122	TC	13648	13666	13682	13700	14468	14485	14502	14520	15333	15353	15373	15390	16257	16275	16295	16315
		S/T	0.59	0.70	0.79	0.90	0.63	0.74	0.84	0.96	0.67	0.78	0.89	1.02	0.71	0.83	0.94	1.08
		PI	15.37	15.39	15.41	15.43	16.30	16.32	16.34	16.35	17.27	17.29	17.32	17.33	18.31	18.33	18.35	18.38

NOTE: Data highlighted in gray is extrapolated data and not actual test data. At 77°F outdoor conditions sweat protection activates causing a decrease in total capacity.

LEGEND

TC - Total Net Capacity (Btu/hour)
S/T: Sensible Cooling Capacity Ratio
PI: Power Input (kW)
Extrapolated Data

COOLING PERFORMANCE NON-DUCTED

COOLING PERFORMANCE 48K

NON-DUCTED COOLING PERFORMANCE 48K (Sheet 1 of 4)

AIRFLOW (CFM)	OUTDOOR DB (°F)	ID WB (°F)	60.8				64.4				66.2				71.6			
		ID DB (°F)	73.4	77.0	80.6	84.2	73.4	77.0	80.6	84.2	73.4	77.0	80.0	84.20	73.4	77.0	80.6	84.2
800	5	TC	27783	27820	27851	27889	29452	29487	29522	29557	31212	31253	31294	31329	33094	33130	33171	33213
		S/T	0.28	0.33	0.38	0.43	0.30	0.35	0.40	0.46	0.32	0.37	0.42	0.48	0.34	0.40	0.45	0.51
		PI	2.21	2.21	2.21	2.22	2.34	2.34	2.35	2.35	2.48	2.48	2.49	2.49	2.63	2.63	2.64	2.64
	14	TC	27614	27651	27682	27720	29274	29308	29343	29378	31023	31063	31104	31138	32893	32929	32970	33011
		S/T	0.28	0.33	0.38	0.43	0.30	0.35	0.40	0.46	0.32	0.37	0.43	0.49	0.34	0.40	0.45	0.51
		PI	2.17	2.17	2.17	2.18	2.30	2.30	2.31	2.31	2.44	2.44	2.44	2.45	2.58	2.59	2.59	2.59
	17	TC	27558	27595	27626	27663	29214	29249	29283	29318	30960	31000	31040	31075	32826	32862	32903	32944
		S/T	0.28	0.33	0.38	0.43	0.30	0.35	0.40	0.46	0.32	0.38	0.43	0.49	0.34	0.40	0.45	0.52
		PI	2.16	2.16	2.16	2.16	2.29	2.29	2.29	2.29	2.42	2.43	2.43	2.43	2.57	2.57	2.57	2.58
	23	TC	28007	28044	28076	28114	29690	29725	29760	29796	31464	31505	31546	31581	33361	33397	33439	33480
		S/T	0.29	0.34	0.38	0.43	0.30	0.36	0.40	0.46	0.32	0.38	0.43	0.49	0.34	0.40	0.45	0.52
		PI	2.17	2.17	2.17	2.18	2.30	2.30	2.30	2.31	2.44	2.44	2.44	2.45	2.58	2.59	2.59	2.59
	32	TC	28680	28719	28751	28790	30404	30440	30476	30512	32221	32262	32304	32340	34163	34200	34243	34285
		S/T	0.29	0.34	0.38	0.44	0.30	0.36	0.41	0.46	0.32	0.38	0.43	0.49	0.34	0.40	0.46	0.52
		PI	2.19	2.19	2.19	2.20	2.32	2.32	2.32	2.33	2.46	2.46	2.46	2.47	2.61	2.61	2.61	2.61
	41	TC	29776	29816	29850	29890	31566	31603	31641	31678	33452	33496	33539	33577	35469	35507	35551	35596
		S/T	0.29	0.34	0.38	0.44	0.31	0.36	0.41	0.47	0.32	0.38	0.43	0.49	0.34	0.40	0.46	0.52
		PI	2.20	2.20	2.21	2.21	2.33	2.34	2.34	2.34	2.47	2.48	2.48	2.48	2.62	2.63	2.63	2.63
	47	TC	30648	30689	30724	30765	32490	32528	32567	32606	34431	34476	34521	34560	36507	36547	36592	36638
		S/T	0.29	0.34	0.39	0.44	0.31	0.36	0.41	0.47	0.33	0.38	0.43	0.49	0.34	0.40	0.46	0.52
		PI	2.21	2.21	2.21	2.22	2.34	2.35	2.35	2.35	2.48	2.49	2.49	2.49	2.63	2.63	2.64	2.64
	50	TC	30915	30957	30991	31033	32773	32812	32851	32890	34732	34777	34822	34861	36825	36865	36911	36957
		S/T	0.29	0.34	0.39	0.44	0.31	0.36	0.41	0.47	0.33	0.38	0.43	0.50	0.35	0.41	0.46	0.53
		PI	2.23	2.23	2.23	2.23	2.36	2.36	2.37	2.37	2.50	2.50	2.51	2.51	2.65	2.65	2.66	2.66
	59	TC	31717	31759	31795	31838	33623	33663	33703	33743	35632	35678	35725	35765	37780	37821	37868	37915
		S/T	0.29	0.34	0.39	0.44	0.31	0.36	0.41	0.47	0.33	0.38	0.44	0.50	0.35	0.41	0.46	0.53
		PI	2.28	2.28	2.28	2.29	2.41	2.42	2.42	2.42	2.56	2.56	2.56	2.57	2.71	2.72	2.72	2.72
	68	TC	32518	32562	32598	32642	34472	34513	34554	34595	36532	36580	36627	36668	38735	38777	38825	38873
		S/T	0.29	0.34	0.39	0.45	0.31	0.36	0.41	0.47	0.33	0.39	0.44	0.50	0.35	0.41	0.47	0.53
		PI	2.33	2.33	2.33	2.34	2.47	2.47	2.47	2.48	2.61	2.62	2.62	2.62	2.77	2.78	2.78	2.78
	77	TC	33319	33364	33402	33447	35322	35364	35406	35448	37433	37481	37530	37572	39689	39733	39782	39832
		S/T	0.30	0.35	0.40	0.46	0.32	0.37	0.43	0.48	0.34	0.40	0.45	0.51	0.36	0.42	0.48	0.54
		PI	2.38	2.38	2.38	2.39	2.52	2.52	2.53	2.53	2.67	2.67	2.68	2.68	2.83	2.84	2.84	2.84
	86	TC	27521	27558	27589	27626	29175	29210	29244	29279	30918	30959	30999	31034	32782	32818	32859	32900
		S/T	0.30	0.36	0.41	0.46	0.32	0.38	0.43	0.49	0.34	0.40	0.46	0.52	0.36	0.43	0.48	0.55
		PI	2.58	2.58	2.59	2.59	2.73	2.74	2.74	2.74	2.90	2.90	2.91	2.91	3.07	3.08	3.08	3.08
	95	TC	26799	26835	26866	26902	28410	28444	28477	28511	30108	30147	30186	30220	31923	31958	31997	32037
		S/T	0.31	0.37	0.42	0.48	0.33	0.39	0.44	0.50	0.35	0.41	0.47	0.53	0.37	0.44	0.50	0.57
		PI	2.67	2.67	2.67	2.68	2.83	2.83	2.83	2.84	2.99	3.00	3.00	3.01	3.17	3.18	3.18	3.19
	104	TC	22453	22484	22509	22539	23803	23831	23859	23888	25225	25258	25291	25319	26746	26775	26808	26842
		S/T	0.33	0.39	0.44	0.50	0.35	0.41	0.46	0.53	0.37	0.43	0.49	0.56	0.39	0.46	0.52	0.59
		PI	6.07	6.07	6.08	6.09	6.43	6.44	6.45	6.45	6.81	6.82	6.83	6.84	7.22	7.23	7.24	7.25
	114.8	TC	17238	17261	17281	17304	18274	18296	18318	18339	19366	19391	19417	19438	20534	20556	20582	20607
		S/T	0.33	0.39	0.44	0.50	0.35	0.41	0.47	0.54	0.37	0.44	0.50	0.57	0.40	0.46	0.53	0.60
		PI	10.15	10.16	10.17	10.18	10.76	10.77	10.78	10.79	11.40	11.41	11.43	11.44	12.09	12.10	12.11	12.13
	122	TC	13761	13780	13795	13814	14588	14606	14623	14640	15460	15480	15500	15518	16392	16410	16430	16451
		S/T	0.34	0.40	0.46	0.52	0.36	0.43	0.49	0.55	0.39	0.45	0.52	0.59	0.41	0.48	0.55	0.62
		PI	12.87	12.88	12.90	12.92	13.64	13.66	13.67	13.69	14.45	14.47	14.49	14.51	15.33	15.34	15.36	15.38

Manufacturer reserves the right to change, at any time, specifications and designs without notice and without obligations.

NON-DUCTED COOLING PERFORMANCE 48K (Sheet 2 of 4)

AIRFLOW (CFM)	OUTDOOR DB (°F)	ID WB (°F)	60.8				64.4				66.2				71.6			
		ID DB (°F)	73.4	77.0	80.6	84.2	73.4	77.0	80.6	84.2	73.4	77.0	80.0	84.20	73.4	77.0	80.6	84.2
1000	5	TC	34384	34431	34469	34516	36451	36494	36537	36581	38629	38679	38730	38773	40958	41002	41053	41105
		S/T	0.37	0.43	0.49	0.56	0.39	0.46	0.52	0.60	0.42	0.49	0.55	0.63	0.44	0.52	0.59	0.67
		PI	2.87	2.88	2.88	2.88	3.04	3.05	3.05	3.06	3.23	3.23	3.24	3.24	3.42	3.42	3.43	3.43
	14	TC	34176	34222	34260	34306	36230	36273	36316	36359	38395	38445	38495	38538	40709	40754	40804	40855
		S/T	0.37	0.44	0.50	0.56	0.39	0.46	0.53	0.60	0.42	0.49	0.56	0.63	0.44	0.52	0.59	0.67
		PI	2.82	2.82	2.83	2.83	2.99	2.99	3.00	3.00	3.17	3.17	3.18	3.18	3.36	3.36	3.37	3.37
	17	TC	34106	34152	34190	34237	36156	36199	36242	36285	38317	38367	38416	38459	40627	40671	40721	40772
		S/T	0.37	0.44	0.50	0.57	0.39	0.46	0.53	0.60	0.42	0.49	0.56	0.64	0.44	0.52	0.59	0.67
		PI	2.80	2.81	2.81	2.81	2.97	2.98	2.98	2.98	3.15	3.15	3.16	3.16	3.34	3.34	3.35	3.35
	23	TC	34662	34708	34747	34794	36745	36789	36832	36876	38941	38991	39042	39086	41288	41333	41385	41436
		S/T	0.37	0.44	0.50	0.57	0.40	0.46	0.53	0.60	0.42	0.49	0.56	0.64	0.44	0.52	0.59	0.68
		PI	2.82	2.82	2.83	2.83	2.99	2.99	3.00	3.00	3.17	3.17	3.18	3.18	3.36	3.36	3.37	3.37
	32	TC	35495	35543	35583	35631	37628	37673	37718	37762	39877	39929	39981	40025	42281	42327	42379	42432
		S/T	0.38	0.44	0.50	0.57	0.40	0.47	0.53	0.60	0.42	0.49	0.56	0.64	0.45	0.52	0.60	0.68
		PI	2.84	2.85	2.85	2.86	3.02	3.02	3.02	3.03	3.20	3.20	3.20	3.21	3.39	3.39	3.40	3.40
	41	TC	36852	36901	36943	36992	39067	39113	39159	39206	41401	41455	41509	41555	43897	43945	43999	44054
		S/T	0.38	0.44	0.50	0.57	0.40	0.47	0.53	0.61	0.42	0.50	0.57	0.64	0.45	0.53	0.60	0.68
		PI	2.86	2.87	2.87	2.87	3.04	3.04	3.04	3.05	3.22	3.22	3.22	3.23	3.41	3.41	3.42	3.42
	47	TC	37931	37982	38024	38076	40210	40258	40306	40354	42613	42669	42724	42772	45182	45231	45287	45344
		S/T	0.38	0.44	0.50	0.57	0.40	0.47	0.53	0.61	0.42	0.50	0.57	0.65	0.45	0.53	0.60	0.68
		PI	2.87	2.88	2.88	2.88	3.05	3.05	3.05	3.06	3.23	3.23	3.24	3.24	3.42	3.43	3.43	3.44
	50	TC	38261	38313	38356	38407	40561	40609	40657	40705	42985	43040	43096	43145	45576	45626	45682	45739
		S/T	0.38	0.44	0.51	0.58	0.40	0.47	0.54	0.61	0.43	0.50	0.57	0.65	0.45	0.53	0.60	0.69
		PI	2.90	2.90	2.90	2.91	3.07	3.07	3.08	3.08	3.25	3.26	3.26	3.26	3.45	3.45	3.46	3.46
	59	TC	39253	39306	39350	39403	41612	41662	41711	41761	44099	44156	44214	44263	46757	46808	46867	46925
		S/T	0.38	0.45	0.51	0.58	0.40	0.47	0.54	0.61	0.43	0.50	0.57	0.65	0.45	0.53	0.61	0.69
		PI	2.96	2.96	2.97	2.97	3.14	3.14	3.15	3.15	3.33	3.33	3.34	3.34	3.53	3.53	3.54	3.54
	68	TC	40245	40299	40344	40399	42664	42714	42765	42816	45213	45272	45331	45382	47939	47991	48051	48111
		S/T	0.38	0.45	0.51	0.58	0.41	0.48	0.54	0.62	0.43	0.51	0.57	0.65	0.46	0.54	0.61	0.69
		PI	3.03	3.03	3.03	3.04	3.21	3.21	3.22	3.22	3.40	3.40	3.41	3.41	3.61	3.61	3.61	3.62
	77	TC	41237	41292	41339	41394	43715	43767	43819	43871	46328	46388	46448	46500	49121	49174	49235	49296
		S/T	0.39	0.46	0.52	0.60	0.42	0.49	0.56	0.63	0.44	0.52	0.59	0.67	0.47	0.55	0.62	0.71
		PI	3.09	3.10	3.10	3.10	3.28	3.28	3.29	3.29	3.47	3.48	3.48	3.49	3.68	3.69	3.69	3.70
	86	TC	34061	34106	34145	34191	36108	36151	36193	36236	38265	38315	38365	38408	40572	40616	40667	40718
		S/T	0.40	0.47	0.53	0.61	0.42	0.50	0.56	0.64	0.45	0.53	0.60	0.68	0.47	0.56	0.63	0.72
		PI	3.35	3.36	3.36	3.37	3.56	3.56	3.56	3.57	3.77	3.77	3.78	3.78	4.00	4.00	4.01	4.01
	95	TC	33168	33212	33249	33294	35161	35203	35244	35286	37262	37311	37359	37401	39508	39551	39601	39650
		S/T	0.41	0.48	0.54	0.62	0.43	0.51	0.58	0.66	0.46	0.54	0.61	0.70	0.49	0.57	0.65	0.74
		PI	3.47	3.47	3.47	3.48	3.67	3.68	3.68	3.69	3.89	3.90	3.90	3.91	4.13	4.13	4.14	4.14
	104	TC	27789	27826	27857	27895	29459	29494	29529	29564	31219	31260	31301	31336	33101	33137	33179	33220
		S/T	0.43	0.50	0.57	0.65	0.45	0.53	0.61	0.69	0.48	0.57	0.64	0.73	0.51	0.60	0.68	0.78
		PI	7.89	7.90	7.91	7.92	8.36	8.37	8.38	8.39	8.86	8.87	8.88	8.89	9.40	9.41	9.42	9.43
	114.8	TC	21334	21363	21387	21416	22617	22643	22670	22697	23968	23999	24030	24057	25413	25441	25472	25504
		S/T	0.43	0.51	0.58	0.66	0.46	0.54	0.61	0.70	0.49	0.57	0.65	0.74	0.52	0.61	0.69	0.79
		PI	13.19	13.21	13.23	13.25	13.99	14.00	14.02	14.04	14.82	14.84	14.86	14.88	15.72	15.73	15.75	15.77
	122	TC	17031	17054	17073	17096	18055	18076	18098	18119	19134	19159	19184	19205	20287	20309	20335	20360
		S/T	0.45	0.53	0.60	0.68	0.48	0.56	0.64	0.72	0.51	0.59	0.67	0.77	0.54	0.63	0.71	0.81
		PI	16.73	16.75	16.77	16.80	17.74	17.76	17.78	17.80	18.80	18.82	18.85	18.87	19.93	19.95	19.98	20.00

Manufacturer reserves the right to change, at any time, specifications and designs without notice and without obligations.

NON-DUCTED COOLING PERFORMANCE 48K (Sheet 3 of 4)

AIRFLOW (CFM)	OUTDOOR DB (°F)	ID WB (°F)	60.8				64.4				66.2				71.6			
		ID DB (°F)	73.4	77.0	80.6	84.2	73.4	77.0	80.6	84.2	73.4	77.0	80.0	84.20	73.4	77.0	80.6	84.2
1320	5	TC	44938	44998	45049	45110	47639	47695	47752	47809	50486	50551	50617	50674	53529	53587	53654	53721
		S/T	0.48	0.57	0.64	0.73	0.51	0.60	0.68	0.78	0.54	0.64	0.72	0.83	0.58	0.68	0.77	0.88
		PI	3.75	3.76	3.76	3.77	3.98	3.98	3.99	3.99	4.22	4.22	4.23	4.23	4.47	4.48	4.48	4.49
	14	TC	44665	44725	44776	44836	47350	47406	47462	47519	50179	50245	50310	50366	53204	53262	53329	53395
		S/T	0.49	0.57	0.65	0.74	0.51	0.60	0.69	0.78	0.55	0.64	0.73	0.83	0.58	0.68	0.77	0.88
		PI	3.69	3.69	3.70	3.70	3.91	3.91	3.92	3.92	4.14	4.15	4.15	4.16	4.39	4.40	4.40	4.41
	17	TC	44575	44634	44685	44745	47254	47310	47366	47422	50077	50142	50208	50264	53096	53154	53220	53286
		S/T	0.49	0.57	0.65	0.74	0.52	0.61	0.69	0.78	0.55	0.64	0.73	0.83	0.58	0.68	0.77	0.88
		PI	3.66	3.67	3.67	3.68	3.89	3.89	3.89	3.90	4.12	4.12	4.13	4.13	4.37	4.37	4.38	4.38
	23	TC	45301	45361	45412	45474	48023	48080	48137	48194	50893	50959	51025	51082	53961	54020	54087	54154
		S/T	0.49	0.57	0.65	0.74	0.52	0.61	0.69	0.79	0.55	0.64	0.73	0.83	0.58	0.68	0.78	0.88
		PI	3.69	3.69	3.69	3.70	3.91	3.91	3.92	3.92	4.14	4.15	4.15	4.16	4.39	4.40	4.40	4.41
	32	TC	46390	46452	46504	46567	49178	49236	49294	49353	52116	52184	52252	52310	55258	55318	55387	55456
		S/T	0.49	0.58	0.65	0.75	0.52	0.61	0.69	0.79	0.55	0.65	0.74	0.84	0.58	0.69	0.78	0.89
		PI	3.72	3.72	3.73	3.73	3.94	3.95	3.95	3.95	4.18	4.18	4.19	4.19	4.43	4.43	4.44	4.44
	41	TC	48163	48227	48282	48347	51057	51118	51178	51239	54108	54179	54249	54310	57370	57433	57504	57576
		S/T	0.49	0.58	0.66	0.75	0.52	0.61	0.70	0.79	0.55	0.65	0.74	0.84	0.59	0.69	0.78	0.89
		PI	3.74	3.75	3.75	3.76	3.97	3.97	3.98	3.98	4.20	4.21	4.21	4.22	4.46	4.46	4.47	4.47
	47	TC	49573	49639	49695	49762	52552	52614	52677	52739	55693	55765	55837	55900	59050	59114	59188	59261
		S/T	0.49	0.58	0.66	0.75	0.52	0.61	0.70	0.80	0.56	0.65	0.74	0.84	0.59	0.69	0.78	0.89
		PI	3.76	3.76	3.76	3.77	3.98	3.99	3.99	4.00	4.22	4.22	4.23	4.23	4.47	4.48	4.48	4.49
	50	TC	50005	50072	50128	50196	53010	53073	53136	53199	56178	56251	56324	56387	59565	59629	59704	59778
		S/T	0.50	0.58	0.66	0.75	0.53	0.62	0.70	0.80	0.56	0.65	0.74	0.85	0.59	0.69	0.79	0.90
		PI	3.78	3.79	3.79	3.80	4.01	4.02	4.02	4.03	4.25	4.26	4.26	4.27	4.51	4.51	4.52	4.52
	59	TC	51301	51370	51428	51497	54385	54449	54513	54578	57634	57709	57784	57849	61109	61175	61251	61328
		S/T	0.50	0.58	0.66	0.76	0.53	0.62	0.70	0.80	0.56	0.66	0.75	0.85	0.59	0.70	0.79	0.90
		PI	3.87	3.88	3.88	3.88	4.10	4.11	4.11	4.12	4.35	4.35	4.36	4.36	4.61	4.61	4.62	4.63
	68	TC	52597	52668	52727	52798	55759	55825	55891	55957	59091	59167	59244	59311	62653	62721	62799	62877
		S/T	0.50	0.59	0.67	0.76	0.53	0.62	0.71	0.81	0.56	0.66	0.75	0.86	0.60	0.70	0.80	0.91
		PI	3.96	3.96	3.97	3.97	4.19	4.20	4.20	4.21	4.44	4.45	4.46	4.46	4.71	4.72	4.72	4.73
	77	TC	53894	53966	54027	54100	57133	57201	57268	57336	60547	60626	60705	60772	64197	64267	64347	64427
		S/T	0.51	0.60	0.69	0.78	0.54	0.64	0.73	0.83	0.58	0.68	0.77	0.88	0.61	0.72	0.82	0.93
		PI	4.04	4.05	4.05	4.06	4.28	4.29	4.29	4.30	4.54	4.55	4.55	4.56	4.81	4.82	4.83	4.83
	86	TC	44515	44575	44625	44685	47190	47246	47302	47358	50010	50075	50140	50196	53025	53083	53149	53215
		S/T	0.52	0.61	0.69	0.79	0.55	0.65	0.74	0.84	0.59	0.69	0.78	0.89	0.62	0.73	0.83	0.94
		PI	4.38	4.39	4.40	4.40	4.65	4.65	4.66	4.66	4.93	4.93	4.94	4.94	5.22	5.23	5.23	5.24
	95	TC	43348	43406	43455	43513	45953	46007	46062	46117	48699	48762	48826	48880	51635	51691	51755	51820
		S/T	0.53	0.63	0.71	0.81	0.57	0.66	0.75	0.86	0.60	0.70	0.80	0.91	0.64	0.75	0.85	0.97
		PI	4.53	4.54	4.54	4.55	4.80	4.81	4.81	4.82	5.09	5.10	5.10	5.11	5.40	5.40	5.41	5.41
	104	TC	36318	36367	36408	36457	38501	38547	38592	38638	40802	40855	40908	40953	43261	43308	43362	43416
		S/T	0.56	0.66	0.75	0.85	0.59	0.70	0.79	0.90	0.63	0.74	0.84	0.96	0.67	0.78	0.89	1.02
		PI	10.31	10.32	10.33	10.35	10.93	10.94	10.95	10.97	11.58	11.60	11.61	11.62	12.28	12.29	12.31	12.32
	114.8	TC	27883	27920	27951	27989	29558	29593	29628	29664	31325	31365	31406	31441	33213	33249	33291	33332
		S/T	0.57	0.67	0.76	0.86	0.60	0.71	0.80	0.91	0.64	0.75	0.85	0.97	0.68	0.79	0.90	1.03
		PI	17.24	17.27	17.29	17.31	18.28	18.30	18.32	18.35	19.37	19.40	19.42	19.45	20.54	20.56	20.59	20.61
	122	TC	22259	22289	22314	22344	23597	23625	23653	23681	25007	25039	25072	25100	26514	26543	26576	26609
		S/T	0.59	0.69	0.78	0.89	0.62	0.73	0.83	0.95	0.66	0.77	0.88	1.00	0.70	0.82	0.93	1.06
		PI	21.87	21.90	21.92	21.95	23.18	23.21	23.24	23.26	24.57	24.60	24.63	24.66	26.05	26.08	26.11	26.14

Manufacturer reserves the right to change, at any time, specifications and designs without notice and without obligations.

NON-DUCTED COOLING PERFORMANCE 48K (Sheet 4 of 4)

AIRFLOW (CFM)	OUTDOOR DB (°F)	ID WB (°F)	60.8				64.4				66.2				71.6			
		ID DB (°F)	73.4	77.0	80.6	84.2	73.4	77.0	80.6	84.2	73.4	77.0	80.0	84.20	73.4	77.0	80.6	84.2
1350	5	TC	45504	45566	45617	45678	48239	48296	48354	48411	51122	51188	51255	51312	54204	54263	54330	54398
		S/T	0.49	0.57	0.65	0.74	0.52	0.61	0.69	0.79	0.55	0.65	0.73	0.84	0.58	0.68	0.78	0.89
		PI	3.80	3.81	3.81	3.82	4.03	4.03	4.04	4.04	4.27	4.28	4.28	4.29	4.53	4.53	4.54	4.54
	14	TC	45228	45289	45340	45401	47947	48003	48060	48117	50812	50878	50944	51001	53875	53933	54001	54068
		S/T	0.49	0.58	0.66	0.75	0.52	0.61	0.70	0.79	0.55	0.65	0.74	0.84	0.59	0.69	0.78	0.89
		PI	3.73	3.74	3.74	3.75	3.96	3.96	3.97	3.97	4.19	4.20	4.21	4.21	4.45	4.45	4.46	4.46
	17	TC	45136	45197	45248	45309	47849	47906	47963	48019	50708	50774	50840	50897	53765	53824	53891	53958
		S/T	0.49	0.58	0.66	0.75	0.52	0.61	0.70	0.79	0.55	0.65	0.74	0.84	0.59	0.69	0.78	0.89
		PI	3.71	3.72	3.72	3.73	3.93	3.94	3.94	3.95	4.17	4.17	4.18	4.18	4.42	4.43	4.43	4.44
	23	TC	45871	45933	45985	46047	48628	48686	48744	48802	51534	51601	51668	51726	54641	54700	54768	54837
		S/T	0.49	0.58	0.66	0.75	0.52	0.61	0.70	0.80	0.56	0.65	0.74	0.84	0.59	0.69	0.79	0.90
		PI	3.73	3.74	3.74	3.75	3.96	3.96	3.97	3.97	4.19	4.20	4.20	4.21	4.45	4.45	4.46	4.46
	32	TC	46974	47037	47090	47154	49797	49856	49915	49975	52773	52842	52910	52969	55954	56015	56085	56155
		S/T	0.50	0.58	0.66	0.76	0.53	0.62	0.70	0.80	0.56	0.66	0.74	0.85	0.59	0.69	0.79	0.90
		PI	3.76	3.77	3.77	3.78	3.99	4.00	4.00	4.00	4.23	4.23	4.24	4.24	4.48	4.49	4.49	4.50
	41	TC	48770	48835	48890	48956	51701	51762	51823	51885	54790	54861	54933	54994	58093	58156	58229	58301
		S/T	0.50	0.59	0.67	0.76	0.53	0.62	0.71	0.80	0.56	0.66	0.75	0.85	0.59	0.70	0.79	0.90
		PI	3.79	3.79	3.80	3.80	4.02	4.02	4.03	4.03	4.26	4.26	4.27	4.27	4.51	4.52	4.52	4.53
	47	TC	50197	50265	50321	50389	53214	53277	53341	53404	56394	56468	56541	56604	59794	59859	59933	60008
		S/T	0.50	0.59	0.67	0.76	0.53	0.62	0.71	0.81	0.56	0.66	0.75	0.85	0.60	0.70	0.79	0.91
		PI	3.80	3.81	3.81	3.82	4.03	4.04	4.04	4.05	4.27	4.28	4.28	4.29	4.53	4.53	4.54	4.55
	50	TC	50635	50703	50760	50828	53678	53742	53806	53869	56886	56960	57034	57098	60315	60381	60456	60531
		S/T	0.50	0.59	0.67	0.76	0.53	0.62	0.71	0.81	0.56	0.66	0.75	0.86	0.60	0.70	0.80	0.91
		PI	3.83	3.84	3.84	3.85	4.06	4.07	4.07	4.08	4.30	4.31	4.32	4.32	4.56	4.57	4.57	4.58
	59	TC	51948	52017	52076	52146	55070	55135	55200	55266	58361	58436	58512	58578	61879	61946	62023	62100
		S/T	0.50	0.59	0.67	0.77	0.53	0.63	0.71	0.81	0.57	0.66	0.76	0.86	0.60	0.70	0.80	0.91
		PI	3.92	3.92	3.93	3.93	4.15	4.16	4.16	4.17	4.40	4.41	4.41	4.42	4.67	4.67	4.68	4.68
	68	TC	53260	53332	53392	53464	56461	56528	56595	56662	59835	59913	59991	60058	63442	63511	63590	63670
		S/T	0.51	0.59	0.68	0.77	0.54	0.63	0.72	0.82	0.57	0.67	0.76	0.87	0.60	0.71	0.81	0.92
		PI	4.01	4.01	4.02	4.02	4.25	4.25	4.26	4.26	4.50	4.51	4.51	4.52	4.77	4.78	4.78	4.79
	77	TC	54573	54646	54708	54781	57853	57921	57990	58059	61310	61390	61470	61538	65006	65077	65158	65239
		S/T	0.52	0.61	0.69	0.79	0.55	0.65	0.74	0.84	0.58	0.69	0.78	0.89	0.62	0.73	0.83	0.94
		PI	4.09	4.10	4.10	4.11	4.34	4.34	4.35	4.35	4.60	4.60	4.61	4.61	4.87	4.88	4.89	4.89
	86	TC	45076	45136	45187	45248	47785	47842	47898	47955	50641	50706	50772	50829	53693	53752	53819	53886
		S/T	0.53	0.62	0.70	0.80	0.56	0.66	0.75	0.85	0.59	0.70	0.79	0.90	0.63	0.74	0.84	0.95
		PI	4.44	4.45	4.45	4.46	4.71	4.71	4.72	4.72	4.99	4.99	5.00	5.01	5.29	5.29	5.30	5.31
	95	TC	43894	43953	44002	44062	46532	46587	46642	46698	49313	49377	49441	49496	52285	52342	52407	52473
		S/T	0.54	0.63	0.72	0.82	0.57	0.67	0.76	0.87	0.61	0.71	0.81	0.92	0.64	0.76	0.86	0.98
		PI	4.59	4.59	4.60	4.60	4.86	4.87	4.87	4.88	5.15	5.16	5.17	5.17	5.46	5.47	5.48	5.48
	104	TC	36776	36825	36867	36916	38986	39032	39079	39125	41316	41369	41423	41469	43806	43854	43909	43963
		S/T	0.57	0.67	0.76	0.86	0.60	0.71	0.80	0.91	0.64	0.75	0.85	0.97	0.68	0.79	0.90	1.03
		PI	10.44	10.45	10.46	10.48	11.07	11.08	11.09	11.11	11.73	11.74	11.76	11.77	12.43	12.45	12.46	12.48
	114.8	TC	28234	28272	28304	28342	29931	29966	30002	30037	31719	31761	31802	31837	33632	33668	33710	33752
		S/T	0.57	0.67	0.77	0.87	0.61	0.71	0.81	0.93	0.65	0.76	0.86	0.98	0.68	0.80	0.91	1.04
		PI	17.46	17.49	17.50	17.53	18.51	18.53	18.56	18.58	19.62	19.64	19.67	19.69	20.80	20.82	20.85	20.87
	122	TC	22539	22570	22595	22625	23894	23922	23951	23979	25322	25355	25388	25416	26848	26878	26911	26945
		S/T	0.59	0.70	0.79	0.90	0.63	0.74	0.84	0.96	0.67	0.78	0.89	1.02	0.71	0.83	0.94	1.08
		PI	22.14	22.17	22.20	22.23	23.47	23.50	23.53	23.56	24.88	24.91	24.94	24.97	26.38	26.41	26.44	26.47

NOTE: Data highlighted in gray is extrapolated data and not actual test data. At 77°F outdoor conditions sweat protection activates causing a decrease in total capacity.

LEGEND

TC - Total Net Capacity (Btu/hour)
S/T: Sensible Cooling Capacity Ratio
PI: Power Input (kW)
Extrapolated Data

HEATING PERFORMANCE NON-DUCTED

"HEATING PERFORMANCE 18K" on page 27 "HEATING PERFORMANCE 36K" on page 29
"HEATING PERFORMANCE 27K" on page 28 "HEATING PERFORMANCE 48K" on page 30

HEATING PERFORMANCE 18K

NON-DUCTED HEATING PERFORMANCE 18K

AIRFLOW (CFM)	OUTDOOR DB (°F)	HEATING PERFORMANCE AT INDOOR DRY BULB TEMPERATURE									
		TC : Total Heating Capacity (BTU/hr)					PI : Power Input (kW)				
		Indoor Conditions (DB °F)					Indoor Conditions (DB °F)				
		60.8	68.0	70.0	71.6	75.2	60.8	68.0	70.00	71.6	75.2
320	-13.0	5223	5118	5093	4991	4946	1.69	1.71	1.71	1.72	1.72
	0.0	6744	6610	6576	6445	6387	1.75	1.77	1.77	1.78	1.78
	5.0	7505	7355	7318	7172	7107	1.78	1.80	1.80	1.81	1.81
	14.0	8875	8697	8654	8481	8404	1.84	1.85	1.86	1.86	1.87
	17.0	9331	9145	9099	8917	8837	1.85	1.87	1.87	1.88	1.88
	22.0	9620	9428	9381	9193	9110	1.84	1.85	1.86	1.86	1.87
	27.0	9909	9711	9662	9469	9384	1.83	1.84	1.84	1.85	1.85
	32.0	10198	9994	9944	9745	9657	1.81	1.83	1.83	1.83	1.84
	37.0	10841	10624	10571	10359	10266	1.81	1.83	1.83	1.83	1.84
	42.0	12015	11774	11716	11481	11378	1.83	1.85	1.85	1.85	1.86
	44.6	12484	12235	12174	11930	11823	1.84	1.86	1.86	1.86	1.87
	47.0	13189	12925	12860	12603	12490	1.86	1.88	1.88	1.89	1.89
	52.0	14363	14076	14005	13725	13602	1.89	1.91	1.91	1.91	1.92
	57.0	15537	15226	15150	14847	14713	1.92	1.93	1.94	1.94	1.95
	62.0	16711	16377	16295	15969	15825	1.94	1.96	1.96	1.97	1.97
	64.4	17181	16837	16753	16418	16270	1.95	1.97	1.97	1.98	1.98
400	-13.0	6528	6398	6366	6238	6182	1.71	1.73	1.73	1.73	1.74
	0.0	8431	8262	8221	8056	7984	1.77	1.79	1.79	1.79	1.80
	5.0	9382	9194	9148	8965	8884	1.80	1.82	1.82	1.82	1.83
	14.0	11094	10872	10817	10601	10506	1.86	1.87	1.87	1.88	1.89
	17.0	11664	11431	11374	11146	11046	1.87	1.89	1.89	1.90	1.90
	22.0	12025	11785	11726	11491	11388	1.86	1.87	1.88	1.88	1.89
	27.0	12386	12138	12078	11836	11730	1.84	1.86	1.86	1.87	1.87
	32.0	12747	12492	12430	12181	12072	1.83	1.84	1.85	1.85	1.86
	37.0	13551	13280	13213	12949	12833	1.83	1.85	1.85	1.85	1.86
	42.0	15018	14718	14644	14352	14222	1.85	1.87	1.87	1.87	1.88
	44.6	15605	15293	15217	14913	14778	1.86	1.87	1.88	1.88	1.89
	47.0	16486	16156	16076	15754	15612	1.88	1.90	1.90	1.91	1.91
	52.0	17954	17595	17507	17156	17002	1.91	1.92	1.93	1.93	1.94
	57.0	19421	19033	18938	18559	18392	1.94	1.95	1.95	1.96	1.97
	62.0	20889	20471	20369	19961	19782	1.96	1.98	1.98	1.98	1.99
	64.4	21476	21046	20941	20522	20338	1.97	1.99	1.99	2.00	2.00
528	-13.0	8366	8199	8158	7995	7923	1.73	1.74	1.75	1.75	1.76
	0.0	10804	10588	10535	10324	10231	1.79	1.80	1.81	1.81	1.82
	5.0	12023	11783	11724	11489	11386	1.82	1.83	1.84	1.84	1.85
	14.0	14217	13933	13863	13586	13463	1.87	1.89	1.89	1.90	1.90
	17.0	14948	14649	14576	14285	14156	1.89	1.91	1.91	1.91	1.92
	22.0	15411	15103	15027	14727	14594	1.88	1.89	1.90	1.90	1.91
	27.0	15874	15556	15478	15169	15032	1.86	1.88	1.88	1.88	1.89
	32.0	16336	16010	15929	15611	15470	1.85	1.86	1.87	1.87	1.88
	37.0	17366	17019	16934	16595	16446	1.85	1.86	1.87	1.87	1.88
	42.0	19247	18862	18768	18392	18227	1.87	1.88	1.89	1.89	1.90
	44.6	19999	19599	19501	19111	18939	1.88	1.89	1.90	1.90	1.91
	47.0	21128	20705	20602	20190	20008	1.90	1.92	1.92	1.92	1.93
	52.0	23009	22548	22436	21987	21789	1.93	1.94	1.95	1.95	1.96
	57.0	24889	24392	24270	23784	23570	1.95	1.97	1.97	1.98	1.99
	62.0	26770	26235	26104	25581	25351	1.98	2.00	2.00	2.01	2.01
	64.4	27522	26972	26837	26300	26064	1.99	2.01	2.01	2.02	2.02
540	-13.0	8307	8141	8100	7938	7867	1.75	1.76	1.76	1.77	1.77
	0.0	10728	10513	10461	10252	10159	1.81	1.82	1.83	1.83	1.84
	5.0	11938	11699	11641	11408	11305	1.84	1.85	1.86	1.86	1.87
	14.0	14117	13834	13765	13490	13368	1.89	1.91	1.91	1.92	1.92
	17.0	14843	14546	14473	14184	14056	1.91	1.93	1.93	1.93	1.94
	22.0	15302	14996	14921	14623	14491	1.90	1.91	1.91	1.92	1.93
	27.0	15762	15446	15369	15062	14926	1.88	1.90	1.90	1.90	1.91
	32.0	16221	15896	15817	15501	15361	1.87	1.88	1.88	1.89	1.90
	37.0	17244	16899	16814	16478	16330	1.87	1.88	1.89	1.89	1.90
	42.0	19111	18729	18635	18262	18098	1.89	1.90	1.91	1.91	1.92
	44.6	19858	19461	19364	18976	18806	1.90	1.91	1.92	1.92	1.93
	47.0	20979	20559	20456	20047	19867	1.92	1.94	1.94	1.94	1.95
	52.0	22846	22389	22277	21832	21635	1.95	1.96	1.97	1.97	1.98
	57.0	24714	24219	24098	23616	23404	1.97	1.99	1.99	2.00	2.01
	62.0	26581	26049	25919	25401	25172	2.00	2.02	2.02	2.03	2.03
	64.4	27328	26781	26648	26115	25880	2.01	2.03	2.03	2.04	2.04

NOTE: Data highlighted in gray is extrapolated data and not actual test data.

Manufacturer reserves the right to change, at any time, specifications and designs without notice and without obligations.

HEATING PERFORMANCE NON-DUCTED

HEATING PERFORMANCE 27K

NON-DUCTED HEATING PERFORMANCE 27K

AIRFLOW (CFM)	OUTDOOR DB (°F)	HEATING PERFORMANCE AT INDOOR DRY BULB TEMPERATURE									
		TC : Total Heating Capacity (BTU/hr)					PI : Power Input (kW)				
		Indoor Conditions (DB °F)					Indoor Conditions (DB °F)				
		60.8	68.0	70.0	71.6	75.2	60.8	68.0	70.00	71.6	75.2
480	-13.0	6997	6857	6823	6687	6626	2.66	2.68	2.69	2.70	2.71
	0.0	8904	8726	8682	8508	8432	2.68	2.70	2.71	2.71	2.72
	5.0	9857	9660	9611	9419	9334	2.69	2.71	2.71	2.72	2.73
	14.0	11573	11341	11284	11059	10959	2.70	2.72	2.73	2.73	2.75
	17.0	12145	11902	11842	11605	11501	2.71	2.73	2.73	2.74	2.75
	22.0	12365	12117	12057	11816	11709	2.63	2.66	2.66	2.67	2.68
	27.0	12585	12333	12271	12026	11918	2.56	2.58	2.59	2.59	2.60
	32.0	12805	12549	12486	12236	12126	2.49	2.51	2.51	2.52	2.53
	37.0	14113	13831	13761	13486	13365	2.55	2.57	2.57	2.58	2.59
	42.0	17053	16712	16628	16296	16149	2.74	2.77	2.77	2.78	2.79
	44.6	18229	17864	17775	17420	17263	2.83	2.85	2.86	2.86	2.88
	47.0	19993	19593	19495	19105	18933	3.06	3.08	3.09	3.10	3.11
	52.0	22933	22475	22362	21915	21718	3.31	3.34	3.35	3.35	3.37
	57.0	25873	25356	25229	24725	24502	3.57	3.60	3.61	3.61	3.63
	62.0	28814	28237	28096	27534	27286	3.82	3.86	3.86	3.87	3.89
	64.4	29990	29390	29243	28658	28400	3.93	3.96	3.97	3.97	3.99
600	-13.0	8747	8572	8529	8358	8283	2.69	2.71	2.72	2.72	2.73
	0.0	11130	10907	10853	10635	10540	2.71	2.73	2.73	2.74	2.75
	5.0	12321	12075	12014	11774	11668	2.71	2.74	2.74	2.75	2.76
	14.0	14466	14176	14106	13823	13699	2.73	2.75	2.76	2.76	2.77
	17.0	15181	14877	14803	14507	14376	2.73	2.76	2.76	2.77	2.78
	22.0	15456	15147	15071	14769	14637	2.66	2.68	2.69	2.69	2.70
	27.0	15731	15416	15339	15032	14897	2.59	2.61	2.61	2.62	2.63
	32.0	16006	15686	15607	15295	15158	2.51	2.54	2.54	2.55	2.56
	37.0	17641	17288	17202	16858	16706	2.57	2.59	2.60	2.61	2.62
	42.0	21316	20890	20785	20370	20186	2.77	2.79	2.80	2.81	2.82
	44.6	22786	22331	22219	21775	21579	2.86	2.88	2.89	2.89	2.90
	47.0	24991	24492	24369	23882	23667	3.09	3.11	3.12	3.13	3.14
	52.0	28667	28093	27953	27394	27147	3.35	3.37	3.38	3.39	3.40
	57.0	32342	31695	31537	30906	30628	3.61	3.63	3.64	3.65	3.66
	62.0	36017	35297	35120	34418	34108	3.86	3.89	3.90	3.91	3.93
	64.4	37487	36737	36554	35823	35500	3.97	4.00	4.01	4.01	4.03
792	-13.0	11209	10985	10930	10712	10615	2.72	2.74	2.74	2.75	2.76
	0.0	14263	13978	13908	13630	13507	2.73	2.76	2.76	2.77	2.78
	5.0	15790	15474	15397	15089	14953	2.74	2.76	2.77	2.77	2.79
	14.0	18539	18168	18077	17715	17556	2.76	2.78	2.78	2.79	2.80
	17.0	19455	19066	18970	18591	18424	2.76	2.78	2.79	2.79	2.81
	22.0	19807	19411	19314	18928	18758	2.69	2.71	2.71	2.72	2.73
	27.0	20160	19757	19658	19265	19091	2.61	2.63	2.64	2.65	2.66
	32.0	20512	20102	20002	19602	19425	2.54	2.56	2.57	2.57	2.58
	37.0	22608	22156	22045	21604	21410	2.60	2.62	2.63	2.63	2.64
	42.0	27318	26772	26638	26105	25870	2.80	2.82	2.83	2.83	2.85
	44.6	29202	28618	28475	27905	27654	2.89	2.91	2.92	2.92	2.93
	47.0	32028	31387	31230	30606	30330	3.12	3.15	3.15	3.16	3.17
	52.0	36738	36003	35823	35107	34791	3.38	3.41	3.42	3.42	3.44
	57.0	41448	40619	40416	39607	39251	3.64	3.67	3.68	3.69	3.70
	62.0	46158	45235	45008	44108	43711	3.90	3.93	3.94	3.95	3.97
	64.4	48042	47081	46846	45909	45495	4.01	4.04	4.05	4.06	4.07
810	-13.0	11130	10908	10853	10636	10540	2.74	2.77	2.77	2.78	2.79
	0.0	14163	13879	13810	13534	13412	2.76	2.78	2.79	2.79	2.81
	5.0	15679	15365	15288	14983	14848	2.77	2.79	2.80	2.80	2.81
	14.0	18408	18040	17949	17590	17432	2.78	2.81	2.81	2.82	2.83
	17.0	19317	18931	18836	18460	18294	2.79	2.81	2.82	2.82	2.83
	22.0	19667	19274	19178	18794	18625	2.71	2.74	2.74	2.75	2.76
	27.0	20018	19617	19519	19129	18957	2.64	2.66	2.67	2.67	2.68
	32.0	20368	19960	19860	19463	19288	2.57	2.59	2.59	2.60	2.61
	37.0	22448	21999	21889	21452	21258	2.63	2.65	2.65	2.66	2.67
	42.0	27125	26583	26450	25921	25687	2.83	2.85	2.86	2.86	2.87
	44.6	28996	28416	28274	27708	27459	2.92	2.94	2.94	2.95	2.96
	47.0	31802	31166	31010	30390	30116	3.15	3.18	3.18	3.19	3.20
	52.0	36478	35749	35570	34859	34545	3.42	3.44	3.45	3.46	3.47
	57.0	41155	40332	40130	39328	38974	3.68	3.71	3.72	3.72	3.74
	62.0	45832	44915	44691	43797	43403	3.94	3.97	3.98	3.99	4.01
	64.4	47703	46749	46515	45584	45174	4.05	4.08	4.09	4.10	4.11

NOTE: Data highlighted in gray is extrapolated data and not actual test data.

Manufacturer reserves the right to change, at any time, specifications and designs without notice and without obligations.

HEATING PERFORMANCE NON-DUCTED

HEATING PERFORMANCE 36K

NON-DUCTED HEATING PERFORMANCE 36K

AIRFLOW (CFM)	OUTDOOR DB (°F)	HEATING PERFORMANCE AT INDOOR DRY BULB TEMPERATURE									
		TC : Total Heating Capacity (BTU/hr)					PI : Power Input (kW)				
		Indoor Conditions (DB °F)					Indoor Conditions (DB °F)				
		60.8	68.0	70.0	71.6	75.2	60.8	68.0	70.00	71.6	75.2
640	-13.0	9835	9639	9590	9399	9314	3.58	3.61	3.62	3.63	3.64
	0.0	12750	12495	12432	12183	12074	3.74	3.77	3.77	3.78	3.80
	5.0	14207	13923	13853	13576	13454	3.81	3.84	3.85	3.86	3.88
	14.0	16830	16493	16410	16082	15938	3.95	3.98	3.99	4.00	4.02
	17.0	17704	17350	17263	16918	16765	4.00	4.03	4.04	4.05	4.06
	22.0	18067	17706	17617	17265	17110	3.86	3.89	3.90	3.91	3.93
	27.0	18431	18062	17972	17612	17454	3.73	3.76	3.77	3.77	3.79
	32.0	18794	18418	18326	17960	17798	3.59	3.62	3.63	3.64	3.65
	37.0	21298	20872	20768	20353	20170	3.81	3.84	3.84	3.85	3.87
	42.0	27014	26474	26341	25815	25582	4.37	4.40	4.41	4.42	4.44
	44.6	29300	28714	28571	27999	27747	4.61	4.65	4.66	4.67	4.68
	47.0	32730	32075	31915	31276	30995	5.27	5.31	5.32	5.33	5.35
	52.0	38445	37676	37488	36738	36408	6.00	6.05	6.06	6.07	6.10
	57.0	44161	43278	43061	42200	41820	6.73	6.78	6.80	6.81	6.84
	62.0	49876	48879	48634	47662	47233	7.46	7.52	7.54	7.55	7.58
	64.4	52163	51119	50864	49847	49398	7.75	7.82	7.83	7.85	7.88
800	-13.0	12294	12048	11988	11748	11643	3.62	3.65	3.65	3.66	3.68
	0.0	15937	15618	15540	15229	15092	3.77	3.80	3.81	3.82	3.83
	5.0	17758	17403	17316	16970	16817	3.85	3.88	3.89	3.90	3.91
	14.0	21037	20616	20513	20103	19922	3.99	4.02	4.03	4.04	4.06
	17.0	22130	21687	21579	21147	20957	4.04	4.07	4.08	4.09	4.10
	22.0	22584	22132	22022	21581	21387	3.90	3.93	3.94	3.95	3.97
	27.0	23038	22578	22465	22015	21817	3.77	3.80	3.80	3.81	3.83
	32.0	23493	23023	22908	22450	22247	3.63	3.66	3.67	3.67	3.69
	37.0	26623	26091	25960	25441	25212	3.84	3.87	3.88	3.89	3.91
	42.0	33768	33092	32927	32268	31978	4.41	4.45	4.45	4.46	4.48
	44.6	36625	35893	35713	34999	34684	4.66	4.69	4.70	4.71	4.73
	47.0	40912	40094	39893	39095	38744	5.32	5.36	5.37	5.39	5.41
	52.0	48057	47095	46860	45923	45509	6.06	6.11	6.12	6.13	6.16
	57.0	55201	54097	53827	52750	52275	6.80	6.85	6.87	6.88	6.91
	62.0	62346	61099	60793	59577	59041	7.54	7.60	7.61	7.63	7.66
	64.4	65203	63899	63580	62308	61747	7.83	7.90	7.91	7.93	7.96
1056	-13.0	15756	15441	15363	15056	14921	3.65	3.68	3.69	3.70	3.71
	0.0	20424	20016	19916	19517	19342	3.81	3.84	3.85	3.86	3.87
	5.0	22758	22303	22192	21748	21552	3.89	3.92	3.93	3.94	3.95
	14.0	26960	26421	26289	25763	25531	4.03	4.07	4.07	4.08	4.10
	17.0	28360	27793	27654	27101	26857	4.08	4.11	4.12	4.13	4.15
	22.0	28943	28364	28222	27658	27409	3.94	3.97	3.98	3.99	4.01
	27.0	29525	28934	28790	28214	27960	3.80	3.83	3.84	3.85	3.87
	32.0	30107	29505	29357	28770	28511	3.67	3.70	3.70	3.71	3.73
	37.0	34119	33436	33269	32604	32310	3.88	3.91	3.92	3.93	3.95
	42.0	43275	42409	42197	41353	40981	4.45	4.49	4.50	4.51	4.53
	44.6	46937	45999	45769	44853	44450	4.70	4.74	4.75	4.76	4.78
	47.0	52431	51382	51125	50103	49652	5.37	5.42	5.43	5.44	5.46
	52.0	61587	60355	60053	58852	58323	6.12	6.17	6.18	6.20	6.22
	57.0	70743	69328	68982	67602	66993	6.87	6.92	6.94	6.95	6.98
	62.0	79899	78301	77910	76351	75664	7.61	7.67	7.69	7.71	7.74
	64.4	83562	81890	81481	79851	79133	7.91	7.98	7.99	8.01	8.04
1080	-13.0	15644	15332	15255	14950	14815	3.69	3.72	3.73	3.74	3.75
	0.0	20280	19874	19775	19379	19205	3.85	3.88	3.89	3.90	3.91
	5.0	22598	22146	22035	21594	21400	3.93	3.96	3.97	3.98	3.99
	14.0	26770	26234	26103	25581	25351	4.07	4.11	4.11	4.12	4.14
	17.0	28160	27597	27459	26910	26668	4.12	4.15	4.16	4.17	4.19
	22.0	28738	28164	28023	27462	27215	3.98	4.01	4.02	4.03	4.05
	27.0	29316	28730	28586	28015	27763	3.84	3.87	3.88	3.89	3.90
	32.0	29894	29297	29150	28567	28310	3.70	3.73	3.74	3.75	3.76
	37.0	33878	33200	33034	32374	32082	3.92	3.95	3.96	3.97	3.98
	42.0	42969	42110	41899	41061	40692	4.50	4.54	4.54	4.55	4.57
	44.6	46606	45674	45445	44536	44136	4.75	4.79	4.80	4.81	4.83
	47.0	52061	51020	50764	49749	49301	5.43	5.47	5.48	5.49	5.52
	52.0	61152	59929	59629	58437	57911	6.18	6.23	6.24	6.26	6.28
	57.0	70244	68839	68494	67125	66520	6.94	6.99	7.01	7.02	7.05
	62.0	79335	77748	77359	75812	75130	7.69	7.75	7.77	7.78	7.81
	64.4	82971	81312	80906	79287	78574	7.99	8.06	8.07	8.09	8.12

Manufacturer reserves the right to change, at any time, specifications and designs without notice and without obligations.

HEATING PERFORMANCE NON-DUCTED

HEATING PERFORMANCE 48K

NON-DUCTED HEATING PERFORMANCE 48K

AIRFLOW (CFM)	OUTDOOR DB (°F)	HEATING PERFORMANCE AT INDOOR DRY BULB TEMPERATURE									
		TC : Total Heating Capacity (BTU/hr)					PI : Power Input (kW)				
		Indoor Conditions (DB °F)					Indoor Conditions (DB °F)				
		60.8	68.0	70.0	71.6	75.2	60.8	68.0	70.00	71.6	75.2
800	-13.0	19537	19146	19050	18669	18501	5.71	5.75	5.76	5.78	5.80
	0.0	20562	20151	20050	19649	19472	5.47	5.52	5.53	5.54	5.56
	5.0	21074	20653	20549	20138	19957	5.36	5.40	5.41	5.42	5.44
	14.0	21996	21557	21449	21020	20831	5.15	5.19	5.20	5.21	5.23
	17.0	22304	21858	21749	21314	21122	5.08	5.12	5.13	5.14	5.16
	22.0	23183	22719	22606	22154	21954	4.96	5.00	5.01	5.02	5.04
	27.0	24062	23581	23463	22994	22787	4.83	4.87	4.88	4.89	4.91
	32.0	24941	24443	24320	23834	23620	4.71	4.75	4.76	4.77	4.79
	37.0	26679	26146	26015	25494	25265	4.74	4.78	4.79	4.80	4.82
	42.0	29704	29110	28965	28385	28130	4.94	4.98	4.99	5.00	5.02
	44.6	30914	30296	30145	29542	29276	5.03	5.07	5.08	5.09	5.11
	47.0	32730	32075	31915	31276	30995	5.27	5.31	5.32	5.33	5.35
	52.0	35755	35040	34865	34167	33860	5.53	5.57	5.58	5.60	5.62
	57.0	38780	38005	37815	37058	36725	5.79	5.84	5.85	5.86	5.88
	62.0	41805	40969	40764	39949	39590	6.05	6.10	6.11	6.13	6.15
	64.4	43016	42155	41944	41106	40736	6.16	6.21	6.22	6.23	6.26
1000	-13.0	24421	23933	23813	23337	23127	5.76	5.81	5.82	5.83	5.86
	0.0	25702	25188	25062	24561	24340	5.53	5.57	5.59	5.60	5.62
	5.0	26343	25816	25687	25173	24946	5.41	5.46	5.47	5.48	5.50
	14.0	27496	26946	26811	26275	26038	5.20	5.24	5.25	5.26	5.29
	17.0	27880	27322	27186	26642	26402	5.13	5.17	5.18	5.19	5.21
	22.0	28979	28399	28257	27692	27443	5.01	5.05	5.06	5.07	5.09
	27.0	30078	29476	29329	28742	28484	4.88	4.92	4.93	4.94	4.96
	32.0	31177	30553	30401	29793	29524	4.76	4.80	4.81	4.82	4.84
	37.0	33349	32682	32518	31868	31581	4.79	4.83	4.84	4.85	4.87
	42.0	37130	36388	36206	35482	35162	4.99	5.03	5.04	5.05	5.07
	44.6	38643	37870	37681	36927	36595	5.08	5.12	5.13	5.14	5.16
	47.0	40912	40094	39893	39095	38744	5.32	5.36	5.37	5.38	5.41
	52.0	44694	43800	43581	42709	42325	5.58	5.63	5.64	5.65	5.68
	57.0	48475	47506	47268	46323	45906	5.85	5.90	5.91	5.92	5.94
	62.0	52257	51212	50956	49936	49487	6.11	6.16	6.18	6.19	6.21
	64.4	53769	52694	52431	51382	50919	6.22	6.27	6.28	6.30	6.32
1320	-13.0	31297	30671	30518	29907	29638	5.82	5.87	5.88	5.89	5.92
	0.0	32939	32280	32119	31476	31193	5.59	5.63	5.64	5.65	5.68
	5.0	33760	33084	32919	32261	31970	5.47	5.51	5.52	5.53	5.56
	14.0	35237	34532	34360	33672	33369	5.25	5.30	5.31	5.32	5.34
	17.0	35730	35015	34840	34143	33836	5.18	5.22	5.24	5.25	5.27
	22.0	37138	36395	36213	35489	35170	5.06	5.10	5.11	5.12	5.14
	27.0	38546	37775	37587	36835	36503	4.93	4.97	4.98	4.99	5.01
	32.0	39955	39156	38960	38181	37837	4.81	4.85	4.86	4.87	4.89
	37.0	42738	41884	41674	40841	40473	4.84	4.88	4.89	4.90	4.92
	42.0	47585	46633	46400	45472	45063	5.04	5.08	5.10	5.11	5.13
	44.6	49523	48533	48290	47324	46898	5.13	5.17	5.19	5.20	5.22
	47.0	52431	51382	51125	50103	49652	5.37	5.42	5.43	5.44	5.46
	52.0	57277	56132	55851	54734	54241	5.64	5.69	5.70	5.71	5.73
	57.0	62124	60881	60577	59365	58831	5.91	5.96	5.97	5.98	6.00
	62.0	66970	65630	65302	63996	63420	6.18	6.23	6.24	6.25	6.28
	64.4	68908	67530	67193	65849	65256	6.28	6.33	6.35	6.36	6.38
1350	-13.0	31076	30455	30302	29696	29429	5.88	5.93	5.94	5.95	5.98
	0.0	32706	32052	31892	31254	30973	5.64	5.69	5.70	5.71	5.73
	5.0	33521	32851	32687	32033	31745	5.52	5.57	5.58	5.59	5.61
	14.0	34988	34289	34117	33435	33134	5.31	5.35	5.36	5.37	5.39
	17.0	35477	34768	34594	33902	33597	5.23	5.28	5.29	5.30	5.32
	22.0	36876	36138	35958	35238	34921	5.11	5.15	5.16	5.17	5.19
	27.0	38274	37509	37321	36575	36246	4.98	5.02	5.03	5.04	5.06
	32.0	39673	38879	38685	37911	37570	4.86	4.89	4.90	4.91	4.93
	37.0	42437	41588	41380	40552	40187	4.89	4.93	4.94	4.95	4.97
	42.0	47249	46304	46072	45151	44744	5.09	5.14	5.15	5.16	5.18
	44.6	49173	48190	47949	46990	46567	5.18	5.23	5.24	5.25	5.27
	47.0	52061	51020	50764	49749	49301	5.43	5.47	5.48	5.49	5.52
	52.0	56873	55735	55457	54348	53858	5.70	5.74	5.75	5.77	5.79
	57.0	61685	60451	60149	58946	58415	5.97	6.02	6.03	6.04	6.06
	62.0	66497	65167	64841	63544	62972	6.24	6.29	6.30	6.31	6.34
	64.4	68422	67053	66718	65384	64795	6.35	6.40	6.41	6.42	6.45

NOTE: Data highlighted in gray is extrapolated data and not actual test data.

Manufacturer reserves the right to change, at any time, specifications and designs without notice and without obligations.

APPLICATION DATA

Unit Selection

When selecting a variable speed system, match the system capacity range to the anticipated load range. Since a variable speed system can accommodate a wide range of loads it is important to understand the percentage of time that the system will be required to run at both the maximum and the minimum load points. This differential is most evident when a residential application is compared with a commercial application.

Generally there is more load diversification in the residential application (shifting from a low load to a high load). The commercial application tends to be steadier during the normal day time hours, and will drop to low load levels after normal business hours. If it is anticipated that the system needs to run at the maximum load point for the majority of the time, the next larger system capacity should be selected.

The Application table below provides a guideline for selecting the appropriate size for the application.

NOTE: See the note on page 39 regarding selection of 30K or 36K Air Handling Units (AHUs) in multi-zone applications.

NOTE: Refer to the most current version of the compatibility chart for a list of the approved indoor units for each outdoor size.

	NO. ZONES	COOLING CAPACITY (BTU/H)					HEATING CAPACITY (BTU/H)				
		ZONE 1	ZONE 2	ZONE 3	ZONE 4	ZONE 5	ZONE 1	ZONE 2	ZONE 3	ZONE 4	ZONE 5
18K											
6+6	2 - Zone	6,000	6,000				6,300	6,300			
6+9		6,000	9,000				6,300	9,500			
6+12		6,000	12,000				6,300	12,700			
9+9		9,000	9,000				9,500	9,500			
9+12		9,000	12,000				9,500	12,700			
12+12		11,200	11,200				11,800	11,800			
27K											
6+6	2 - Zone	8,000	8,000				8,200	8,200			
6+9		6,400	9,500				6,500	9,700			
6+12		6,000	12,000				6,100	12,300			
6+18		6,000	18,000				6,100	18,400			
9+9		9,000	9,000				9,200	9,200			
9+12		9,000	12,000				9,200	12,300			
9+18		9,000	18,000				9,200	18,400			
12+12		12,000	12,000				12,300	12,300			
12+18		12,000	18,000				12,300	18,400			
18+18		15,600	15,600				15,900	15,900			
6+6+6	3 - Zone	6,000	6,000	6,000			6,100	6,100	6,100		
6+6+9		6,000	6,000	9,000			6,100	6,100	9,200		
6+6+12		6,000	6,000	12,000			6,100	6,100	12,300		
6+6+18		6,000	6,000	18,000			6,100	6,100	18,400		
6+9+9		6,000	9,000	9,000			6,100	9,200	9,200		
6+9+12		6,000	9,000	12,000			6,100	9,200	12,300		
6+9+18		5,700	8,500	17,000			5,800	8,700	17,400		
6+12+12		6,000	12,000	12,000			6,100	12,300	12,300		
9+9+9		9,000	9,000	9,000			9,200	9,200	9,200		
9+9+12		9,000	9,000	12,000			9,200	9,200	12,300		
9+9+18		7,800	7,800	15,600			8,000	8,000	15,900		
9+12+12		8,500	11,400	11,400			8,700	11,600	11,600		
12+12+12		10,400	10,400	10,400			10,600	10,600	10,600		
36											
6+9	2 - Zone	7,900	11,900				7,900	11,900			
6+12		6,600	13,200				6,600	13,200			
6+18		6,000	18,000				6,000	18,000			
6+24		6,000	24,000				6,000	24,000			
9+9		9,900	9,900				9,900	9,900			
9+12		9,000	12,000				9,000	12,000			
9+18		9,000	18,000				9,000	18,000			
9+24		9,000	24,000				9,000	24,000			
12+12		12,000	12,000				12,000	12,000			
12+18		12,000	18,000				12,000	18,000			
12+24		12,000	24,000				12,000	24,000			
18+18		18,000	18,000				18,000	18,000			

	NO. ZONES	COOLING CAPACITY (BTU/H)					HEATING CAPACITY (BTU/H)				
		ZONE 1	ZONE 2	ZONE 3	ZONE 4	ZONE 5	ZONE 1	ZONE 2	ZONE 3	ZONE 4	ZONE 5
6+6+6	3 - Zone	6,600	6,600	6,600			6,600	6,600	6,600		
6+6+9		6,000	6,000	9,000			6,000	6,000	9,000		
6+6+12		6,000	6,000	12,000			6,000	6,000	12,000		
6+6+18		6,000	6,000	18,000			6,000	6,000	18,000		
6+6+24		6,000	6,000	24,000			6,000	6,000	24,000		
6+9+9		6,000	9,000	9,000			6,000	9,000	9,000		
6+9+12		6,000	9,000	12,000			6,000	9,000	12,000		
6+9+18		6,000	9,000	18,000			6,000	9,000	18,000		
6+9+24		6,000	9,000	24,000			6,000	9,000	24,000		
6+12+12		6,000	12,000	12,000			6,000	12,000	12,000		
6+12+18		6,000	12,000	18,000			6,000	12,000	18,000		
6+12+24		5,700	11,400	22,800			5,700	11,400	22,800		
6+18+18		5,700	17,100	17,100			5,700	17,100	17,100		
6+18+24		4,900	14,800	19,700			4,900	14,800	19,700		
9+9+9		9,000	9,000	9,000			9,000	9,000	9,000		
9+9+12		9,000	9,000	12,000			9,000	9,000	12,000		
9+9+18		9,000	9,000	18,000			9,000	9,000	18,000		
9+9+24		8,600	8,600	17,100			8,600	8,600	17,100		
9+12+12		9,000	12,000	12,000			9,000	12,000	12,000		
9+12+18		9,000	12,000	18,000			9,000	12,000	18,000		
9+12+24		8,000	10,600	5,300			8,000	10,600	5,300		
9+18+18		8,000	16,000	5,300			8,000	16,000	5,300		
12+12+12		12,000	12,000	12,000			12,000	12,000	12,000		
12+12+18		11,300	11,300	16,900			11,300	11,300	16,900		
12+18+18		9,900	14,800	14,800			9,900	14,800	14,800		
12+12+24		9,900	9,900	19,700			9,900	9,900	19,700		
6+6+6+6	4 - Zone	6,000	6,000	6,000	6,000		6,000	6,000	6,000	6,000	
6+6+6+9		6,000	6,000	6,000	9,000		6,000	6,000	6,000	9,000	
6+6+6+12		6,000	6,000	6,000	12,000		6,000	6,000	6,000	12,000	
6+6+6+18		6,000	6,000	6,000	18,000		6,000	6,000	6,000	18,000	
6+6+6+24		5,700	5,700	5,700	22,800		5,700	5,700	5,700	22,800	
6+6+9+9		6,000	6,000	9,000	9,000		6,000	6,000	9,000	9,000	
6+6+9+12		6,000	6,000	9,000	12,000		6,000	6,000	9,000	12,000	
6+6+9+18		6,000	6,000	9,000	18,000		6,000	6,000	9,000	18,000	
6+6+9+24		5,300	5,300	7,900	21,000		5,300	5,300	7,900	21,000	
6+6+12+12		6,000	6,000	12,000	12,000		6,000	6,000	12,000	12,000	
6+6+12+18		5,600	5,600	11,300	16,900		5,600	5,600	11,300	16,900	
6+6+12+24		4,900	4,900	9,900	19,700		4,900	4,900	9,900	19,700	
6+6+18+18		4,900	4,900	14,800	14,800		4,900	4,900	14,800	14,800	
6+9+9+9		6,000	9,000	9,000	9,000		6,000	9,000	9,000	9,000	
6+9+9+12		6,000	9,000	9,000	12,000		6,000	9,000	9,000	12,000	
6+9+9+18		5,600	8,500	8,500	16,900		5,600	8,500	8,500	16,900	
6+9+9+24		4,900	7,400	7,400	19,700		4,900	7,400	7,400	19,700	
6+12+12+12		5,600	11,300	11,300	11,300		5,600	11,300	11,300	11,300	
6+12+12+18		4,900	9,900	9,900	14,800		4,900	9,900	9,900	14,800	
9+9+9+9		9,000	9,000	9,000	9,000		9,000	9,000	9,000	9,000	
9+9+9+12		9,000	9,000	9,000	12,000		9,000	9,000	9,000	12,000	
9+9+9+18		7,900	7,900	7,900	15,800		7,900	7,900	7,900	15,800	
9+9+12+12		8,500	8,500	11,300	11,300		8,500	8,500	11,300	11,300	
9+9+12+18		7,400	7,400	9,900	14,800		7,400	7,400	9,900	14,800	
9+12+12+12		7,900	10,500	10,500	10,500		7,900	10,500	10,500	10,500	
12+12+12+12		9,900	9,900	9,900	9,900		9,900	9,900	9,900	9,900	

Manufacturer reserves the right to change, at any time, specifications and designs without notice and without obligations.

	NO. ZONES	COOLING CAPACITY (BTU/H)					HEATING CAPACITY (BTU/H)				
		ZONE 1	ZONE 2	ZONE 3	ZONE 4	ZONE 5	ZONE 1	ZONE 2	ZONE 3	ZONE 4	ZONE 5
48K											
6+30	2 - Zone	6,000	30,000				6,000	30,000			
6+36		6,000	36,000				6,000	36,000			
9+18		10,600	21,100				10,600	21,100			
9+24		9,000	24,000				9,000	24,000			
9+30		9,000	30,000				9,000	30,000			
9+36		9,000	36,000				9,000	36,000			
12+12		15,900	15,900				15,900	15,900			
12+18		12,700	19,000				12,700	19,000			
12+24		12,000	24,000				12,000	24,000			
12+30		12,000	30,000				12,000	30,000			
12+36		12,000	36,000				12,000	36,000			
18+18		18,000	18,000				18,000	18,000			
18+24		18,000	24,000				18,000	24,000			
18+30		18,000	30,000				18,000	30,000			
18+36		18,000	36,000				18,000	36,000			
24+24		24,000	24,000				24,000	24,000			
24+30		24,000	30,000				24,000	30,000			
24+36		24,000	36,000				24,000	36,000			
30+30		30,000	30,000				30,000	30,000			

Manufacturer reserves the right to change, at any time, specifications and designs without notice and without obligations.

	NO. ZONES	COOLING CAPACITY (BTU/H)					HEATING CAPACITY (BTU/H)				
		ZONE 1	ZONE 2	ZONE 3	ZONE 4	ZONE 5	ZONE 1	ZONE 2	ZONE 3	ZONE 4	ZONE 5
6+6+24		6,000	6,000	24,000			6,000	6,000	24,000		
6+6+30		6,000	6,000	30,000			6,000	6,000	30,000		
6+6+36		6,000	6,000	36,000			6,000	6,000	36,000		
6+9+12		7,000	10,600	14,100			7,000	10,600	14,100		
6+9+18		6,000	9,000	18,000			6,000	9,000	18,000		
6+9+24		6,000	9,000	24,000			6,000	9,000	24,000		
6+9+30		6,000	9,000	30,000			6,000	9,000	30,000		
6+9+36		6,000	9,000	36,000			6,000	9,000	36,000		
6+12+18		6,000	12,000	18,000			6,000	12,000	18,000		
6+12+24		6,000	12,000	24,000			6,000	12,000	24,000		
6+12+30		6,000	12,000	30,000			6,000	12,000	30,000		
6+12+36		6,000	12,000	36,000			6,000	12,000	36,000		
6+18+18		6,000	18,000	18,000			6,000	18,000	18,000		
6+18+24		6,000	18,000	24,000			6,000	18,000	24,000		
6+18+30		6,000	18,000	30,000			6,000	18,000	30,000		
6+18+36		6,000	18,000	36,000			6,000	18,000	36,000		
6+24+24		6,000	24,000	24,000			6,000	24,000	24,000		
6+24+30		6,000	24,000	30,000			6,000	24,000	30,000		
9+9+9		10,600	10,600	10,600			10,600	10,600	10,600		
9+9+12		9,500	9,500	12,700			9,500	9,500	12,700		
9+9+18		9,000	9,000	18,000			9,000	9,000	18,000		
9+9+24		9,000	9,000	24,000			9,000	9,000	24,000		
9+9+30	3 - Zone	9,000	9,000	30,000			9,000	9,000	30,000		
9+9+36		9,000	9,000	36,000			9,000	9,000	36,000		
9+12+12		9,000	12,000	12,000			9,000	12,000	12,000		
9+12+18		9,000	12,000	18,000			9,000	12,000	18,000		
9+12+24		9,000	12,000	24,000			9,000	12,000	24,000		
9+12+30		9,000	12,000	30,000			9,000	12,000	30,000		
9+12+36		9,000	12,000	36,000			9,000	12,000	36,000		
9+18+18		9,000	18,000	18,000			9,000	18,000	18,000		
9+18+24		9,000	18,000	24,000			9,000	18,000	24,000		
9+18+30		9,000	18,000	30,000			9,000	18,000	30,000		
9+18+36		9,000	18,000	36,000			9,000	18,000	36,000		
9+24+24		9,000	24,000	24,000			9,000	24,000	24,000		
12+12+12		12,000	12,000	12,000			12,000	12,000	12,000		
12+12+18		12,000	12,000	18,000			12,000	12,000	18,000		
12+12+24		12,000	12,000	24,000			12,000	12,000	24,000		
12+12+30		12,000	12,000	30,000			12,000	12,000	30,000		
12+12+36		12,000	12,000	36,000			12,000	12,000	36,000		
12+18+18		12,000	16,500	16,500			12,000	16,500	16,500		
12+18+24		12,000	18,000	24,000			12,000	18,000	24,000		
12+18+30		12,000	18,000	30,000			12,000	18,000	30,000		
12+24+24		12,000	24,000	24,000			12,000	24,000	24,000		
18+18+18		18,000	18,000	18,000			18,000	18,000	18,000		
18+18+24		18,000	18,000	24,000			18,000	18,000	24,000		

Manufacturer reserves the right to change, at any time, specifications and designs without notice and without obligations.

	NO. ZONES	COOLING CAPACITY (BTU/H)					HEATING CAPACITY (BTU/H)				
		ZONE 1	ZONE 2	ZONE 3	ZONE 4	ZONE 5	ZONE 1	ZONE 2	ZONE 3	ZONE 4	ZONE 5
6+6+6+18		6,000	6,000	6,000	18,000		6,000	6,000	6,000	18,000	
6+6+6+24		6,000	6,000	6,000	24,000		6,000	6,000	6,000	24,000	
6+6+6+30		6,000	6,000	6,000	30,000		6,000	6,000	6,000	30,000	
6+6+6+36		6,000	6,000	6,000	36,000		6,000	6,000	6,000	36,000	
6+6+9+12		6,000	6,000	9,000	12,000		6,000	6,000	9,000	12,000	
6+6+9+18		6,000	6,000	9,000	18,000		6,000	6,000	9,000	18,000	
6+6+9+24		6,000	6,000	9,000	24,000		6,000	6,000	9,000	24,000	
6+6+9+30		6,000	6,000	9,000	30,000		6,000	6,000	9,000	30,000	
6+6+9+36		6,000	6,000	9,000	36,000		6,000	6,000	9,000	36,000	
6+6+12+12		6,000	6,000	12,000	12,000		6,000	6,000	12,000	12,000	
6+6+12+18		6,000	6,000	12,000	18,000		6,000	6,000	12,000	18,000	
6+6+12+24		6,000	6,000	12,000	24,000		6,000	6,000	12,000	24,000	
6+6+12+30		6,000	6,000	12,000	30,000		6,000	6,000	12,000	30,000	
6+6+12+36		6,000	6,000	12,000	36,000		6,000	6,000	12,000	36,000	
6+6+18+18		6,000	6,000	18,000	18,000		6,000	6,000	18,000	18,000	
6+6+18+24		6,000	6,000	18,000	24,000		6,000	6,000	18,000	24,000	
6+6+18+30		6,000	6,000	18,000	30,000		6,000	6,000	18,000	30,000	
6+6+24+24		6,000	6,000	24,000	24,000		6,000	6,000	24,000	24,000	
6+9+9+9		6,000	9,000	9,000	9,000		6,000	9,000	9,000	9,000	
6+9+9+12		6,000	9,000	9,000	12,000		6,000	9,000	9,000	12,000	
6+9+9+18		6,000	9,000	9,000	18,000		6,000	9,000	9,000	18,000	
6+9+9+24		6,000	9,000	9,000	24,000		6,000	9,000	9,000	24,000	
6+9+9+30		6,000	9,000	9,000	30,000		6,000	9,000	9,000	30,000	
6+9+9+36		6,000	9,000	9,000	36,000		6,000	9,000	9,000	36,000	
6+9+12+12		6,000	9,000	12,000	12,000		6,000	9,000	12,000	12,000	
6+9+12+18		6,000	9,000	12,000	18,000		6,000	9,000	12,000	18,000	
6+9+12+24		6,000	9,000	12,000	24,000		6,000	9,000	12,000	24,000	
6+9+12+30		6,000	9,000	12,000	30,000		6,000	9,000	12,000	30,000	
6+9+12+36		6,000	9,000	12,000	36,000		6,000	9,000	12,000	36,000	
6+9+18+18		6,000	9,000	18,000	18,000		6,000	9,000	18,000	18,000	
6+9+18+24	4-Zone	6,000	9,000	18,000	24,000		6,000	9,000	18,000	24,000	
6+9+18+30		6,000	9,000	18,000	30,000		6,000	9,000	18,000	30,000	
6+9+24+24		6,000	9,000	24,000	24,000		6,000	9,000	24,000	24,000	
6+12+12+12		6,000	12,000	12,000	12,000		6,000	12,000	12,000	12,000	
6+12+12+18		6,000	12,000	12,000	18,000		6,000	12,000	12,000	18,000	
6+12+12+24		6,000	12,000	12,000	24,000		6,000	12,000	12,000	24,000	
6+12+12+30		6,000	12,000	12,000	30,000		6,000	12,000	12,000	30,000	
6+12+18+18		6,000	12,000	18,000	18,000		6,000	12,000	18,000	18,000	
6+12+18+24		6,000	12,000	18,000	24,000		6,000	12,000	18,000	24,000	
6+18+18+18		6,000	18,000	18,000	18,000		6,000	18,000	18,000	18,000	
9+9+9+9		9,000	9,000	9,000	9,000		9,000	9,000	9,000	9,000	
9+9+9+12		9,000	9,000	9,000	12,000		9,000	9,000	9,000	12,000	
9+9+9+18		9,000	9,000	9,000	18,000		9,000	9,000	9,000	18,000	
9+9+9+24		9,000	9,000	9,000	24,000		9,000	9,000	9,000	24,000	
9+9+9+30		9,000	9,000	9,000	30,000		9,000	9,000	9,000	30,000	
9+9+9+36		9,000	9,000	9,000	36,000		9,000	9,000	9,000	36,000	
9+9+12+12		9,000	9,000	12,000	12,000		9,000	9,000	12,000	12,000	
9+9+12+18		9,000	9,000	12,000	18,000		9,000	9,000	12,000	18,000	
9+9+12+24		9,000	9,000	12,000	24,000		9,000	9,000	12,000	24,000	
9+9+12+30		9,000	9,000	12,000	30,000		9,000	9,000	12,000	30,000	
9+9+18+18		9,000	9,000	18,000	18,000		9,000	9,000	18,000	18,000	
9+9+18+24		9,000	9,000	18,000	24,000		9,000	9,000	18,000	24,000	
9+12+12+12		9,000	12,000	12,000	12,000		9,000	12,000	12,000	12,000	
9+12+12+18		9,000	12,000	12,000	18,000		9,000	12,000	12,000	18,000	
9+12+12+24		9,000	12,000	12,000	24,000		9,000	12,000	12,000	24,000	
9+12+18+18		9,000	12,000	18,000	18,000		9,000	12,000	18,000	18,000	
9+18+18+18		9,000	18,000	18,000	18,000		9,000	18,000	18,000	18,000	
12+12+12+12		12,000	12,000	12,000	12,000		12,000	12,000	12,000	12,000	
12+12+12+18		12,000	12,000	12,000	18,000		12,000	12,000	12,000	18,000	
12+12+12+24		12,000	12,000	12,000	24,000		12,000	12,000	12,000	24,000	
12+12+18+18		12,000	12,000	18,000	18,000		12,000	12,000	18,000	18,000	

Manufacturer reserves the right to change, at any time, specifications and designs without notice and without obligations.

	NO. ZONES	COOLING CAPACITY (BTU/H)					HEATING CAPACITY (BTU/H)				
		ZONE 1	ZONE 2	ZONE 3	ZONE 4	ZONE 5	ZONE 1	ZONE 2	ZONE 3	ZONE 4	ZONE 5
6+6+6+6+6		6,400	6,400	6,400	6,400	6,400	6,400	6,400	6,400	6,400	6,400
6+6+6+6+9		6,000	6,000	6,000	6,000	9,000	6,000	6,000	6,000	6,000	9,000
6+6+6+6+12		6,000	6,000	6,000	6,000	12,000	6,000	6,000	6,000	6,000	12,000
6+6+6+6+18		6,000	6,000	6,000	6,000	18,000	6,000	6,000	6,000	6,000	18,000
6+6+6+6+24		6,000	6,000	6,000	6,000	24,000	6,000	6,000	6,000	6,000	24,000
6+6+6+6+30		6,000	6,000	6,000	6,000	30,000	6,000	6,000	6,000	6,000	30,000
6+6+6+6+36		6,000	6,000	6,000	6,000	36,000	6,000	6,000	6,000	6,000	36,000
6+6+6+9+9		6,000	6,000	6,000	9,000	9,000	6,000	6,000	6,000	9,000	9,000
6+6+6+9+12		6,000	6,000	6,000	9,000	12,000	6,000	6,000	6,000	9,000	12,000
6+6+6+9+18		6,000	6,000	6,000	9,000	18,000	6,000	6,000	6,000	9,000	18,000
6+6+6+9+24		6,000	6,000	6,000	9,000	24,000	6,000	6,000	6,000	9,000	24,000
6+6+6+9+30		6,000	6,000	6,000	9,000	30,000	6,000	6,000	6,000	9,000	30,000
6+6+6+9+36		6,000	6,000	6,000	9,000	36,000	6,000	6,000	6,000	9,000	36,000
6+6+6+12+12		6,000	6,000	6,000	12,000	12,000	6,000	6,000	6,000	12,000	12,000
6+6+6+12+18		6,000	6,000	6,000	12,000	18,000	6,000	6,000	6,000	12,000	18,000
6+6+6+12+24		6,000	6,000	6,000	12,000	24,000	6,000	6,000	6,000	12,000	24,000
6+6+6+12+30		6,000	6,000	6,000	12,000	30,000	6,000	6,000	6,000	12,000	30,000
6+6+6+18+18		6,000	6,000	6,000	18,000	18,000	6,000	6,000	6,000	18,000	18,000
6+6+6+18+24		6,000	6,000	6,000	18,000	24,000	6,000	6,000	6,000	18,000	24,000
6+6+9+9+9		6,000	6,000	9,000	9,000	9,000	6,000	6,000	9,000	9,000	9,000
6+6+9+9+12		6,000	6,000	9,000	9,000	12,000	6,000	6,000	9,000	9,000	12,000
6+6+9+9+18		6,000	6,000	9,000	9,000	18,000	6,000	6,000	9,000	9,000	18,000
6+6+9+9+24		6,000	6,000	9,000	9,000	24,000	6,000	6,000	9,000	9,000	24,000
6+6+9+9+30		6,000	6,000	9,000	9,000	30,000	6,000	6,000	9,000	9,000	30,000
6+6+9+12+12		6,000	6,000	9,000	12,000	12,000	6,000	6,000	9,000	12,000	12,000
6+6+9+12+18		6,000	6,000	9,000	12,000	18,000	6,000	6,000	9,000	12,000	18,000
6+6+9+12+24		6,000	6,000	9,000	12,000	24,000	6,000	6,000	9,000	12,000	24,000
6+6+9+12+30		6,000	6,000	9,000	12,000	30,000	6,000	6,000	9,000	12,000	30,000
6+6+9+18+18		6,000	6,000	9,000	18,000	18,000	6,000	6,000	9,000	18,000	18,000
6+6+9+18+24		6,000	6,000	9,000	18,000	24,000	6,000	6,000	9,000	18,000	24,000
6+6+12+12+12	5-Zone	6,000	6,000	12,000	12,000	12,000	6,000	6,000	12,000	12,000	12,000
6+6+12+12+18		6,000	6,000	12,000	12,000	18,000	6,000	6,000	12,000	12,000	18,000
6+6+12+12+24		6,000	6,000	12,000	12,000	24,000	6,000	6,000	12,000	12,000	24,000
6+6+12+18+18		6,000	6,000	12,000	18,000	18,000	6,000	6,000	12,000	18,000	18,000
6+9+9+9+9		6,000	9,000	9,000	9,000	9,000	6,000	9,000	9,000	9,000	9,000
6+9+9+9+12		6,000	9,000	9,000	9,000	12,000	6,000	9,000	9,000	9,000	12,000
6+9+9+9+18		6,000	9,000	9,000	9,000	18,000	6,000	9,000	9,000	9,000	18,000
6+9+9+9+24		6,000	9,000	9,000	9,000	24,000	6,000	9,000	9,000	9,000	24,000
6+9+9+9+30		6,000	9,000	9,000	9,000	24,000	6,000	9,000	9,000	9,000	24,000
6+9+9+12+12		6,000	9,000	9,000	12,000	12,000	6,000	9,000	9,000	12,000	12,000
6+9+9+12+18		6,000	9,000	9,000	12,000	18,000	6,000	9,000	9,000	12,000	18,000
6+9+9+12+24		6,000	9,000	9,000	12,000	24,000	6,000	9,000	9,000	12,000	24,000
6+9+9+18+18		6,000	9,000	9,000	18,000	18,000	6,000	9,000	9,000	18,000	18,000
6+9+12+12+12		6,000	9,000	12,000	12,000	12,000	6,000	9,000	12,000	12,000	12,000
6+9+12+12+18		6,000	9,000	12,000	12,000	18,000	6,000	9,000	12,000	12,000	18,000
6+9+12+12+24		6,000	9,000	12,000	12,000	24,000	6,000	9,000	12,000	12,000	24,000
6+9+12+18+18		6,000	9,000	12,000	18,000	18,000	6,000	9,000	12,000	18,000	18,000
6+12+12+12+12		6,000	12,000	12,000	12,000	12,000	6,000	12,000	12,000	12,000	12,000
6+12+12+12+18		6,000	12,000	12,000	12,000	18,000	6,000	12,000	12,000	12,000	18,000
9+9+9+9+9		9,000	9,000	9,000	9,000	9,000	9,000	9,000	9,000	9,000	9,000
9+9+9+9+12		9,000	9,000	9,000	9,000	12,000	9,000	9,000	9,000	9,000	12,000
9+9+9+9+18		9,000	9,000	9,000	9,000	18,000	9,000	9,000	9,000	9,000	18,000
9+9+9+9+24		9,000	9,000	9,000	9,000	24,000	9,000	9,000	9,000	9,000	24,000
9+9+9+12+12		9,000	9,000	9,000	12,000	12,000	9,000	9,000	9,000	12,000	12,000
9+9+9+12+18		9,000	9,000	9,000	12,000	18,000	9,000	9,000	9,000	12,000	18,000
9+9+9+18+18		9,000	9,000	9,000	18,000	18,000	9,000	9,000	9,000	18,000	18,000
9+9+12+12+12		9,000	9,000	12,000	12,000	12,000	9,000	9,000	12,000	12,000	12,000
9+9+12+12+18		9,000	9,000	12,000	12,000	18,000	9,000	9,000	12,000	12,000	18,000
9+12+12+12+12		9,000	12,000	12,000	12,000	12,000	9,000	12,000	12,000	12,000	12,000
9+12+12+12+18		9,000	12,000	12,000	12,000	18,000	9,000	12,000	12,000	12,000	18,000
12+12+12+12+12		12,000	12,000	12,000	12,000	12,000	12,000	12,000	12,000	12,000	12,000

Manufacturer reserves the right to change, at any time, specifications and designs without notice and without obligations.

UNIT MOUNTING (OUTDOOR)

Refer to the unit's installation instructions for further details.

Support – A location which can bear the weight of outdoor unit.

See "WEIGHTS" and "DIMENSIONS" on page 5.

Unit Leveling – For reliable operation, units should be level in all planes.

Clearances – Minimum clearances (See Figs. 8 and 9 on page 8), must be provided for airflow. The outdoor units are designed for free-blow applications. Air inlets and outlets should not be restricted.

Unit location – A location which is convenient to installation and not exposed to strong wind.

NOTE: Do not install the indoor or outdoor units in a location with special environmental conditions. For those applications, contact your sales representative.

System Operating Conditions

	COOLING	HEATING
Outdoor DB	5 / 122°F (-15 / 50°C)	-13 / 75°F (-25 / 24°C)

Metering Devices

The outdoor unit has multiple electronic expansion valves to manage the refrigerant flow to the different indoor fan coils connected to that unit.

WIRING

All wires must be sized per NEC (National Electrical Code) or CEC (Canadian Electrical Code) and local codes. Use Electrical Data table MCA (minimum circuit amps) and MOCP (maximum over current protection) to correctly size the wires and the disconnect fuse or breakers respectively.

RECOMMENDED CONNECTION METHOD FOR POWER AND COMMUNICATION WIRING:

The main power is supplied to the outdoor unit. The field supplied 14/3 stranded wire with ground with a 600 volt insulation rating, power/communication wiring from the outdoor unit to indoor unit consists of four (4) wires and provides the power for the indoor unit. Two wires are line voltage AC power (L1/L2 or 1,2), one is communication wiring (S or 3) and the other is a ground wire. Wiring between indoor and outdoor unit is polarity sensitive. The use of BX wire is **NOT** recommended.

If installed in a high Electromagnetic field (EMF) area and communication issues exists, a 14/2 stranded shielded wire can be used to replace L2 (or 2) and S (or 3) between outdoor unit and indoor unit landing the shield onto ground in the outdoor unit only.

CABLE	CABLE SIZE	REMARKS
Connection Cable	14AWG	3 wire + Ground 1Φ 208/230 V

WARNING

EQUIPMENT DAMAGE HAZARD

Failure to follow this caution may result in equipment damage or improper operation.

Wires should be sized based on NEC and local codes.

WARNING

EQUIPMENT DAMAGE HAZARD

Failure to follow this caution may result in equipment damage or improper operation.

Be sure to comply with local codes while running wire from the indoor unit to the outdoor unit.

Every wire must be connected firmly. Loose wiring may cause the terminal to overheat or result in unit malfunction. A fire hazard may also exist. Ensure all wiring is tightly connected.

No wire should touch the refrigerant tubing, compressor or any moving parts.

Disconnecting means must be provided and shall be located within sight and readily accessible from the air conditioner.

Follow Local Codes.

Connecting cable with conduit shall be routed through the hole in the conduit panel.

PIPING REQUIREMENTS

IMPORTANT: Both refrigerant lines must be insulated separately.

The minimum refrigerant line length between the indoor and outdoor units is 10 ft. (3 m). The following lengths are allowed. The following **Refrigerant Piping Table** lists the pipe sizes for the outdoor unit. For the indoor unit pipe sizes refer to the indoor unit installation instructions.

Refrigerant Piping:

Line sets to be sized based on the connection size of the indoor unit. Each pipe should be insulated individually.

38MTR SIZE		18K	27K	36K	48K
		(208/230 V)			
Min. Piping Length per each indoor unit	ft. (m)	10 (3)			
Standard Piping Length per each indoor unit	ft. (m)	25 (7.5)			
Max. outdoor-indoor height difference (OU higher than IU)	ft. (m)	49(15)	49(15)	49(15)	65(20)
Max. outdoor-indoor height difference (IU higher than OU)	ft. (m)	49(15)	49(15)	49(15)	65(20)
Max. height different between indoor units	ft. (m)	32 (10)			
Max. Length per each indoor unit	ft. (m)	82 (25)	98 (30)	115(35)	115 (35)
Max. Piping Length with no additional refrigerant charge per System (Standard Piping length x No. of Zones)	ft. (m)	50 (15)	75 (22)	100 (30)	125 (37.5)
Total Maximum Piping Length per system	ft. (m)	131(40)	197(60)	262(80)	328(100)
Additional refrigerant charge (between Standard – Max piping length)	Oz/ft (g/m)	0.16 (15)			
Number of IDU		2	3	4	5
Suction Pipe (size - connection type)	in	3/8*2	3/8*3	1/2 *1+ 3/8*3	1/2 *2+ 3/8*3
	(mm)	9.52*2	9.52*3	12.7*1+9.52*3	12.7*2+9.52*3
Liquid Pipe (size - connection type)	in	1/4*2	1/4*3	1/4*4	1/4*5
	(mm)	6.35*2	6.35*3	6.35*4	6.35*5
Refrigerant Type		R410A			
Charge Amount	Lbs (kg)	4.08(1.85)	5.73(2.6)	8.38(3.8)	10.14 (4.6)

NOTE: For piping runs greater than the "Maximum Piping Length with no additional refrigerant charge per System", see the Additional Refrigerant Charge note in the Long-Line Applications section.

General Guidelines:

1. The outdoor units are shipped with a full charge of R-410A refrigerant. For runs over the Maximum Piping Length with no additional refrigerant charge per system, consult "Refrigerant Piping:" on page 39 for proper charge adjustments.
2. Refrigerant lines should not be buried in the ground. If it is necessary to bury the lines, do not bury more than 36 inches (914 mm). Provide a minimum of 6 inch (152 mm) vertical rise to the service valves to prevent refrigerant migration.
3. Both lines must be insulated. Use a minimum of ½-inch (12.7 mm) thick insulation. Closed-cell insulation is recommended in all long-line applications.
4. Special consideration should be given to isolating the interconnecting tubing from the building structure. Isolate the tubing so vibration or noise does not transmit into the structure.

Long-Line Applications

No change in line sizing is required.

Drain Connections

Install drains that meet the local sanitation codes.

Control System

The **38MTR** unit is equipped with a microprocessor control to operate the system and give optimum levels of comfort and operating efficiency. There are microprocessor boards and thermistors located in both the indoor and outdoor units. The thermistors monitor the system operation and control the operating mode.

Sequence of Operation

NOTE: Simultaneous heating and cooling is not allowed.

The **HEATING** mode is the system's primary mode and the mode controls the operation mode for the remaining indoor units connected to the same outdoor unit. If any unit in the system is set to the **HEATING** mode, the system switches to heat. If any unit is in the **COOLING** mode, while any unit in the system is set to the **HEATING** mode, the units set to **COOLING** enter the **CONFLICT** mode and an error message appears on the units in the **COOLING** mode.

When the system is set for the **COOL**, **HEAT** or **DRY** mode, the compressor speed is varied by comparing the indoor air temperature with the set point and continuously adjusting the compressor speed (to keep the compressor running as long as possible) in an effort to maintain the greatest comfort possible.

The indoor fan can run in either the **MANUAL** or **AUTO** mode. When the fan runs in the **AUTO** mode, the speed is determined by comparing the room temperature to the set point.

For High Walls and Floor Console Fan Coils, when the set point is satisfied, the fan speed is reduced. For Cassettes and Ducted Fan Coils when the set point is satisfied, the fan continues to run. The Fan Coils are not de-energized.

When the unit goes through the defrost cycle, the indoor fans are de-energized and the refrigerant is circulated through all the fan coils (even if they are off or were in the standby mode before the defrost cycle) to maximize the heat transfer surface area available for defrost operation.

⚠ WARNING

AUTO mode is recommended for use on single zone applications **ONLY**. **AUTO** mode is **NOT** recommended for use on multi-zone applications.

Using **AUTO** changeover on multi-zone applications could set an indoor unit to **Standby** mode, indicated as (**--**) on the display, and turn off the indoor unit until all the indoor units are on the same mode (**COOLING** or **HEATING**).

HEATING mode is the priority for the system. Simultaneous **HEATING** and **COOLING** is not allowed.

AIRFLOW DATA

UNIT SIZE	18K	27K	36K	48K
	(208/230V)			
OUTDOOR (CFM)	1765	2129	2147	4500

SOUND PRESSURE

SYSTEM SIZE		18K	27K	36K	48K
		(208/230 V)			
Outdoor Sound Pressure Level	dB(A)	58.5	61.0	63.0	64.0
Outdoor Sound Power Level	dB(A)	67.0	68.0	70.5	72.0

SOUND POWER IN OCTAVE BANDS

	Frequency (Hz)	63	125	250	500	1000	2000	4000	8000
2 ZONE 18K	Cooling dB(A)	53.6	60.4	54.8	53.3	50	44.4	39.8	36.5
	Heating dB(A)	56.3	63.5	59.2	55.8	55	48.2	43.9	40.8
3 ZONE 27K	Cooling dB(A)	59.2	60.6	58.3	52.9	53.5	48.2	44.7	38.5
	Heating dB(A)	60.6	61.8	60.1	57.1	55.9	52.3	48	43.3
4 ZONE 36K	Cooling dB(A)	60.8	62.7	59.5	55.8	54.2	50.1	46.9	40.7
	Heating dB(A)	63.9	64.2	63	57.9	57.6	53.5	50.9	45.1
5 ZONE 48K	Cooling dB(A)	62.4	62.0	57.1	57.1	53.8	47.7	44	39.9
	Heating dB(A)	68.5	65.2	67.6	59.2	58.6	53.3	49.8	45.9

OUTDOOR UNIT SOUND PRESSURE TEST CONDITIONS

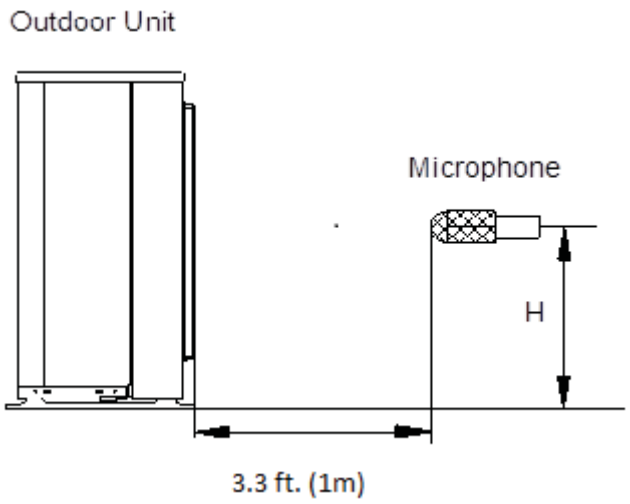

Fig. 10 — Outdoor Unit Sound Pressure Test Conditions

NOTE: H = 0.5 x Height of the outdoor unit.

	INDOOR CONDITION		OUTDOOR CONDITION	
	DB	WB	DB	WB
COOLING	80.6°F (27°C)	66.2°F (19°C)	95°F (35°C)	75.2°F (24°C)
HEATING	68°F (20°C)	59°F (15°C)	44.6°F (7°C)	42.8°F (6°C)

FAN AND MOTOR SPECIFICATIONS

38MTRA			18K	27K	36K	48K
			(208/230 V)			
Outdoor Fan	Material		AS			
	Type		ZL-535*133*12-3KFN	ZL560*139*12-3KN	ZL560*139*12-3KN	ZL554*148*12-3KFN
	Diameter	inch	21(535)	22(560)	22(560)	21.81(554)
	Height	inch	5.24(133)	5.47(139)	5.47(139)	5.83(148)
Outdoor Fan Motor	Model		ZKFN-80-8-3	ZKFN-120-8-2	ZKFN-120-8-2	ZKFN-85-8-22-5
	Volts	V	208/230			
	Phase		1			
	Hertz	Hz	60			
	FLA		1.0	1.7	1.0	2.5
	Rated HP	HP	0.1	0.16	0.16	0.11
	Output	W	80	120	120	85
	Type		DC			
	Insulation class		E			
	Safe class		IPX4			
	Input	W	88	156	156	108
	Range of current	Amps	0.73±10%	1.34±10%	1.34±10%	0.92±10%
	Rated current	Amps	0.73	1.34	1.34	0.92
	Speed	rev/min	850~200	900~150	1000~150	870~300
	Rated RPM	rev/min	750.0	850.0	900.0	800.0
	Max. input	W	120.0	170.0	170.0	126.0

ELECTRICAL DATA

Outdoor Unit		18K	27K	36K	48K
MCA	A	18	24.5	25	40
MOCP	A	25	30	40	60
Voltage-Phase-Frequency		208/230-1-60			
Max – Min Voltage Range	V	253-187			
COOLING					
Running current	(A)	6.2	11	13.6	17.4
Power consumption	(W)	1355	2240	3125	3840
Power factor	(%)	0.971	0.954	0.972	0.96
HEATING					
Running current range	(A)	6.3	10.5	13	17.7
Power consumption	(W)	1420	2200	3000	3900
Power factor	(%)	0.971	0.954	0.972	0.96

*Permissible limits of the voltage range at which the unit operates satisfactorily.

LEGEND

FLA - Full Load Amps
MCA - Minimum Circuit Amps
MOCP - Maximum Over Current Protection
RLA - Rated Load Amps

WIRING DIAGRAMS

18K - 2 Zone

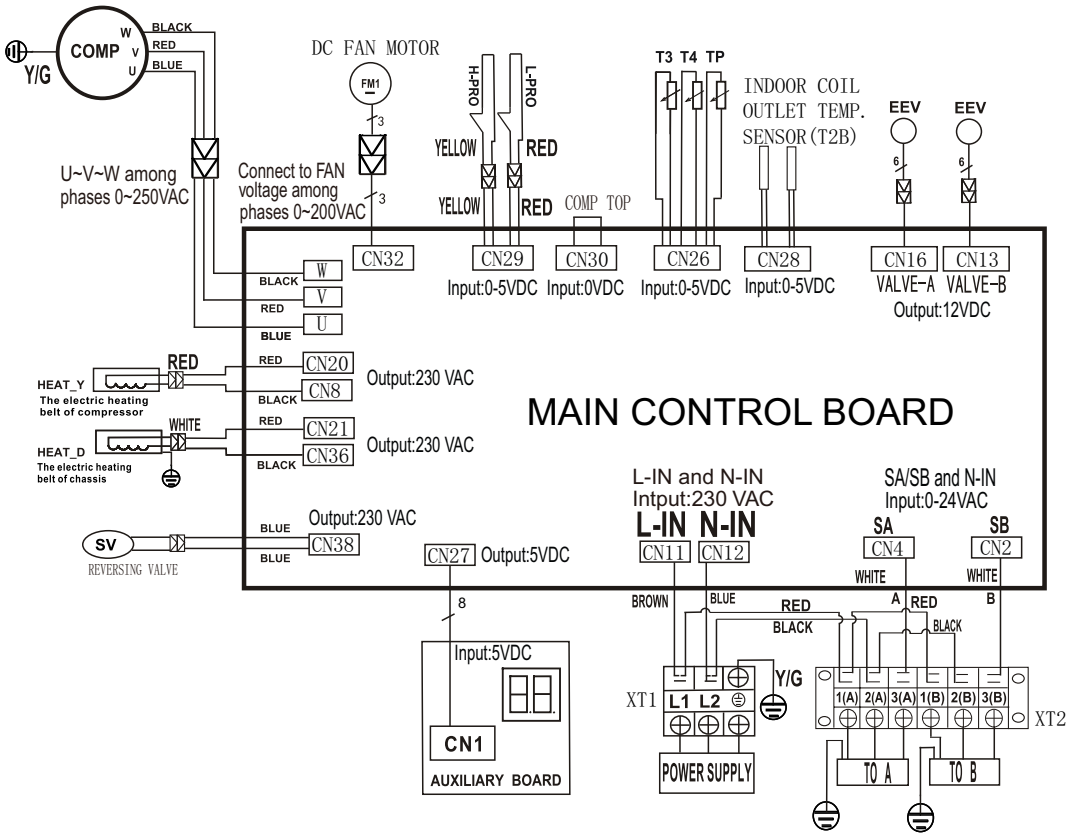

Fig. 11 — Wiring Diagram 18K - 2 Zone

CODE	PART NAME
COMP	Compressor
EEV	Electric Expansion Valve
FM1	DC Fan Motor
HEAT_D	Chassis Heater
HEAT_Y	Crankcase Heater
H-PRO	High Pressure Switch
L-PRO	Low Pressure Switch
SV	Reversing Valve
TP	Comp. Discharge Temperature Sensor
T3	Outdoor Coil Temperature Sensor
T4	Outdoor Ambient Temperature Sensor
COMP TOP	Compressor TOP OLP Temperature Sensor

WIRING DIAGRAMS (CONT)

27K - 3 Zone Max

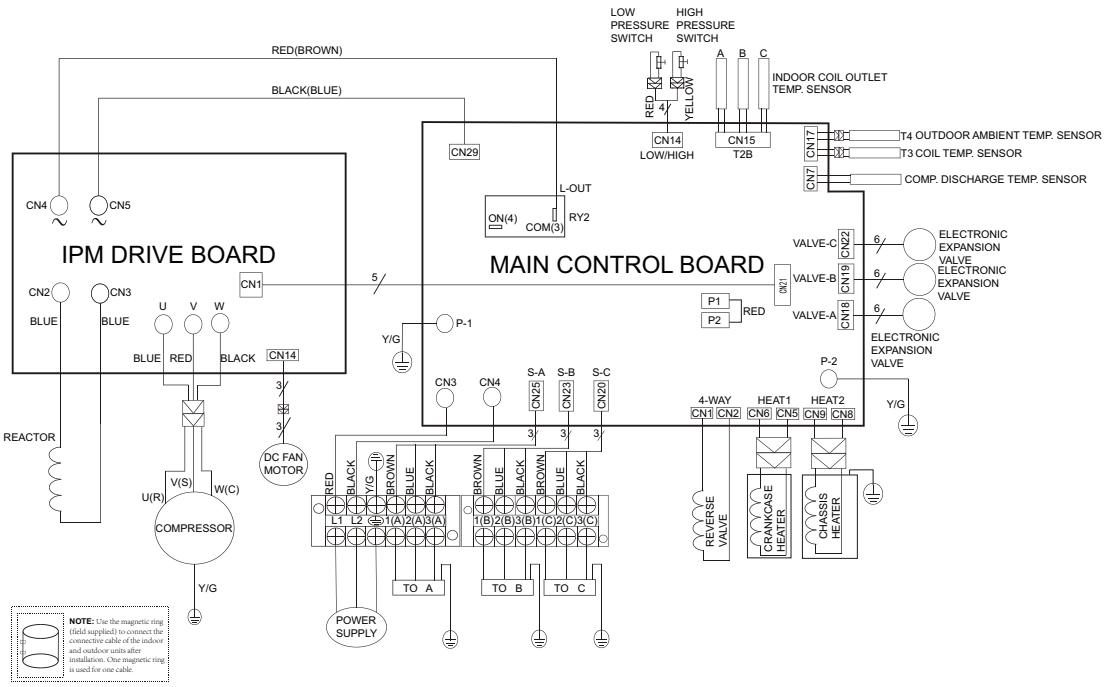

Fig. 12 — Wiring Diagram 27K - 3 Zone

CODE	PART NAME
CN3~CN4	Input: 230VAC High voltage
CN20,CN23,CN25	Output: Pin1 (Connection of the high voltage)---“S” Pin2~Pin3 (230VAC High voltage)---”L1&L2”
P1~P2	Output: Short Circuit with Red Wire
CN1~CN2	Output: 230VAC High voltage --- 4 Way Valve
CN5~CN6	Output: 230VAC High voltage --- Compressor Crankcase Heater
CN8~CN9	Output: 230VAC High voltage --- Chassis Crankcase Heater
P-1~P-2	Ground wire
CN18,CN19,CN22	Output: Pin1-Pin4: Pulse waveform (0-12VDC), Pin5, Pin6 (12VDC)---EEV
CN7	Input: Pin1 (0-5VDC), Pin2 (5VDC) --- Discharge Sensor
CN17	Input: Pin3, Pin4 (5VDC), Pin2 (0VDC), Pin1, Pin5 (0-5VDC)-OUD Conditioner Temperature
CN15	Input: Pin1, Pin3, Pin5 (5VDC) Pin2, Pin4, Pin6 (0-5VDC) --- IDU Pipe Temp
CN14	Input: Pin2, Pin4 (0VDC), Pin1, Pin3 (0-5VDC) --- H/L Pressure Switch
CN12	Input: Pin1 (5VDC), Pin2 (0-5VDC) --- Compressor Temp
CN29~L-OUT	Output: 230VAC High voltage to IPM Board
CN21	Connect to the IPM BOARD

CODE	OUTDOOR UNIT IPM DRIVE BOARD
CN4~CN5	Input: 230VAC High voltage - from main board
CN2~CN3	Output: Connection of the REACTOR
U~V~W	Connect to compressor voltage among phases 0~200VAC
CN14	Connect to the DC FAN
CN1	Connect to the MAIN BOARD

WIRING DIAGRAMS (CONT)

36K - 4 Zone

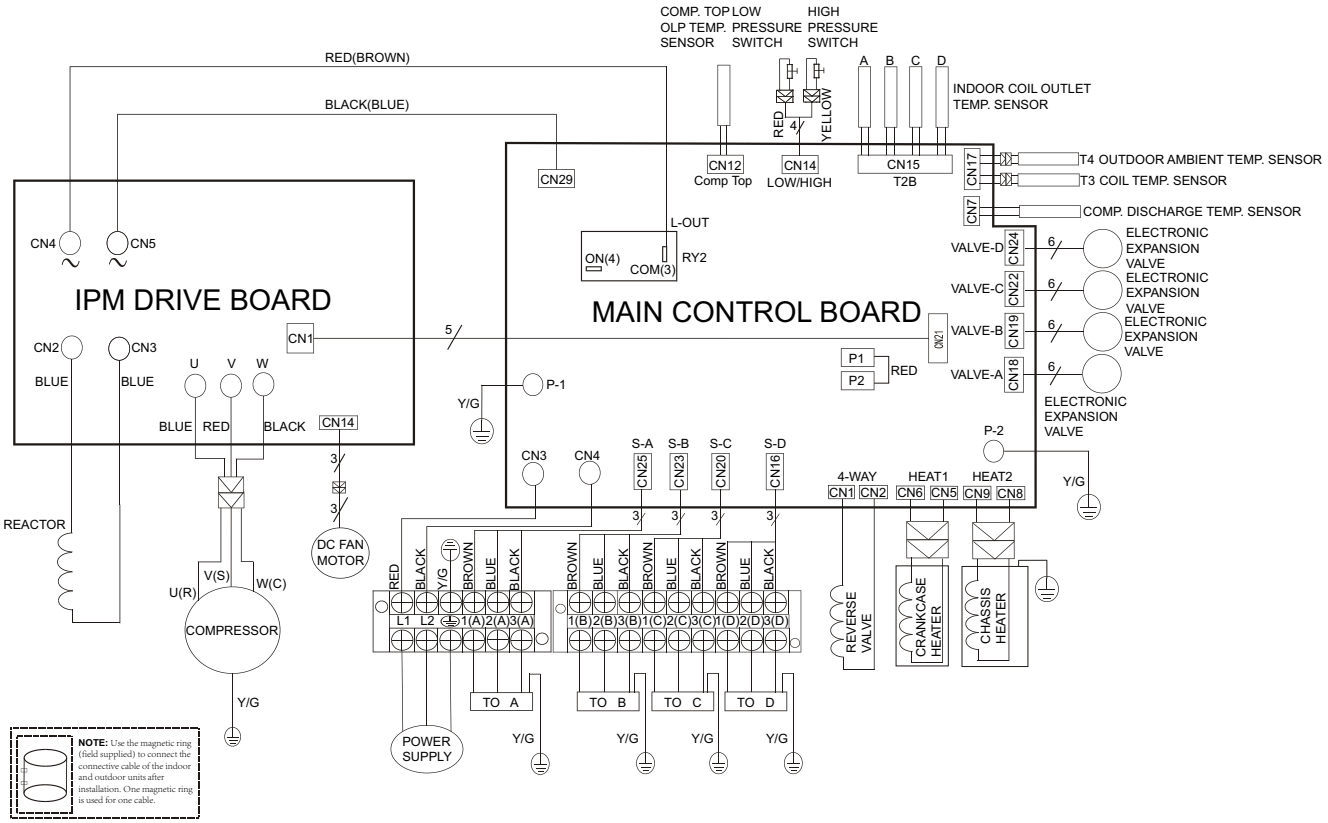

Fig. 13 — Wiring Diagram 36K - 4 Zone

CODE	PART NAME
CN3~CN4	Input: 230VAC High voltage
CN16~CN20 CN23, CN25	Output: Pin1(Connection of the high voltage)---"S" Pin2~Pin3(230VAC High Voltage)---"L1&L2"
P-1~P2	Output: Short Circuit with RED WIRE
CN1~CN2	Output: 230VAC High voltage---4-WAY VALUE
CN5~CN6	Output: 230VAC High voltage -- COMPRESSOR CRANKCASE HEATER
CN8~CN9	Output: 230VAC High voltage -- CHASIS CRANKCASE HEATER
P-1~P-2	Connection to the earth
CN18,CN19, CN22,CN24	Output: Pin-Pin4:Pulse waveform (0-12VDC),Pin5,Pin6(12VDC)--EEV
CN7	Input: Pin1 (0-5VDC)---Discharge Sensor
CN17	Input:Pin3,Pin4(5VDC),Pin5(0-5VDC)---OUD Cond. Temperature
CN15	Input:Pin1,Pin3,Pin5,Pin7(5VDC)Pin2,Pin4,Pin6Pin8,(0-5VDC)---IDO PIPE TEMP
CN14	Input:Pin2,Pin4(0-5VDC,Pin1,Pin3(0VDC)---H/L Pressure Switch
CN12	Input:Pin1(5VDC),Pin2(0-5VDC)---Compressor Temp.
CN29-L-OUT	Output:230VAC High Voltage--To IPM Board
CN21	Connect to IPM Board

CODE	OUTDOOR UNIT PFC AND IPM BOARD
CN4~CN5	Input: 230VAC High voltage---From Main Board
CN2~CN3	Output: Connection to the REACTOR
U~V~W	Connect to compressor voltage among phases 0~200VAC
CN14	Connection the DC FAN
CN1	Connection to MAIN BOARD

WIRING DIAGRAM (CONT)

48K - 5 Zone Max

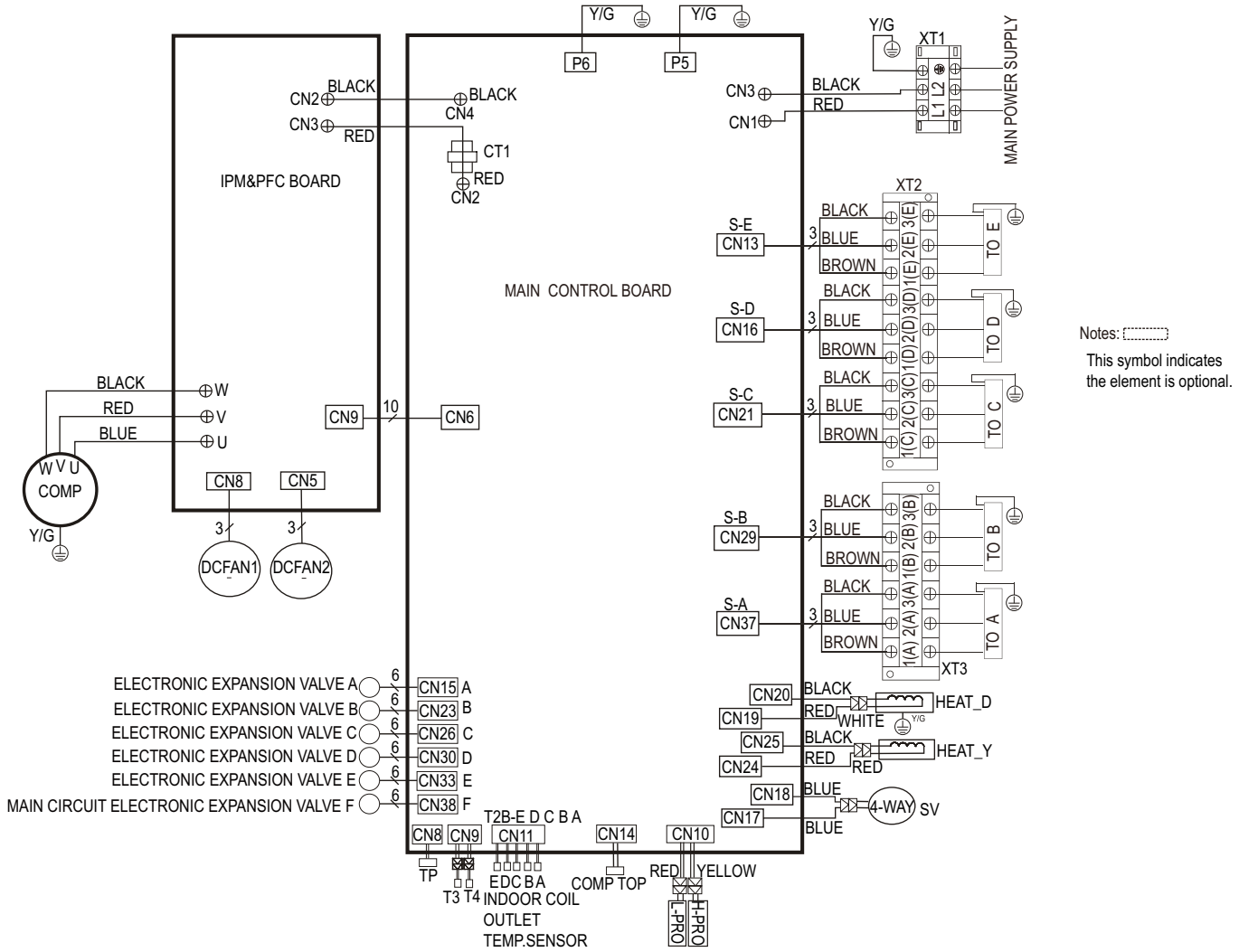

Fig. 14 — Wiring Diagram 48K - 5 Zone Max

CODE	OUTDOOR UNIT MAIN BOARD SIZE 48R
CN1~CN3	Input: 230VAC High voltage
CN13,CN16,CN21,CN29,CN37	Output: Pin1 (Connection of the high voltage) “S” Pin2~Pin3 (230VAC High voltage) “L1 & L2”
P5,P6,P9	Connection to the earth
CN17~CN18	Output: 230VAC High voltage --- REVERSING VALUE
CN24~CN25	Output: 230VAC High voltage --- CRANKCASE HEATER
CN19~CN20	Output: 230VAC High voltage --- CHASSIS HEATER
CN11	Input: Pin1, Pin3, Pin5, Pin7, Pin9 (5VDC) Pin2, Pin4, Pin6, Pin8, Pin10 (0-5VDC) indoor coil outlet sensor
CN8	Input: Pin1 (0-5VDC), Pin2 (5VDC)
CN9	Input: Pin3, Pin4 (5VDC), Pin2 (0VDC), Pin1, Pin5 (0-5VDC)
CN15,CN23,CN26 CN30,CN33,CN38	Output: Pin1-Pin4: Pulse waveform (0-12VDC), Pin5, Pin6 (12VDC) to EEV
CN6	Communication: Pin1-Pin6: Pulse waveform (0-5VDC), Pin7, Pin9 (0VDC) Pin8 (0-5VDC), Pin10 (5VDC)--to IPM & PFC board
CN2~CN4	Output: 230VAC High voltage to IPM & PFC Board
CN10	Input: Pin2, Pin4 (0VDC), Pin1, Pin3 (0-5VDC)--H/L Pressure switch
CN14	Input:Pin1(5VDC),Pin2(0-4VDC)--COMP.TOP OLP TEMP.SENSOR

WIRING DIAGRAM (CONT)

48K - 5 Zone Max

CODE	OUTDOOR UNIT PFC AND IPM BOARD SIZE 48R
CN2~CN6	Output: 224-380VDC High voltage
CN9	Communication: Pin1-Pin6: Pulse waveform (0-5VDC), Pin7, Pin9 (0VDC), Pin8 (0-5VDC), Pin10 (5VDC) to the main board
U~V~W	Connect to compressor voltage among phases 0~250VAC
CN8 CN5	Connect to DC FAN voltage among phases 0-200VAC

CODE	PART NAME
COMP	COMPRESSOR
EEV	ELECTRONIC EXPANSION VALVE
DCFAN1, DCFAN2	OUTDOOR DC FAN MOTOR
HEAT_D	CHASSIS HEATER
HEAT_Y	CRANKCASE HEATER
H-PRO	HIGH PRESSURE SWITCH
L-PRO	LOW PRESSURE SWITCH
SV	REVERSING VALVE
TP	COMP. DISCHARGE TEMP. SENSOR
T3	COIL DISCHARGE SENSOR
T4	OUTDOOR AMBIENT TEMP. SENSOR
COMP TOP	COMP.TOP OLP TEMP. SENSOR
T2B	INDOOR COIL OUTLET TEMP SENSOR

Manufacturer reserves the right to change, at any time, specifications and designs without notice and without obligations.

GUIDE SPECIFICATIONS

MULTI-ZONE HEAT PUMP HORIZONTAL DISCHARGE OUTDOOR DUCTLESS SYSTEM

Size Range:1 1/2, 2 1/4, 3 and 4 Ton Nominal Cooling and Heating Capacity
Model Number: **38MTR**

Part 1 - General

1.01 System Description

a. Outdoor air−cooled split system compressor sections suitable for on−the−ground, rooftop, wall hung or balcony mounting. Units consist of a variable speed rotary compressor, an air−cooled coil, propeller−type draw−through outdoor fan, reversing valve, accumulator, electronic expansion valves, multiple service valves, and controls that allow multiple indoor units to be connected to the outdoor unit. Units discharge horizontally as shown on the contract drawings. Units function as the outdoor component of an air−to−air heat pump system.
b. Units are designed for use in a refrigeration circuit matched to two, three, four, or five multi style heat pump fan coil units.

1.02 Agency Listings

a. Unit construction complies with ANSI/ASHRAE 15, latest revision, and with the NEC.
b. Units are evaluated in accordance with the UL standard 1995.
c. Units are listed in CEC directory.
d. Unit cabinet is capable of withstanding the 500-hour salt spray test per Federal Test Standard no. 141 (method 6061).
e. Air-cooled condenser coils are leak tested at 550 psig.

1.03 Delivery, Storage, And Handling

Units are shipped in one piece and are stored and handled per the manufacturer's recommendations.

1.04 Warranty (For Inclusion By Specifying Engineer)

Part 2 - Products

2.01 Equipment

1. **General:**
   Factory assembled, single piece, air-cooled outdoor unit. Contained within the enclosure are the factory wiring, piping, controls, and the compressor.
2. **Unit Cabinet:**
   a. The unit cabinet is constructed of galvanized steel, bonderized and coated with baked-enamel finish on the inside and outside.
   b. The unit access panel is removable and provides full access to the compressor, fan, and the control components.
   c. The outdoor compartment is isolated and has an acoustic lining to assure a quiet operation.
3. **Fans:**
   a. The outdoor fans are direct-drive propeller type, and discharge air horizontally. The fan draws air through the outdoor coil.
   b. Outdoor fan motors are multi-speed, totally-enclosed, single phase motors with permanently lubricated ball bearings. The motor is protected by internal thermal overload protection.
   c. The shaft has an inherent corrosion resistance.
   d. Outdoor fan openings are equipped with a metal/mesh PVC coated protection grille over the fan.
4. **Compressor:**
   a. The compressor is the fully hermetic variable speed rotary type.
   b. The compressor is inverter driven.
   c. The compressor is equipped with an oil system, operating oil charge, and motor.
   d. The motor is suitable for operation in a refrigerant and oil atmosphere.
   e. The compressor assembly is installed on rubber vibration isolators.
   f. The inverter and compressor are protected against over temperature and over current.
5. **Outdoor Coil:**
   The coil is constructed of aluminum golden hydrophilic pre-coated fins mechanically bonded to seamless copper tubes, which are cleaned, dehydrated and sealed.
6. **Refrigerant Components:**
   Refrigerant circuit components include multiple brass external liquid line service valves with a service gauge connection port, multiple suction line service valves with a service gage connection port, accumulator, reversing valve, and electronic expansion valves.
7. **Safeties:**
   Operating safeties are factory selected, assembled, and tested. The minimum functions include the following:
   a. Compressor discharge over temperature protection.
   b. System low voltage protection.
   c. Compressor overload protection.
   d. Compressor over current protection.
   e. IPM module protection.
8. **Electrical Requirements:**
   a. Units operate on single-phase, 60 Hz power at 208/230v.
   b. The unit electrical power is a single point connection.
   c. All power and control wiring must be installed per NEC and all local electrical codes.
   d. Units have multiple terminal blocks to connect to multiple indoor units.

© 2023 Carrier. All rights reserved.

Manufacturer reserves the right to change, at any time, specifications and designs without notice and without obligations.