# 605E
# Preferred™ Up to 15.5 SEER2 2-Stage Packaged Heat Pump System with Puron Advance™ (R-454B) Refrigerant
# Single and Three Phase
# 2 to 5 Nominal Tons (Sizes 24-60)

# Product Data

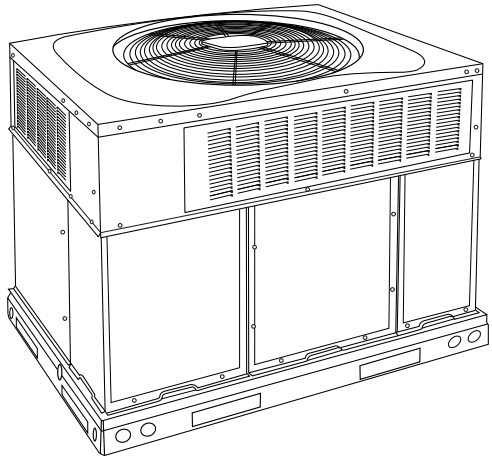

A09033

**Fig. 1 – Unit 605E**

Single-Packaged Products with Energy-Saving Features and Puron Advance™ refrigerant.

- Up to 15.5 SEER2 / Up to 11.5 EER2 at 95°F (35°C) OD
- Up to 7.7 HSPF2
- Factory-Installed TXV
- Multi-speed ECM Blower Motor - Standard
- Sound levels as low as 71dBA
- Two Stages of Cooling/Heating
- Dehumidification Feature - Standard
- Cabinet air leakage of 2.0% or less at .5 in. W.C. when tested in accordance with ASHRAE standard 193
- Refrigerant leak detection dissipation system for added safety

## Features/Benefits

One-piece heat pump unit with optional electric heater, low sound levels, easy installation, low maintenance, and dependable performance.

Bryant's unique refrigerant designed to be environmentally balanced. Puron Advance is an HFC refrigerant which does not contain chlorine that can harm the ozone layer. Puron Advance refrigerant is in service in millions of systems proving highly reliable and is non-ozone depleting. This unit is designed and tested with Puron Advance and contains a dissipation system.

**Easy Installation**

Factory-assembled package is a compact, fully self-contained, electric cooling unit that is prewired, pre-piped, and pre-charged for minimum installation expense. These units are available in a variety of standard cooling sizes with voltage options to meet residential and light commercial requirements. Units are lightweight and install easily on a rooftop or at ground level. The high tech composite base eliminates rust problems associated with ground level applications.

**Innovative Unit Base Design**

On the inside a high-tech composite material will not rust and incorporates a sloped drain pan which improves drainage and helps inhibit mold, algae and bacterial growth. On the outside metal base rails provide added stability as well as easier handling and rigging.

**Convertible duct configuration**

Unit is designed for use in either downflow or horizontal applications. Each unit is converted from horizontal to downflow and includes horizontal duct covers. Downflow operation is provided in the field to allow vertical ductwork connections. The basepan seals on the bottom openings to ensure a positive seal in the vertical airflow mode.

Efficient operation High-efficiency design offers SEER2 (Seasonal Energy Efficiency Ratios) of up to 15.5 and HSPF2 of up to 7.7. (See page 3)

**Durable, dependable components**

Scroll Compressors have 2 stages of cooling/heating and are designed for high efficiency. Each compressor is hermetically sealed against contamination to help promote longer life and dependable operation. Each compressor also has vibration isolation to provide quieter operation. All compressors have internal high pressure and overcurrent protection.

**Multi-speed ECM Blower Motor** is standard on all models.

**Direct-drive PSC (Permanent Split Capacitor) condenser-fan motors** are designed to help reduce energy consumption and provide for cooing operation down to 40°F (4.4°C) outdoor temperature. low ambient kit is available as a field-installed accessory.

**Thermostatic Expansion Valve** - A hard shutoff, balance port TXV maintains a constant superheat at the evaporator exit (cooling cycle) resulting in higher overall system efficiency.

**Refrigerant system** is designed to provide dependability. Liquid filter driers are used to promote clean, unrestricted operation. Each unit leaves the factory with a full refrigerant charge. Refrigerant service connections make checking operating pressures easier. Factory-installed leak detection dissipation system for added safety.

**High and Low Pressure Switches** provide added reliability for the compressor.

**Indoor and Outdoor coils** are computer-designed for optimum heat transfer and efficiency. The indoor coil is fabricated from tin-plated copper tube and aluminum fins and is located inside the unit for protection against damage. The outdoor coil is internally mounted on the top tier of the unit.

**Low sound ratings** ensure a quiet indoor and outdoor environment with sound ratings as low as 71dBA. (See page 3.)

**Easy to service cabinets** provide easy 3 panel accessibility to serviceable components during maintenance and installation. The basepan with integrated drain pan provides easy ground level installation with a mounting pad. A nesting feature ensures a positive basepan to roof curb seal when the unit is roof mounted. A convenient 3/4-in. (19.05 mm) wide perimeter flange makes frame mounting on a rooftop easy.

**Dehumidification Feature** - Standard

This unit has independent fan speeds for low stage cooling and high stage cooling. In addition, 208/230 VAC models have the field-selectable capability to run a dehumidification ('DHUM') speed on high stage cooling (as low as 320CFM per ton). Coupled with the improved dehumidification associated with low stage cooling, the DHUM speed allows for a complete dehumidification solution independent of cooling stage. The dehumidification control must open the control circuit on humidity rise above the dehumidification set point.

**NOTE:** The dehumidification feature on high stage cooling does not support use of an economizer.

**Standard horizontal metal duct covers** with insulation come with the unit and cover the horizontal duct openings. These can be left in place if the units are converted to downflow.

**Cabinets** are constructed of heavyduty, phosphated, zinc-coated prepainted steel capable of withstanding 500 hours in salt spray. Interior surfaces of the evaporator/electric heater compartment are insulated with foil-faced insulation, which keeps the conditioned air from being affected by the outdoor ambient temperature and provides improved indoor air quality. (Conforms to American Society of Heating, Refrigeration and Air Conditioning Engineers No. 62P.) The sloped drain pan minimizes standing water in the drain. An external drain is provided.

**Short-Cycling protection** for the compressor is incorporated into our defrost control board ensuring a five minute delay (+/-2 minutes) before restarting compressor after shutdown for any reason.

## Table of Contents


Features/Benefits . . . . . 1
Table of Contents . . . . . 2
Model Number Nomenclature . . . . . 2
605E 24 Unit Dimensions . . . . . 6
605E 36-60 Unit Dimensions . . . . . 7
Application Data . . . . . 22
Electrical Data . . . . . 23
Controls . . . . . 31
Guide Specifications . . . . . 32


## Model Number Nomenclature

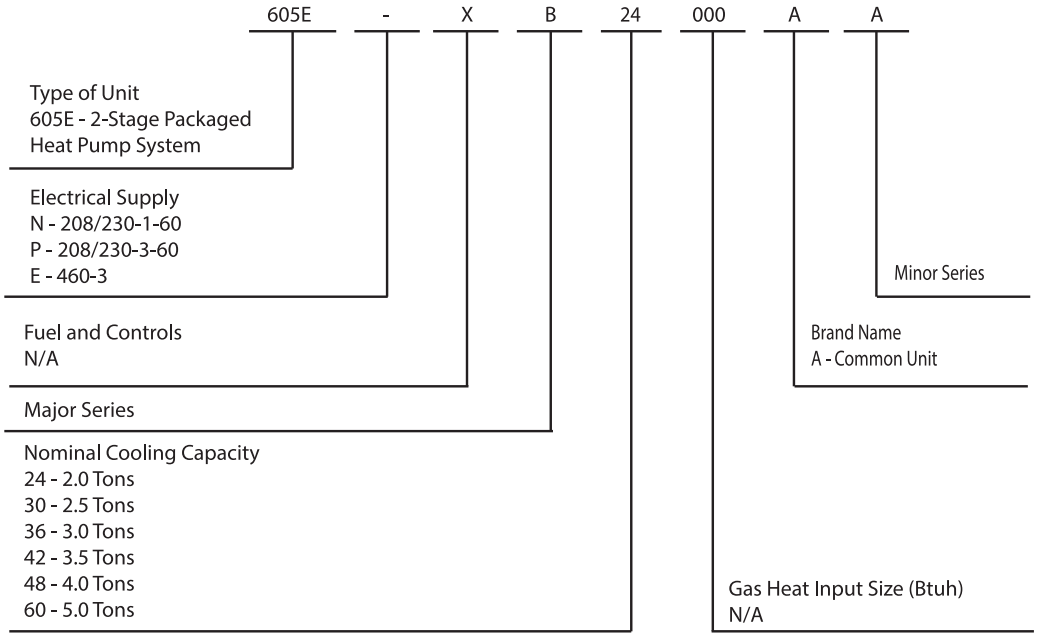


ASHRAE 90.1 COMPLIANT

c UL US LISTED

AHRI CERTIFIED TM www.ahridirectory.org

Use of the AHRI Certified TM Mark indicates a manufacturer's participation in the program For verification of certification for individual products, go to www.ahridirectory.org.

Energy ENERGY STAR

| SAP ORDERING NO. | NOMINAL COOLING CAPACITY (Btuh) | VOLTS-PHASE (60 HZ) | APPROX SHIP WT (LB) |
|---|---|---|---|
| 605ENXB24000 | 24,000 | 208/230-1 | 393 |
| 605ENXB36000 | 36,000 | 208/230-1 | 442 |
| 605EPXB36000 | 36,000 | 208/230-3 | 442 |
| 605EEXB36000 | 36,000 | 460-3 | 442 |
| 605ENXB48000 | 48,000 | 208/230-1 | 493 |
| 605EPXB48000 | 48,000 | 208/230-3 | 493 |
| 605EEXB48000 | 48,000 | 460-3 | 493 |
| 605ENXB60000 | 60,000 | 208/230-1 | 547 |
| 605EPXB60000 | 60,000 | 208/230-3 | 547 |
| 605EEXB60000 | 60,000 | 460-3 | 547 |

# AHRI* Capacities

## Cooling Capacities and Efficiencies

| Unit Size | Nominal Tons | Standard CFM (High / Low Stage) | Net Cooling Capacity - Btuh (High Stage) | EER2 @ A** | SEER2† |
|---|---|---|---|---|---|
| 24 | 2 | 855 / 675 | 22200 | 11.5 | 15.2 |
| 36 | 3 | 1200 / 900 | 35200 | 11.5 | 15.2 |
| 48 | 4 | 1600 / 1200 | 46500 | 11.5 | 15.2 |
| 60 | 5 | 1750 / 1400 | 56000 | 11.5 | 15.5 |

## Heat Pump Heating Capacities and Efficiencies

| Unit Size | Heating Capacity - Btuh (High Stage) @ 47°F (8.3°C) Outdoor Temperature | COP (High Stage) @ 47°F (8.3°C) Outdoor Temperature | Heating Capacity - Btuh (High Stage) @ 17°F (-8.3°C) Outdoor Temperature | COP (High Stage) @ 17°F (-8.3°C) Outdoor Temperature | HSPF2 | Heating Cd |
|---|---|---|---|---|---|---|
| 24 | 23400 | 4.0 | 12000 | 2.3 | 7.2 | 0.25 |
| 36 | 34400 | 3.4 | 19600 | 2.3 | 7.2 | 0.25 |
| 48 | 44500 | 3.6 | 25400 | 2.4 | 7.2 | 0.25 |
| 60 | 55500 | 3.2 | 35200 | 2.6 | 7.7 | 0.25 |

LEGEND
dB-Sound Levels (decibels)
db—Dry Bulb
SEER—Seasonal Energy Efficiency Ratio
wb—Wet Bulb
COP-Coefficient of Performance
* Air Conditioning, Heating & Refrigeration Institute.
**At "A" conditions-80°F (26.7°C) indoor db/67°F (19.4°C) indoor wb & 95°F (35°C) outdoor db.
{ Rated in accordance with U.S. Government DOE Department of Energy) test procedures and/or AHRI Standards 210/240.
Notes:
1. Ratings are net values, reflecting the effects of circulating fan heat.
Ratings are based on:
Cooling Standard: 80°F (26.7°C) db, 67°F wb (19.4°C) indoor entering-air temperature and 95°F db (35°C) outdoor entering-air temperature.
2. Before purchasing this appliance, read important energy cost and efficiency information available from AHRIdirectory.org.

## A-Weighted Sound Power Level (dBA)

| UNIT SIZE | STANDARD RATING (dBA) | TYPICAL OCTAVE BAND SPECTRUM (dBA without tone adjustment) | | | | | | |
|---|---|---|---|---|---|---|---|---|
| | | 125 | 250 | 500 | 1000 | 2000 | 4000 | 8000 |
| 24 | 71 | 58 | 60 | 62 | 67 | 64 | 58 | 51 |
| 36 | 73 | 58 | 63 | 67 | 69 | 64 | 58 | 51 |
| 48 | 71 | 59 | 62 | 65 | 66 | 62 | 56 | 50 |
| 60 | 71 | 59 | 62 | 65 | 65 | 63 | 59 | 52 |

NOTE: Tested in compliance with AHRI 270 but not listed with AHRI.

## Physical Data

| UNIT SIZE | 24 | 36 | 48 | 60 |
|---|---|---|---|---|
| NOMINAL CAPACITY (ton) | 2 | 3 | 4 | 5 |
| SHIPPING WEIGHT lb. | 393 | 442 | 493 | 547 |
| SHIPPING WEIGHT (kg) | 178 | 201 | 224 | 248 |
| COMPRESSORS | Scroll | | | |
| Quantity | 1 | | | |
| REFRIGERANT (R-454B) | | | | |
| Quantity lb | 8.25 | 8.75 | 10.0 | 15.5 |
| Quantity (kg) | 3.7 | 4.0 | 4.5 | 7.0 |
| REFRIGERANT METERING DEVICE | TXV, Indoor TXV | | | |
| MINIMUM CONDITIONED SPACE AREA (SQ. FT.) | 137 | 137 | 152 | 243 |
| ORIFICE | | | | |
| ID (in.) | .032 (2) | .035 (2) | .038 (2) | .040 (2) |
| ID (mm) | 0.81 (2) | 0.87 (2) | 0.97 (2) | 1.02 (2) |
| OUTDOOR COIL | | | | |
| Rows...Fins/in. | 2...21 | 2...21 | 2...21 | 2...21 |
| Face Area (sq ft) | 18.8 | 19.4 | 23.3 | 23.3 |
| OUTDOOR FAN | | | | |
| Nominal Cfm | 2200 | 3800 | 3600 | 3600 |
| Diameter in. | 24 | 26 | 26 | 26 |
| Diameter (mm) | 609.6 | 660.4 | 660.4 | 660.4 |
| Motor Hp (Rpm) | 1/12 (800) | 1/5 (810) | 1/5 (810) | 1/5 (810) |
| INDOOR COIL | | | | |
| Rows...Fins/in. | 3...17 | 3...17 | 3...17 | 4...17 |
| Face Area (sq ft) | 3.7 | 4.7 | 5.7 | 5.7 |
| INDOOR BLOWER | | | | |
| Required Minimum Dissipation Airflow (Cfm) | 239 | 239 | 266 | 426 |
| Nominal Low Stage Cooling Airflow (Cfm) | 675 | 900 | 1200 | 1400 |
| Nominal High Stage Cooling Airflow (Cfm) | 855 | 1200 | 1600 | 1750 |
| Size in. | 10x10 | 11x10 | 11x10 | 11x10 |
| Size (mm.) | 254x254 | 279.4x254 | 279.4x254 | 279.4x254 |
| Motor HP (RPM) | 1/2 (1050) | 3/4 (1000) | 1.0 (1075) | 1.0 (1075) |
| HIGH-PRESSURE SWITCH | 650 +/- 15 | | | |
| (psig) Cut-out Reset (Auto) | 420 +/- 25 | | | |
| LOW-PRESSURE SWITCH | 20 +/- 5 | | | |
| (psig) cut-out Reset (auto) | 45 +/- 5 | | | |
| RETURN-AIR FILTERS (Filter inside home)* | | | | |
| Throwaway Size in. | 20x20x1 | 24x30x1 | 24x36x1 | |
| Throwaway Size (mm) | 508x508x25 | 610x762x25 | 610x914x25 | |
| RETURN-AIR FILTERS (Filter in Accessory Internal Filter Rack in unit)*† | | | | |
| Throwaway Size (in.) | 2 each 12x20x1 | 1 each 14x24x1, 16x24x1 | 1 each 406x610x25 | |
| Throwaway Size (mm) | 2 each 305x508x25 | 1 each 356x610x25, 406x610x25 | 457x610x25 | |

*. Required filter sizes shown are based on the larger of the AHRI (Air Conditioning Heating and Refrigeration Institute) rated cooling airflow or the heating airflow velocity of 300 ft/minute for throwaway type or 450 ft/minute for high-capacity type. Air filter pressure drop for non-standard filters must not exceed 0.08 in. W.C.

†. If unit has an economizer, please refer to economizer accessory kit for proper filter sizes.

## Electric Heat Pressure Drop Tables (IN. W.C.)

## Small Cabinet: 24

| STATIC | STANDARD CFM (SCFM) | | | | | | | | | | | |
|---|---|---|---|---|---|---|---|---|---|---|---|---|
| | 500 | 600 | 700 | 800 | 900 | 1000 | 1100 | 1200 | 1300 | 1400 | 1500 | 1600 |
| 5 kW | 0.00 | 0.00 | 0.00 | 0.00 | 0.00 | 0.00 | 0.00 | 0.00 | 0.02 | 0.04 | 0.06 | 0.07 |
| 10 kW | 0.00 | 0.00 | 0.00 | 0.00 | 0.00 | 0.02 | 0.04 | 0.06 | 0.07 | 0.09 | 0.10 | 0.11 |
| 15 kW | 0.00 | 0.00 | 0.00 | 0.02 | 0.04 | 0.06 | 0.08 | 0.10 | 0.12 | 0.14 | 0.16 | 0.18 |
| 20 kW | 0.00 | 0.00 | 0.02 | 0.04 | 0.06 | 0.08 | 0.09 | 0.11 | 0.13 | 0.15 | 0.17 | 0.19 |

## Large Cabinet: 36-60

| STATIC | STANDARD CFM (SCFM) | | | | | | | | | | | | | | |
|---|---|---|---|---|---|---|---|---|---|---|---|---|---|---|---|
| | 1100 | 1200 | 1300 | 1400 | 1500 | 1600 | 1700 | 1800 | 1900 | 2000 | 2100 | 2200 | 2300 | 2400 | 2500 |
| 5 kW | 0.00 | 0.00 | 0.00 | 0.01 | 0.02 | 0.03 | 0.04 | 0.05 | 0.06 | 0.07 | 0.08 | 0.09 | 0.10 | 0.11 | 0.12 |
| 10 kW | 0.00 | 0.00 | 0.01 | 0.02 | 0.03 | 0.04 | 0.05 | 0.06 | 0.07 | 0.08 | 0.09 | 0.10 | 0.11 | 0.12 | 0.13 |
| 15 kW | 0.00 | 0.02 | 0.03 | 0.04 | 0.05 | 0.06 | 0.07 | 0.08 | 0.09 | 0.10 | 0.11 | 0.12 | 0.13 | 0.14 | 0.15 |
| 20 kW | 0.02 | 0.03 | 0.04 | 0.05 | 0.06 | 0.07 | 0.08 | 0.09 | 0.10 | 0.11 | 0.12 | 0.13 | 0.14 | 0.15 | 0.16 |

**Manufacturer reserves the right to change, at any time, specifications and designs without notice and without obligations.**

## Accessories

| DESCRIPTION | | USED WITH | PART NO. |
|---|---|---|---|
| Flat Roof Curbs | 14-in. | 24 | CPRFCURB011B00** |
| | | 36-60 | CPRFCURB013B00 |
| Adapter Curb | Small Cabinet | 24 | CPADCURB001A00 |
| | Large Cabinet | 36-60 | CPADCURB002A00 |
| Gasket Kit for existing roof curb with new base rail unit | | All | CPGSKTKIT001A00 |
| Vertical Economizer with Jade Honeywell W7220 controller, Honeywell communicating actuator, and dry bulb sensor. (Contact MicroMetl Customer Service at 1-800-662-4822 to order.) | | 24 | ECD-SDSML-JC2-ADB* |
| | | 36 | ECD-SDLGS-JC2-ADB* |
| | | 48-60 | ECD-SDLGB-JC2-ADB* |
| Horizontal Economizer with Jade Honeywell W7220 controller, Honeywell communicating actuator, and dry bulb sensor. (Contact MicroMetl Customer Service at 1-800-662-4822 to order.) | | 24 | ECH-SDSML-JC2-ADB* |
| | | 36 | ECH-SDLGS-JC2-ADB* |
| | | 48-60 | ECH-SDLGB-JC2-ADB* |
| Economizer - Relay Kit | | 36-60 | CPRLYKIT001B00 |
| Manual Outside Air Damper - External w/Filter Rack and 1-in. filters | | 24 | CPMANDPR007A00 |
| | | 36 | CPMANDPR008A00 |
| | | 48-60 | CPMANDPR009A00 |
| Internal Filter Rack (includes 1-in. filters) | | 24 | CPFILTRK007A00 |
| | | 36 | CPFILTRK008A00 |
| | | 48-60 | CPFILTRK009A00 |
| Low Ambient Control (Pressure Switch) | | All | KSALA0301410 |
| Isolation Relay (Used with Low Ambient Control) | | All | KHAIR0201AAA |
| Time Guard II | | All | CRTIMEGD001A00 |
| Square-to-Round Duct Transitions (1 set of 2) | | 24-48 | CPDUCFLG002A00 |
| Compressor Start Kit | | All Single Phase | CPHSTART002A00 |
| 240V Crankcase Heater | | 24-36 (208/230-1) | CPCRKHTR008A00 |
| | | 48-60 (208/230-1) | CPCRKHTR004A00 |
| | | 36-60 (208/230-3) | Standard |
| 460V Crankcase Heater | | 36 (460-3), 48-60 (460-3) | Standard |

**CPRFCURB011B00 can be used with 36-60 size units with some overhang.
*Contact MicroMetl customer Service at 1-800-662-4822

## Electric Heaters

| Catalog Ordering No. | Nominal Capacity (kW) | Fuse Qty | Used With Sizes | | | |
|---|---|---|---|---|---|---|
| | | | 24 | 36 | 48 | 60 |
| **ELECTRIC HEATERS (208/230 — SINGLE PHASE — 60 Hz)** | | | | | | |
| CPHEATER052B00 | 5.0 | - | X | X | | |
| CPHEATER064B00 | 5.0 | 4 | X | X | X | X |
| CPHEATER069B00 | 7.2 | - | X | | | |
| CPHEATER070B00 | 7.2 | 4 | X | X | X | X |
| CPHEATER050B00 | 10.0 | 4 | X | X | X | X |
| CPHEATER066B00 | 15.0 | 6 | | X | X | X |
| CPHEATER054B00 | 20.0 | 6 | | | X | X |
| **ELECTRIC HEATERS (208/230 — THREE PHASE — 60 Hz)** | | | | | | |
| CPHEATER055B00 | 5.0 | - | | X | X | X |
| CPHEATER056B00 | 10.0 | - | | X | X | |
| CPHEATER068B00 | 10.0 | 6 | | X | X | X |
| CPHEATER058B00 | 15.0 | 6 | | X | X | X |
| CPHEATER059B00 | 20.0 | 6 | | | X | X |
| **ELECTRIC HEATERS (460 — THREE PHASE — 60 Hz)** | | | | | | |
| CPHEATER061B00 | 10.0 | - | | X | X | X |
| CPHEATER062B00 | 15.0 | - | | X | X | X |
| CPHEATER063B00 | 20.0 | - | | | X | X |

NOTE: Electric heaters are rated at 240v. Refer to Multiplication Factors table for other voltages.
X = Approved combinations.

## Minimum Airflow for Safe Electric Heater Operation (CFM)

| SIZE | 24 | 36 | 48 | 60 |
|---|---|---|---|---|
| Cfm | 800 | 1200 | 1600 | 1750 |

**Manufacturer reserves the right to change, at any time, specifications and designs without notice and without obligations.**

# 605E 24 Unit Dimensions

| COOLING CAPACITY | UNIT WT. | | UNIT HEIGHT IN/MM | CENTER OF GRAVITY IN/MM | | | | | |
|---|---|---|---|---|---|---|---|---|---|
| | LB | KG | "A" | X | | Y | | Z | |
| 24 | 382 | 173.3 | 51-3/4 1315 | 20-1/2 | 520.7 | 15-3/4 | 400.1 | 23.0 | 584.2 |

| UNIT | CORNER WEIGHT LB/KG | | | | | | | |
|---|---|---|---|---|---|---|---|---|
| | "1" | | "2" | | "3" | | "4" | |
| 24 | 57.3 | 26.0 | 76.4 | 34.7 | 114.6 | 52.0 | 133.7 | 60.7 |

NOTE: 1. ALL TABLE DATA RELEVANT FOR ALL FACTORY INSTALLED OPTIONS EXCEPT ECONOMIZER.
2. * - INDICATES ALL FIOP CODES FOR THE MODELS LISTED.

**REQUIRED CLEARANCES TO COMBUSTIBLE MATL.**

| | INCHES [MM] |
|---|---|
| TOP OF UNIT | 14 [355.6] |
| DUCT SIDE OF UNIT | 2 [50.8] |
| SIDE OPPOSITE DUCTS | 14 [355.6] |
| BOTTOM OF UNIT | 0 [0.0] |
| ELECTRICAL PANEL | 36 [914.4] |

**NEC. REQUIRED CLEARANCES.**

| | INCHES [MM] |
|---|---|
| BETWEEN UNITS, POWER ENTRY SIDE | 42 [1066.8] |
| UNIT AND UNGROUNDED SURFACES, POWER ENTRY SIDE | 36 [914.0] |
| UNIT AND BLOCK OR CONCRETE WALLS AND OTHER GROUNDED SURFACES, POWER ENTRY SIDE | 42 [1066.8] |

**REQUIRED CLEARANCE FOR OPERATION AND SERVICING**

| | INCHES [MM] |
|---|---|
| EVAP. COIL ACCESS SIDE | 36 [914.0] |
| POWER ENTRY SIDE | 42 [1066.8] |
| (EXCEPT FOR NEC REQUIREMENTS) | |
| UNIT TOP | 48 [1219.2] |
| SIDE OPPOSITE DUCTS | 36 [914.0] |
| DUCT PANEL | 12 [304.8]* |

*MINIMUM DISTANCES:IF UNIT IS PLACED LESS THAN 12 [304.8] FROM WALL SYSTEM,THEN SYSTEM PERFORMANCE MAYBE COMPROMISED.

DIMENSIONS IN [] ARE IN MILLIMETERS

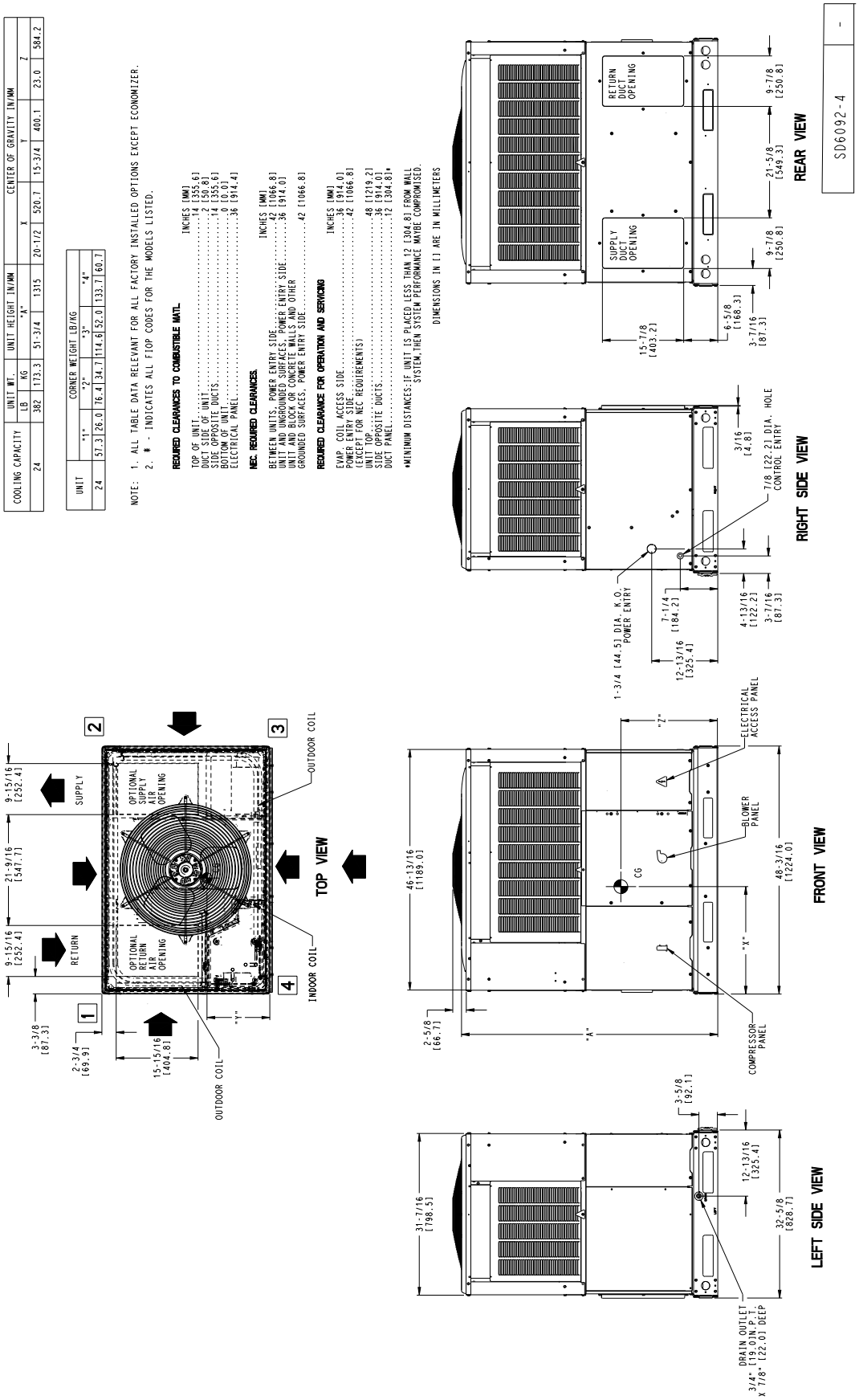


A250108

# 605E 36-60 Unit Dimensions

| COOLING CAPACITY | UNIT WT. | | UNIT HEIGHT IN/MM | | CENTER OF GRAVITY IN/MM | | | | | |
|---|---|---|---|---|---|---|---|---|---|---|
| | LB | KG | "A" | | X | | Y | | Z | |
| 36 | 428 | 194.2 | 50-3/4 | 1289 | 20-1/4 | 514.4 | 17-1/2 | 444.5 | 17-5/8 | 447.7 |
| 48 | 479 | 217.3 | 54-3/4 | 1391 | 20-1/4 | 514.4 | 17-1/2 | 444.5 | 18 | 457.2 |
| 60 | 533 | 241.8 | 54-3/4 | 1391 | 20-1/4 | 514.4 | 17-1/2 | 444.5 | 18 | 457.2 |

| UNIT | CORNER WEIGHTS LB/KG | | | | | | | |
|---|---|---|---|---|---|---|---|---|
| | "1" | | "2" | | "3" | | "4" | |
| 36 | 64.2 | 29.1 | 85.6 | 38.8 | 128.4 | 58.3 | 148.9 | 67.6 |
| 48 | 71.9 | 32.6 | 95.8 | 43.5 | 143.7 | 65.2 | 167.7 | 76.1 |
| 60 | 80.0 | 36.3 | 106.6 | 48.4 | 159.9 | 72.5 | 186.6 | 84.6 |

NOTE: 1. ALL TABLE DATA RELEVANT FOR ALL FACTORY INSTALLED OPTIONS EXCEPT ECONOMIZER.
2. * - INDICATES ALL FIOP CODES FOR THE MODELS LISTED.

**REQUIRED CLEARANCES TO COMBUSTIBLE MATL.**

| | INCHES [MM] |
|---|---|
| TOP OF UNIT | 14 [355.6] |
| DUCT SIDE OF UNIT | 2 [50.8] |
| SIDE OPPOSITE DUCTS | 14 [355.6] |
| BOTTOM OF UNIT | 0 [0.0] |
| ELECTRICAL PANEL | 36 [914.4] |

**NEC. REQUIRED CLEARANCES.**

| | INCHES [MM] |
|---|---|
| BETWEEN UNITS, POWER ENTRY SIDE | 42 [1066.8] |
| UNIT AND UNGROUNDED SURFACES, POWER ENTRY SIDE | 36 [914.0] |
| UNIT AND BLOCK OR CONCRETE WALLS AND OTHER GROUNDED SURFACES, POWER ENTRY SIDE | 42 [1066.8] |

**REQUIRED CLEARANCE FOR OPERATION AND SERVICING**

| | INCHES [MM] |
|---|---|
| EVAP. COIL ACCESS SIDE | 36 [914.0] |
| POWER ENTRY SIDE | 42 [1066.8] |
| (EXCEPT FOR NEC REQUIREMENTS) | |
| UNIT TOP | 48 [1219.2] |
| SIDE OPPOSITE DUCTS | 36 [914.0] |
| DUCT PANEL | 12 [304.8]* |

*MINIMUM DISTANCES:IF UNIT IS PLACED LESS THAN 12 [304.8] FROM WALL SYSTEM,THEN SYSTEM PERFORMANCE MAYBE COMPROMISED.
DIMENSIONS IN [] ARE IN MM

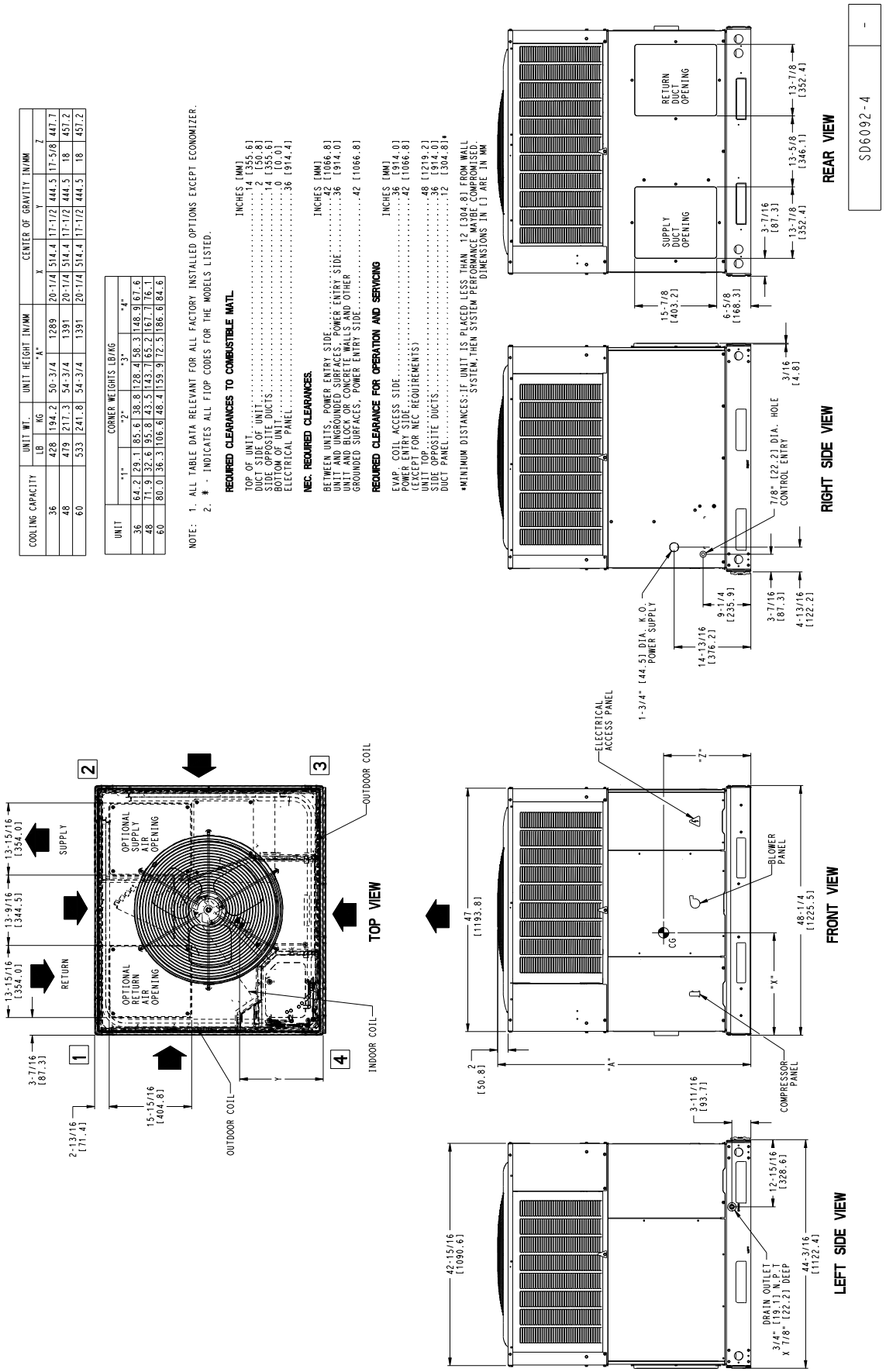


A250109

# Roof Curb Accessory

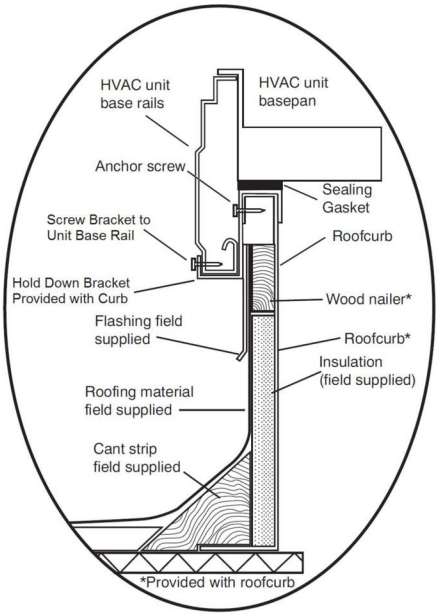


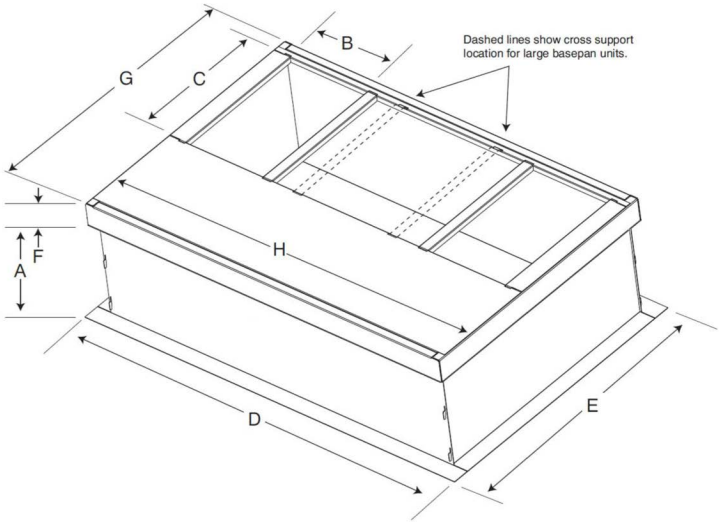


SMALL/COMMON CURB

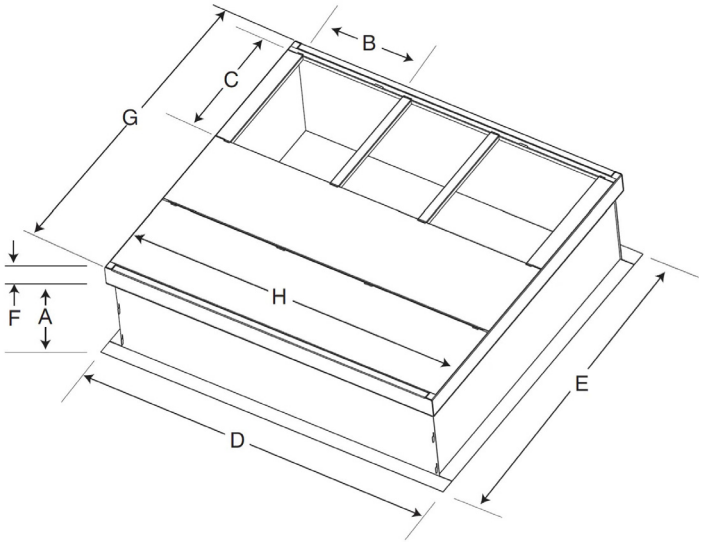


LARGE CURB

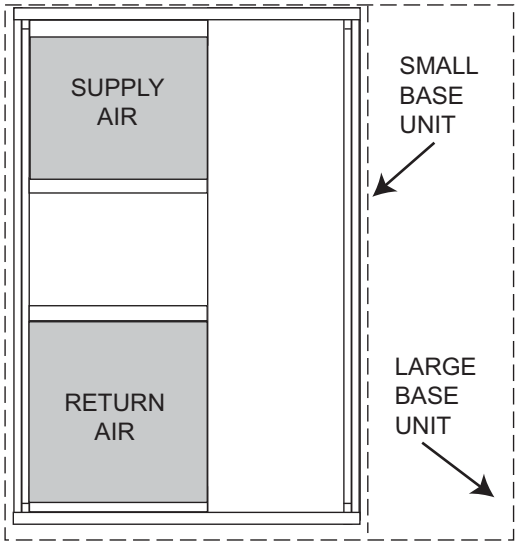


UNIT PLACEMENT ON COMMON CURB

SMALL OR LARGE BASE UNIT

A180216

| UNIT SIZE | CATALOG NUMBER | A IN. (mm) | B (small/common base) IN. (mm)* | B (large base) IN. (mm)* | C IN. (mm) | D IN. (mm) | E IN. (mm) | F IN. (mm) | G IN. (mm) | H IN. (mm) |
|---|---|---|---|---|---|---|---|---|---|---|
| Small or Large | CPRFCURB011B00 | 14 (356) | 10 (254) | 14 (356) | 16 (406) | 47.8 (1214) | 32.4 (822) | 2.7 (69) | 30.6 (778) | 46.1 (1170) |
| Large | CPRFCURB013B00 | 14 (356) | 14 (356) | | | | 43.9 (1116) | | 42.2 (1072) | |

*. * Part Number CPRCURB011B00 can be used on both small and large basepan units. The cross supports must be located based on whether the unit is a small basepan or a large basepan.

NOTES:
1. Roof curb must be set up for unit being installed.
2. Seal strip must be applied, as required, to unit being installed.
3. Roof curb is made of 16-gauge steel.
4. Attach ductwork to curb (flanges of duct rest on curb).
5. Insulated panels: 1-in. (25.4 mm) thick fiberglass 1 lb. density.

**Manufacturer reserves the right to change, at any time, specifications and designs without notice and without obligations.**

# Selection Procedure (with example)

## Determine cooling and heating requirements at design conditions:

Given:

Required Cooling Capacity (TC) ..... 34,000 Btuh

Sensible Heat Capacity (SHC) ..... 24,000 Btuh

Required Heating Capacity ..... 15,000 Btuh

Condenser Entering Air Temperature ..... 95°F(35°C)

Indoor-Air Temperature ..... 80°F (26°C) edb
..... 67°F (19°C) ewb

Evaporator Air Quantity ..... 1200 CFM

External Static Pressure ..... 0.20 IN. W.C.

Electrical Characteristics ..... 230-1-60

## Select unit based on required cooling capacity.

Enter Net Cooling Capacities table at condenser entering temperature of 95°F (35°C), indoor air entering at 1200 cfm and 67°F (19°C) ewb (entering wet bulb). The unit will provide a total capacity of 35,400 Btuh and a SHC of 26,500 Btuh.

## Select electric heat.

The required heating capacity is 15,000 Btuh.

Determine additional electric heat capacity in kW.

$$\frac{15{,}000 \text{ Btuh}}{3414 \text{ Btuh/kW}} = 4.4 \text{ kW of heat required}$$

Enter the electric Heater Packages table for 208/240, single-phase, A36 unit. The 5 kW heater at 240v most closely satisfies the heating required. To calculate kW at the 230v, multiply the heater kW by multiplication factor 0.92 found in the Wattage Multiplication Factors table.

5 kW x 0.92 = 4.60 kW

4.60 kW x 3414 = 15,704 Btuh

## Determine fan speed and power requirements at design conditions.

Before entering the air delivery tables, calculate the total static pressure required. From the given example, the Wet Coil Pressure Drop Table, and the Filter Pressure Drop Table:

| | |
|---|---|
| External Static Pressure | 0.200 IN. W.C. |
| Filter | 0.060 IN. W.C. |
| Wet Coil Pressure Drop | 0.060 IN. W.C. |
| Total Static Pressure | 0.320 IN. W.C. |

Enter the table for Wet Coil Air Delivery—horizontal discharge, 230. At 0.30 IN. W.C. ESP (external static pressure) and medium speed, the fan will deliver 1294 cfm.

## Select unit that corresponds to power source available.

The Electrical Data Table shows that the unit is designed to operate at 230-1-60.

# Performance Data

## 024 High Cool

| EVAPORATOR AIR | | CONDENSER ENTERING AIR TEMPERATURES °F (°C) | | | | | | | | | | | | | | | | | |
|---|---|---|---|---|---|---|---|---|---|---|---|---|---|---|---|---|---|---|---|
| | | 75 (23.9) | | | 85 (29.4) | | | 95 (35) | | | 105 (40.6) | | | 115 (46.1) | | | 125 (51.7) | | |
| | | Capacity MBtuh | | Total Sys KW | Capacity MBtuh | | Total Sys KW | Capacity MBtuh | | Total Sys KW | Capacity MBtuh | | Total Sys KW | Capacity MBtuh | | Total Sys KW | Capacity MBtuh | | Total Sys KW |
| CFM/BF | EWB | Total | Sens | | Total | Sens | | Total | Sens | | Total | Sens | | Total | Sens | | Total | Sens | |
| 700/.08 | 57 (13.8) | 20.9 | 20.9 | 1.5 | 19.7 | 19.7 | 1.6 | 18.4 | 18.4 | 1.8 | 17.0 | 17.0 | 2.0 | 14.5 | 14.5 | 2.2 | 12.2 | 12.2 | 2.7 |
| | 62 (16.6) | 21.7 | 20.9 | 1.5 | 20.2 | 19.9 | 1.6 | 18.9 | 18.6 | 1.8 | 17.4 | 17.1 | 2.0 | 14.9 | 14.7 | 2.2 | 12.5 | 12.3 | 2.7 |
| | 63* (17.2) | 22.2 | 16.9 | 1.5 | 20.6 | 16.2 | 1.6 | 19.1 | 15.3 | 1.8 | 17.4 | 14.9 | 2.0 | 14.8 | 13.5 | 2.2 | 12.1 | 11.8 | 2.7 |
| | 67 (19.4) | 23.8 | 17.6 | 1.5 | 22.2 | 16.9 | 1.6 | 20.5 | 16.0 | 1.8 | 18.7 | 15.5 | 2.0 | 15.9 | 14.0 | 2.2 | 13.0 | 12.7 | 2.7 |
| | 72 (22.2) | 26.0 | 14.0 | 1.5 | 24.2 | 13.4 | 1.6 | 22.4 | 12.6 | 1.8 | 20.4 | 12.1 | 2.0 | 17.3 | 10.8 | 2.2 | 14.2 | 9.6 | 2.7 |
| 855/.09 | 57 (13.8) | 23.4 | 23.4 | 1.5 | 22.1 | 22.1 | 1.7 | 20.6 | 20.6 | 1.8 | 19.0 | 19.0 | 2.0 | 16.3 | 16.3 | 2.3 | 13.7 | 13.7 | 2.7 |
| | 62 (16.6) | 23.7 | 23.2 | 1.5 | 22.1 | 22.1 | 1.7 | 20.6 | 20.6 | 1.8 | 19.0 | 19.0 | 2.0 | 16.3 | 16.3 | 2.3 | 13.7 | 13.7 | 2.7 |
| | 63* (17.2) | 23.9 | 18.7 | 1.5 | 22.3 | 18.0 | 1.7 | 20.7 | 17.0 | 1.8 | 18.8 | 16.5 | 2.0 | 16.0 | 15.0 | 2.3 | 13.1 | 13.1 | 2.7 |
| | 67 (19.4) | 25.8 | 19.5 | 1.5 | 24.0 | 18.8 | 1.7 | 22.2 | 17.7 | 1.9 | 20.2 | 17.2 | 2.0 | 17.2 | 15.6 | 2.3 | 14.1 | 14.1 | 2.7 |
| | 72 (22.2) | 28.1 | 15.6 | 1.5 | 26.1 | 14.8 | 1.7 | 24.3 | 13.9 | 1.9 | 22.0 | 13.4 | 2.1 | 18.7 | 12.0 | 2.3 | 15.4 | 10.7 | 2.7 |
| 900/.09 | 57 (13.8) | 23.7 | 23.4 | 1.5 | 22.3 | 22.1 | 1.7 | 20.8 | 20.6 | 1.9 | 19.2 | 19.0 | 2.1 | 16.5 | 16.3 | 2.3 | 13.8 | 13.7 | 2.7 |
| | 62 (16.6) | 23.9 | 23.4 | 1.5 | 22.3 | 22.1 | 1.7 | 20.9 | 20.6 | 1.9 | 19.2 | 19.0 | 2.1 | 16.5 | 16.3 | 2.3 | 13.8 | 13.7 | 2.7 |
| | 63* (17.2) | 24.2 | 18.7 | 1.5 | 22.5 | 18.0 | 1.7 | 20.9 | 17.0 | 1.9 | 19.0 | 16.5 | 2.1 | 16.1 | 15.0 | 2.3 | 13.2 | 13.1 | 2.7 |
| | 67 (19.4) | 26.0 | 19.5 | 1.5 | 24.2 | 18.8 | 1.7 | 22.4 | 17.7 | 1.9 | 20.4 | 17.2 | 2.1 | 17.3 | 15.6 | 2.3 | 14.2 | 14.1 | 2.7 |
| | 72 (22.2) | 28.4 | 15.6 | 1.6 | 26.4 | 14.8 | 1.7 | 24.5 | 13.9 | 1.9 | 22.3 | 13.4 | 2.1 | 18.9 | 12.0 | 2.3 | 15.5 | 10.7 | 2.7 |

See Legend and Notes on page 18.

## 024 High Heat

| INDOOR AIR | | OUTDOOR COIL ENTERING AIR TEMPERATURE | | | | | | | | | | | | | | | | | | | | | | | |
|---|---|---|---|---|---|---|---|---|---|---|---|---|---|---|---|---|---|---|---|---|---|---|---|---|---|
| | | -10°F (-23.3°C) | | | 0°F (-17.8°C) | | | 10°F (-12.2°C) | | | 20°F (-6.7°C) | | | 30°F (-1.1°C) | | | 40°F (4.4°C) | | | 50°F (8.3°C) | | | 60°F (15.6°C) | | |
| EDB | CFM | Capacity (Mbtuh) | | Total Sys kW | Capacity (Mbtuh) | | Total Sys kW | Capacity (Mbtuh) | | Total Sys kW | Capacity (Mbtuh) | | Total Sys kW | Capacity (Mbtuh) | | Total Sys kW | Capacity (Mbtuh) | | Total Sys kW | Capacity (Mbtuh) | | Total Sys kW | Capacity (Mbtuh) | | Total Sys kW |
| | | Total | Integ | | Total | Integ | | Total | Integ | | Total | Integ | | Total | Integ | | Total | Integ | | Total | Integ | | Total | Integ | |
| 65°F (18.3°C) | 700 | 5.7 | 5.3 | 1.3 | 7.5 | 6.9 | 1.3 | 10.4 | 9.6 | 1.4 | 13.2 | 11.9 | 1.4 | 15.6 | 13.7 | 1.5 | 20.1 | 20.1 | 1.6 | 24.9 | 24.9 | 1.7 | 31.2 | 31.2 | 1.8 |
| | 855 | 5.8 | 5.4 | 1.3 | 7.6 | 7.0 | 1.4 | 10.5 | 9.7 | 1.4 | 13.3 | 12.1 | 1.5 | 15.8 | 13.8 | 1.5 | 20.4 | 20.4 | 1.6 | 25.2 | 25.2 | 1.7 | 31.5 | 31.5 | 1.8 |
| | 900 | 5.9 | 5.4 | 1.3 | 7.7 | 7.1 | 1.4 | 10.6 | 9.7 | 1.4 | 13.4 | 12.1 | 1.4 | 15.8 | 13.8 | 1.5 | 20.4 | 20.4 | 1.6 | 25.5 | 25.5 | 1.6 | 31.6 | 31.6 | 1.8 |
| 70°F (21.1°C) | 700 | 5.6 | 5.1 | 1.3 | 7.3 | 6.8 | 1.4 | 10.1 | 9.3 | 1.5 | 12.8 | 11.6 | 1.5 | 15.2 | 13.3 | 1.6 | 19.6 | 19.6 | 1.6 | 24.3 | 24.3 | 1.7 | 30.4 | 30.4 | 1.9 |
| | 855 | 5.7 | 5.2 | 1.4 | 7.4 | 6.8 | 1.4 | 10.2 | 9.4 | 1.5 | 13.0 | 11.9 | 1.5 | 15.3 | 13.9 | 1.6 | 19.8 | 19.8 | 1.7 | 24.5 | 24.5 | 1.8 | 30.7 | 30.7 | 1.9 |
| | 900 | 5.7 | 5.3 | 1.4 | 7.5 | 6.9 | 1.4 | 10.3 | 9.5 | 1.5 | 13.0 | 11.8 | 1.5 | 15.4 | 13.5 | 1.6 | 19.9 | 19.9 | 1.6 | 24.8 | 24.8 | 1.7 | 30.7 | 30.7 | 1.8 |
| 75°F (23.9°C) | 700 | 5.5 | 5.0 | 1.4 | 7.2 | 6.6 | 1.5 | 9.9 | 9.1 | 1.5 | 12.6 | 11.4 | 1.6 | 15.0 | 13.2 | 1.6 | 19.4 | 19.4 | 1.7 | 24.0 | 24.0 | 1.8 | 30.1 | 30.1 | 2.0 |
| | 855 | 5.6 | 5.1 | 1.4 | 7.3 | 6.7 | 1.5 | 10.0 | 9.2 | 1.5 | 12.7 | 11.5 | 1.6 | 15.2 | 13.3 | 1.7 | 19.6 | 19.6 | 1.7 | 24.3 | 24.3 | 1.8 | 30.4 | 30.4 | 1.9 |
| | 900 | 5.6 | 5.2 | 1.4 | 7.3 | 6.7 | 1.5 | 10.1 | 9.3 | 1.5 | 12.8 | 11.6 | 1.6 | 15.2 | 13.3 | 1.6 | 19.7 | 19.7 | 1.7 | 24.5 | 24.5 | 1.8 | 30.4 | 30.4 | 1.9 |

See Legend and Notes on page 18.

Manufacturer reserves the right to change, at any time, specifications and designs without notice and without obligations.

# Performance Data (Continued)

## 024 Low Cool

| EVAPORATOR AIR | | CONDENSER ENTERING AIR TEMPERATURES °F (°C) | | | | | | | | | | | | | | | | | |
|---|---|---|---|---|---|---|---|---|---|---|---|---|---|---|---|---|---|---|---|
| | | 75 (23.9) | | | 85 (29.4) | | | 95 (35) | | | 105 (40.6) | | | 115 (46.1) | | | 125 (51.7) | | |
| CFM/BF | EWB | Capacity MBtuh | | Total Sys KW | Capacity MBtuh | | Total Sys KW | Capacity MBtuh | | Total Sys KW | Capacity MBtuh | | Total Sys KW | Capacity MBtuh | | Total Sys KW | Capacity MBtuh | | Total Sys KW |
| | | Total | Sens | | Total | Sens | | Total | Sens | | Total | Sens | | Total | Sens | | Total | Sens | |
| 525/.04 | 57 (13.8) | 15.2 | 15.2 | 0.9 | 14.2 | 14.2 | 1.1 | 12.9 | 12.9 | 1.2 | 11.7 | 11.7 | 1.4 | 10.5 | 10.5 | 1.6 | 9.3 | 9.3 | 1.8 |
| | 62 (16.6) | 15.8 | 14.6 | 0.9 | 14.6 | 13.5 | 1.1 | 13.2 | 13.2 | 1.2 | 12.0 | 12.0 | 1.4 | 10.7 | 10.7 | 1.6 | 9.6 | 9.6 | 1.8 |
| | 63* (17.2) | 16.1 | 12.0 | 0.9 | 14.9 | 11.5 | 1.1 | 13.4 | 11.2 | 1.2 | 11.9 | 10.7 | 1.4 | 10.6 | 9.7 | 1.6 | 9.2 | 8.5 | 1.8 |
| | 67 (19.4) | 17.3 | 12.5 | 0.9 | 16.0 | 11.9 | 1.1 | 14.4 | 11.6 | 1.2 | 12.8 | 11.1 | 1.4 | 11.4 | 10.4 | 1.6 | 9.9 | 9.1 | 1.8 |
| | 72 (22.2) | 18.9 | 10.0 | 0.9 | 17.4 | 9.4 | 1.1 | 15.7 | 9.2 | 1.2 | 14.0 | 8.7 | 1.4 | 12.4 | 8.0 | 1.6 | 10.8 | 6.8 | 1.8 |
| 675/.06 | 57 (13.8) | 16.9 | 16.9 | 0.9 | 15.8 | 15.8 | 1.1 | 14.3 | 14.3 | 1.2 | 12.9 | 12.9 | 1.4 | 11.6 | 11.6 | 1.6 | 10.3 | 10.3 | 1.8 |
| | 62 (16.6) | 17.1 | 17.1 | 0.9 | 15.8 | 15.8 | 1.1 | 14.3 | 14.3 | 1.2 | 12.9 | 12.9 | 1.4 | 11.6 | 11.6 | 1.6 | 10.3 | 10.3 | 1.8 |
| | 63* (17.2) | 17.3 | 14.0 | 0.9 | 15.9 | 13.4 | 1.1 | 14.3 | 13.1 | 1.2 | 12.8 | 12.4 | 1.4 | 11.3 | 11.3 | 1.6 | 9.9 | 9.9 | 1.8 |
| | 67 (19.4) | 18.6 | 14.6 | 1.0 | 17.1 | 14.0 | 1.1 | 15.4 | 13.6 | 1.2 | 13.8 | 13.0 | 1.4 | 12.2 | 12.1 | 1.6 | 10.7 | 10.7 | 1.8 |
| | 72 (22.2) | 20.2 | 11.7 | 1.0 | 18.7 | 11.0 | 1.1 | 16.8 | 10.7 | 1.3 | 15.0 | 10.1 | 1.4 | 13.3 | 9.3 | 1.7 | 11.6 | 8.0 | 1.9 |
| 700/.06 | 57 (13.8) | 17.0 | 16.3 | 1.0 | 15.9 | 15.3 | 1.1 | 14.4 | 14.2 | 1.2 | 13.0 | 12.7 | 1.4 | 11.7 | 11.4 | 1.6 | 10.4 | 10.3 | 1.8 |
| | 62 (16.6) | 17.2 | 16.5 | 1.0 | 15.9 | 15.3 | 1.1 | 14.4 | 14.2 | 1.2 | 13.0 | 12.7 | 1.4 | 11.7 | 11.4 | 1.6 | 10.4 | 10.3 | 1.8 |
| | 63* (17.2) | 17.4 | 13.5 | 1.0 | 16.0 | 13.0 | 1.1 | 14.4 | 12.9 | 1.2 | 12.9 | 12.3 | 1.4 | 11.4 | 11.2 | 1.6 | 10.0 | 9.9 | 1.8 |
| | 67 (19.4) | 18.7 | 14.1 | 1.0 | 17.2 | 13.5 | 1.1 | 15.5 | 13.5 | 1.2 | 13.8 | 12.8 | 1.4 | 12.3 | 11.4 | 1.6 | 10.7 | 10.6 | 1.8 |
| | 72 (22.2) | 20.3 | 11.3 | 1.0 | 18.8 | 10.7 | 1.1 | 16.9 | 10.6 | 1.3 | 15.1 | 10.0 | 1.4 | 13.4 | 9.2 | 1.7 | 11.7 | 8.0 | 1.9 |

See Legend and Notes on page 18.

## 024 Low Heat

| INDOOR AIR | | OUTDOOR COIL ENTERING AIR TEMPERATURES °F (°C) | | | | | | | | | | | | | | | | | | | | |
|---|---|---|---|---|---|---|---|---|---|---|---|---|---|---|---|---|---|---|---|---|---|---|
| | | 0 (-17.8) | | | 10 (-12.2) | | | 20 (-6.7) | | | 30 (-1.1) | | | 40 (4.4) | | | 50 (10) | | | 60 (15.6) | | |
| EDB | CFM | Capacity MBtuh | | Total Sys KW | Capacity MBtuh | | Total Sys KW | Capacity MBtuh | | Total Sys KW | Capacity MBtuh | | Total Sys KW | Capacity MBtuh | | Total Sys KW | Capacity MBtuh | | Total Sys KW | Capacity MBtuh | | Total Sys KW |
| | | Total | Integ | | Total | Integ | | Total | Integ | | Total | Integ | | Total | Integ | | Total | Integ | | Total | Integ | |
| 65°F (18.3°C) | 525 | 4.9 | 4.5 | 0.9 | 5.7 | 5.3 | 1.0 | 7.3 | 6.6 | 1.0 | 10.4 | 9.1 | 1.0 | 13.1 | 13.1 | 1.1 | 16.2 | 16.2 | 1.2 | 20.2 | 20.2 | 1.2 |
| | 675 | 4.9 | 4.6 | 0.9 | 5.8 | 5.3 | 1.0 | 7.4 | 6.7 | 1.0 | 10.5 | 9.2 | 1.0 | 13.2 | 13.2 | 1.1 | 16.3 | 16.3 | 1.1 | 20.4 | 20.4 | 1.2 |
| | 700 | 5.0 | 4.6 | 0.9 | 5.8 | 5.4 | 0.9 | 7.4 | 6.7 | 1.0 | 10.6 | 9.2 | 1.0 | 13.2 | 13.2 | 1.1 | 16.5 | 16.5 | 1.1 | 20.5 | 20.5 | 1.1 |
| 70°F (21.1°C) | 525 | 4.8 | 4.4 | 1.0 | 5.6 | 5.1 | 1.0 | 7.1 | 6.4 | 1.1 | 10.1 | 8.9 | 1.1 | 12.7 | 12.7 | 1.2 | 15.7 | 15.7 | 1.2 | 19.7 | 19.7 | 1.3 |
| | 675 | 4.8 | 4.4 | 1.0 | 5.7 | 5.2 | 1.0 | 7.2 | 6.6 | 1.1 | 10.3 | 9.3 | 1.1 | 12.9 | 12.9 | 1.1 | 15.9 | 15.6 | 1.2 | 19.9 | 19.9 | 1.2 |
| | 700 | 4.8 | 4.5 | 0.9 | 5.7 | 5.2 | 1.0 | 7.2 | 6.5 | 1.0 | 10.3 | 9.0 | 1.0 | 12.9 | 12.9 | 1.1 | 16.1 | 16.1 | 1.1 | 19.9 | 19.9 | 1.2 |
| 75°F (23.9°C) | 525 | 4.7 | 4.3 | 1.0 | 5.5 | 5.0 | 1.1 | 7.0 | 6.3 | 1.1 | 10.0 | 8.8 | 1.1 | 12.6 | 12.6 | 1.2 | 15.6 | 15.6 | 1.3 | 19.5 | 19.5 | 1.3 |
| | 675 | 4.7 | 4.3 | 1.0 | 5.5 | 5.1 | 1.0 | 7.0 | 6.4 | 1.1 | 10.1 | 8.9 | 1.1 | 12.7 | 12.7 | 1.2 | 15.8 | 15.8 | 1.2 | 19.7 | 19.7 | 1.3 |
| | 700 | 4.8 | 4.4 | 1.0 | 5.6 | 5.1 | 1.0 | 7.1 | 6.4 | 1.1 | 10.2 | 8.9 | 1.1 | 12.8 | 12.8 | 1.1 | 15.9 | 15.9 | 1.2 | 19.7 | 19.7 | 1.2 |

See Legend and Notes on page 18.

Manufacturer reserves the right to change, at any time, specifications and designs without notice and without obligations.

# Performance Data (Continued)

## 036 High Cool

| EVAPORATOR AIR | | CONDENSER ENTERING AIR TEMPERATURES deg F | | | | | | | | | | | | | | | | | |
|---|---|---|---|---|---|---|---|---|---|---|---|---|---|---|---|---|---|---|---|
| | | 75 (23.9) | | | 85 (29.4) | | | 95 (35) | | | 105 (40.6) | | | 115 (46.1) | | | 125 (51.7) | | |
| CFM/BF | EWB | Capacity MBtuh | | Total Sys KW | Capacity MBtuh | | Total Sys KW | Capacity MBtuh | | Total Sys KW | Capacity MBtuh | | Total Sys KW | Capacity MBtuh | | Total Sys KW | Capacity MBtuh | | Total Sys KW |
| | | Total | Sens | | Total | Sens | | Total | Sens | | Total | Sens | | Total | Sens | | Total | Sens | |
| 1050/.08 | 57 (13.8) | 35.9 | 35.9 | 2.4 | 32.9 | 32.9 | 2.5 | 31.4 | 31.4 | 2.8 | 29.2 | 29.2 | 3.0 | 26.9 | 26.9 | 3.4 | 24.2 | 24.2 | 3.8 |
| | 62 (16.6) | 37.3 | 33.4 | 2.4 | 33.8 | 31.7 | 2.5 | 32.3 | 29.9 | 2.8 | 30.0 | 27.6 | 3.0 | 27.7 | 25.6 | 3.4 | 24.9 | 22.2 | 3.8 |
| | 63* (17.2) | 38.1 | 26.9 | 2.4 | 34.5 | 25.3 | 2.5 | 32.6 | 24.5 | 2.8 | 29.9 | 23.5 | 3.0 | 27.3 | 22.5 | 3.4 | 24.1 | 20.7 | 3.8 |
| | 67 (19.4) | 41.0 | 28.0 | 2.4 | 37.1 | 26.4 | 2.5 | 35.0 | 25.5 | 2.8 | 32.2 | 24.5 | 3.0 | 29.4 | 23.4 | 3.4 | 25.9 | 21.6 | 3.8 |
| | 72 (22.2) | 44.6 | 22.4 | 2.4 | 40.4 | 20.8 | 2.5 | 38.3 | 20.1 | 2.8 | 35.1 | 19.1 | 3.0 | 32.0 | 18.1 | 3.4 | 28.2 | 16.4 | 3.8 |
| 1200/.09 | 57 (13.8) | 37.7 | 36.1 | 2.4 | 34.5 | 33.2 | 2.5 | 32.9 | 31.1 | 2.8 | 30.6 | 28.7 | 3.0 | 28.2 | 26.6 | 3.5 | 25.4 | 23.1 | 3.8 |
| | 62 (16.6) | 38.1 | 34.7 | 2.4 | 34.5 | 32.9 | 2.5 | 32.9 | 31.1 | 2.8 | 30.6 | 28.7 | 3.0 | 28.2 | 26.6 | 3.5 | 25.4 | 23.1 | 3.8 |
| | 63* (17.2) | 38.5 | 28.0 | 2.4 | 34.9 | 26.3 | 2.5 | 33.0 | 25.4 | 2.8 | 30.3 | 24.4 | 3.0 | 27.7 | 23.4 | 3.5 | 24.4 | 21.5 | 3.8 |
| | 67 (19.4) | 41.4 | 29.1 | 2.4 | 37.5 | 27.4 | 2.6 | 35.4 | 26.5 | 2.8 | 32.6 | 25.4 | 3.0 | 29.7 | 24.4 | 3.5 | 26.2 | 22.4 | 3.8 |
| | 72 (22.2) | 45.1 | 23.3 | 2.5 | 40.9 | 21.7 | 2.6 | 38.7 | 20.8 | 2.9 | 35.5 | 19.8 | 3.1 | 32.4 | 18.8 | 3.5 | 28.6 | 17.0 | 3.9 |
| 1350/.10 | 57 (13.8) | 39.0 | 38.6 | 2.5 | 35.7 | 35.4 | 2.6 | 34.0 | 33.3 | 2.9 | 31.7 | 30.7 | 3.1 | 29.2 | 28.4 | 3.5 | 26.3 | 24.7 | 3.9 |
| | 62 (16.6) | 39.4 | 37.4 | 2.5 | 35.7 | 35.1 | 2.6 | 34.1 | 33.3 | 2.9 | 31.7 | 30.7 | 3.1 | 29.2 | 28.4 | 3.5 | 26.3 | 24.7 | 3.9 |
| | 63* (17.2) | 39.9 | 29.9 | 2.5 | 36.1 | 28.1 | 2.6 | 34.1 | 27.2 | 2.9 | 31.3 | 26.1 | 3.1 | 28.6 | 25.0 | 3.5 | 25.2 | 23.0 | 3.9 |
| | 67 (19.4) | 42.9 | 31.1 | 2.5 | 38.8 | 29.3 | 2.6 | 36.6 | 28.3 | 2.9 | 33.7 | 27.2 | 3.1 | 30.8 | 26.0 | 3.5 | 27.1 | 24.0 | 3.9 |
| | 72 (22.2) | 46.7 | 24.9 | 2.5 | 42.3 | 23.1 | 2.6 | 40.0 | 22.3 | 2.9 | 36.7 | 21.2 | 3.1 | 33.5 | 20.0 | 3.5 | 29.6 | 18.2 | 3.9 |

See Legend and Notes on page 18.

## 036 High Heat

| INDOOR AIR | | OUTDOOR COIL ENTERING AIR TEMPERATURE | | | | | | | | | | | | | | | | | | | | | | | |
|---|---|---|---|---|---|---|---|---|---|---|---|---|---|---|---|---|---|---|---|---|---|---|---|---|---|
| | | -10°F (-23.3°C) | | | 0°F (-17.8°C) | | | 10°F (-12.2°C) | | | 20°F (-6.7°C) | | | 30°F (-1.1°C) | | | 40°F (4.4°C) | | | 50°F (8.3°C) | | | 60°F (15.6°C) | | |
| EDB | CFM | Capacity (Mbtuh) | | Total Sys kW | Capacity (Mbtuh) | | Total Sys kW | Capacity (Mbtuh) | | Total Sys kW | Capacity (Mbtuh) | | Total Sys kW | Capacity (Mbtuh) | | Total Sys kW | Capacity (Mbtuh) | | Total Sys kW | Capacity (Mbtuh) | | Total Sys kW | Capacity (Mbtuh) | | Total Sys kW |
| | | Total | Integ | | Total | Integ | | Total | Integ | | Total | Integ | | Total | Integ | | Total | Integ | | Total | Integ | | Total | Integ | |
| 65°F (18.3°C) | 1050 | 9.2 | 8.5 | 2.3 | 12.1 | 11.1 | 2.4 | 16.6 | 15.3 | 2.5 | 21.1 | 19.1 | 2.6 | 23.6 | 20.6 | 2.7 | 29.5 | 29.5 | 2.8 | 36.6 | 36.6 | 3.0 | 38.7 | 38.7 | 3.2 |
| | 1200 | 9.3 | 8.6 | 2.3 | 12.2 | 11.2 | 2.3 | 16.8 | 15.5 | 2.4 | 21.3 | 19.3 | 2.5 | 23.8 | 20.9 | 2.6 | 29.8 | 29.8 | 2.7 | 37.0 | 37.0 | 2.9 | 39.1 | 39.1 | 3.0 |
| | 1350 | 9.5 | 8.7 | 2.3 | 12.4 | 11.4 | 2.4 | 17.0 | 15.6 | 2.5 | 21.5 | 19.4 | 2.5 | 24.0 | 21.0 | 2.6 | 30.0 | 30.0 | 2.7 | 37.3 | 37.3 | 2.9 | 39.3 | 39.3 | 3.0 |
| 70°F (21.1°C) | 1050 | 8.9 | 8.2 | 2.4 | 11.7 | 10.8 | 2.5 | 16.2 | 14.9 | 2.6 | 20.5 | 18.6 | 2.7 | 22.9 | 20.1 | 2.8 | 28.8 | 28.8 | 2.9 | 35.6 | 35.6 | 3.1 | 37.7 | 37.7 | 3.3 |
| | 1200 | 9.1 | 8.3 | 2.4 | 11.9 | 10.9 | 2.4 | 16.4 | 15.1 | 2.5 | 20.7 | 19.1 | 2.6 | 23.2 | 21.0 | 2.7 | 29.1 | 29.1 | 2.8 | 36.0 | 36.0 | 3.0 | 38.1 | 38.1 | 3.2 |
| | 1350 | 9.2 | 8.5 | 2.4 | 12.0 | 11.1 | 2.5 | 16.5 | 15.2 | 2.5 | 20.9 | 18.9 | 2.6 | 23.3 | 20.5 | 2.7 | 29.2 | 29.2 | 2.8 | 36.4 | 36.4 | 3.0 | 38.2 | 38.2 | 3.2 |
| 75°F (23.9°C) | 1050 | 8.8 | 8.1 | 2.5 | 11.5 | 10.6 | 2.6 | 15.9 | 14.6 | 2.7 | 20.1 | 18.2 | 2.8 | 22.7 | 19.9 | 2.9 | 28.5 | 28.5 | 3.1 | 35.3 | 35.3 | 3.2 | 37.3 | 37.3 | 3.4 |
| | 1200 | 8.9 | 8.2 | 2.5 | 11.6 | 10.7 | 2.5 | 16.0 | 14.8 | 2.6 | 20.3 | 18.4 | 2.7 | 23.0 | 20.1 | 2.8 | 28.8 | 28.8 | 2.9 | 35.6 | 35.6 | 3.1 | 37.7 | 37.7 | 3.3 |
| | 1350 | 9.0 | 8.3 | 2.5 | 11.8 | 10.9 | 2.6 | 16.2 | 14.9 | 2.6 | 20.5 | 18.5 | 2.7 | 23.1 | 20.2 | 2.8 | 28.9 | 28.9 | 2.9 | 36.0 | 36.0 | 3.1 | 37.8 | 37.8 | 3.3 |

See Legend and Notes on page 18.

Manufacturer reserves the right to change, at any time, specifications and designs without notice and without obligations.

# Performance Data (Continued)

## 036 Low Cool

| EVAPORATOR AIR | | CONDENSER ENTERING AIR TEMPERATURES °F (°C) | | | | | | | | | | | | | | | | | |
|---|---|---|---|---|---|---|---|---|---|---|---|---|---|---|---|---|---|---|---|
| | | 75 (23.9) | | | 85 (29.4) | | | 95 (35) | | | 105 (40.6) | | | 115 (46.1) | | | 125 (51.7) | | |
| CFM/BF | EWB | Capacity MBtuh | | Total Sys KW | Capacity MBtuh | | Total Sys KW | Capacity MBtuh | | Total Sys KW | Capacity MBtuh | | Total Sys KW | Capacity MBtuh | | Total Sys KW | Capacity MBtuh | | Total Sys KW |
| | | Total | Sens | | Total | Sens | | Total | Sens | | Total | Sens | | Total | Sens | | Total | Sens | |
| 775/.04 | 57 (13.8) | 24.2 | 24.2 | 1.4 | 23.2 | 23.2 | 1.7 | 21.3 | 21.3 | 1.9 | 19.3 | 19.3 | 2.2 | 17.4 | 17.4 | 2.5 | 15.6 | 15.6 | 2.7 |
| | 62 (16.6) | 25.1 | 23.2 | 1.4 | 23.9 | 22.7 | 1.7 | 21.9 | 21.9 | 1.9 | 19.8 | 19.8 | 2.2 | 17.9 | 17.9 | 2.5 | 16.0 | 16.0 | 2.7 |
| | 63* (17.2) | 25.6 | 18.7 | 1.4 | 24.4 | 18.1 | 1.7 | 22.1 | 16.5 | 1.9 | 19.8 | 15.2 | 2.2 | 17.7 | 15.0 | 2.5 | 15.5 | 14.8 | 2.7 |
| | 67 (19.4) | 27.5 | 19.5 | 1.4 | 26.2 | 18.9 | 1.7 | 23.8 | 17.2 | 2.0 | 21.3 | 15.8 | 2.2 | 19.0 | 15.6 | 2.5 | 16.7 | 15.4 | 2.7 |
| | 72 (22.2) | 30.0 | 15.6 | 1.5 | 28.5 | 14.9 | 1.7 | 26.0 | 13.5 | 2.0 | 23.2 | 12.3 | 2.2 | 20.7 | 12.0 | 2.5 | 18.2 | 11.6 | 2.8 |
| 900/.05 | 57 (13.8) | 25.8 | 25.6 | 1.5 | 24.8 | 24.1 | 1.7 | 22.7 | 21.3 | 2.0 | 20.6 | 18.9 | 2.2 | 18.5 | 18.0 | 2.5 | 16.6 | 16.6 | 2.8 |
| | 62 (16.6) | 26.0 | 24.5 | 1.5 | 24.8 | 23.9 | 1.7 | 22.7 | 21.3 | 2.0 | 20.6 | 18.9 | 2.2 | 18.5 | 18.0 | 2.5 | 16.6 | 16.6 | 2.8 |
| | 63 (17.2) | 26.3 | 19.8 | 1.5 | 25.0 | 19.2 | 1.7 | 22.7 | 17.4 | 2.0 | 20.4 | 16.0 | 2.2 | 18.2 | 15.8 | 2.5 | 15.9 | 15.6 | 2.8 |
| | 67 (19.4) | 28.3 | 20.6 | 1.5 | 26.9 | 20.0 | 1.7 | 24.4 | 18.1 | 2.0 | 21.9 | 16.7 | 2.2 | 19.5 | 16.5 | 2.5 | 17.2 | 16.3 | 2.8 |
| | 72 (22.2) | 30.9 | 16.5 | 1.5 | 29.3 | 15.8 | 1.8 | 26.7 | 14.3 | 2.0 | 23.9 | 13.0 | 2.3 | 21.3 | 12.7 | 2.5 | 18.7 | 12.2 | 2.8 |
| 1025/.06 | 57 (13.8) | 27.0 | 27.0 | 1.5 | 25.9 | 25.9 | 1.8 | 23.8 | 23.0 | 2.0 | 21.6 | 20.4 | 2.3 | 19.4 | 19.4 | 2.6 | 17.4 | 17.4 | 2.8 |
| | 62 (16.6) | 27.3 | 26.8 | 1.5 | 25.9 | 25.9 | 1.8 | 23.8 | 23.0 | 2.0 | 21.6 | 20.4 | 2.3 | 19.4 | 19.4 | 2.6 | 17.4 | 17.4 | 2.8 |
| | 63* (17.2) | 27.6 | 21.4 | 1.5 | 26.2 | 20.7 | 1.8 | 23.8 | 18.8 | 2.0 | 21.3 | 17.3 | 2.3 | 19.0 | 17.1 | 2.6 | 16.7 | 16.7 | 2.8 |
| | 67 (19.4) | 29.7 | 22.3 | 1.5 | 28.2 | 21.6 | 1.8 | 25.6 | 19.6 | 2.0 | 22.9 | 18.1 | 2.3 | 20.5 | 17.8 | 2.6 | 18.0 | 17.6 | 2.8 |
| | 72 (22.2) | 32.3 | 17.8 | 1.5 | 30.7 | 17.1 | 1.8 | 28.0 | 15.4 | 2.1 | 25.0 | 14.1 | 2.3 | 22.3 | 13.7 | 2.6 | 19.6 | 13.2 | 2.9 |

See Legend and Notes on page 18.

## 036 Low Heat

| INDOOR AIR | | OUTDOOR COIL ENTERING AIR TEMPERATURES °F (°C) | | | | | | | | | | | | | | | | | | | | |
|---|---|---|---|---|---|---|---|---|---|---|---|---|---|---|---|---|---|---|---|---|---|---|
| | | 0 (-17.8) | | | 10 (-12.2) | | | 20 (-6.7) | | | 30 (-1.1) | | | 40 (4.4) | | | 50 (10) | | | 60 (15.6) | | |
| EDB | CFM | Capacity MBtuh | | Total Sys KW | Capacity MBtuh | | Total Sys KW | Capacity MBtuh | | Total Sys KW | Capacity MBtuh | | Total Sys KW | Capacity MBtuh | | Total Sys KW | Capacity MBtuh | | Total Sys KW | Capacity MBtuh | | Total Sys KW |
| | | Total | Integ | | Total | Integ | | Total | Integ | | Total | Integ | | Total | Integ | | Total | Integ | | Total | Integ | |
| 65°F (18.3°C) | 775 | 7.6 | 7.0 | 1.8 | 10.5 | 9.7 | 1.9 | 13.3 | 12.0 | 2.0 | 16.2 | 14.2 | 2.0 | 20.3 | 20.3 | 2.2 | 25.2 | 25.2 | 2.2 | 31.5 | 31.5 | 2.4 |
| | 900 | 7.7 | 7.1 | 1.7 | 10.6 | 9.8 | 1.7 | 13.5 | 12.2 | 1.8 | 16.4 | 14.4 | 1.8 | 20.6 | 20.6 | 1.9 | 25.5 | 25.5 | 2.0 | 31.8 | 31.8 | 2.1 |
| | 1025 | 7.8 | 7.2 | 1.7 | 10.8 | 9.9 | 1.8 | 13.6 | 12.3 | 1.9 | 16.5 | 14.5 | 1.9 | 20.7 | 20.7 | 2.0 | 25.7 | 25.7 | 2.0 | 32.0 | 32.0 | 2.1 |
| 70°F (21.1°C) | 775 | 7.4 | 6.8 | 1.9 | 10.2 | 9.4 | 2.0 | 13.0 | 11.7 | 2.1 | 15.8 | 13.8 | 2.1 | 19.8 | 19.8 | 2.2 | 24.5 | 24.5 | 2.3 | 30.7 | 30.7 | 2.5 |
| | 900 | 7.5 | 6.9 | 1.7 | 10.3 | 9.5 | 1.8 | 13.1 | 12.1 | 1.9 | 16.0 | 14.4 | 1.9 | 20.0 | 20.0 | 2.0 | 24.8 | 24.8 | 2.1 | 31.0 | 31.0 | 2.2 |
| | 1025 | 7.6 | 7.0 | 1.8 | 10.5 | 9.6 | 1.8 | 13.2 | 12.0 | 1.9 | 16.1 | 14.1 | 2.0 | 20.2 | 20.2 | 2.0 | 25.0 | 25.0 | 2.1 | 31.1 | 31.1 | 2.2 |
| 75°F (23.9°C) | 775 | 7.3 | 6.7 | 2.0 | 10.0 | 9.2 | 2.1 | 12.7 | 11.5 | 2.2 | 15.6 | 13.7 | 2.2 | 19.6 | 19.6 | 2.3 | 24.3 | 24.3 | 2.4 | 30.4 | 30.4 | 2.6 |
| | 900 | 7.4 | 6.8 | 1.8 | 10.1 | 9.3 | 1.9 | 12.8 | 11.6 | 2.0 | 15.8 | 13.8 | 2.0 | 19.8 | 19.8 | 2.1 | 24.5 | 24.5 | 2.2 | 30.7 | 30.7 | 2.3 |
| | 1025 | 7.5 | 6.9 | 1.8 | 10.3 | 9.5 | 1.9 | 13.0 | 11.7 | 2.0 | 15.9 | 14.0 | 2.0 | 20.0 | 20.0 | 2.1 | 24.8 | 24.8 | 2.2 | 30.8 | 30.8 | 2.3 |

See Legend and Notes on page 18.

Manufacturer reserves the right to change, at any time, specifications and designs without notice and without obligations.

# Performance Data (Continued)

## 048 High Cool

| EVAPORATOR AIR | | CONDENSER ENTERING AIR TEMPERATURES °F (°C) | | | | | | | | | | | | | | | | | |
|---|---|---|---|---|---|---|---|---|---|---|---|---|---|---|---|---|---|---|---|
| | | 75 (23.9) | | | 85 (29.4) | | | 95 (35) | | | 105 (40.5) | | | 115 (46.1) | | | 125 (51.7) | | |
| CFM/BF | EWB | Capacity MBtuh | | Total Sys KW | Capacity MBtuh | | Total Sys KW | Capacity MBtuh | | Total Sys KW | Capacity MBtuh | | Total Sys KW | Capacity MBtuh | | Total Sys KW | Capacity MBtuh | | Total Sys KW |
| | | Total | Sens | | Total | Sens | | Total | Sens | | Total | Sens | | Total | Sens | | Total | Sens | |
| 1400/.09 | 57 (13.9) | 46.0 | 46.0 | 3.1 | 44.0 | 44.0 | 3.5 | 41.2 | 41.2 | 3.8 | 37.3 | 37.3 | 4.1 | 36.0 | 36.0 | 4.7 | 30.5 | 30.5 | 5.0 |
| | 62 (16.7) | 47.8 | 42.7 | 3.1 | 45.2 | 42.6 | 3.5 | 42.4 | 39.3 | 3.8 | 38.3 | 36.2 | 4.1 | 37.0 | 33.6 | 4.7 | 31.4 | 29.7 | 5.0 |
| | 63* (17.2) | 48.7 | 34.4 | 3.1 | 46.1 | 34.1 | 3.5 | 42.8 | 32.1 | 3.8 | 38.3 | 30.7 | 4.1 | 36.6 | 29.6 | 4.7 | 30.4 | 27.7 | 5.0 |
| | 67 (19.4) | 52.4 | 35.9 | 3.2 | 49.6 | 35.5 | 3.5 | 46.0 | 33.5 | 3.9 | 41.1 | 32.0 | 4.1 | 39.3 | 30.8 | 4.7 | 32.6 | 28.9 | 5.0 |
| | 72 (13.9) | 57.1 | 28.7 | 3.2 | 54.0 | 28.0 | 3.5 | 50.3 | 26.3 | 3.9 | 44.9 | 25.0 | 4.2 | 42.8 | 23.7 | 4.8 | 35.6 | 21.9 | 5.1 |
| 1600/.10 | 57 (13.9) | 48.2 | 46.2 | 3.2 | 46.1 | 44.6 | 3.5 | 43.2 | 40.9 | 3.9 | 39.1 | 37.6 | 4.2 | 37.8 | 34.9 | 4.8 | 32.0 | 30.9 | 5.1 |
| | 62 (16.7) | 48.8 | 44.3 | 3.2 | 46.1 | 44.2 | 3.5 | 43.2 | 40.9 | 3.9 | 39.1 | 37.6 | 4.2 | 37.8 | 34.9 | 4.8 | 32.0 | 30.9 | 5.1 |
| | 63* (17.2) | 49.3 | 35.8 | 3.2 | 46.6 | 35.4 | 3.5 | 43.3 | 33.4 | 3.9 | 38.7 | 31.9 | 4.2 | 37.0 | 30.7 | 4.8 | 30.7 | 28.8 | 5.1 |
| | 67 (19.4) | 53.0 | 37.2 | 3.2 | 50.1 | 36.9 | 3.6 | 46.5 | 34.8 | 3.9 | 41.6 | 33.2 | 4.2 | 39.8 | 32.0 | 4.8 | 33.0 | 30.0 | 5.1 |
| | 72 (13.9) | 57.8 | 29.8 | 3.3 | 54.6 | 29.1 | 3.6 | 50.8 | 27.4 | 4.0 | 45.4 | 25.9 | 4.2 | 43.3 | 24.6 | 4.8 | 36.0 | 22.8 | 5.2 |
| 1800/.11 | 57 (13.9) | 49.9 | 49.4 | 3.3 | 47.7 | 47.7 | 3.6 | 44.7 | 43.7 | 3.9 | 40.5 | 40.2 | 4.3 | 39.1 | 37.3 | 4.8 | 33.1 | 33.0 | 5.2 |
| | 62 (16.7) | 50.5 | 47.9 | 3.3 | 47.7 | 47.3 | 3.6 | 44.8 | 43.7 | 3.9 | 40.5 | 40.2 | 4.3 | 39.1 | 37.3 | 4.8 | 33.1 | 33.0 | 5.2 |
| | 63* (17.2) | 51.0 | 38.2 | 3.3 | 48.2 | 37.8 | 3.6 | 44.8 | 35.7 | 3.9 | 40.1 | 34.1 | 4.3 | 38.3 | 32.8 | 4.8 | 31.8 | 30.8 | 5.2 |
| | 67 (19.4) | 54.9 | 39.8 | 3.3 | 51.9 | 39.4 | 3.6 | 48.1 | 37.2 | 4.0 | 43.1 | 35.5 | 4.3 | 41.1 | 34.2 | 4.8 | 34.2 | 32.0 | 5.2 |
| | 72 (13.9) | 59.8 | 31.8 | 3.3 | 56.6 | 31.1 | 3.7 | 52.6 | 29.3 | 4.0 | 47.0 | 27.7 | 4.3 | 44.9 | 26.3 | 4.9 | 37.2 | 24.4 | 5.2 |

See Legend and Notes on page 18.

## 048 High Heat

| INDOOR AIR | | OUTDOOR COIL ENTERING AIR TEMPERATURE | | | | | | | | | | | | | | | | | | | | | | | |
|---|---|---|---|---|---|---|---|---|---|---|---|---|---|---|---|---|---|---|---|---|---|---|---|---|---|
| | | -10°F (-23.3°C) | | | 0°F (-17.8°C) | | | 10°F (-12.2°C) | | | 20°F (-6.7°C) | | | 30°F (-1.1°C) | | | 40°F (4.4°C) | | | 50°F (8.3°C) | | | 60°F (15.6°C) | | |
| EDB | CFM | Capacity (Mbtuh) | | Total Sys kW | Capacity (Mbtuh) | | Total Sys kW | Capacity (Mbtuh) | | Total Sys kW | Capacity (Mbtuh) | | Total Sys kW | Capacity (Mbtuh) | | Total Sys kW | Capacity (Mbtuh) | | Total Sys kW | Capacity (Mbtuh) | | Total Sys kW | Capacity (Mbtuh) | | Total Sys kW |
| | | Total | Integ | | Total | Integ | | Total | Integ | | Total | Integ | | Total | Integ | | Total | Integ | | Total | Integ | | Total | Integ | |
| 65°F (18.3°C) | 1400 | 11.8 | 10.9 | 2.8 | 15.5 | 14.3 | 2.9 | 21.4 | 19.7 | 3.0 | 27.1 | 24.5 | 3.1 | 33.0 | 28.9 | 3.3 | 39.9 | 39.9 | 3.4 | 47.0 | 47.0 | 3.8 | 52.0 | 52.0 | 4.2 |
| | 1600 | 12.0 | 11.0 | 2.8 | 15.7 | 14.4 | 2.9 | 21.6 | 19.9 | 3.0 | 27.4 | 24.8 | 3.1 | 33.4 | 29.2 | 3.2 | 40.3 | 40.3 | 3.3 | 47.5 | 47.5 | 3.6 | 52.6 | 52.6 | 4.0 |
| | 1800 | 12.2 | 11.2 | 2.9 | 15.9 | 14.6 | 2.9 | 21.8 | 20.1 | 3.0 | 27.6 | 25.0 | 3.1 | 33.6 | 29.4 | 3.2 | 40.5 | 40.5 | 3.4 | 48.0 | 48.0 | 3.7 | 52.8 | 52.8 | 4.0 |
| 70°F (21.1°C) | 1400 | 11.5 | 10.6 | 2.9 | 15.1 | 13.9 | 3.0 | 20.8 | 19.2 | 3.2 | 26.4 | 23.9 | 3.3 | 32.2 | 28.2 | 3.4 | 38.8 | 38.8 | 3.6 | 45.8 | 45.8 | 3.9 | 50.6 | 50.6 | 4.4 |
| | 1600 | 11.6 | 10.7 | 2.9 | 15.3 | 14.1 | 3.0 | 21.1 | 19.4 | 3.1 | 26.7 | 24.5 | 3.2 | 32.5 | 29.4 | 3.3 | 39.2 | 39.2 | 3.5 | 46.3 | 46.3 | 3.8 | 51.2 | 51.2 | 4.2 |
| | 1800 | 11.9 | 10.9 | 3.0 | 15.5 | 14.3 | 3.0 | 21.3 | 19.6 | 3.1 | 26.9 | 24.3 | 3.2 | 32.7 | 28.7 | 3.4 | 39.5 | 39.5 | 3.5 | 46.8 | 46.8 | 3.8 | 51.4 | 51.4 | 4.2 |
| 75°F (23.9°C) | 1400 | 11.3 | 10.4 | 3.1 | 14.8 | 13.6 | 3.2 | 20.4 | 18.8 | 3.3 | 25.9 | 23.4 | 3.4 | 31.8 | 27.9 | 3.5 | 38.4 | 38.4 | 3.7 | 45.3 | 45.3 | 4.1 | 50.1 | 50.1 | 4.6 |
| | 1600 | 11.4 | 10.5 | 3.0 | 15.0 | 13.8 | 3.1 | 20.6 | 19.0 | 3.2 | 26.1 | 23.7 | 3.3 | 32.2 | 28.2 | 3.4 | 38.9 | 38.9 | 3.6 | 45.8 | 45.8 | 3.9 | 50.7 | 50.7 | 4.4 |
| | 1800 | 11.6 | 10.7 | 3.1 | 15.2 | 14.0 | 3.2 | 20.8 | 19.2 | 3.3 | 26.4 | 23.9 | 3.4 | 32.4 | 28.4 | 3.5 | 39.1 | 39.1 | 3.6 | 46.3 | 46.3 | 3.9 | 50.9 | 50.9 | 4.4 |

See Legend and Notes on page 18.

Manufacturer reserves the right to change, at any time, specifications and designs without notice and without obligations.

# Performance Data (Continued)

## 048 Low Cool

| EVAPORATOR AIR | | CONDENSER ENTERING AIR TEMPERATURES °F (°C) | | | | | | | | | | | | | | | | | |
|---|---|---|---|---|---|---|---|---|---|---|---|---|---|---|---|---|---|---|---|
| | | 75 (23.9) | | | 85 (29.4) | | | 95 (35) | | | 105 (40.6) | | | 115 (46.1) | | | 125 (51.7) | | |
| CFM/BF | EWB | Capacity MBtuh | | Total Sys KW | Capacity MBtuh | | Total Sys KW | Capacity MBtuh | | Total Sys KW | Capacity MBtuh | | Total Sys KW | Capacity MBtuh | | Total Sys KW | Capacity MBtuh | | Total Sys KW |
| | | Total | Sens | | Total | Sens | | Total | Sens | | Total | Sens | | Total | Sens | | Total | Sens | |
| 1050/.05 | 57 (13.8) | 34.0 | 34.0 | 1.9 | 31.3 | 31.3 | 2.3 | 28.7 | 28.7 | 2.6 | 24.1 | 24.1 | 2.8 | 23.5 | 23.5 | 3.3 | 21.9 | 21.9 | 3.8 |
| | 62 (16.6) | 35.3 | 33.0 | 1.9 | 32.2 | 31.4 | 2.3 | 29.5 | 29.5 | 2.6 | 24.8 | 24.8 | 2.8 | 24.1 | 24.1 | 3.3 | 22.5 | 22.5 | 3.8 |
| | 63* (17.2) | 36.0 | 26.6 | 1.9 | 32.8 | 25.1 | 2.3 | 29.8 | 23.3 | 2.6 | 24.7 | 21.0 | 2.8 | 23.8 | 20.5 | 3.3 | 21.8 | 20.0 | 3.8 |
| | 67 (19.4) | 38.7 | 27.7 | 1.9 | 35.3 | 26.2 | 2.3 | 32.1 | 24.3 | 2.7 | 26.6 | 21.9 | 2.8 | 25.6 | 21.4 | 3.3 | 23.4 | 20.8 | 3.8 |
| | 72 (22.2) | 42.2 | 22.2 | 1.9 | 38.5 | 20.7 | 2.4 | 35.0 | 19.1 | 2.7 | 29.0 | 17.1 | 2.8 | 27.9 | 16.5 | 3.3 | 25.5 | 15.6 | 3.9 |
| 1200/.06 | 57 (13.8) | 35.6 | 35.6 | 1.9 | 32.9 | 32.9 | 2.4 | 30.1 | 29.7 | 2.7 | 25.3 | 25.3 | 2.8 | 24.6 | 24.2 | 3.3 | 23.0 | 22.3 | 3.9 |
| | 62 (16.6) | 36.0 | 34.3 | 1.9 | 32.9 | 32.6 | 2.4 | 30.2 | 29.7 | 2.7 | 25.3 | 25.3 | 2.8 | 24.6 | 24.2 | 3.3 | 23.0 | 22.3 | 3.9 |
| | 63* (17.2) | 36.4 | 27.7 | 1.9 | 33.2 | 26.1 | 2.4 | 30.2 | 24.2 | 2.7 | 25.0 | 21.8 | 2.8 | 24.1 | 21.3 | 3.3 | 22.0 | 20.8 | 3.9 |
| | 67 (19.4) | 39.1 | 28.8 | 1.9 | 35.7 | 27.2 | 2.4 | 32.4 | 25.2 | 2.7 | 26.9 | 22.8 | 2.8 | 25.9 | 22.2 | 3.3 | 23.7 | 21.6 | 3.9 |
| | 72 (22.2) | 42.6 | 23.1 | 2.0 | 38.9 | 21.5 | 2.4 | 35.4 | 19.9 | 2.8 | 29.3 | 17.7 | 2.8 | 28.2 | 17.1 | 3.3 | 25.8 | 16.2 | 3.9 |
| 1350/.06 | 57 (13.8) | 36.8 | 36.8 | 2.0 | 34.0 | 34.0 | 2.4 | 31.2 | 31.2 | 2.7 | 26.2 | 26.2 | 2.9 | 25.5 | 25.5 | 3.4 | 23.8 | 23.8 | 3.9 |
| | 62 (16.6) | 37.3 | 37.0 | 2.0 | 34.0 | 34.0 | 2.4 | 31.2 | 31.2 | 2.7 | 26.2 | 26.2 | 2.9 | 25.5 | 25.5 | 3.4 | 23.8 | 23.8 | 3.9 |
| | 63* (17.2) | 37.7 | 29.6 | 2.0 | 34.4 | 27.9 | 2.4 | 31.2 | 25.9 | 2.7 | 25.9 | 23.3 | 2.9 | 24.9 | 22.8 | 3.4 | 22.8 | 22.2 | 3.9 |
| | 67 (19.4) | 40.5 | 30.8 | 2.0 | 37.0 | 29.1 | 2.4 | 33.6 | 27.0 | 2.8 | 27.8 | 24.3 | 2.9 | 26.8 | 23.7 | 3.4 | 24.5 | 23.1 | 3.9 |
| | 72 (22.2) | 44.1 | 24.6 | 2.0 | 40.3 | 23.0 | 2.4 | 36.7 | 21.2 | 2.8 | 30.4 | 19.0 | 2.9 | 29.2 | 18.3 | 3.4 | 26.7 | 17.3 | 4.0 |

See Legend and Notes on page 18.

## 048 Low Heat

| Indoor Air | | Outdoor Coil Entering Air Temperatures °F (°C) | | | | | | | | | | | | | | | | | | | | |
|---|---|---|---|---|---|---|---|---|---|---|---|---|---|---|---|---|---|---|---|---|---|---|
| | | 0 (-17.8) | | | 10 (-12.2) | | | 20 (-6.7) | | | 30 (-1.1) | | | 40 (4.4) | | | 50 (10) | | | 60 (15.6) | | |
| EDB | CFM | Capacity MBtuh | | Total Sys KW | Capacity MBtuh | | Total Sys KW | Capacity MBtuh | | Total Sys KW | Capacity MBtuh | | Total Sys KW | Capacity MBtuh | | Total Sys KW | Capacity MBtuh | | Total Sys KW | Capacity MBtuh | | Total Sys KW |
| | | Total | Integ | | Total | Integ | | Total | Integ | | Total | Integ | | Total | Integ | | Total | Integ | | Total | Integ | |
| 65 (18.3) | 1050 | 10.3 | 9.5 | 2.2 | 12.7 | 11.6 | 2.3 | 18.0 | 16.3 | 2.4 | 22.2 | 19.4 | 2.4 | 27.6 | 27.6 | 2.6 | 32.9 | 32.9 | 2.9 | 37.7 | 37.7 | 3.0 |
| | 1200 | 10.4 | 9.6 | 2.0 | 12.8 | 11.8 | 2.1 | 18.2 | 16.5 | 2.2 | 22.4 | 19.6 | 2.2 | 27.8 | 27.8 | 2.3 | 33.3 | 33.3 | 2.6 | 38.1 | 38.1 | 2.7 |
| | 1350 | 10.6 | 9.7 | 2.0 | 13.0 | 11.9 | 2.1 | 18.4 | 16.7 | 2.2 | 22.6 | 19.8 | 2.2 | 28.0 | 28.0 | 2.3 | 33.6 | 33.6 | 2.6 | 38.2 | 38.2 | 2.7 |
| 70 (21.1) | 1050 | 10.0 | 9.2 | 2.3 | 12.3 | 11.3 | 2.4 | 17.6 | 15.9 | 2.5 | 21.6 | 18.9 | 2.5 | 26.8 | 26.8 | 2.7 | 32.1 | 32.1 | 3.0 | 36.7 | 36.7 | 3.1 |
| | 1200 | 10.1 | 9.3 | 2.1 | 12.5 | 11.5 | 2.1 | 17.8 | 16.3 | 2.3 | 21.8 | 19.7 | 2.3 | 27.1 | 27.1 | 2.4 | 32.4 | 32.4 | 2.7 | 37.1 | 37.1 | 2.8 |
| | 1350 | 10.3 | 9.5 | 2.1 | 12.6 | 11.6 | 2.2 | 17.9 | 16.2 | 2.3 | 22.0 | 19.3 | 2.3 | 27.3 | 27.3 | 2.4 | 32.7 | 32.7 | 2.7 | 37.2 | 37.2 | 2.8 |
| 75 (23.9) | 1050 | 9.8 | 9.0 | 2.4 | 12.1 | 11.1 | 2.5 | 17.2 | 15.6 | 2.6 | 21.4 | 18.7 | 2.7 | 26.6 | 26.6 | 2.8 | 31.7 | 31.7 | 3.1 | 36.3 | 36.3 | 3.3 |
| | 1200 | 9.9 | 9.1 | 2.1 | 12.2 | 11.2 | 2.2 | 17.4 | 15.8 | 2.4 | 21.6 | 18.9 | 2.4 | 26.8 | 26.8 | 2.5 | 32.1 | 32.1 | 2.8 | 36.7 | 36.7 | 2.9 |
| | 1350 | 10.1 | 9.3 | 2.2 | 12.4 | 11.4 | 2.3 | 17.6 | 15.9 | 2.4 | 21.8 | 19.1 | 2.4 | 27.0 | 27.0 | 2.5 | 32.4 | 32.4 | 2.8 | 36.9 | 36.9 | 2.9 |

See Legend and Notes on page 18.

Manufacturer reserves the right to change, at any time, specifications and designs without notice and without obligations.

# Performance Data (Continued)

## 060 High Cool

| EVAPORATOR AIR | | CONDENSER ENTERING AIR TEMPERATURES °F (°C) | | | | | | | | | | | | | | | | | |
|---|---|---|---|---|---|---|---|---|---|---|---|---|---|---|---|---|---|---|---|
| | | 75 (23.9) | | | 85 (29.4) | | | 95 (35) | | | 105 (40.5) | | | 115 (46.1) | | | 125 (51.7) | | |
| CFM/BF | EWB | Capacity MBtuh | | Total Sys | Capacity MBtuh | | Total Sys | Capacity MBtuh | | Total Sys | Capacity MBtuh | | Total Sys | Capacity MBtuh | | Total Sys | Capacity MBtuh | | Total Sys |
| | | Total | Sens | KW | Total | Sens | KW | Total | Sens | KW | Total | Sens | KW | Total | Sens | KW | Total | Sens | KW |
| 1675/.07 | 57 (13.9) | 56.8 | 56.8 | 3.8 | 55.1 | 55.1 | 4.1 | 51.7 | 51.7 | 4.6 | 41.9 | 41.9 | 4.9 | 38.2 | 38.2 | 5.1 | 35.1 | 35.1 | 5.5 |
| | 62 (16.7) | 59.1 | 53.5 | 3.8 | 56.7 | 51.2 | 4.1 | 53.3 | 48.5 | 4.6 | 43.1 | 40.3 | 4.9 | 39.3 | 37.7 | 5.1 | 36.1 | 33.9 | 5.5 |
| | 63* (17.2) | 60.3 | 43.1 | 3.8 | 57.8 | 41.0 | 4.1 | 53.9 | 39.6 | 4.6 | 43.1 | 34.3 | 4.9 | 38.9 | 33.2 | 5.1 | 35.0 | 31.6 | 5.5 |
| | 67 (19.4) | 64.8 | 44.9 | 3.8 | 62.2 | 42.7 | 4.2 | 57.9 | 41.3 | 4.6 | 46.3 | 35.7 | 4.9 | 41.8 | 34.6 | 5.1 | 37.6 | 32.9 | 5.5 |
| | 72 (13.9) | 70.6 | 36.0 | 3.8 | 66.5 | 33.7 | 4.2 | 59.5 | 32.5 | 4.7 | 50.5 | 27.8 | 4.9 | 45.5 | 26.6 | 5.2 | 41.0 | 25.0 | 5.6 |
| 1750/.07 | 57 (13.9) | 57.6 | 55.5 | 3.8 | 55.9 | 51.4 | 4.2 | 52.5 | 48.2 | 4.6 | 42.5 | 40.1 | 4.9 | 38.8 | 37.5 | 5.2 | 35.6 | 33.7 | 5.5 |
| | 62 (16.7) | 58.2 | 53.2 | 3.8 | 55.9 | 51.0 | 4.2 | 52.5 | 48.2 | 4.6 | 42.5 | 40.1 | 4.9 | 38.8 | 37.5 | 5.2 | 35.6 | 33.7 | 5.5 |
| | 63* (17.2) | 58.9 | 42.9 | 3.8 | 56.5 | 40.8 | 4.2 | 52.6 | 39.4 | 4.6 | 42.0 | 34.1 | 4.9 | 37.9 | 33.0 | 5.2 | 34.2 | 31.4 | 5.5 |
| | 67 (19.4) | 63.3 | 44.7 | 3.8 | 60.7 | 42.5 | 4.2 | 56.5 | 41.0 | 4.7 | 45.2 | 35.5 | 4.9 | 40.8 | 34.4 | 5.2 | 36.7 | 32.7 | 5.5 |
| | 72 (13.9) | 69.0 | 35.8 | 3.9 | 66.2 | 33.6 | 4.2 | 61.8 | 32.3 | 4.7 | 49.3 | 27.7 | 4.9 | 44.5 | 26.5 | 5.2 | 40.0 | 24.9 | 5.6 |
| 2000/.08 | 57 (13.9) | 59.2 | 59.2 | 3.9 | 57.5 | 55.8 | 4.2 | 54.0 | 52.4 | 4.7 | 43.7 | 43.6 | 5.0 | 39.9 | 39.9 | 5.3 | 36.6 | 36.6 | 5.6 |
| | 62 (16.7) | 59.9 | 58.4 | 3.9 | 57.5 | 55.4 | 4.2 | 54.0 | 52.4 | 4.7 | 43.7 | 43.6 | 5.0 | 39.9 | 39.9 | 5.3 | 36.6 | 36.6 | 5.6 |
| | 63* (17.2) | 60.5 | 46.6 | 3.9 | 58.1 | 44.3 | 4.2 | 54.1 | 42.8 | 4.7 | 43.2 | 37.0 | 5.0 | 39.0 | 35.9 | 5.3 | 35.1 | 34.1 | 5.6 |
| | 67 (19.4) | 65.1 | 48.6 | 3.9 | 62.5 | 46.1 | 4.3 | 58.1 | 44.6 | 4.7 | 46.5 | 38.5 | 5.0 | 42.0 | 37.3 | 5.3 | 37.8 | 35.5 | 5.6 |
| | 72 (13.9) | 70.9 | 38.8 | 3.9 | 68.1 | 36.4 | 4.3 | 63.5 | 35.1 | 4.8 | 50.7 | 30.1 | 5.0 | 45.7 | 28.8 | 5.3 | 41.2 | 27.0 | 5.7 |

See Legend and Notes on page 18.

## 060 High Heat

| INDOOR AIR | | OUTDOOR COIL ENTERING AIR TEMPERATURE | | | | | | | | | | | | | | | | | | | | | | | |
|---|---|---|---|---|---|---|---|---|---|---|---|---|---|---|---|---|---|---|---|---|---|---|---|---|---|
| | | -10°F (-23.3°C) | | | 0°F (-17.8°C) | | | 10°F (-12.2°C) | | | 20°F (-6.7°C) | | | 30°F (-1.1°C) | | | 40°F (4.4°C) | | | 50°F (8.3°C) | | | 60°F (15.6°C) | | |
| EDB | CFM | Capacity (Mbtuh) | | Total Sys | Capacity (Mbtuh) | | Total Sys | Capacity (Mbtuh) | | Total Sys | Capacity (Mbtuh) | | Total Sys | Capacity (Mbtuh) | | Total Sys | Capacity (Mbtuh) | | Total Sys | Capacity (Mbtuh) | | Total Sys | Capacity (Mbtuh) | | Total Sys |
| | | Total | Integ | kW | Total | Integ | kW | Total | Integ | kW | Total | Integ | kW | Total | Integ | kW | Total | Integ | kW | Total | Integ | kW | Total | Integ | kW |
| 65°F (18.3°C) | 1675 | 18.0 | 16.5 | 3.3 | 20.9 | 19.2 | 3.5 | 32.3 | 29.7 | 3.8 | 36.7 | 33.2 | 4.1 | 37.4 | 32.7 | 4.3 | 47.0 | 47.0 | 4.6 | 59.8 | 59.8 | 5.5 | 62.6 | 62.6 | 5.8 |
| | 1750 | 18.2 | 16.7 | 3.1 | 21.1 | 19.4 | 3.3 | 32.6 | 30.0 | 3.6 | 37.1 | 33.6 | 3.8 | 37.8 | 33.1 | 4.0 | 47.4 | 47.4 | 4.2 | 60.4 | 60.4 | 5.1 | 63.3 | 63.3 | 5.3 |
| | 2000 | 18.4 | 17.0 | 3.2 | 21.4 | 19.7 | 3.4 | 32.9 | 30.3 | 3.6 | 37.4 | 33.8 | 3.9 | 38.0 | 33.3 | 4.0 | 47.7 | 47.7 | 4.3 | 61.0 | 61.0 | 5.1 | 63.5 | 63.5 | 5.3 |
| 70°F (21.1°C) | 1675 | 17.5 | 16.1 | 3.5 | 20.4 | 18.7 | 3.7 | 31.4 | 28.9 | 4.0 | 35.7 | 32.3 | 4.3 | 36.4 | 31.9 | 4.5 | 45.7 | 45.7 | 4.8 | 58.2 | 58.2 | 5.8 | 61.0 | 61.0 | 6.0 |
| | 1750 | 17.7 | 16.3 | 3.2 | 20.6 | 18.9 | 3.4 | 31.8 | 29.2 | 3.7 | 36.1 | 33.2 | 4.0 | 36.8 | 33.3 | 4.2 | 46.2 | 46.2 | 4.4 | 58.8 | 58.8 | 5.3 | 61.6 | 61.6 | 5.6 |
| | 2000 | 18.0 | 16.5 | 3.3 | 20.9 | 19.2 | 3.5 | 32.0 | 29.5 | 3.8 | 36.4 | 32.9 | 4.0 | 37.0 | 32.4 | 4.2 | 46.5 | 46.5 | 4.4 | 59.4 | 59.4 | 5.3 | 61.9 | 61.9 | 5.6 |
| 75°F (23.9°C) | 1675 | 17.2 | 15.8 | 3.6 | 20.0 | 18.4 | 3.9 | 30.8 | 28.3 | 4.1 | 35.0 | 31.7 | 4.4 | 36.0 | 31.6 | 4.7 | 45.3 | 45.3 | 5.0 | 57.6 | 57.6 | 6.0 | 60.4 | 60.4 | 6.3 |
| | 1750 | 17.3 | 16.0 | 3.4 | 20.2 | 18.6 | 3.6 | 31.1 | 28.6 | 3.8 | 35.4 | 32.0 | 4.1 | 36.4 | 31.9 | 4.3 | 45.7 | 45.7 | 4.6 | 58.2 | 58.2 | 5.5 | 61.0 | 61.0 | 5.8 |
| | 2000 | 17.6 | 16.2 | 3.5 | 20.4 | 18.8 | 3.7 | 31.4 | 28.9 | 3.9 | 35.7 | 32.3 | 4.2 | 36.7 | 32.1 | 4.4 | 46.0 | 46.0 | 4.6 | 58.8 | 58.8 | 5.5 | 61.3 | 61.3 | 5.8 |

See Legend and Notes on page 18.

Manufacturer reserves the right to change, at any time, specifications and designs without notice and without obligations.

# Performance Data (Continued)

## 060 Low Cool

| Evaporator Air | | Condenser Entering Air Temperatures °F (°C) | | | | | | | | | | | | | | | | | |
|---|---|---|---|---|---|---|---|---|---|---|---|---|---|---|---|---|---|---|---|
| | | 75 (23.9) | | | 85 (29.4) | | | 95 (35) | | | 105 (40.6) | | | 115 (46.1) | | | 125 (51.7) | | |
| CFM/BF | EWB | Capacity MBtuh | | Total Sys KW | Capacity MBtuh | | Total Sys KW | Capacity MBtuh | | Total Sys KW | Capacity MBtuh | | Total Sys KW | Capacity MBtuh | | Total Sys KW | Capacity MBtuh | | Total Sys KW |
| | | Total | Sens | | Total | Sens | | Total | Sens | | Total | Sens | | Total | Sens | | Total | Sens | |
| 1200/04 | 57 (13.8) | 38.8 | 38.8 | 2.2 | 36.7 | 36.7 | 2.7 | 33.3 | 33.3 | 3.1 | 25.4 | 25.4 | 3.2 | 22.5 | 22.5 | 3.5 | 20.4 | 20.4 | 3.9 |
| | 62 (16.6) | 40.3 | 37.5 | 2.2 | 37.7 | 36.0 | 2.7 | 34.3 | 34.3 | 3.1 | 26.1 | 26.1 | 3.2 | 23.2 | 23.2 | 3.5 | 21.0 | 21.0 | 3.9 |
| | 63* (17.2) | 41.1 | 30.3 | 2.2 | 38.5 | 28.8 | 2.7 | 34.6 | 26.8 | 3.1 | 26.0 | 23.9 | 3.2 | 22.9 | 22.3 | 3.5 | 20.3 | 19.1 | 3.9 |
| | 67 (19.4) | 44.2 | 31.5 | 2.2 | 41.4 | 30.0 | 2.8 | 37.2 | 27.9 | 3.2 | 28.0 | 24.9 | 3.2 | 24.6 | 23.3 | 3.5 | 21.8 | 19.9 | 3.9 |
| | 72 (22.2) | 48.2 | 25.2 | 2.2 | 45.1 | 23.7 | 2.8 | 40.6 | 21.9 | 3.2 | 30.5 | 19.4 | 3.2 | 26.8 | 17.9 | 3.6 | 23.8 | 14.9 | 4.0 |
| 1400/.04 | 57 (13.8) | 41.5 | 41.5 | 2.3 | 39.3 | 38.5 | 2.8 | 35.6 | 34.7 | 3.2 | 27.2 | 27.2 | 3.3 | 24.1 | 24.1 | 3.6 | 21.8 | 21.7 | 4.0 |
| | 62 (16.6) | 42.0 | 39.8 | 2.3 | 39.3 | 38.2 | 2.8 | 35.7 | 34.7 | 3.2 | 27.2 | 27.2 | 3.3 | 24.1 | 24.1 | 3.6 | 21.8 | 21.7 | 4.0 |
| | 63* (17.2) | 42.4 | 32.1 | 2.3 | 39.7 | 30.6 | 2.8 | 35.7 | 28.4 | 3.2 | 26.9 | 25.4 | 3.3 | 23.6 | 23.6 | 3.6 | 20.9 | 20.3 | 4.0 |
| | 67 (19.4) | 45.6 | 33.5 | 2.3 | 42.7 | 31.8 | 2.8 | 38.4 | 29.6 | 3.2 | 28.9 | 26.4 | 3.3 | 25.4 | 24.7 | 3.6 | 22.5 | 21.1 | 4.0 |
| | 72 (22.2) | 49.7 | 26.8 | 2.3 | 46.5 | 25.2 | 2.9 | 41.9 | 23.3 | 3.3 | 31.5 | 20.6 | 3.3 | 27.7 | 19.0 | 3.6 | 24.5 | 15.8 | 4.0 |
| 1550/.05 | 57 (13.8) | 42.3 | 42.3 | 2.3 | 40.0 | 40.0 | 2.8 | 36.3 | 36.3 | 3.3 | 27.7 | 27.7 | 3.3 | 24.6 | 24.6 | 3.6 | 22.2 | 22.2 | 4.0 |
| | 62 (16.6) | 42.8 | 42.3 | 2.3 | 40.0 | 40.0 | 2.8 | 36.3 | 36.3 | 3.3 | 27.7 | 27.7 | 3.3 | 24.6 | 24.6 | 3.6 | 22.2 | 22.2 | 4.0 |
| | 63* (17.2) | 43.2 | 33.8 | 2.3 | 40.5 | 32.1 | 2.8 | 36.4 | 29.8 | 3.3 | 27.4 | 26.7 | 3.3 | 24.1 | 24.1 | 3.6 | 21.3 | 21.3 | 4.0 |
| | 67 (19.4) | 46.5 | 35.2 | 2.3 | 43.5 | 33.5 | 2.9 | 39.1 | 31.1 | 3.3 | 29.4 | 27.8 | 3.3 | 25.9 | 25.9 | 3.6 | 22.9 | 22.2 | 4.0 |
| | 72 (22.2) | 50.7 | 28.2 | 2.4 | 47.4 | 26.5 | 2.9 | 42.7 | 24.5 | 3.3 | 32.1 | 21.7 | 3.4 | 28.2 | 20.0 | 3.7 | 25.0 | 16.7 | 4.1 |

See Legend and Notes on page 18

## 060 Low Heat

| Indoor Air | | Outdoor Coil Entering Air Temperatures °F (°C) | | | | | | | | | | | | | | | | | | | | |
|---|---|---|---|---|---|---|---|---|---|---|---|---|---|---|---|---|---|---|---|---|---|---|
| | | 0 (-17.8) | | | 10 (-12.2) | | | 20 (-6.7) | | | 30 (-1.1) | | | 40 (4.4) | | | 50 (10) | | | 60 (15.6) | | |
| EDB | CFM | Capacity MBtuh | | Total Sys KW | Capacity MBtuh | | Total Sys KW | Capacity MBtuh | | Total Sys KW | Capacity MBtuh | | Total Sys KW | Capacity MBtuh | | Total Sys KW | Capacity MBtuh | | Total Sys KW | Capacity MBtuh | | Total Sys KW |
| | | Total | Integ | | Total | Integ | | Total | Integ | | Total | Integ | | Total | Integ | | Total | Integ | | Total | Integ | |
| 65 (18.3) | 1200 | 13.7 | 12.6 | 2.69 | 18.8 | 17.3 | 2.80 | 23.1 | 20.9 | 2.98 | 26.6 | 23.3 | 3.01 | 33.7 | 33.7 | 3.17 | 40.7 | 40.7 | 3.44 | 46.6 | 46.6 | 3.72 |
| | 1400 | 13.9 | 12.7 | 2.46 | 19.0 | 17.5 | 2.55 | 23.4 | 21.1 | 2.70 | 26.9 | 23.6 | 2.73 | 34.0 | 34.0 | 2.86 | 41.2 | 41.2 | 3.09 | 47.1 | 47.1 | 3.32 |
| | 1550 | 14.0 | 12.9 | 2.49 | 19.2 | 17.6 | 2.58 | 23.5 | 21.3 | 2.72 | 27.1 | 23.7 | 2.75 | 34.2 | 34.2 | 2.87 | 41.6 | 41.6 | 3.09 | 47.3 | 47.3 | 3.31 |
| 70 (21.1) | 1200 | 13.3 | 12.3 | 2.82 | 18.3 | 16.8 | 2.93 | 22.5 | 20.4 | 3.11 | 25.9 | 22.7 | 3.15 | 32.8 | 32.8 | 3.31 | 39.7 | 39.7 | 3.59 | 45.4 | 45.4 | 3.89 |
| | 1400 | 13.5 | 12.4 | 2.56 | 18.5 | 17.0 | 2.66 | 22.7 | 20.9 | 2.81 | 26.2 | 23.7 | 2.84 | 33.1 | 33.1 | 2.98 | 40.1 | 40.1 | 3.21 | 45.9 | 45.9 | 3.46 |
| | 1550 | 13.7 | 12.6 | 2.59 | 18.7 | 17.2 | 2.68 | 22.9 | 20.7 | 2.83 | 26.4 | 23.1 | 2.86 | 33.3 | 33.3 | 2.99 | 40.5 | 40.5 | 3.21 | 46.0 | 46.0 | 3.44 |
| 75 (23.9) | 1200 | 13.1 | 12.0 | 2.94 | 17.9 | 16.5 | 3.05 | 22.0 | 19.9 | 3.25 | 25.7 | 22.5 | 3.29 | 32.5 | 32.5 | 3.46 | 39.3 | 39.3 | 3.75 | 44.9 | 44.9 | 4.06 |
| | 1400 | 13.2 | 12.2 | 2.67 | 18.1 | 16.7 | 2.76 | 22.3 | 20.2 | 2.92 | 25.9 | 22.7 | 2.96 | 32.8 | 32.8 | 3.10 | 39.7 | 39.7 | 3.34 | 45.4 | 45.4 | 3.60 |
| | 1550 | 13.4 | 12.3 | 2.69 | 18.3 | 16.8 | 2.78 | 22.4 | 20.3 | 2.93 | 26.1 | 22.9 | 2.96 | 33.0 | 33.0 | 3.10 | 40.1 | 40.1 | 3.33 | 45.6 | 45.6 | 3.57 |

See Legend and Notes on page 18.

Manufacturer reserves the right to change, at any time, specifications and designs without notice and without obligations.

# Performance Data (Continued)

* At 75°F (23.9°C) entering dry bulb—Tennessee Valley Authority [TVA] rating conditions; all others at 80°F (26.7°C) entering dry bulb.

**LEGEND**

BF — Bypass Factor
edb — Entering Dry-Bulb
ewb — Entering Wet-Bulb
KW — Total Unit Power Input
rh — Relative Humidity

**COOLING NOTES**:

1. Ratings are net; they account for the effects of the evaporator-fan motor power and heat.
2. Direct interpolation is permissible. Do not extrapolate.
3. The following formulas may be used:

$$t_{ldb} = t_{edb} - \frac{\text{Sensible Capacity (Btuh)}}{1.09 \times \text{CFM}}$$

$t_{lwb}$ = Wet-bulb temperature corresponding to enthalpy air leaving evaporator coil ($h_{lwb}$)

$$h_{lwb} = h_{ewb} - \frac{\text{Total Capacity (Btuh)}}{(4.5 \times \text{CFM})}$$

Where: $h_{ewb}$ = Enthalpy of air entering evaporator coil

4. The Sensible Capacity is based on 80°F (26.7°C) edb temperature of air entering evaporator coil. Below 80°F (26.7°C) edb, subtract (corr factor x CFM) from Sensible Capacity. Above 80°F (26.7°C) edb, add (corr factor x CFM) to Sensible Capacity. Correction Factor = 1.09 x (1 - BF) x (edb - 80).
5. Integrated capacity is maximum (instantaneous) capacity less the effect of frost on the outdoor coil and the heat required to defrost it.

## Multiplication Factors

| HEATER kW RATING | VOLTAGE DISTRIBUTION V/3/60 | MULTIPLICATION FACTOR |
|---|---|---|
| 240 | 200 | 0.69 |
| | 208 | 0.75 |
| | 230 | 0.92 |
| | 240 | 1.00 |

Manufacturer reserves the right to change, at any time, specifications and designs without notice and without obligations.

## Dry Coil Air Delivery* - Horizontal and Downflow Discharge Sizes 24-60 208-230VAC - 1 Phase/3 Phase

| Unit Size | Motor Speed | Tap | | ESP (in. W.C.) | | | | | | | | | |
|---|---|---|---|---|---|---|---|---|---|---|---|---|---|
| | | | | 0.1 | 0.2 | 0.3 | 0.4 | 0.5 | 0.6 | 0.7 | 0.8 | 0.9 | 1 |
| 024 | Low | Blue | CFM | 747 | 663 | 575 | 473 | 370 | 289 | 179 | NA | NA | NA |
| | | | BHP | 0.10 | 0.11 | 0.11 | 0.12 | 0.12 | 0.13 | 0.13 | NA | NA | NA |
| | Med-Low** | Pink | CFM | 864 | 790 | 716 | 637 | 552 | 468 | 366 | 295 | 203 | NA |
| | | | BHP | 0.15 | 0.14 | 0.14 | 0.15 | 0.15 | 0.16 | 0.17 | 0.17 | 0.18 | NA |
| | Medium | Red | CFM | 1063 | 994 | 929 | 866 | 803 | 741 | 673 | 610 | 528 | 453 |
| | | | BHP | 0.21 | 0.22 | 0.23 | 0.23 | 0.24 | 0.25 | 0.25 | 0.26 | 0.26 | 0.27 |
| | Med-High‡ | Orange | CFM | 1134 | 1077 | 1020 | 962 | 904 | 842 | 777 | 704 | 634 | 565 |
| | | | BHP | 0.27 | 0.27 | 0.28 | 0.29 | 0.30 | 0.30 | 0.31 | 0.32 | 0.32 | 0.33 |
| | High | Black | CFM | 1236 | 1187 | 1133 | 1079 | 1026 | 969 | 911 | 849 | 785 | 713 |
| | | | BHP | 0.33 | 0.34 | 0.35 | 0.35 | 0.36 | 0.37 | 0.38 | 0.39 | 0.39 | 0.39 |
| 036 | Low** | Blue | CFM | 1028 | 964 | 901 | 838 | 774 | 711 | 647 | 588 | 532 | 484 |
| | | | BHP | 0.12 | 0.13 | 0.14 | 0.15 | 0.15 | 0.16 | 0.17 | 0.18 | 0.19 | 0.19 |
| | Med-Low | Pink | CFM | 1164 | 1107 | 1051 | 995 | 939 | 882 | 824 | 767 | 711 | 656 |
| | | | BHP | 0.16 | 0.17 | 0.18 | 0.19 | 0.20 | 0.21 | 0.22 | 0.22 | 0.23 | 0.24 |
| | Medium | Red | CFM | 1391 | 1340 | 1294 | 1247 | 1199 | 1151 | 1104 | 1054 | 1003 | 946 |
| | | | BHP | 0.25 | 0.26 | 0.27 | 0.28 | 0.29 | 0.30 | 0.31 | 0.32 | 0.33 | 0.34 |
| | Med-High‡ | Orange | CFM | 1423 | 1377 | 1331 | 1288 | 1240 | 1192 | 1147 | 1097 | 1047 | 998 |
| | | | BHP | 0.26 | 0.27 | 0.28 | 0.29 | 0.30 | 0.32 | 0.33 | 0.34 | 0.35 | 0.36 |
| | High | Black | CFM | 1511 | 1466 | 1420 | 1378 | 1338 | 1293 | 1245 | 1200 | 1156 | 1109 |
| | | | BHP | 0.30 | 0.31 | 0.33 | 0.34 | 0.35 | 0.36 | 0.37 | 0.38 | 0.39 | 0.40 |
| 048 | Low | Blue | CFM | 945 | 885 | 820 | 757 | 696 | 638 | 579 | 527 | 480 | 429 |
| | | | BHP | 0.11 | 0.12 | 0.12 | 0.13 | 0.14 | 0.15 | 0.16 | 0.16 | 0.17 | 0.18 |
| | Med-Low** | Pink | CFM | 1297 | 1253 | 1207 | 1163 | 1115 | 1066 | 1018 | 974 | 931 | 888 |
| | | | BHP | 0.23 | 0.24 | 0.24 | 0.26 | 0.27 | 0.27 | 0.28 | 0.29 | 0.30 | 0.31 |
| | Medium‡ | Red | CFM | 1799 | 1759 | 1725 | 1676 | 1625 | 1584 | 1546 | 1509 | 1473 | 1437 |
| | | | BHP | 0.50 | 0.51 | 0.52 | 0.54 | 0.55 | 0.57 | 0.58 | 0.59 | 0.61 | 0.62 |
| | Med-High | Orange | CFM | 1936 | 1901 | 1864 | 1831 | 1798 | 1767 | 1736 | 1702 | 1670 | 1633 |
| | | | BHP | 0.63 | 0.64 | 0.65 | 0.66 | 0.68 | 0.69 | 0.70 | 0.71 | 0.73 | 0.74 |
| | High | Black | CFM | 1966 | 1933 | 1903 | 1872 | 1842 | 1811 | 1782 | 1751 | 1718 | 1619 |
| | | | BHP | 0.67 | 0.68 | 0.70 | 0.71 | 0.73 | 0.74 | 0.75 | 0.77 | 0.78 | 0.74 |
| 060 | Low | Blue | CFM | 897 | 829 | 764 | 699 | 641 | 583 | 521 | 463 | 407 | 356 |
| | | | BHP | 0.10 | 0.11 | 0.11 | 0.12 | 0.13 | 0.14 | 0.14 | 0.15 | 0.16 | 0.16 |
| | Med-Low | Pink | CFM | 1401 | 1364 | 1317 | 1271 | 1228 | 1189 | 1143 | 1097 | 1054 | 1012 |
| | | | BHP | 0.27 | 0.28 | 0.30 | 0.31 | 0.32 | 0.32 | 0.33 | 0.34 | 0.35 | 0.36 |
| | Medium** | Red | CFM | 1507 | 1472 | 1434 | 1388 | 1346 | 1307 | 1270 | 1227 | 1183 | 1142 |
| | | | BHP | 0.32 | 0.34 | 0.35 | 0.36 | 0.37 | 0.38 | 0.39 | 0.40 | 0.41 | 0.42 |
| | Med-High‡ | Orange | CFM | 1943 | 1905 | 1867 | 1818 | 1787 | 1743 | 1705 | 1664 | 1624 | 1587 |
| | | | BHP | 0.63 | 0.64 | 0.66 | 0.67 | 0.68 | 0.69 | 0.70 | 0.71 | 0.73 | 0.74 |
| | High | Black | CFM | 1969 | 1939 | 1909 | 1881 | 1852 | 1817 | 1781 | 1748 | 1710 | 1613 |
| | | | BHP | 0.66 | 0.67 | 0.69 | 0.71 | 0.72 | 0.74 | 0.75 | 0.76 | 0.77 | 0.73 |

Shaded areas indicate speed/static combinations that are permitted for dehumidification speed.

* - Air delivery values are without air filter and are for dry coil (See Wet Coil Pressure Drop Table).

** - Factory Supplied Low Stage Cooling

‡ - Factory Supplied High Stage Cooling

NOTE: Deduct field-supplied air filter pressure drop and wet coil pressure drop to obtain static pressure available for ducting.

Manufacturer reserves the right to change, at any time, specifications and designs without notice and without obligations.

## Dry Coil Air Delivery* - Horizontal and Downflow Discharge Sizes 36-60 460 VAC - 3 Phase

| Unit Size | Motor Speed | Tap | | ESP (in. W.C.) | | | | | | | | | |
|---|---|---|---|---|---|---|---|---|---|---|---|---|---|
| | | | | 0.1 | 0.2 | 0.3 | 0.4 | 0.5 | 0.6 | 0.7 | 0.8 | 0.9 | 1 |
| 36 | Low† | Blue | CFM | 1064 | 965 | 899 | 837 | 772 | 714 | 662 | 605 | 570 | 516 |
| | | | BHP | 0.26 | 0.26 | 0.27 | 0.29 | 0.31 | 0.32 | 0.34 | 0.36 | 0.38 | 0.39 |
| | Med-Low | Pink | CFM | 1182 | 1124 | 1067 | 1007 | 954 | 898 | 847 | 797 | 749 | 699 |
| | | | BHP | 0.33 | 0.35 | 0.36 | 0.38 | 0.41 | 0.43 | 0.44 | 0.47 | 0.48 | 0.50 |
| | Medium | Red | CFM | 1414 | 1360 | 1311 | 1262 | 1212 | 1162 | 1114 | 1070 | 1024 | 980 |
| | | | BHP | 0.51 | 0.53 | 0.55 | 0.57 | 0.59 | 0.62 | 0.64 | 0.66 | 0.69 | 0.71 |
| | Med-High** | Orange | CFM | 1448 | 1395 | 1348 | 1295 | 1247 | 1199 | 1150 | 1111 | 1061 | 1019 |
| | | | BHP | 0.53 | 0.56 | 0.58 | 0.60 | 0.62 | 0.64 | 0.67 | 0.69 | 0.72 | 0.74 |
| | High | Black | CFM | 1534 | 1483 | 1434 | 1389 | 1340 | 1297 | 1253 | 1208 | 1166 | 1119 |
| | | | BHP | 0.62 | 0.64 | 0.67 | 0.69 | 0.71 | 0.73 | 0.76 | 0.79 | 0.81 | 0.83 |
| 48 | Low† | Blue | CFM | 1312 | 1264 | 1214 | 1165 | 1117 | 1070 | 1020 | 959 | 905 | 860 |
| | | | BHP | 0.41 | 0.43 | 0.45 | 0.47 | 0.48 | 0.50 | 0.51 | 0.54 | 0.55 | 0.57 |
| | Med-Low | Pink | CFM | 1416 | 1373 | 1324 | 1275 | 1230 | 1185 | 1138 | 1094 | 1037 | 988 |
| | | | BHP | 0.49 | 0.51 | 0.53 | 0.55 | 0.57 | 0.58 | 0.60 | 0.62 | 0.64 | 0.67 |
| | Medium** | Red | CFM | 1781 | 1748 | 1710 | 1675 | 1634 | 1597 | 1560 | 1523 | 1488 | 1455 |
| | | | BHP | 0.91 | 0.93 | 0.95 | 0.97 | 1.00 | 1.02 | 1.05 | 1.07 | 1.09 | 1.11 |
| | Med-High | Orange | CFM | 1852 | 1817 | 1784 | 1746 | 1709 | 1672 | 1636 | 1600 | 1564 | 1529 |
| | | | BHP | 1.02 | 1.04 | 1.00 | 1.09 | 1.11 | 1.14 | 1.16 | 1.19 | 1.20 | 1.22 |
| | High | Black | CFM | 1955 | 1920 | 1887 | 1852 | 1814 | 1785 | 1748 | 1710 | 1673 | 1640 |
| | | | BHP | 1.14 | 1.16 | 1.19 | 1.22 | 1.25 | 1.26 | 1.30 | 1.32 | 1.35 | 1.37 |
| 60 | Low | Blue | CFM | 1266 | 1205 | 1150 | 1097 | 1030 | 973 | 924 | 873 | 817 | 764 |
| | | | BHP | 0.42 | 0.43 | 0.45 | 0.47 | 0.48 | 0.51 | 0.52 | 0.54 | 0.56 | 0.58 |
| | Med-Low† | Pink | CFM | 1487 | 1436 | 1393 | 1340 | 1289 | 1238 | 1187 | 1140 | 1091 | 1045 |
| | | | BHP | 0.61 | 0.63 | 0.66 | 0.67 | 0.70 | 0.71 | 0.73 | 0.75 | 0.77 | 0.79 |
| | Medium | Red | CFM | 1844 | 1801 | 1759 | 1720 | 1684 | 1642 | 1603 | 1559 | 1511 | 1469 |
| | | | BHP | 1.07 | 1.09 | 1.12 | 1.14 | 1.15 | 1.20 | 1.22 | 1.23 | 1.26 | 1.28 |
| | Med-High** | Orange | CFM | 1945 | 1905 | 1869 | 1823 | 1788 | 1750 | 1711 | 1673 | 1635 | 1591 |
| | | | BHP | 1.24 | 1.25 | 1.28 | 1.31 | 1.34 | 1.36 | 1.39 | 1.41 | 1.44 | 1.46 |
| | High | Black | CFM | 2020 | 1983 | 1941 | 1906 | 1868 | 1833 | 1795 | 1753 | 1716 | 1661 |
| | | | BHP | 1.38 | 1.39 | 1.42 | 1.45 | 1.47 | 1.50 | 1.53 | 1.56 | 1.58 | 1.59 |

Notes:
* - Air delivery values are without air filter and are for dry coil (See Wet Coil Pressure Drop Table).
† Factory Shipped Low Stage Cooling Speed
** Factory Shipped High Stage Cooling Speed
NOTE: Deduct field-supplied air filter pressure drop and wet coil pressure drop to obtain static pressure available for ducting.

## Wet Coil Pressure Drop (IN. W.C.)

| Unit Size | Standard CFM (SCFM) | | | | | | | | | | | | | | | | |
|---|---|---|---|---|---|---|---|---|---|---|---|---|---|---|---|---|---|
| | 500 | 600 | 700 | 800 | 900 | 1000 | 1100 | 1200 | 1300 | 1400 | 1500 | 1600 | 1700 | 1800 | 1900 | 2000 | 2100 |
| 24 | 0.02 | 0.03 | 0.04 | 0.04 | 0.05 | 0.06 | | | | | | | | | | | |
| 36 | | | | 0.03 | 0.04 | 0.05 | 0.05 | 0.06 | 0.07 | 0.08 | 0.08 | 0.09 | 0.10 | 0.11 | | | |
| 48 | | | | | | 0.03 | 0.04 | 0.04 | 0.05 | 0.06 | 0.06 | 0.07 | 0.08 | 0.09 | 0.10 | 0.11 | 0.12 |
| 60 | | | | | | 0.03 | 0.04 | 0.04 | 0.05 | 0.06 | 0.06 | 0.07 | 0.08 | 0.09 | 0.10 | 0.11 | 0.12 |

Manufacturer reserves the right to change, at any time, specifications and designs without notice and without obligations.

## Economizer with 1-in. Filter Pressure Drop (IN. W.C.)

| Filter Size in. (mm) | Cooling Tons | Standard CFM (SCFM) | | | | | | | | | | | | | | | | |
|---|---|---|---|---|---|---|---|---|---|---|---|---|---|---|---|---|---|---|
| | | 500 | 600 | 700 | 800 | 900 | 1000 | 1100 | 1200 | 1300 | 1400 | 1500 | 1600 | 1700 | 1800 | 1900 | 2000 | 2100 |
| 600-1400 CFM 12x20x1+12x20x1 (305x508x25+305x508x25) | 2.0 | 0.04 | 0.05 | 0.07 | 0.09 | 0.14 | 0.16 | 0.18 | 0.25 | - | - | - | - | - | - | - | - | - |
| 1200-1800 CFM 16x24x1+14x24x1 (406x610x25+356x610x25) | 3.0 | - | - | - | 0.04 | 0.06 | 0.07 | 0.08 | 0.10 | 0.11 | 0.12 | 0.13 | 0.14 | 0.16 | 0.16 | - | - | - |
| 1500-2200 CFM 16x24x1+18x24x1 (406x610x25+457x610x25) | 4.0 | - | - | - | - | - | - | 0.08 | 0.10 | 0.11 | 0.13 | 0.15 | 0.17 | 0.18 | 0.20 | 0.21 | 0.22 | - |
| 1500-2200 CFM 16x24x1+18x24x1 (406x610x25+457x610x25) | 5.0 | - | - | - | - | - | - | 0.08 | 0.10 | 0.11 | 0.13 | 0.15 | 0.17 | 0.18 | 0.20 | 0.21 | 0.22 | 0.23 |

## Filter Pressure Drop Table (IN. W.C.)

| Filter Size in. (mm) | Cooling Tons | Standard CFM (SCFM) | | | | | | | | | | | | | | | | |
|---|---|---|---|---|---|---|---|---|---|---|---|---|---|---|---|---|---|---|
| | | 500 | 600 | 700 | 800 | 900 | 1000 | 1100 | 1200 | 1300 | 1400 | 1500 | 1600 | 1700 | 1800 | 1900 | 2000 | 2100 |
| 600-1400 CFM 12x20x1+12x20x1 (305x508x25+305x508x25) | 2.0 | 0.02 | 0.03 | 0.05 | 0.06 | 0.08 | 0.10 | 0.11 | 0.13 | - | - | - | - | - | - | - | - | - |
| 1200-1800 CFM 16x24x1+14x24x1 (406x610x25+356x610x25) | 3.0 | - | - | - | 0.03 | 0.03 | 0.04 | 0.05 | 0.06 | 0.07 | 0.08 | 0.09 | 0.09 | 0.10 | 0.11 | - | - | - |
| 1500-2200 CFM 16x24x1+18x24x1 (406x610x25+457x610x25) | 4.0 | - | - | - | - | - | - | 0.02 | 0.03 | 0.03 | 0.04 | 0.04 | 0.06 | 0.08 | 0.10 | 0.11 | 0.13 | - |
| 1500-2200 CFM 16x24x1+18x24x1 (406x610x25+457x610x25) | 5.0 | - | - | - | - | - | - | 0.02 | 0.03 | 0.03 | 0.04 | 0.04 | 0.06 | 0.08 | 0.10 | 0.11 | 0.13 | 0.14 |

Manufacturer reserves the right to change, at any time, specifications and designs without notice and without obligations.

## Typical Piping and Wiring

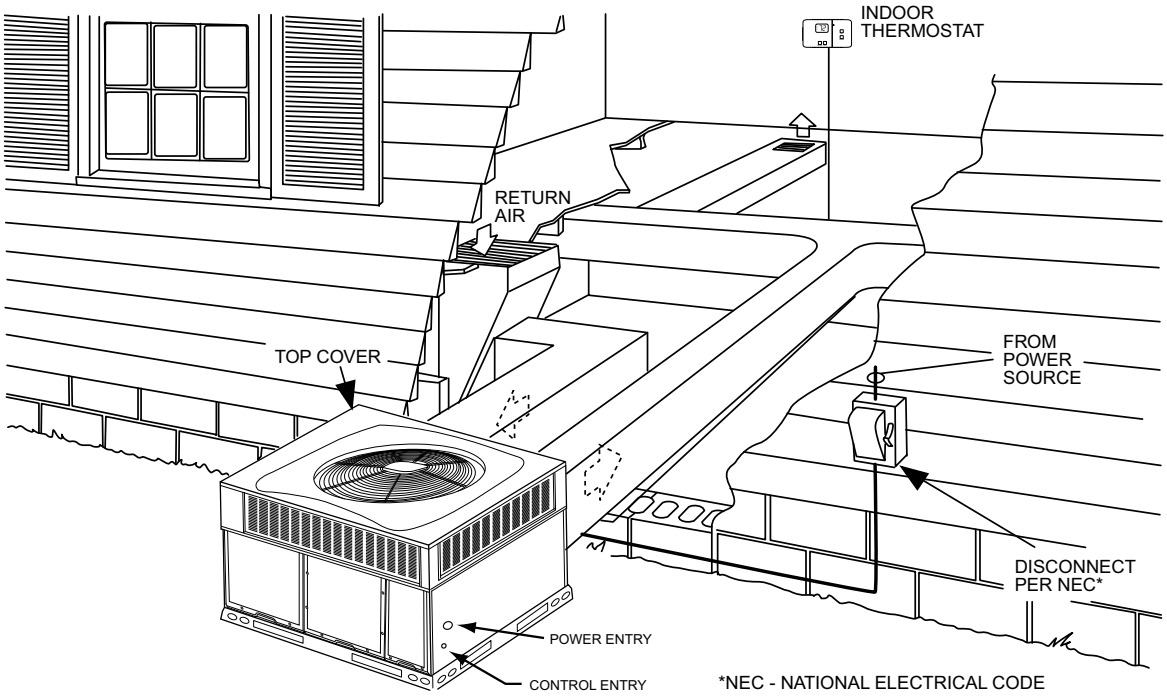


## Application Data

**Condensate trap** — A 2-in. (50.8 mm) condensate trap must be field supplied.

**Ductwork** — Secure downflow discharge ductwork to roof curb. For horizontal discharge applications, attach ductwork to unit with flanges.

**To convert a unit to downflow discharge** — Units are equipped with factory-installed inserts in the downflow openings. Removal of the inserts is similar to removing an electrical knock-out.

**Maximum cooling airflow** — To minimize the possibility of condensate blow-off from the evaporator, airflow through the units should not exceed 450 cfm per ton.

**Minimum cooling airflow** — Minimum cooling airflow is 350 cfm per ton.

**Minimum ambient cooling operation temperature** — All standard units have a minimum ambient operating temperature of 40°F (4°C). With accessory low ambient temperature kit, units can operate at temperatures down to 0°F (-17°C).

# Electrical Data

| MODEL | NOMINAL V-PH-HZ | VOLTAGE RANGE | | COMPRESSOR | | OFM | IFM | NOMINAL ELECTRIC HEAT | POWER SUPPLY | | |
|---|---|---|---|---|---|---|---|---|---|---|---|
| | | MIN | MAX | RLA | LRA | FLA | FLA | kW | FLA | MCA | MOCP |
| 24 | 208/230-1-60 | 197 | 253 | 10.3 | 62 | 0.56 | 3.9 | -/- | -/- | 17.4 | 25 |
| | | | | | | | | 3.8/5 | 18.1/20.8 | 40/43.3 | 40/45 |
| | | | | | | | | 5.4/7.2 | 25.9/30 | 49.7/54.8 | 50/60 |
| | | | | | | | | 7.5/10 | 36.1/41.7 | 62.5/69.5 | 70/70 |
| 36 | 208/230-1-60 | 197 | 253 | 14.6 | 90 | 1.05 | 5.8 | -/- | -/- | 25.2 | 35 |
| | | | | | | | | 3.8/5 | 18.1/20.8 | 47.7/51.1 | 50/60 |
| | | | | | | | | 5.4/7.2 | 25.9/30 | 57.5/62.6 | 60/70 |
| | | | | | | | | 7.5/10 | 36.1/41.7 | 70.2/77.2 | 80/80 |
| | | | | | | | | 11.3/15 | 54.2/62.5 | 92.9/103.2 | 100/110 |
| | 208/230-3-60 | 197 | 253 | 9.9 | 82 | 1.05 | 5.8 | -/- | -/- | 19.3 | 25 |
| | | | | | | | | 3.8/5 | 10.4/12 | 32.2/34.2 | 35/35 |
| | | | | | | | | 5.4/7.2 | 20.8/24.1 | 45.2/49.4 | 50/50 |
| | | | | | | | | 11.3/15 | 31.2/36.1 | 58.2/64.4 | 60/70 |
| 36 | 460-3-60 | 414 | 506 | 4.8 | 44.3 | 0.53 | 1.7 | - | - | 8.2 | 15 |
| | | | | | | | | 10 | 12 | 23.2 | 25 |
| | | | | | | | | 15 | 18 | 30.7 | 35 |
| 48 | 208/230-1-60 | 197 | 253 | 23 | 138 | 1.05 | 6.9 | -/- | -/- | 36.8 | 60 |
| | | | | | | | | 3.8/5 | 18.1/20.8 | 59.3/62.7 | 60/70 |
| | | | | | | | | 5.4/7.2 | 25.9/30 | 69.1/74.2 | 70/80 |
| | | | | | | | | 7.5/10 | 36.1/41.7 | 81.8/88.8 | 90/90 |
| | | | | | | | | 11.3/15 | 54.2/62.5 | 104.5/114.8 | 110/125 |
| | | | | | | | | 15/20 | 72.2/83.3 | 127/140.8 | 150/150 |
| | 208/230-3-60 | 197 | 253 | 11.9 | 112 | 1.05 | 6.9 | -/- | -/- | 22.9 | 30 |
| | | | | | | | | 3.8/5 | 10.4/12 | 35.8/37.8 | 40/40 |
| | | | | | | | | 5.4/7.2 | 20.8/24.1 | 48.8/53 | 50/60 |
| | | | | | | | | 11.3/15 | 31.2/36.1 | 61.8/68 | 70/70 |
| | | | | | | | | 15/20 | 41.4/47.9 | 74.6/82.7 | 80/90 |
| 48 | 460-3-60 | 414 | 506 | 6.8 | 61.8 | 0.53 | 2.3 | - | - | 11.3 | 15 |
| | | | | | | | | 10 | 12 | 26.3 | 30 |
| | | | | | | | | 15 | 18 | 33.3 | 35 |
| | | | | | | | | 20 | 24.1 | 41.5 | 45 |
| 60 | 208/230-1-60 | 197 | 253 | 29.4 | 149 | 1.05 | 6.9 | -/- | -/- | 44.8 | 60 |
| | | | | | | | | 3.8/5 | 18.1/20.8 | 67.3/70.7 | 70/80 |
| | | | | | | | | 5.4/7.2 | 25.9/30 | 77.1/82.2 | 80/90 |
| | | | | | | | | 7.5/10 | 36.1/41.7 | 89.8/96.8 | 90/100 |
| | | | | | | | | 11.3/15 | 54.2/62.5 | 112.5/122.8 | 125/125 |
| | | | | | | | | 15/20 | 72.2/83.3 | 135/148.8 | 150/150 |
| | 208/230-3-60 | 197 | 253 | 14 | 150 | 1.05 | 6.9 | -/- | -/- | 25.5 | 35 |
| | | | | | | | | 3.8/5 | 10.4/12 | 38.5/40.5 | 40/45 |
| | | | | | | | | 5.4/7.2 | 20.8/24.1 | 51.5/55.6 | 60/60 |
| | | | | | | | | 11.3/15 | 31.2/36.1 | 64.5/70.6 | 70/80 |
| | | | | | | | | 15/20 | 41.4/47.9 | 77.2/85.3 | 80/90 |
| 60 | 460-3-60 | 414 | 506 | 6.3 | 58 | 0.53 | 2.3 | - | - | 10.7 | 15 |
| | | | | | | | | 10 | 12 | 25.7 | 30 |
| | | | | | | | | 15 | 18 | 33.2 | 35 |
| | | | | | | | | 20 | 24.1 | 40.8 | 45 |

**Manufacturer reserves the right to change, at any time, specifications and designs without notice and without obligations.**

LEGEND

FLA - Full Load Amps
IDM - Inducer Motor
IFM - Indoor Fan Motor
LRA -Locked Rotor Amps
MCA - Minimum Circuit Amps
MOCP - Maximum Over Current Protection
OFM - Outdoor Fan Motor
RLA - Rated Load Amps

NOTES:

1. In compliance with NEC (National Electrical Code) requirements for multimotor and combination load equipment (refer to NEC Articles 430 and 440), the overcurrent protective device for the unit shall be Power Supply fuse or circuit breaker.
2. Minimum wire size is based on 60 C copper wire. If other than 60 C wire is used, or if length exceeds wire length in table, determine size from NEC.
3. Unbalanced 3-Phase Supply Voltage
   *Never operate a motor where a phase imbalance in supply voltage is greater than 2%.* Use the following formula to determine the percentage of voltage imbalance

   % Voltage imbalance

   $$= 100 \times \frac{\text{max voltage deviation from average voltage}}{\text{average voltage}}$$

EXAMPLE: Supply voltage is 230-3-60.

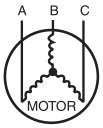


AB = 228 v
BC = 231 v
AC = 227 v

$$\text{Average Voltage} = \frac{228 + 231 + 227}{3} = \frac{686}{3} = 229$$

Determine maximum deviation from average voltage.
(AB) 229 - 228 = 1 v
(BC) 231 - 229 = 2 v
(AC) 229 - 227 = 2 v

Maximum deviation is 2 v.

Determine percent of voltage imbalance

$$\text{\% Voltage Imbalance} = 100 \times \frac{2}{229} = 0.8\%$$

This amount of phase imbalance is satisfactory as it is below the maximum allowable 2%.

IMPORTANT: If the supply voltage phase imbalance is more than 2%, contact your local electric utility company immediately.

A06564

## Connection Wiring Diagram 208/230-1-60

### CONNECTION WIRING DIAGRAM
### DANGER: ELECTRICAL SHOCK HAZARD DISCONNECT POWER BEFORE SERVICING

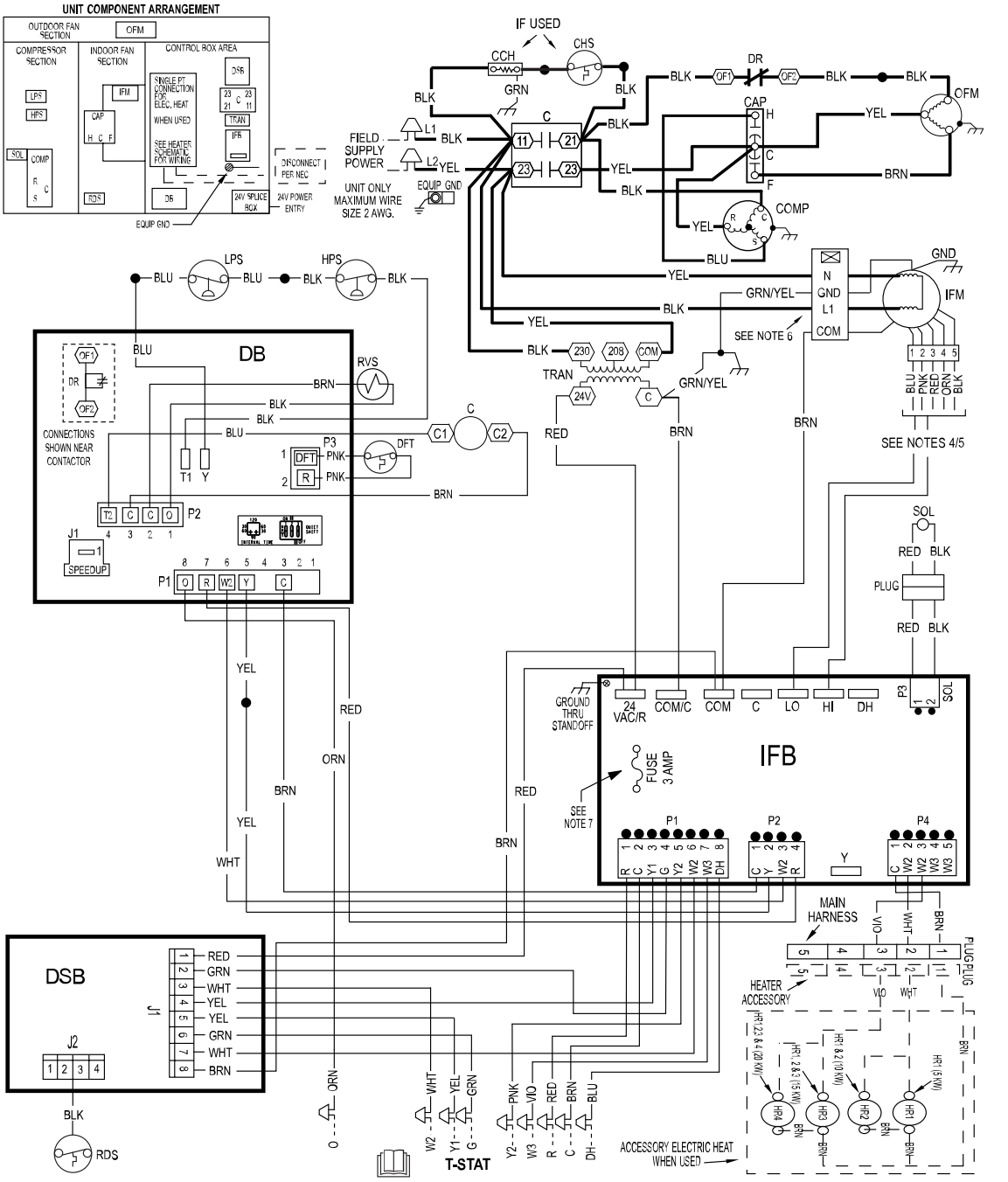


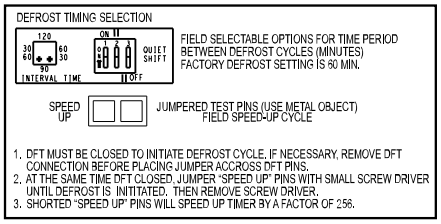


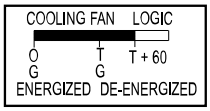


## NOTES:

1. IF ANY OF THE ORIGINAL WIRES FURNISHED ARE REPLACED IT MUST BE REPLACED WITH THE SAME OR ITS EQUIVALENT.
2. SEE PRE SALE LITERATURE FOR THERMOSTATS.
3. USE 75 DEGREES C COPPER CONDUCTORS FOR FIELD INSTALLATION.
4. REFER TO INSTALLATION INSTRUCTIONS FOR CORRECT SPEED SELECTION FOR IFM.
5. RELOCATION OF SPEED TAPS MAY BE REQUIRED WHEN USING FIELD INSTALLED ELECTRIC HEATERS. CONSULT INSTALLATION INSTRUCTIONS TO DETERMINE CORRECT SPEED TAP SETTING.
6. "DO NOT DISCONNECT PLUG UNDER LOAD".
7. THIS FUSE IS MANUFACTURED BY LITTLE FUSE, P/N 287003.
8. N.E.C. CLASS 2, 24V.
9. CCH NOT USED ON ALL UNITS.

A250103

## Ladder Wiring Diagram 208/230-1-60

### LADDER WIRING DIAGRAM
### DANGER: ELECTRICAL SHOCK HAZARD DISCONNECT POWER BEFORE SERVICING

### LEGEND

| | | | | | | | |
|---|---|---|---|---|---|---|---|
| **DB** | DEFROST BOARD | **DSB** | DISSIPATION BOARD | **IFB** | INDOOR FAN BOARD | **RDS** | REFRIG. DETECTION SENSOR |
| **DH** | DEHUM | **GND** | GROUND | **IFM** | INDOOR FAN MOTOR | **RVS** | REVERSING VALVE |
| **DFT** | DEFROST TEMPERATURE SWITCH | **HPS** | HIGH PRESSURE SWITCH | **LPS** | LOW PRESSURE SWITCH | **SOL** | COMPRESSOR SOLENOID |
| **DR** | DEFROST RELAY (SEE DB) | **HR** | HEATER RELAY | **OFM** | OUTDOOR FAN MOTOR | **TRAN** | TRANSFORMER |
| △ | FIELD SPLICE | ⬭ | SPLICE (MARKED) | - - - | ACCESSORY OR OPTIONAL WIRING | **T-STAT** | THERMOSTAT |
| ⊃ | TERMINAL (MARKED) | —— | FACTORY LOW VOLTAGE | —— | FACTORY HI VOLTAGE | **CCH** | CRANKCASE HEATER |
| ○ | TERMINAL (UNMARKED) | — — | FIELD CONTROL WIRING | **C** | CONTACTOR | **CHS** | CRANKCASE HEATER SWITCH |
| ● | SPLICE | —— - | FIELD POWER WIRING | **CAP** | CAPACITOR | **COMP** | COMPRESSOR MOTOR |
| | | | | | | **CTD** | COMPRESSOR TIME DELAY |

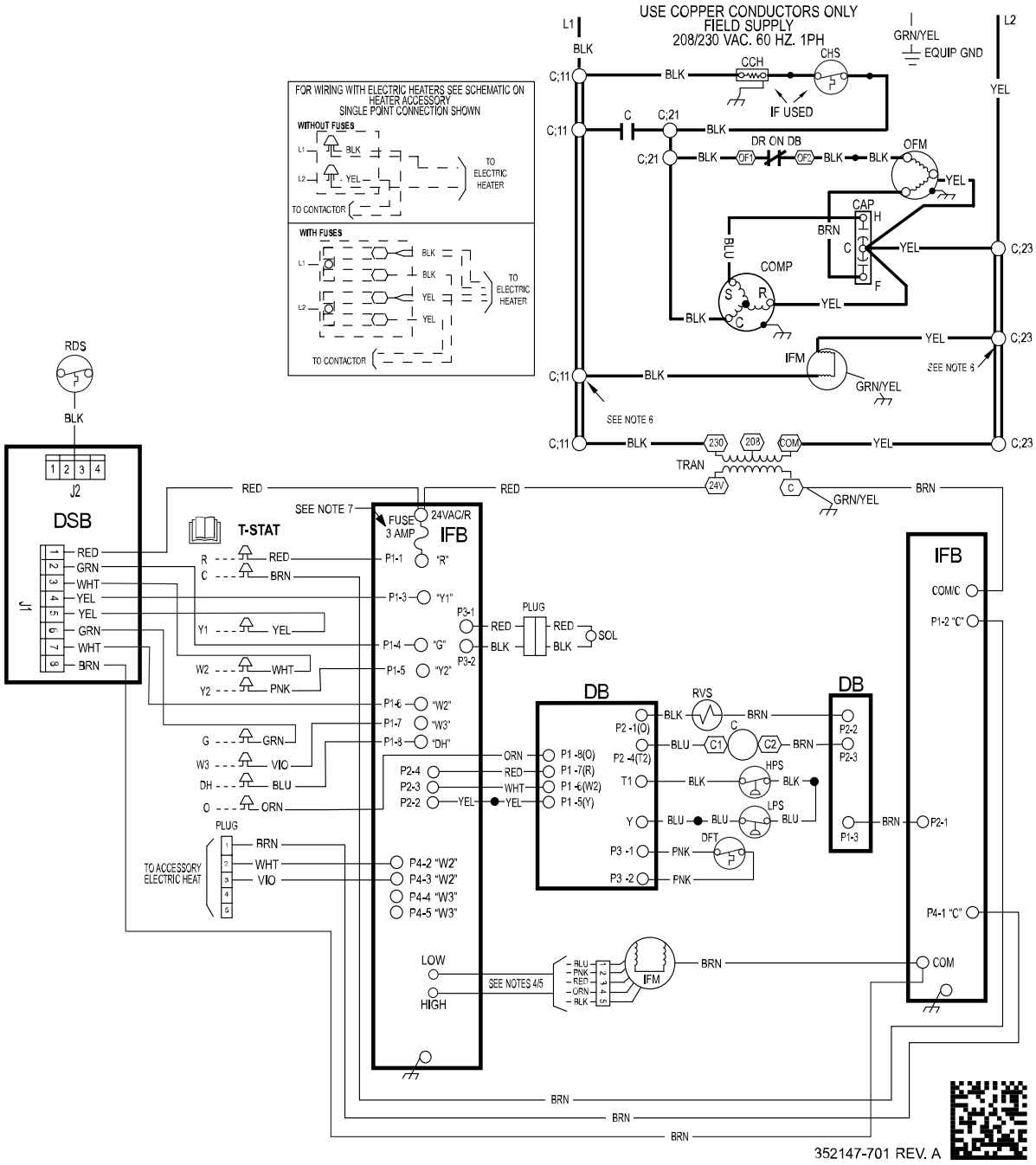

# Connection Wiring Diagram 208/230-3-60

## CONNECTION WIRING DIAGRAM
## DANGER: ELECTRICAL SHOCK HAZARD DISCONNECT POWER BEFORE SERVICING

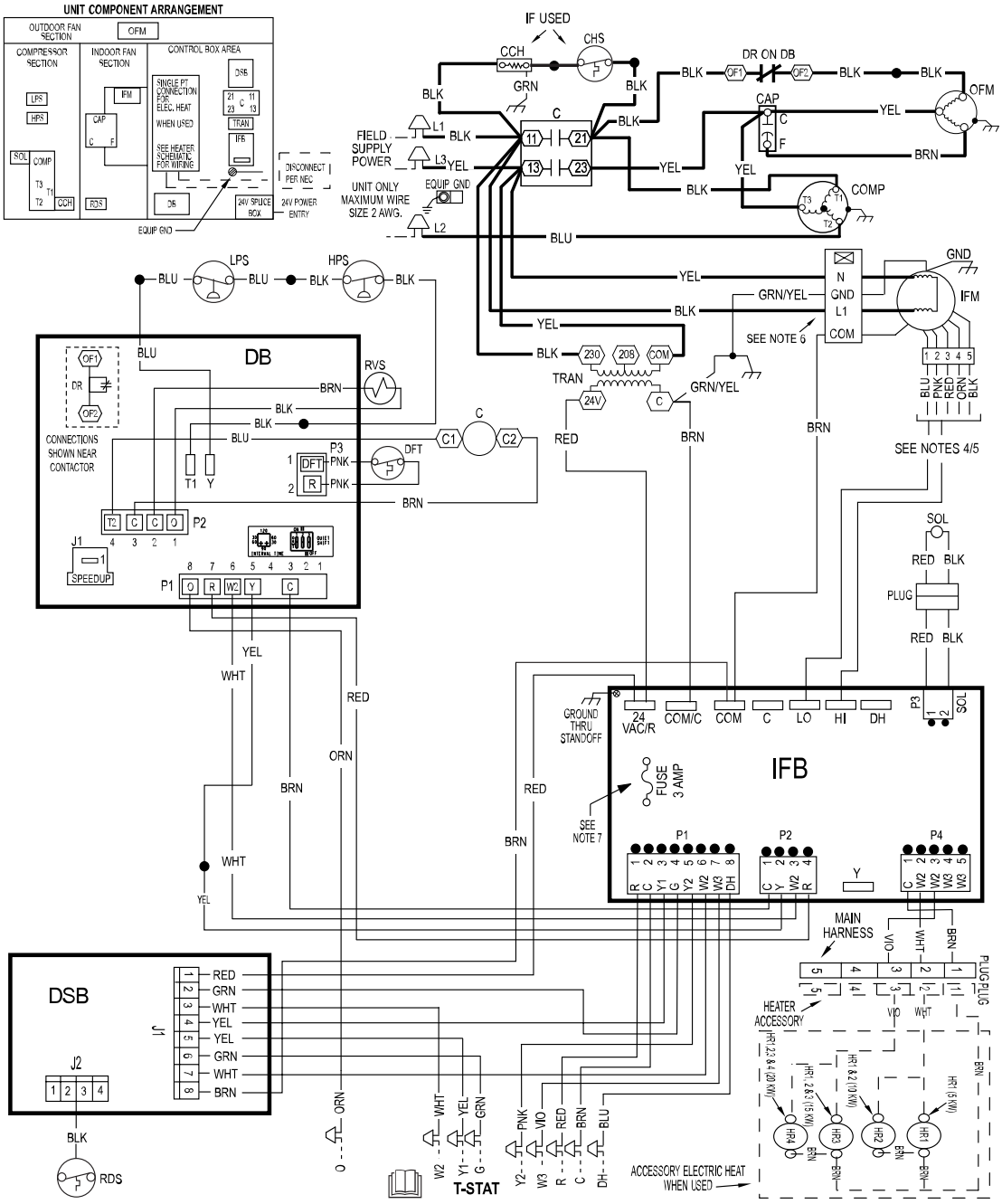


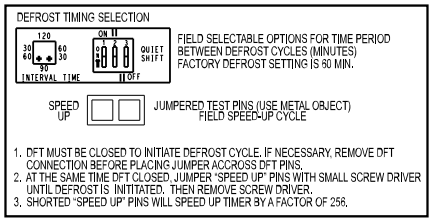


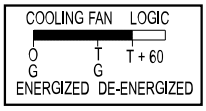


## NOTES:

1. IF ANY OF THE ORIGINAL WIRES FURNISHED ARE REPLACED IT MUST BE REPLACED WITH THE SAME OR ITS EQUIVALENT.
2. SEE PRE SALE LITERATURE FOR THERMOSTATS.
3. USE 75 DEGREES C COPPER CONDUCTORS FOR FIELD INSTALLATION.
4. REFER TO INSTALLATION INSTRUCTIONS FOR CORRECT SPEED SELECTION FOR IFM.
5. RELOCATION OF SPEED TAPS MAY BE REQUIRED WHEN USING FIELD INSTALLED ELECTRIC HEATERS. CONSULT INSTALLATION INSTRUCTIONS TO DETERMINE CORRECT SPEED TAP SETTING.
6. "DO NOT DISCONNECT PLUG UNDER LOAD".
7. THIS FUSE IS MANUFACTURED BY LITTLE FUSE, P/N 287003.
8. N.E.C. CLASS 2, 24V.
9. CCH NOT USED ON ALL UNITS.

A250105

# Ladder Wiring Diagram 208/230-3-60

## LADDER WIRING DIAGRAM
## DANGER: ELECTRICAL SHOCK HAZARD DISCONNECT POWER BEFORE SERVICING

### LEGEND

| | | | | | | | |
|---|---|---|---|---|---|---|---|
| DB | DEFROST BOARD | DSB | DISSIPATION BOARD | IFB | INDOOR FAN BOARD | RDS | REFRIG. DETECTION SENSOR |
| DH | DEHUM | GND | GROUND | IFM | INDOOR FAN MOTOR | RVS | REVERSING VALVE |
| DFT | DEFROST TEMPERATURE SWITCH | HPS | HIGH PRESSURE SWITCH | LPS | LOW PRESSURE SWITCH | SOL | COMPRESSOR SOLENOID |
| DR | DEFROST RELAY (SEE DB) | HR | HEATER RELAY | OFM | OUTDOOR FAN MOTOR | TRAN | TRANSFORMER |
| | | | | | | T-STAT | THERMOSTAT |
| △ | FIELD SPLICE | ⬡ | SPLICE (MARKED) | - - - | ACCESSORY OR OPTIONAL WIRING | CCH | CRANKCASE HEATER |
| ⬭ | TERMINAL (MARKED) | —— | FACTORY LOW VOLTAGE | —— | FACTORY HI VOLTAGE | CHS | CRANKCASE HEATER SWITCH |
| ○ | TERMINAL (UNMARKED) | — — | FIELD CONTROL WIRING | C | CONTACTOR | COMP | COMPRESSOR MOTOR |
| ● | SPLICE | —— - | FIELD POWER WIRING | CAP | CAPACITOR | CTD | COMPRESSOR TIME DELAY |

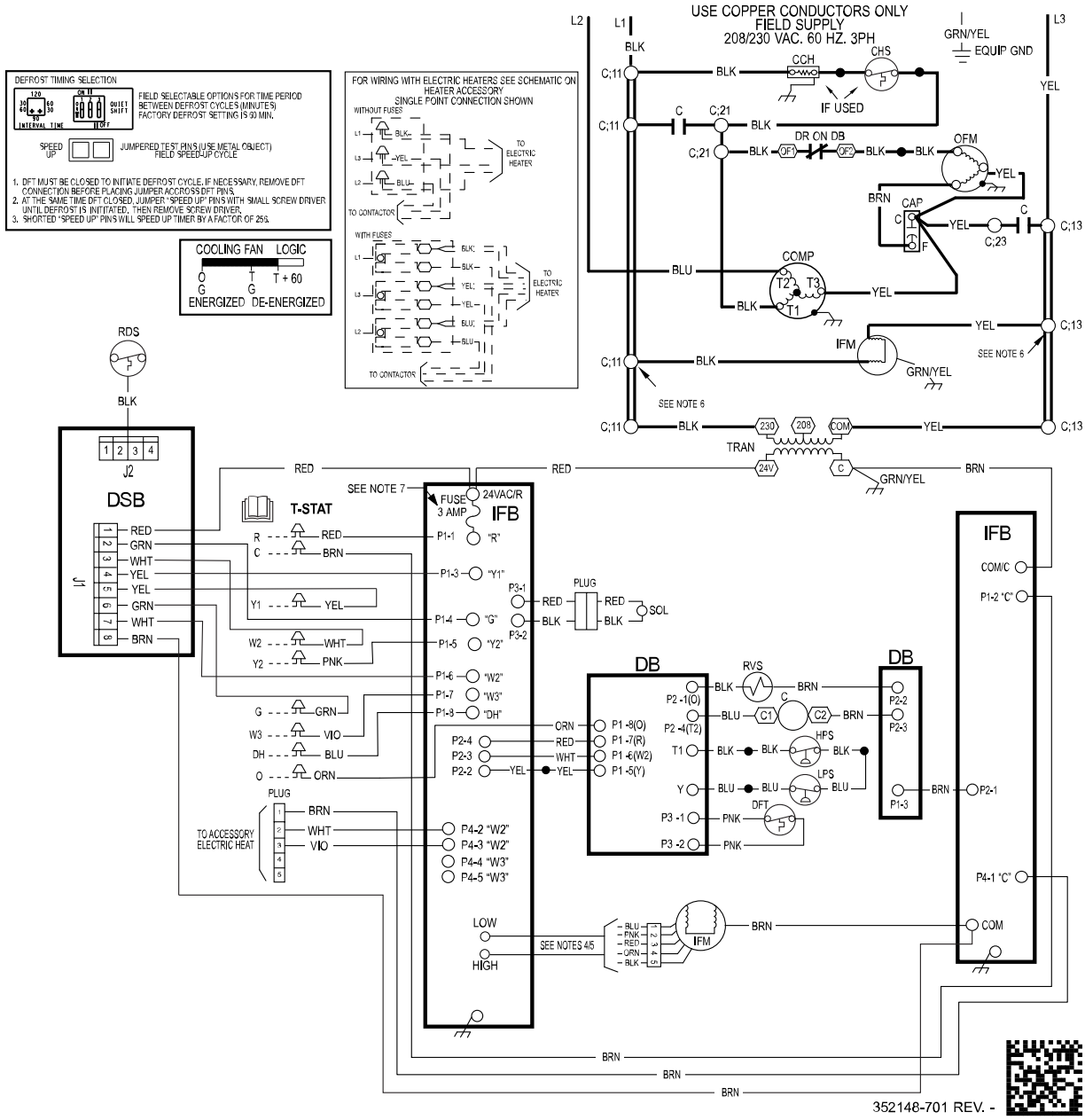

# Connection Wiring Diagram 460-3-60

## CONNECTION WIRING DIAGRAM
## DANGER: ELECTRICAL SHOCK HAZARD DISCONNECT POWER BEFORE SERVICING

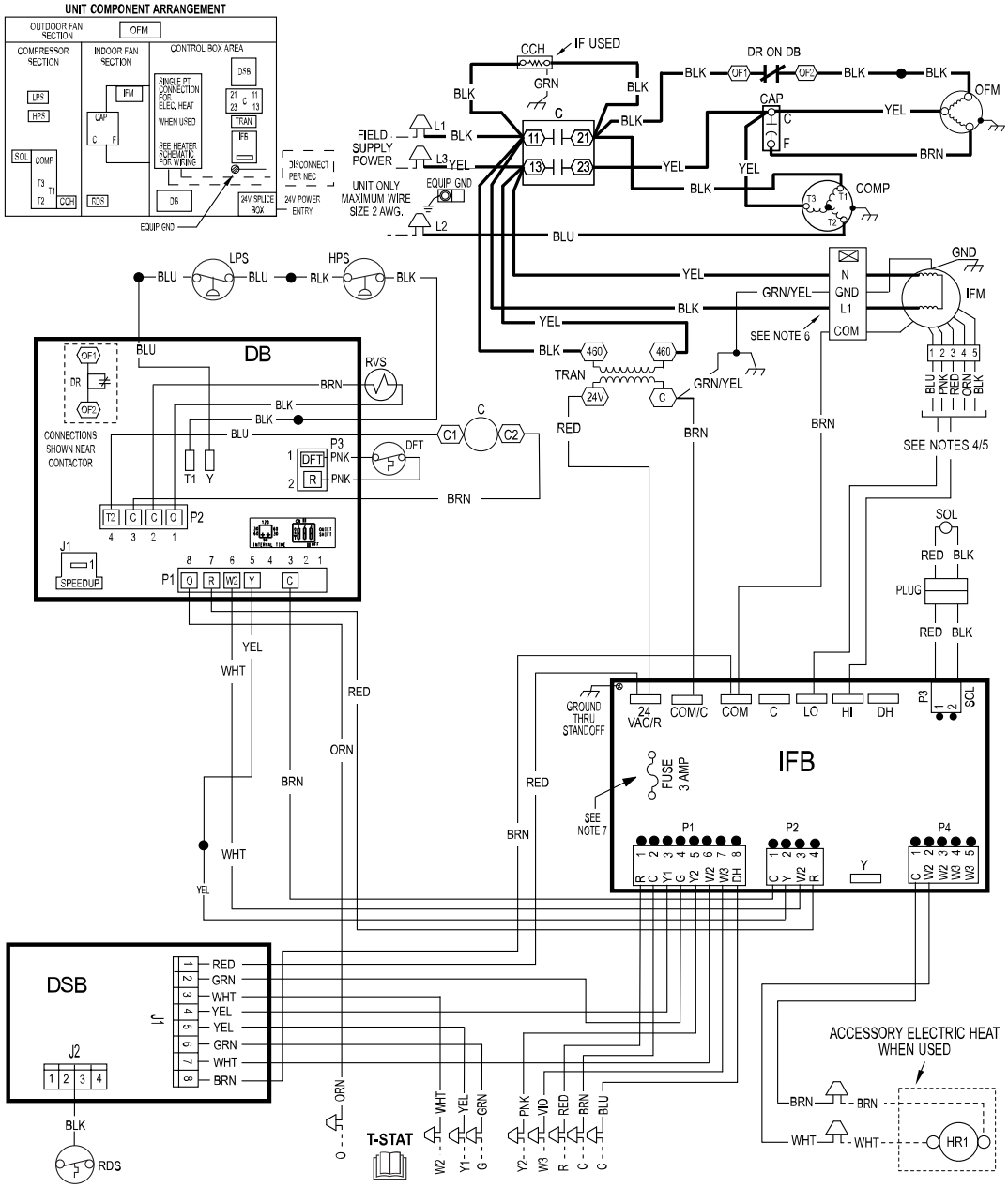


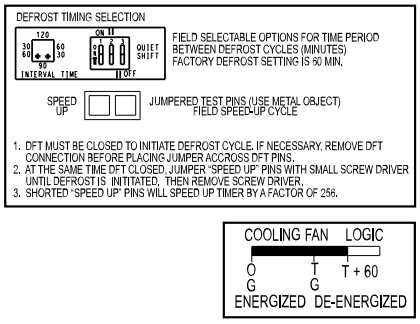





## NOTES:

1. IF ANY OF THE ORIGINAL WIRES FURNISHED ARE REPLACED IT MUST BE REPLACED WITH THE SAME OR ITS EQUIVALENT.
2. SEE PRE SALE LITERATURE FOR THERMOSTATS.
3. USE 75 DEGREES C COPPER CONDUCTORS FOR FIELD INSTALLATION.
4. REFER TO INSTALLATION INSTRUCTIONS FOR CORRECT SPEED SELECTION FOR IFM.
5. RELOCATION OF SPEED TAPS MAY BE REQUIRED WHEN USING FIELD INSTALLED ELECTRIC HEATERS. CONSULT INSTALLATION INSTRUCTIONS TO DETERMINE CORRECT SPEED TAP SETTING.
6. "DO NOT DISCONNECT PLUG UNDER LOAD".
7. THIS FUSE IS MANUFACTURED BY LITTLE FUSE, P/N 287003.
8. N.E.C. CLASS 2, 24V.
9. CCH NOT USED ON ALL UNITS.

A250110

# Ladder Wiring Diagram 460-3-60

## LADDER WIRING DIAGRAM
## DANGER: ELECTRICAL SHOCK HAZARD DISCONNECT POWER BEFORE SERVICING

### LEGEND

| | | | | | | | |
|---|---|---|---|---|---|---|---|
| CRANKCASE HEATER | **DR** DEFROST RELAY (SEE DB) | **HR** HEATER RELAY | **OFM** OUTDOOR FAN MOTOR | | |
| COMPRESSOR MOTOR | **DSB** DISSIPATION BOARD | **IFB** INDOOR FAN BOARD | **RDS** REFRIG. DETECTION SENSOR | **TRAN** TRANSFORMER | |
| DEFROST BOARD | **GND** GROUND | **IFM** INDOOR FAN MOTOR | **RVS** REVERSING VALVE | **T-STAT** THERMOSTAT | |
| DEFROST TEMPERATURE SWITCH | **HPS** HIGH PRESSURE SWITCH | **LPS** LOW PRESSURE SWITCH | **SOL** COMPRESSOR SOLENOID | | |

| | | |
|---|---|---|
| FIELD SPLICE | SPLICE (MARKED) | ACCESSORY OR OPTIONAL WIRING |
| TERMINAL (MARKED) | FACTORY LOW VOLTAGE | FACTORY HI VOLTAGE |
| TERMINAL (UNMARKED) | FIELD CONTROL WIRING | **C** CONTACTOR |
| SPLICE | FIELD POWER WIRING | **CAP** CAPACITOR |

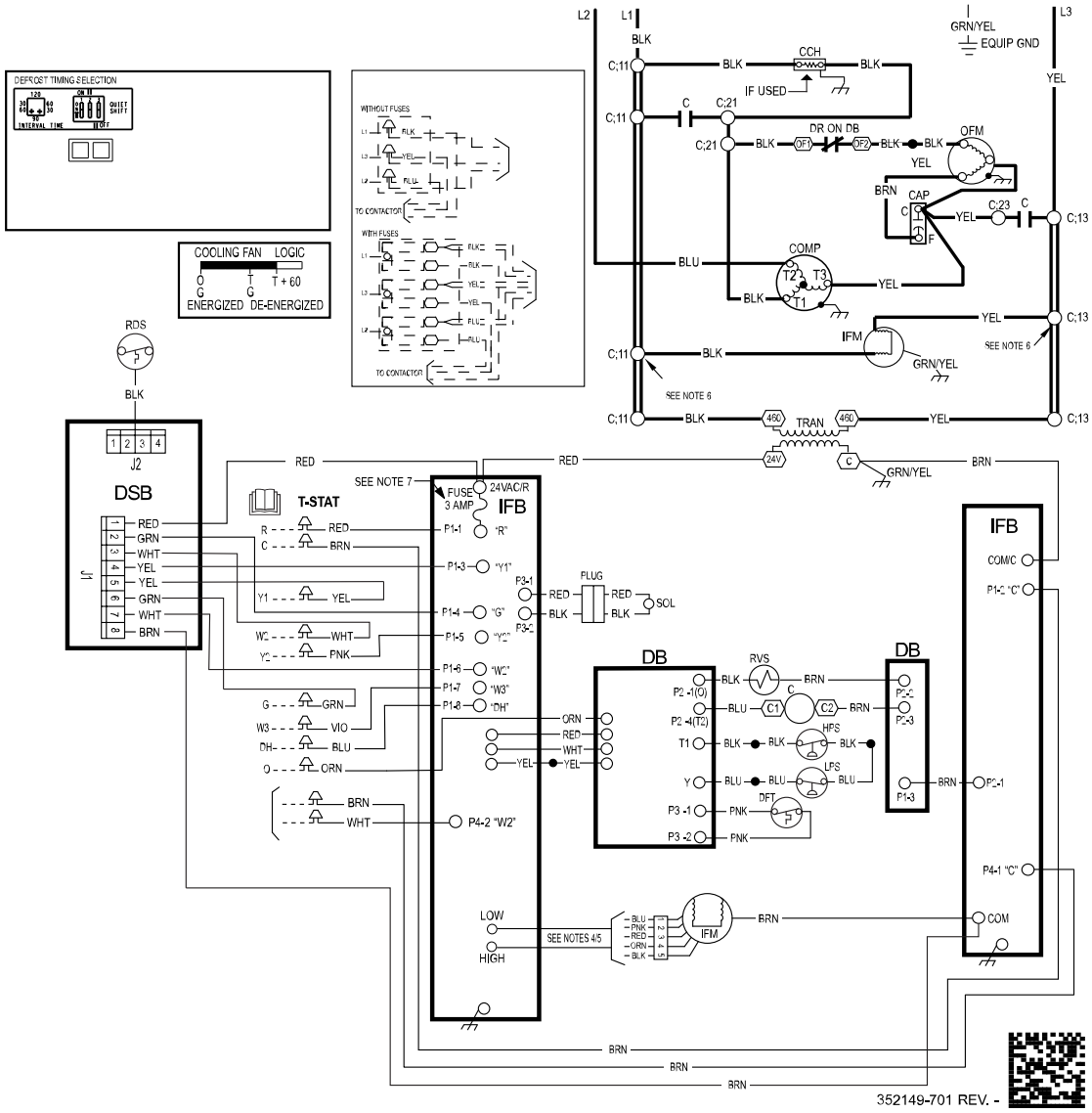


A250111

# Controls

## Sequence of Operation

a. Continuous Fan
   (1.) Thermostat closes circuit R to G energizing the blower motor for continuous fan. The indoor fan is energized on low speed.

b. Cooling Mode
   (1.) Low Stage: Thermostat closes R to G, R to Y1, and R to O. The compressor and indoor fan are energized on low speed. The outdoor fan is also energized
   (2.) High Stage: Thermostat closes R to G, R to Y1, R to Y2, and R to O. The compressor and indoor fan are energized on high speed. The outdoor fan is also energized.

c. Electric Heating Mode
   (1.) Thermostat closes circuit R to W2 or W3, and R to G. There are no on or off delays.

d. Heat Pump Heating
   (1.) Low Stage: Thermostat closes R to G, R to Y1. The compressor and indoor fan are energized on low speed. The outdoor fan is also energized
   (2.) High Stage: Thermostat closes R to G, R to Y1, R to Y2. The compressor and indoor fan are energized on high speed. The outdoor fan is also energized.

e. Heat Pump Heating with Auxiliary Heat
   (1.) Thermostat closes circuits R to G, R to Y and R to W/W1 or W2. The compressor, indoor and outdoor fans are energized, as well as the electric heat relays.

f. Defrost Mode

The defrost mode is automatically energized by the defrost board during heating mode. The defrost board energizes “O” (reversing valve) and “W2” (electric heat). It also de-energizes the outdoor fan. When defrost is complete, unit will return to heating mode. If room thermostat is satisfied during defrost, unit will shut down and restart in defrost on next call for heat.

# Guide Specifications

## Packaged Air Conditioner System
## Constant Volume Application
## HVAC Guide Specifications

Size Range:**2 to 5 Tons, Nominal Cooling**

SYSTEM DESCRIPTION

Outdoor rooftop mounted or ground mounted, electric cooling unit utilizing a hermetic 2-stage scroll compressor for cooling duty. Unit shall discharge supply air vertically or horizontally as shown on contract drawings. Condenser fan/coil section shall have a draw-thru design with vertical discharge for minimum sound levels.

QUALITY ASSURANCE

- Unit shall be rated in accordance with AHRI Standards 210/240 and AHRI 270.
- Unit shall be designed and certified in accordance with UL 60335-2-40 and 60335-1.
- Unit shall be manufactured in a facility registered to ISO 9001 manufacturing quality standard.
- Roof curb shall be designed to conform to NRCA Standards.
- Insulation and adhesives shall meet NFPA 90A requirements for flame spread and smoke generation.
- Cabinet insulation shall meet ASHRAE Standard 62P.

DELIVERY, STORAGE AND HANDLING

Unit shall be stored and handled per manufacturer's recommendations.

Part 2 — Products

EQUIPMENT

1. General:
   Factory-assembled, single-piece, heating and cooling unit. Contained within the enclosure shall be all factory wiring, piping, controls, refrigerant charge with R-454B refrigerant, and special features required prior to field start-up.
2. Unit Cabinet:
   a. Unit cabinet shall be constructed of phosphated, zinc-coated, pre-painted steel capable of with-standing 500 hours in salt spray.
   b. Normal service shall be through a single removable cabinet panel.
   c. The unit shall be constructed on a rust proof unit base that has an externally trapped, integrated sloped drain.
   d. Evaporator fan compartment top surface shall be insulated with a minimum 1/2-in. (12.7 mm) thick, flexible fiberglass insulation, coated on the air side and retained by adhesive and mechanical means. The evaporator wall sections will be insulated with a minimum semi-rigid foil-faced board capable of being wiped clean. Aluminum foil-faced fiberglass insulation shall be used in the entire indoor air cavity section.
   e. Unit shall have a field-supplied condensate trap.
3. Fans:
   a. The evaporator fan shall be a multi-speed ECM Blower Motor.
   b. Fan wheel shall be made from steel, be double-inlet type with forward curved blades with corrosion resistant finish. Fan wheel shall be dynamically balanced.
   c. Condenser fan shall be direct drive propeller type with aluminum blades riveted to corrosion resistant steel spiders, be dynamically balanced, and discharge air vertically.
4. Compressor:
   a. Fully hermetic compressors with factory-installed vibration isolation.
   b. 2-Stage scroll compressor shall be standard on all units.
5. Coils:
   Tin-plated copper tubes on indoor coil. Copper tubes on outdoor coil.
6. Refrigerant Components:
   Refrigerant expansion device shall be of the TXV (thermostatic expansion valve) for cooling and fixed orifice for heating.
7. Filters:
   Filter section shall consist of field-installed, throwaway, 1-in. (25 mm) thick fiberglass filters of commercially available sizes.
8. Controls and Safeties:
   a. Unit controls shall be complete with a self-contained low voltage control circuit.
   b. Compressors shall incorporate a solid-state compressor protector that provides reset capability.
9. Operating Characteristics:
   a. Unit shall be capable of starting and running at 125°F (51°C) ambient outdoor temperature per maximum load criteria of AHRI Standard 210/240.
   b. Compressor with standard controls shall be capable of operation down to 40°F (4°C) ambient outdoor temperature.
   c. Units shall be provided with fan time delay to prevent cold air delivery before the heat exchanger warms up.
   d. Unit shall be provided with 90-second fan time delay after the thermostat is satisfied.
10. Electrical Requirements:
    All unit power wiring shall enter the unit cabinet at a single location.
11. Motors:
    a. Compressor motors shall be of the refrigerant-cooled type with line-break thermal and current overload protection.
    b. All fan motors shall have permanently lubricated bearings, and inherent, automatic reset, thermal overload protection.
12. Special Options/Kits Available:
    a. Coil Options:
       Base unit with tin plated indoor coil hairpins.
    b. Compressor Start Kit (single phase units only):
       Shall provide additional starting torque for single-phase compressors.
    c. Corporate Thermostat:
       To provide for one-stage heating and cooling in addition manual or automatic changeover and indoor fan control.
    d. Crankcase Heater Kit:
       Shall provide anti-floodback protection for low-load cooling applications.
    e. Economizer for 2-stage operation:
       (Horizontal and Vertical with Jade Honeywell W7220 controller, Honeywell communicating actuator, and dry bulb sensor. (Contact MicroMetl Customer Service at 1-800-662-4822 to order.)

**NOTE:** The dehumidification feature on high stage cooling does not support use of an economizer.

(1.) Economizer controls capable of providing free cooling using outside air.
(2.) Equipped with low leakage dampers not to exceed 3% leakage, at 1.0 IN. W.C. pressure differential.
(3.) Spring return motor shuts off outdoor damper on power failure.

## Guide Specifications (cont)

f. Electric Heaters:
   (1.) Electric heater shall be available as a field-installed option.
   (2.) Heater elements shall be open wire type, adequately supported and insulated with ceramic bushings.
   (3.) Electric heater packages must provide single point power connection capability.

g. Filter Rack Option or Kit:
   Shall provide filter mounting for downflow applications. Offered as an accessory.

h. Flat Roof Curb Kit:
   Curbs shall have seal strip and a wood nailer for flashing and shall be installed per manufacturer's instructions.

i. Low Ambient Package Kit:
   Shall consist of a solid-state control and condenser coil temperature sensor for controlling condenser-fan motor operation, which shall allow unit to operate down to 0°F (-17.7°C) outdoor ambient temperature when properly installed.

j. Manual Outdoor Air Damper Kit:
   Package shall consist of damper, birdscreen, and rainhood which can be preset to admit outdoor air for year-round ventilation.

k. Square-To-Round Duct Transitions Kit (24-48 size):
   Shall have the ability to convert the supply and return openings from rectangular to round.

l. Cabinet air leakage of 2.0% or less at .5 in. W.C. when tested in accordance with ASHRAE standard 193.

m. Dual Point Electric Heaters Kit
   Allows you to power the electric heater and unit contactor separately by having two individual field power supply circuits connected respectively.

n. Advanced Dehumidification Package
   Standard unit with a dedicated DEHUM features that enables owner controlled dehumidification. Additionally, this package comes with tin plated indoor coil hairpins. Available as a factory installed option.

Training

My Learning Center is your central location for professional residential HVAC training resources that help strengthen careers and businesses. We believe in providing high quality learning experiences both online and in the classroom.

Access My Learning Center with your HVACpartners credentials at www.mlctraining.com. Please contact us at mylearning@carrier.com with questions.

© 2025 Carrier. All rights reserved.

**Manufacturer reserves the right to change, at any time, specifications and designs without notice and without obligations.**