619PHA
High Wall Ductless System
Sizes 09 to 12

bryant®

Service Manual

TABLE OF CONTENTS

PAGE

SAFETY CONSIDERATIONS 1
INTRODUCTION 1
MODEL/SERIAL NUMBER NOMENCLATURES 2
SPECIFICATIONS 3
COMPATIBILITY 3
DIMENSIONS 4
CLEARANCES 5
ELECTRICAL DATA 6
WIRING 6
CONNECTION DIAGRAM 6
WIRING DIAGRAM 7
FAN AND MOTOR SPECIFICATIONS 7
REFRIGERATION CYCLE DIAGRAM 8
REFRIGERANT LINES 9
SYSTEM EVACUATION AND CHARGING 9
OPERATION MODES AND FUNCTIONS 10
TROUBLESHOOTING 15
ERROR DIAGNOSIS AND TROUBLESHOOTING 17
QUICK MAINTENANCE BY ERROR CODE 21
TROUBLESHOOTING BY ERROR CODE 22
DIAGNOSIS AND SOLUTION 23
DISASSEMBLY INSTRUCTIONS 36
APPENDICES 46

SAFETY CONSIDERATIONS

Installing, starting up, and servicing air−conditioning equipment can be hazardous due to system pressures, electrical components, and equipment location (roofs, elevated structures, etc.).

Only trained, qualified installers and service mechanics should install, start−up, and service this equipment.

Untrained personnel can perform basic maintenance functions such as cleaning coils. All other operations should be performed by trained service personnel.

When working on the equipment, observe precautions in the literature and on tags, stickers, and labels attached to the equipment.

Follow all safety codes. Wear safety glasses and work gloves. Keep quenching cloth and fire extinguisher nearby when brazing. Use care in handling, rigging, and setting bulky equipment.

Read this manual thoroughly and follow all warnings or cautions included in literature and attached to the unit. Consult local building codes and National Electrical Code (NEC) for special requirements.

Recognize safety information. This is the safety−alert symbol ⚠. When you see this symbol on the unit and in instructions or manuals, be alert to the potential for personal injury. Understand these signal words: **DANGER**, **WARNING**, and **CAUTION**.

These words are used with the safety−alert symbol. **DANGER** identifies the most serious hazards which **will** result in severe personal injury or death. **WARNING** signifies hazards which **could** result in personal injury or death. **CAUTION** is used to identify unsafe practices which **may** result in minor personal injury or product and property damage. **NOTE** is used to highlight suggestions which **will** result in enhanced installation, reliability, or operation.

⚠ WARNING

ELECTRICAL SHOCK HAZARD

Failure to follow this warning could result in personal injury or death.

Before installing, modifying, or servicing system, main electrical disconnect switch must be in the OFF position. There may be more than 1 disconnect switch. Lock out and tag switch with a suitable warning label.

⚠ WARNING

EXPLOSION HAZARD

Failure to follow this warning could result in death, serious personal injury, and/or property damage.

Never use air or gases containing oxygen for leak testing or operating refrigerant compressors. Pressurized mixtures of air or gases containing oxygen can lead to an explosion.

⚠ CAUTION

EQUIPMENT DAMAGE HAZARD

Failure to follow this caution may result in equipment damage or improper operation.

Do not bury more than 36 in. (914 mm) of refrigerant pipe in the ground. If any section of pipe is buried, there must be a 6 in. (152 mm) vertical rise to the valve connections on the outdoor units. If more than the recommended length is buried, refrigerant may migrate to the cooler buried section during extended periods of system shutdown. This causes refrigerant slugging and could possibly damage the compressor at start−up.

INTRODUCTION

This service manual provides the necessary information to service, repair, and maintain the indoor units. Section 2 of this manual has an appendix with data required to perform troubleshooting. Use the Table of Contents to locate a desired topic.

MODEL/SERIAL NUMBER NOMENCLATURES

Table 1—Unit Sizes

SYSTEM TONS	VOLTAGE/PH/HZ	INDOOR MODEL
9	208−230/1/60	619PHAQ09XA3
12		619PHAQ12XA3

INDOOR UNIT

619 P H A Q 09 X A 3

619 = FAN COIL UNIT

P = MODEL

VOLTAGE
3 = 208/230−1−60

SYSTEM TYPE
H = HIGH WALL

INDOOR FAN COIL TYPE
Q = HEAT PUMP

MAJOR SERIES

A = VARIATION

X = NOT USED

NOMINAL CAPACITY
09 – 3/4 TON
12 – 1 TON

01 18 V 10001

Week of Manufacture

Year of Manufacture

V = ALL MODELS

Sequential Serial Number

Use of the AHRI Certified TM Mark indicates a manufacturer's participation in the program For verification of certification for individual products, go to www.ahridirectory.org.

SPECIFICATIONS

Table 2—Specifications

HEAT PUMP				
System	**SIZE**		**9**	**12**
	Indoor Model		619PHAQ09XA3	619PHAQ12XA3
Electrical	Voltage, Phase, Cycle	V/Ph/Hz	208/230–1–60	208/230–1–60
	Power Supply		Indoor unit powered from outdoor unit	
	MCA	A.	0.2	0.2
Controls	Wireless Remote Controller (°F/°C Convertible)		Standard	Standard
	Wired Remote Controller (°F/°C Convertible)		Optional	Optional
Operating Range	Cooling Indoor DB Min – Max	°F(°C)	63~86 (17~30)	63~86 (17~30)
	Heating Indoor DB Min – Max	°F(°C)	32~86 (0~30)	32~86 (0~30)
Piping	Pipe Connection Size – Liquid	in (mm)	1/4 (6.35)	1/4 (6.35)
	Pipe Connection Size – Suction	in (mm)	3/8 (9.52)	1/2 (12.7)
Indoor Coil	Face Area (sq. ft.)	Sq. Ft.	2.2	2.2
	No. Rows		4	4
	Fins per inch		21	21
	Circuits		5	5
Indoor	Unit Width	in (mm)	35.2 (895)	35.2 (895)
	Unit Height	in (mm)	11.7 (298)	11.7 (298)
	Unit Depth	in (mm)	9.8 (248)	9.8 (248)
	Net Weight	lbs (kg)	29 (13)	29 (13)
	Fan Speeds		4	4
	Airflow (lowest to highest)	CFM	144/245/295/345	168/252/306/357
	Sound Pressure (lowest to highest)	dB(A)	29/46	31/47
	Air Throw Data	ft (m)	22 (6.7)	23 (7)

Performance may vary based on the outdoor unit matched to. See Table 3 for compatible outdoor units.

COMPATIBILITY

Table 3—Compatibility

Indoor Unit	**619PHAQ09XA3**	**619PHAQ12XA3**
Outdoor Unit Single Zone	38MPRAQ09AA3	38MPRAQ12AA3
Outdoor Unit Multi–zone	38MGRQ18B––3	
	38MGRQ24C––3	
	38MGRQ30D––3	
	38MGRQ36D––3	
	38MGRQ48E––3	

DIMENSIONS

Table 4—Indoor Unit Dimensions

HIGH WALL UNIT SIZE		9K	12K
Voltage		**(208/230V)**	**(208/230V)**
Height	In. (mm)	11.7 (298)	11.7 (298)
Width	In. (mm)	35.2 (895)	35.2 (895)
Depth	In. (mm)	9.8 (248)	9.8 (248)
Weight−Net	Lbs (kg)	29 (13)	29 (13)

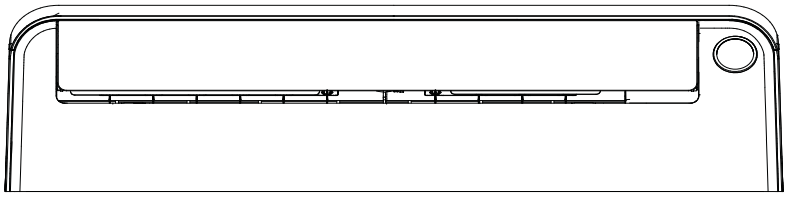

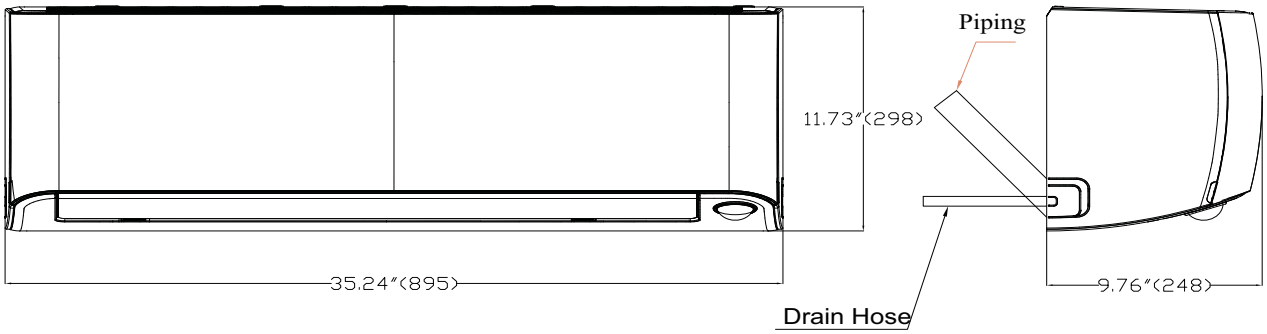

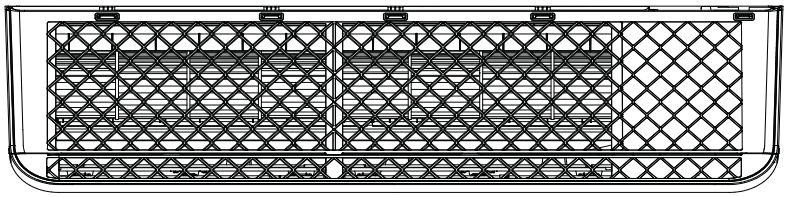

Drain Hose	Ø0.625"(16) L=25.20"(640)

Units: Inch (mm)

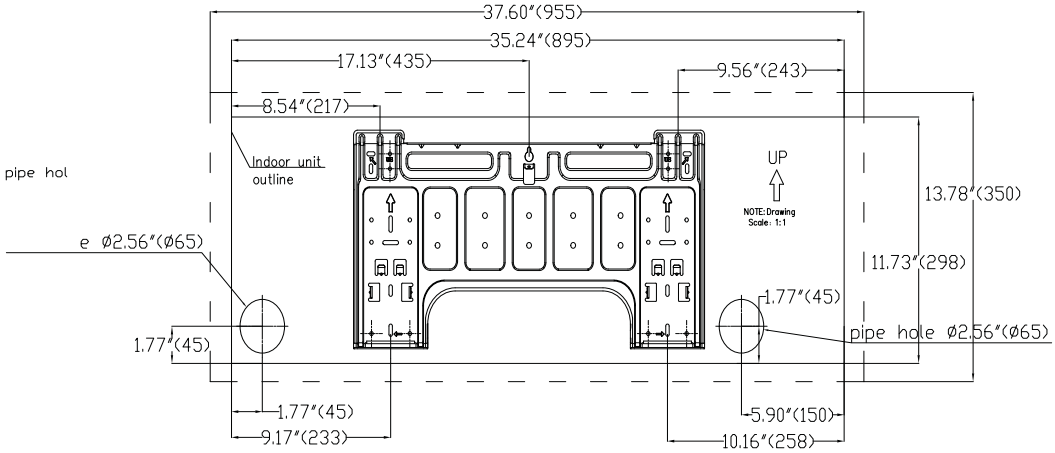

Fig. 1 – Sizes 9K and 12K

NOTE: Drain adaptor included with the indoor unit to allow the use of a 3/4 in. PVC Schedule 40 where the actual outside diameter is 1.05 in.

CLEARANCES

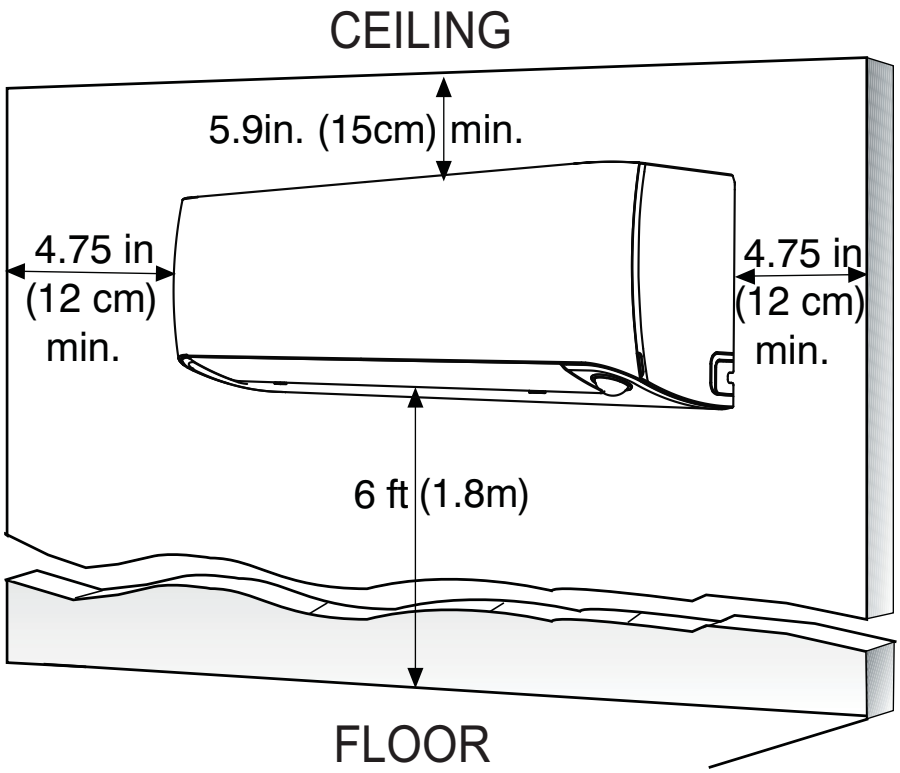

Fig. 2 – Indoor Unit Clearance

NOTE: The top clearance recommended for proper return airflow is 5.9in (15cm). Reduction of this clearance may decrease the performance of these units. This may be reduced to 3.2in (80mm) as long as the right and left clearances are achieved.

ELECTRICAL DATA

Table 5—Electrical Data Indoor High Wall

HIGH WALL UNIT SIZE	INDOOR FAN			MAX FUSE CB AMP
	V−Ph−Hz	FLA	HP	
9K	208/230−1−60	0.23	0.027	Refer to outdoor unit installation instructions – Indoor unit powered by the outdoor unit
12K		0.23	0.027	

*Permissible limits of the voltage range at which the unit will operate satisfactorily.

LEGEND

FLA - Full Load Amps

WIRING

All wires must be sized per NEC (National Electrical Code) or CEC (Canadian Electrical Code) and local codes. Use Electrical Data table MCA (minimum circuit amps) and MOCP (maximum over current protection) to correctly size the wires and the disconnect fuse or breakers respectively.

Per the caution note, only stranded copper conductors with a 600 volt insulation rating wire must be used.

Recommended Connection Method for Power and Communication Wiring:

The main power is supplied to the outdoor unit. The field supplied 14/3 stranded wire with ground with a 600 volt insulation rating, power/communication wiring from the outdoor unit to indoor unit consists of four (4) wires and provides the power for the indoor unit. Two wires are line voltage AC power, one is communication wiring (S) and the other is a ground wire. Wiring between indoor and outdoor unit is polarity sensitive. The use of BX wire is NOT recommended.

If installed in a high Electromagnetic field (EMF) area and communication issues exists, a 14/2 stranded shielded wire can be used to replace L2 and (S) between outdoor unit and indoor unit landing the shield onto ground in the outdoor unit only.

⚠ CAUTION

EQUIPMENT DAMAGE HAZARD

Failure to follow this caution may result in equipment damage or improper operation.

Wires should be sized based on NEC and local codes.

Use copper conductors only with a 600 volt insulation rating wire.

⚠ CAUTION

EQUIPMENT DAMAGE HAZARD

Failure to follow this caution may result in equipment damage or improper operation.

Be sure to comply with local codes while running wire from the indoor unit to the outdoor unit.

Every wire must be connected firmly. Loose wiring may cause the terminal to overheat or result in unit malfunction. A fire hazard may also exist. Ensure all wiring is tightly connected.

No wire should touch the refrigerant tubing, compressor or any moving parts.

Disconnecting means must be provided and shall be located within sight and readily accessible from the air conditioner.

Connecting cable with conduit shall be routed through the hole in the conduit panel.

CONNECTION DIAGRAM

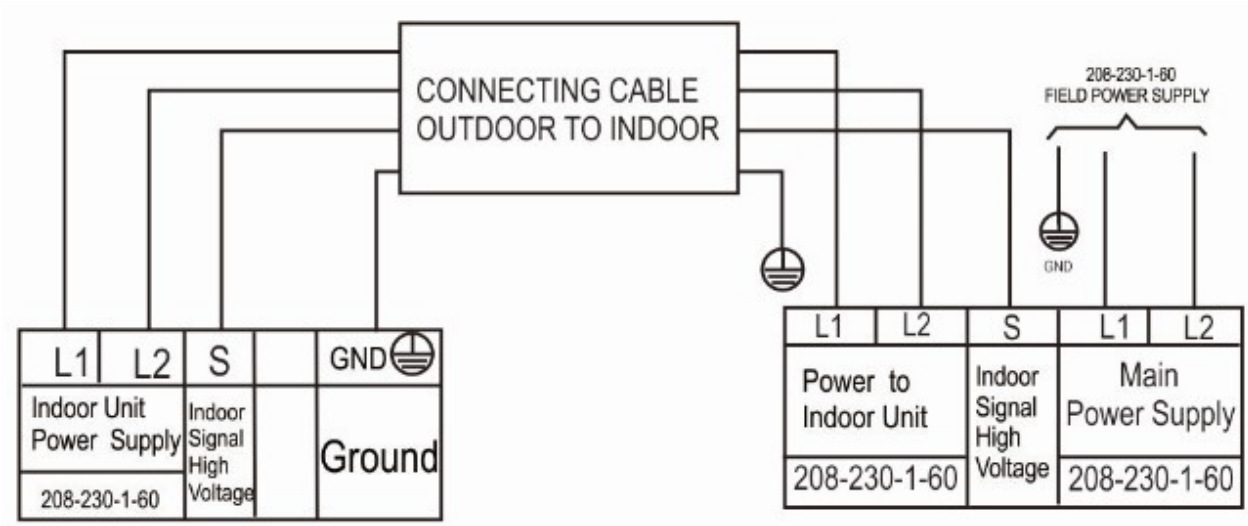

Fig. 3 – 208−230V

Notes:

1. Do not use thermostat wire for any connection between indoor and outdoor units.
2. All connections between indoor and outdoor units must be as shown. **The connections are polarity sensitive and improper wiring will result in a fault code.**

WIRING DIAGRAM

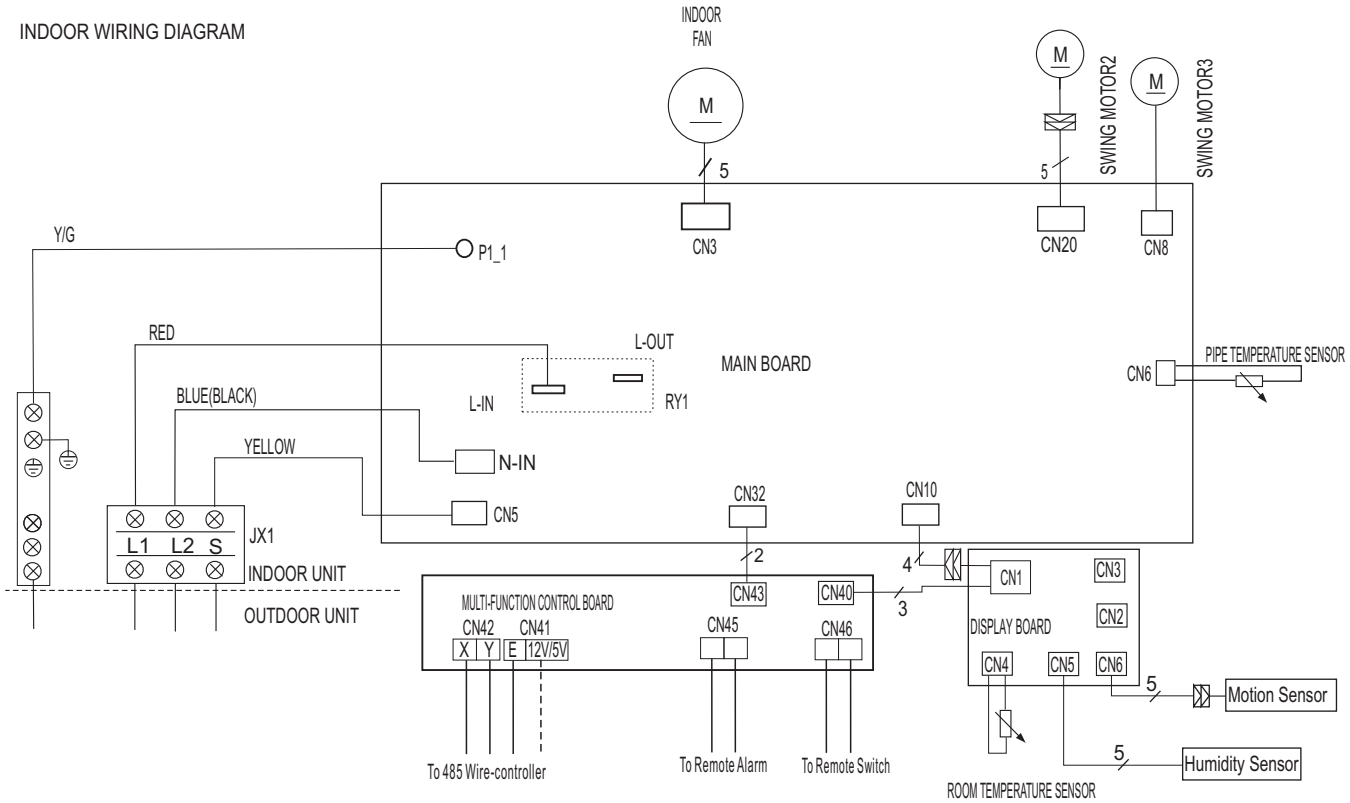

- - - - This symbol indicates the element is optional,the actual shape shall prevail.

Fig. 4 – Wiring Diagram Sizes 09−12 (208−230V)

FAN AND MOTOR SPECIFICATIONS

Table 6—Fan and Motor Specifications

High Wall Unit Size			9K (208/230V)	12K (208/230V)
High Wall Fan	Material		glass fiber+AS	glass fiber+AS
	Type		GL−108*670−IN	GL−108*670−IN
	Diameter	In (mm)	4.25(108)	4.25(108)
	Height	In (mm)	26.38(670)	26.38(670)
High Wall Fan Motor	Model		ZKFP−20−8−6−7	ZKFP−20−8−6−7
	Volts	V	208/230	208/230
	Phase		1	1
	Hertz		60	60
	FLA		0.034	0.034
	Type		DC	DC
	Insulation class		E	E
	Safe class		IPX0	IPX0
	Input	W	50	50
	Output	W	20	20
	Range of current	Amps	0.023	0.023
	Rated current	Amps	0.023±10%	0.023±10%
	Capacitor	μF	No Capacitor	
	Rated HP	HP	0.027	0.027
	Speed	rev/min	1000/850/650	1050/900/650
	Rated RPM	rev/min	1000	1050
	Max. input	W	70	70

REFRIGERATION CYCLE DIAGRAM

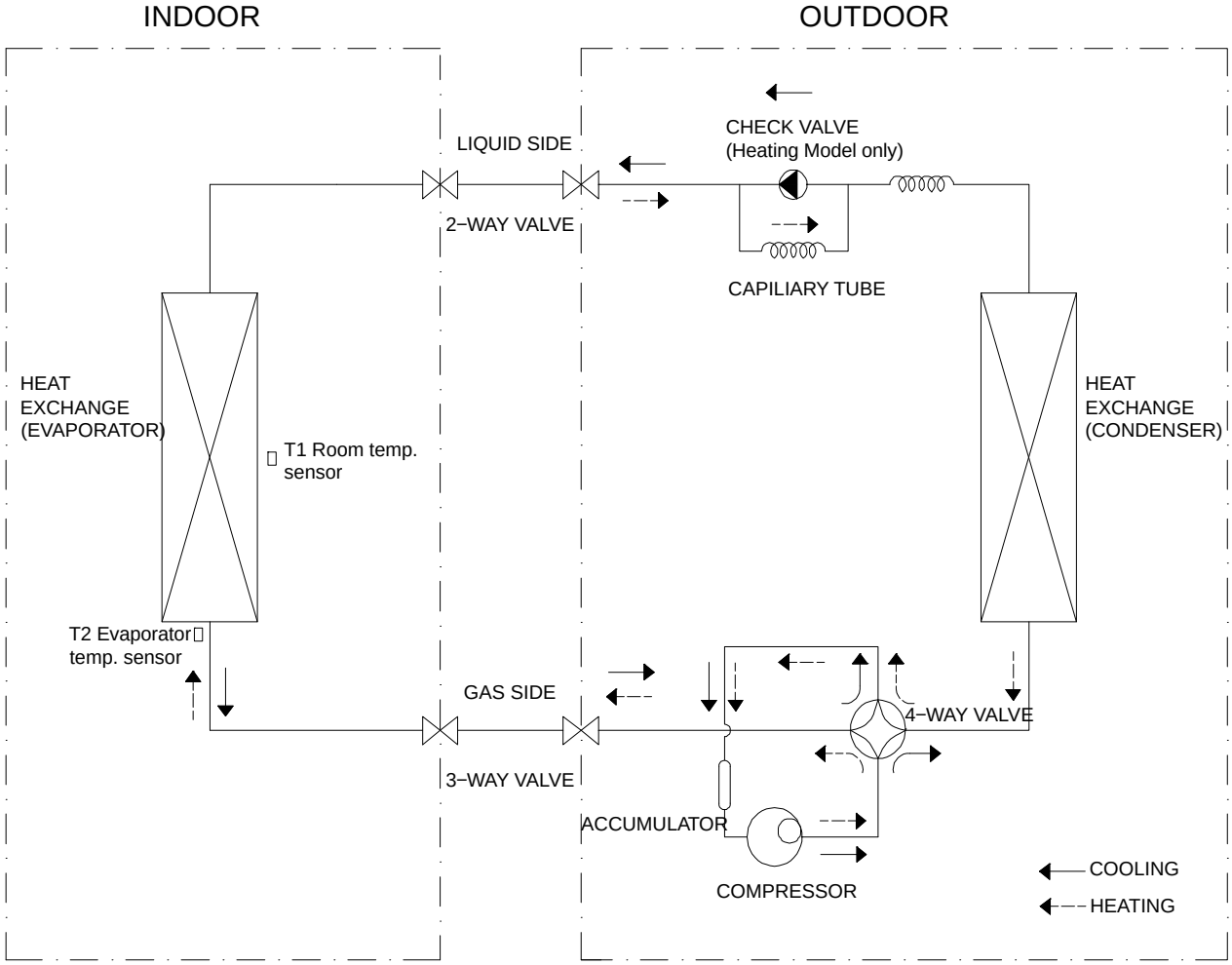

Fig. 5 – Heat Pumps

REFRIGERANT LINES

IMPORTANT: Both refrigerant lines must be insulated separately.

Table 2 lists the pipe sizes for the indoor unit. Refer to the outdoor unit installation instructions for other allowed piping lengths and refrigerant information.

SYSTEM EVACUATION AND CHARGING

⚠ CAUTION

UNIT DAMAGE HAZARD

Failure to follow this caution may result in equipment damage or improper operation.

Never use the system compressor as a vacuum pump.

Refrigerant tubes and indoor coil should be evacuated using the recommended deep vacuum method of 500 microns. The alternate triple evacuation method may be used if the following procedure is followed. Always break a vacuum with dry nitrogen.

System Vacuum and Charge

Using Vacuum Pump

1 Completely tighten flare nuts on the line set at both the indoor and outdoor units. **DO NOT** open the service valves on the outdoor unit for the new installation or the replacement unit. Open the service valves on the outdoor unit if repairs have been made to the refrigerant sealed system. Connect the manifold gauge low pressure hose to the charge port of the gas side service valve (see Fig. 6).

2 Connect the charge hose to the vacuum pump.

3 Fully open the low pressure valve of manifold gage (see Fig. 7).

4 Start the vacuum pump.

5 Evacuate using deep vacuum or triple evacuation method.

6 After evacuation is complete, fully close the pressure valve side of manifold gage and stop the vacuum pump operation.

7 The factory charge contained in the outdoor unit is good for up to 25ft. (8 m) of line length. If vacuum is complete per Fig. 10 or 11, open service valves to release factory charge into the system.

8 Disconnect the charge hose from the charge connection of the gas side service valve.

9 Securely tighten the service valve caps.

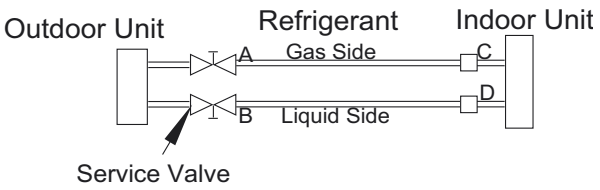

Fig. 6 – Service Valve

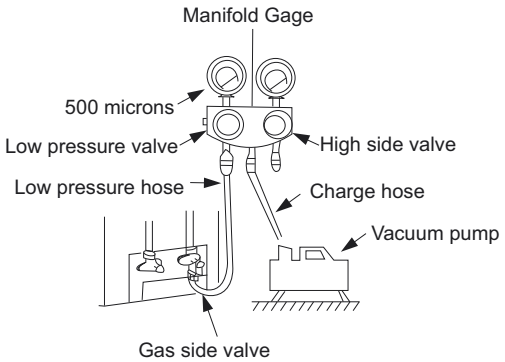

Fig. 7 – Manifold

Deep Vacuum Method

The deep vacuum method requires a vacuum pump capable of pulling a vacuum of 500 microns and a vacuum gage capable of accurately measuring this vacuum depth. The deep vacuum method is the most positive way of assuring a system is free of air and liquid water (see Fig. 8).

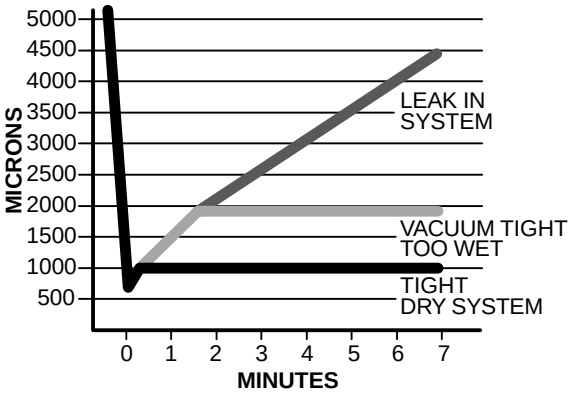

Fig. 8 – Deep Vacuum Graph

Triple Evacuation Method

The triple evacuation method should be used. Refer to Fig. 9 and proceed as follows:

1 Pump the system down to 1500 microns and allow the pump to continue operating for an additional 15 minutes.

2 Close the service valves and shut off the vacuum pump.

3 Connect a dry nitrogen cylinder and regulator to the system and break vacuum until the system reaches 2 psig.

4 Close the service valve and allow the system to stand for 1hr. During this time, the dry nitrogen can diffuse throughout the system absorbing moisture.

5 Pump the system down to 1000 microns.

6 Break the vacuum with dry nitrogen (2 psig).

7 Pump the system down to 500 microns.

8 Perform the hold test for 30 minutes.

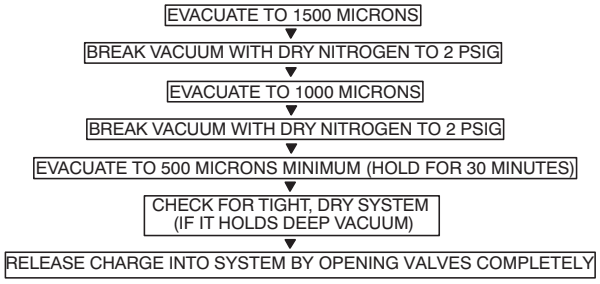

Fig. 9 – Triple Evacuation Method

Final Tubing Check

IMPORTANT: Check to be certain factory tubing on both indoor and outdoor unit has not shifted during shipment. Ensure tubes are not rubbing against each other or any sheet metal. Pay close attention to feeder tubes, making sure wire ties on feeder tubes are secure and tight.

OPERATION MODES AND FUNCTIONS

Abbreviation

Table 7—Unit Element Abbreviations

Abbreviation	Element
T1	Indoor room temperature
T2	Evaporator Coil temperature
T3	Condenser Coil temperature
T4	Outdoor ambient temperature
Tsc	Adjusted setting temperature
TP	Compressor discharge temperature

Safety Features

Compressor Three−Minute Delay at Restart

Compressor functions are delayed for up to ten seconds upon the first start−up of the unit, and are delayed for up to three minutes upon subsequent unit restarts.

Automatic shutoff based on discharge temperature

If the compressor discharge temperature exceeds 226°F (108°C) for nine seconds, the compressor ceases operation.

Automatic shutoff based on fan speed

If the indoor fan speed registers below 300RPM or over 1500RPM for an extended period of time, the unit ceases operation and the corresponding error code is displayed on the indoor unit.

Inverter module protection

The inverter module has an automatic shutoff mechanism based on the unit's current, voltage, and temperature. If automatic shutoff is initiated, the corresponding error code is displayed on the indoor unit and the unit ceases operation.

Indoor fan delayed operation

- When the unit starts, the louver is automaticallyactivated and the indoor fan will operate after a period of setting time or when the louver is in place.
- If the unit is in **HEATING** mode, the indoor fan is regulated by the anti−cold wind function.

Compressor Preheating

Preheating is automatically activated when the T4 sensor is lower than setting temperature.

Sensor redundancy and automatic shutoff

- If one temperature sensor malfunctions, the air conditioner continues operation and displays the corresponding error code, allowing for emergency use.
- When more than one temperature sensor malfunctions, the air conditioner ceases operation.

Display Function

Unit Display Functions

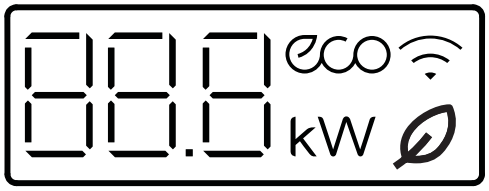

Fig. 10 – Unit Display Functions

Table 8—Unit Function Displays

Function	Display
Temperature	Set temperature value
Temperature (FAN and DRYING mode)	Room temperature
Activation of Timer ON, Fresh, Swing, Turbo, or Silent	on (3s)
Cancellation of Timer OFF, Fresh, Swing, Turbo, or Silent	of (3s)
Defrost	dF
Warming in heating mode	cF
Self-clean	SC
Heating in room temp under 46°F (8°C) or 54°F (12°C)	FP
Fresh (Not available on these systems)	
ECO function	eco
Wi-Fi control	
The current operation power (Not available on these systems)	kW

FAN Mode

When the **FAN** mode is activated:

- The outdoor fan and compressor stop.
- Temperature control is disabled and the indoor room temperature is displayed.
- The indoor fan speed can be set to 1%~100%, or **AUTO**.
- The louver operations are identical to those in **COOLING** mode.
- Auto fan: In **FAN−ONLY** mode, the AC operates the same as auto fan in the **COOLING** mode with the temperature set at 75°F 24°C (Tsc =75°F (24°C).

COOLING Mode

Compressor Control

Reach the configured temperature:

1 When the compressor runs continuously for less than 120 minutes.

- If the following conditions are satisfied, the compressor ceases operation.
  - While the calculated frequency(fb) is less than the minimum limit frequency(FminC).
  - While protective time is more than or equal to ten minutes.
  - While T1 is lower than or equal to (Tsc−CDIFTEMP 1°F (−0.5°C)

NOTE: CDIFTEMP is the EEPROM setting parameter. It is 4°F (2°C) usually.

2 When the compressor runs continuously for more than 120 minutes.

- If the following conditions are satisfied, the compressor ceases operation.
  - When calculated frequency(fb) is less than minimum limit frequency(FminC).
  - When protective time is more than or equal to ten minutes.
  - When T1 is lower than or equal to (Tsc−CDIFTEMP).

NOTE: CDIFTEMP is the EEPROM setting parameter. It is 4°F (2°C) usually.

3 If one of the following conditions is satisfied, regardless of time.

- Compressor running frequency is more than the test frequency.
- When the compressor running frequency is equal to the test frequency, T4 is more than 59°F (15°C) or no T4 or T4 fault.
- Change setting temperature
- Turbo or sleep function on/off
- Various frequency limit shutdown occurs

NOTE: CDIFTEMP is EEPROM setting parameter. It is 4°F (2°C) usually.

Indoor Fan Control

1 In the **COOLING** mode, the indoor fan operates continuously. The fan speed can be set to 1%−100%, or **AUTO**.

2 **AUTO** fan

- Descent Curve
  - When T1−Tsc is lower than or equal to 7°F (3.5°C), fan speed reduces to 80%;
  - When T1−Tsc is lower than or equal to 2°F (1°C), fan speed reduces to 60%;
  - When T1−Tsc is lower than or equal to 1°F (0.5°C), fan speed reduces to 40%;
  - When T1−Tsc is lower than or equal to 0°F (0°C), fan speed reduces to 20%;
  - When T1−Tsc is lower than or equal to −1°F (−0.5°C), fan speed reduces to 1%.
- Rise Curve
  - When T1−Tsc is higher than 0°F (0°C), fan speed increases to 20%;
  - When T1−Tsc is higher than 1°F (0.5°C), fan speed increases to 40%;
  - When T1−Tsc is higher than 2°F (1°C), fan speed increases to 60%;
  - When T1−Tsc is higher than 3°F (1.5°C), fan speed increases to 80%;
  - When T1−Tsc is higher than 8°F (4°C), fan speed increases to 100%.

Outdoor Fan Control

- The outdoor unit runs at a different fan speed according to T4 and the compressor running frequency.
- For different outdoor units, the fan speeds are different.

Condenser Temperature Protection

When the condenser temperature exceeds a configured value, the compressor ceases operations.

Evaporator Temperature Protection

When the evaporator temperature drops below a configured value, the compressor and outdoor fan ceases operations.

HEATING Mode

Compressor Control

1 Reach the configured temperature:

- If the following conditions are satisfied, the compressor ceases operation.
  - While the calculated frequency(fb) is less than the minimum limit frequency(FminC).
  - When the protective time is more than or equal to ten minutes.
  - When T1 is higher than or equal to Tsc+HDIFTEMP2.

NOTE: HDIFTEMP2 is the EEPROM setting parameter. It is 4°F (2°C) usually.

- If one of the following conditions is satisfied, regardless of time.
  - Compressor running frequency is more than test frequency.
  - When the compressor running frequency is equal to the test frequency, T4 is more than 59°F (15°C) or no T4 or T4 fault.
  - Change the setting temperature.
  - Turbo or sleep function on or off.

2 When the current is higher than the predefined safe value, the surge protection is activated, causing the compressor to cease operations.

Indoor Fan Control

1 In the **HEATING** mode, the indoor fan operates continuously. The fan speed can be set to 1%−100%, or muted.

2 **AUTO** fan

- Rise curve
  - When T1−Tsc is higher than −3°F (−1.5°C), fan speed reduces to 80%;
  - When T1−Tsc is higher than 0°F (0°C), fan speed reduces to 60%;
  - When T1−Tsc is higher than 1°F (0.5°C), fan speed reduces to 40%;
  - When T1−Tsc is higher than 2°F (1°C), fan speed reduces to 20%.
- Descent curve
  - When T1−Tsc is lower than or equal to 1°F (0.5°C), fan speed increases to 20%;
  - When T1−Tsc is lower than or equal to 0°F (0°C), fan speed increases to 60%;
  - When T1−Tsc is lower than or equal to −3°F (−1.5°C), fan speed increases to 80%;
  - When T1−Tsc is lower than or equal to −6°F (−3°C), fan speed increases to 100%.

Outdoor Fan Control

- The outdoor unit runs at a different fan speed according to T4 and compressor running frequency.
- For different outdoor units, the fan speeds differ.

DEFROSTING Mode

- The unit enters defrosting mode according to changes in the temperature value of T3 as well as the compressor running time.
- In defrosting mode, the compressor continues to run, the indoor and outdoor blower and fan motors will cease operation, the defrost light of the indoor unit will turn on, and the „dF" symbol appears.
- If any one of the following conditions is satisfied, defrosting ends and the machine switches to the normal **HEATING** mode:
  - T3 rises above TCDE1°C.
  - T3 maintained above TCDE2°C for 80 seconds.
  - Unit runs for 15 minutes consecutively in the **DEFROSTING** mode.

Evaporator Temperature Protection

- **Off:** Compressor stops.
- **Decrease:** Decrease the running frequency to the lower level per 20 seconds.
- **Hold:** Keep the current frequency.
- **Resume:** No limitation for frequency.

AUTO Mode

- This mode can be selected with the remote controller and the setting temperature can be changed between 60°F~86°F (16°C~30°C).
- In the **AUTO** mode, the machine selects the **COOLING**, **HEATING**, **AUTO−DRYING** or **FAN−ONY** mode on the basis of T1,Ts, T4 and relative humidity.
- If the setting temperature is modified, the machine selects a new running function.

DRY Mode

In the **DRY** mode, the air conditioner operates the same as auto fan in the **COOLING** mode.

1 Mute function is active.

- All protections are activated and operate the same as they do that in **COOLING** mode.

2 Low Room Temperature Protection

- If the room temperature is lower than 50°F (...) 10°C, the compressor ceases operations and does not resume until the room temperature exceeds 54°F (...) 12°C.

Forced Operation Function

- Forced **COOLING** Mode:

The compressor and outdoor fan continue to run and the indoor fan runs at rated speed. After running for 30 minutes, the air conditioner switches to **AUTO** mode with a preset temperature of 75°F (24°C).

- Forced **AUTO** Mode:

Forced auto mode operates the same as normal **AUTO** mode with a preset temperature of 75°F (24°C).

- The unit exits the forced operation when it receives the following signals:
  - Switch on
  - Switch off
  - Timer on
  - Timer off
  - Changes in:
    - Mode
    - Fan Speed
    - Setting Temperature

Timer Function

- The Timing range is 24 hours.
- Timer on. The machine will turn on automatically when reaching the setting time.
- Timer off. The machine will turn off automatically when reaching the setting time.
- Timer on/off. The machine will turn on automatically when reaching the setting “on” time, and then turn off automatically when reaching the setting “off” time.
- Timer off/on. The machine will turn off automatically when reaching the setting “off” time, and then turn on automatically when reaching the setting “on” time.
- The timer function will not change the AC current operation mode. Suppose AC is off now, it will not start up firstly after setting the “timer off” function. And when reaching the setting time, the timer LED will be off and the AC running mode has not been changed.
- The setting time is relative time.
- The AC will quit the timer function when it has malfunction

SLEEP Function

- The **SLEEP** function is available in **COOLING**, **HEATING**, or **AUTO** modes.
- The operational process for sleep mode is as follows:
  - When cooling, the temperature rises 2°F (1°C) (to a maximum of 86°F (30°C) every hour. After 2 hours, the temperature stops rising and the indoor fan is fixed at low speed unless the indoor temperature rises above the new setpoint.
  - When heating, the temperature decreases 2°F (1°C) (to a minimum of 61°F (16°C)) every hour. After 2 hours, the temperature stops decreasing and the indoor fan is fixed at low speed unless the indoor temperature falls below the new setpoint. Anti−cold wind function takes priority.
- The **SLEEP** mode cancels if either **MODE**, **FAN**, or **ON/OFF** on the remote control is pressed.
- The timer setting is available in this mode.

Auto−Restart Function

- The indoor unit has an auto−restart module that allows the unit to restart automatically. The module automatically stores the current settings and, in the case of a sudden power failure, will restore those setting automatically within 3 minutes after power returns.
- If there is a power failure while the unit is running, the compressor starts 3 minutes after the unit restarts. If the unit was already off before the power failure, the unit stands by.

46°F (8°C) Heating

In the **HEATING** mode, the temperature can be set to as low as 46°F (8°C), preventing the indoor area from freezing if unoccupied during severe cold weather.

ECO Function

- Used to enter the energy efficient mode.
  - Under the **COOLING** mode, press **ECO**, the remote controller adjusts the temperature automatically to 75°F (24°C), **AUTO** fan speed to save energy (however only if the set temperature is less than 75°F (24°C). If the set temperature is more than 75°F (24°C) and 86°F (30°C), press **ECO**, the fan speed will change to **AUTO**, the set temperature will remain unchanged.
- When AC receives signals, such as switch off, Turbo operation, Silence operation, Self clean operation, Forced **COOLING** operation, mode setting, Sleeping mode, or adjusting the set temperature to less than 75°F (24°C), it will exit the **ECO** operation.
- Operation time in ECO mode is 8 hours. After 8 hours the air conditioner exits this mode.
- If there is a malfunctioning temperature sensor in, the air conditioner will exit **ECO** mode.
- The indoor fan runs at auto fan when it enters the **ECO** mode. The setting temperature and setting fan speed can be changed with the remote controller.

Self Clean

- Press “Self Clean” when the unit is in the **COOLING** or **DRYING** mode, the indoor unit will run at the low fan speed for 16 minutes then turn off.
- **Self Clean** keeps the indoor unit dry and prevents mold growth.

Follow Me

- If you press **FOLLOW ME** on the remote controller, the indoor unit will beep. This indicates the **FOLLOW ME** function is active.
- Once active, the remote controller will send a signal every 3 minutes, with no beeps. The unit automatically sets the temperature according to the measurements from the remote controller.
- The unit will only change modes if the information from the remote controller makes it necessary, not from the unit’s temperature setting.
- If the unit does not receive a signal for 7 minutes or you press **FOLLOW ME** the function turns off. The unit regulates temperature based on its own sensor and settings.

Silence

Press **SILENCE** on the remote controller to enable the **SILENCE** function. While this function is active, the indoor unit will run at faint breeze (1% fan speed), which reduces noise to the lowest possible level.

Intelligent Eye

With the built−in infrared sensor, the indoor unit detects human movement. The compressor operates in a low frequency if you leave the room for 30 minutes. The compressor operates in a lower frequency if you leave the room for 120 minutes, and resumes automatically when you come back, which helps save energy.

Information Inquiry

To enter information inquiry status, complete the following procedure within ten seconds:

- Press **LED** 3 times.
- Press **SWING** 3 times.
- If successful, you will hear beeps for two seconds.
- Use **LED** and **SWING** to cycle through the information displayed.
- Press **LED** to display the next code in the sequence. Press **SWING** to display the previous code.

Table 9 displays the information codes. The screen displays the code for two seconds, then the information for 25 seconds.

Table 9—Information Codes

Displayed Code	Explanation	Additional Notes
T1	T1	T1 temperature
T2	T2	T2 temperature
T3	T3	T3 temperature
T4	T4	T4 temperature
TP	TP	TP temperature
Targeted Frequency	FT	Targeted Frequency
Actual Frequency	TR	Actual Frequency
Compressor Current	dL	N/A
Outdoor AC Voltage	UO	N/A
Indoor capacity test	Sn	N/A
Reserve	−−	Running mode
Outdoor Fan Speed	Pr	Outdoor fan speed
EXV opening angle	LR	EXV opening angle
Indoor fan speed	IR	Indoor fan speed
Indoor humidity	HU	N/A
Adjusted setting temperature	TT	N/A
Indoor dust concentrations	DT	N/A
WIFI signal strength	IF	N/A
GA algorithm frequency	OT	N/A

TROUBLESHOOTING

Safety

⚠ WARNING

UNIT DAMAGE HAZARD

Electricity remains in capacitors even when the power supply is off. Ensure the capacitors are fully discharged before troubleshooting.

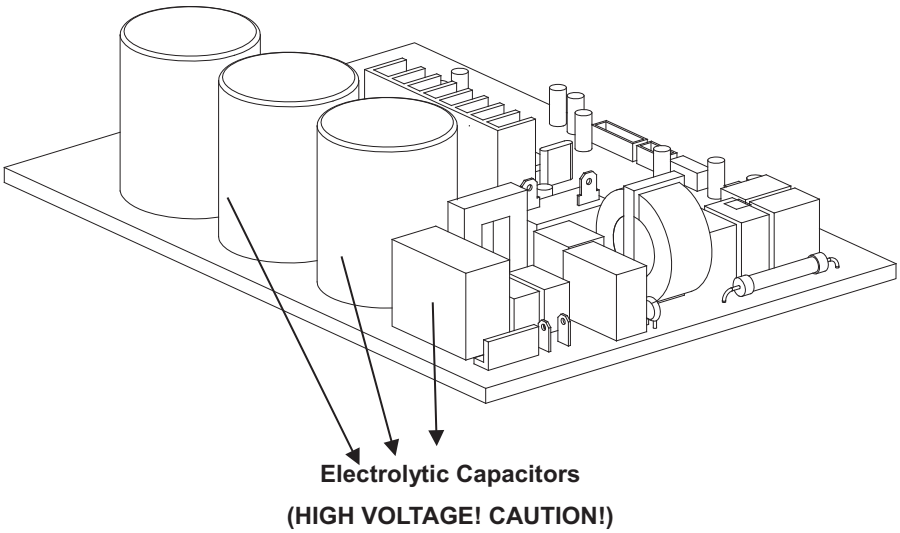

Fig. 11 – Electrolytic Capacitors

For other models, please connect discharge resistance (approximately 100Ω 40W) or a soldering iron (plug) between the +, − terminals of the electrolytic capacitor on the contrary side of the outdoor PCB.

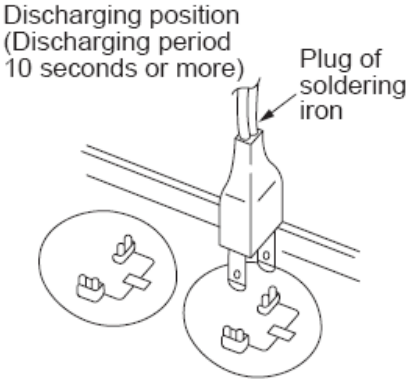

Fig. 12 – Discharge Position

NOTE: Fig. 12 is for reference only. Actual appearances may vary.

TROUBLESHOOTING (CONT)

Error Display (Indoor Unit)

When the indoor unit encounters a recognized error, the indicator light flashes in a corresponding series, the timer display may turn on or begin flashing, and an error code displays. These error codes are described in Table 10.

Table 10—Error Codes

Display	Error Information	Solution
E0/EA	Indoor unit EEPROM parameter error	Page 23
E1	Indoor / outdoor units communication error	Pages 24 – 25
E3	The indoor fan speed is operating outside of the normal range	Page 26
E4	Indoor room temperature sensor T1 is in open circuit or has short circuited	Pages 23 and 32
E5	Evaporator coil temperature sensor T2 is in open circuit or has short circuited	Page 32
EB	Communication error between the indoor PCB and display board	Page 33
EF	Intelligent eye module error	Page 28
F0	Overload current protection	Page 34
F1	Outdoor ambient temperature sensor T4 open circuit or short circuit	Page 32
F2	Condenser coil temperature sensor T3 is in open circuit or has short circuited	Page 32
F3	Compressor discharge temperature sensor TP open circuit or short circuit	Page 32
F4	Outdoor unit EEPROM parameter error	Page 23
F5	The outdoor fan speed is operating outside of the normal range	Page 26
P0	IPM malfunction or IGBT over–strong current protection	Page 35
P1	Over voltage or over low voltage protection	Page 29
P2	High temperature protection of IPM module	Page 30
P4	Inverter compressor drive error	Page 31

For other codes

The display board may show a garbled code or a code undefined by the service manual. Ensure that this code is not a temperature reading.

Troubleshooting

Test the indoor unit using the remote controller. If the unit display is working however will not respond to the remote, the indoor PCB requires replacement. If there is no display after pressing the “LED” button and the unit responds, the display board requires replacement.

ERROR DIAGNOSIS AND TROUBLESHOOTING WITHOUT ERROR CODE

⚠ WARNING

UNIT DAMAGE HAZARD

Be sure to turn off unit before any maintenance to prevent damage or injury.

Table 11—Remote Maintenance

Remote Maintenance	Electrical Circuit							Refrigerant Circuit							Others					
Possible causes of trouble	**Power failure**	**The main power tripped**	**Loose connections**	**Faulty transformer**	**The voltage is too high or too low**	**The remote control is powered off**	**Broken remote control**	**Dirty air filter**	**Dirty condenser fins**	**The setting temp is higher/lower than the room's (cooling/heating)**	**The ambient temp. is too high/low when the mode is cooling/heating**	**Fan mode**	**SILENCE function is activated (optional function)**	**Frosting and defrosting frequently**	**Heavy load condition**	**Loose hold down bolts and/or screws**	**Not air tight**	**Air inlet or outlet of either unit is blocked**	**Interference from cell phones towers and remote boosters**	**Shipping plates remained attached**
Unit will not start	☆	☆	☆	☆																
Operation is erratic, unpredictable or unit is unresponsive																			☆	
Cannot set desired temp.						☆	☆													
Unit is on but the wind is not cold (hot)										☆	☆	☆								
Unit runs, but shortly stops					☆					☆	☆									
The unit starts up and stops often					☆						☆			☆				☆		
Unit runs continuously however insufficient cooling (heating)								☆	☆	☆	☆		☆		☆		☆	☆		
Cool can not change to heat																				
Unit is noisy																☆				☆
Unit emits bad odor								☆												
Test method/ remedy	Test voltage	Close the power switch	Inspect connections – tighten	Change the transformer	Test voltage	Replace the battery of the remote control	Replace the remote control	Clean or replace	Clean	Adjust the setting temp.	Turn the AC later	Adjust to cool mode	Turn off SILENCE function.	Turn the AC later	Check the heat load	Tighten bolts or screws	Close all windows and doors	Remove the obstacles	Reconnect the power or press ON/OFF button on remote control to restart	Remove them

ERROR DIAGNOSIS AND TROUBLESHOOTING WITHOUT ERROR CODE (CONT)

Table 12—Field Maintenance

Field Maintenance	Electrical Circuit														
Possible causes of trouble	**Power failure**	**Blown fuse or varistor**	**Loose connections**	**Shorted or broken wires**	**Safety device opens**	**Faulty thermostat/ room temp sensor**	**Wrong setting place of temp sensor**	**Faulty transformer**	**Shorted or open capacitor**	**Faulty magnetic contact for compressor**	**Faulty magnetic contact for fan**	**Low voltage**	**Faulty stepping motor**	**Shorted or grounded compressor**	**Shorted or grounded fan motor**
Unit will not start	☆	☆	☆	☆	☆			☆							
Compressor will not start however the fan runs				☆		☆			☆	☆				☆	
Compressor and condenser (outdoor) fan will not start				☆		☆				☆					
Evaporator (indoor) fan will not start				☆					☆		☆				☆
Condenser (out-door) fan will not start				☆		☆			☆		☆				☆
Unit runs but shortly stops										☆		☆			
Compress or short cycles due to overload										☆		☆			
High discharge pressure															
Low discharge pressure															
High suction pressure															
Low suction pressure															
Unit runs continuously but insufficient cooling															
Too cool						☆	☆								
Compressor is noisy															
Horizontal louver can not revolve			☆	☆									☆		
Test method / remedy	Test voltage	Inspect fuse type & size	Inspect connections - tighten	Test circuits with tester	Test continuity of safety device	Test continuity of thermostat / sensor & wiring	Place the temp. sensor at the central of air in-let grille	Check control circuit with tester	Check capacitor with tester	Test continuity of coil & contacts	Test continuity of coil & contacts	Test voltage	Replace the stepping motor	Check resistance with Megger tester	Check resistance with Megger tester

ERROR DIAGNOSIS AND TROUBLESHOOTING WITHOUT ERROR CODE (CONT)

Table 13—Field Maintenance (Con't)

Field Maintenance	Refrigerant Circuit																	
Possible causes of trouble	**Compressor stuck**	**Refrigerant Shortage**	**Restricted liquid line**	**Dry air filter**	**Dirty evaporator coil**	**Insufficient air through evaporator coil**	**Refrigerant overcharge**	**Dirty or partially blocked condenser**	**Air or non-condensable gas in refrigerant cycle**	**Short cycling of condensing air**	**High temp. condensing medium**	**Insufficient condensing medium**	**Broken compressor internal parts**	**Insufficient compressor**	**Expansion valve obstructed**	**Expansion valve or capillary tube closed completely**	**Leaking power element on expansion valve**	**Power installation of feeler bulb**
Unit will not start																		
Compressor will not start however the fan runs	☆																	
Compressor and condenser (outdoor) fan will not start																		
Evaporator (indoor) fan will not start																		
Condenser (out-door) fan will not start																		
Unit runs but shortly stops		☆	☆				☆	☆								☆	☆	
Compress or short cycles due to overload		☆					☆	☆										
High discharge pressure							☆	☆	☆	☆	☆	☆						
Low discharge pressure		☆												☆				
High suction pressure							☆							☆				☆
Low suction pressure		☆	☆	☆	☆	☆									☆	☆	☆	
Unit runs continuously but insufficient cooling		☆	☆	☆	☆	☆		☆	☆	☆				☆				
Too cool																		
Compressor is noisy							☆						☆					
Horizontal louver can not revolve																		
Test method / remedy	Replace the compressor	Leak test	Replace the restricted part	Clean or replace	Clean coil	Check fan	Change charged refrigerant volume	Clean condenser or remove obstacle	Purge, evacuate and recharge	Remove obstruction to air flow	Remove obstruction in air or water flow	Remove obstruction in air or water flow	Replace compressor	Test compressor efficiency	Replace valve	Replace valve	Replace valve	Fix feeler bulb

ERROR DIAGNOSIS AND TROUBLESHOOTING WITHOUT ERROR CODE (CONT)

Table 14—Field Maintenance (Con't)

Field Maintenance	Others				
Possible causes of trouble	**Heavy load condition**	**Loosen hold down bolts and/or screws**	**Shipping plates remain attached**	**Poor choices of capacity**	**Contact of piping with other piping or external plate**
Unit will not start					
Compressor will not start however the fan runs					
Compressor and condenser (outdoor) fan will not start					
Evaporator (indoor) fan will not start					
Condenser (outdoor) fan will not start					
Unit runs but shortly stops					
Compress or short cycles due to overload					
High discharge pressure					
Low discharge pressure					
High suction pressure	☆				
Low suction pressure					
Unit runs continuously but insufficient cooling	☆			☆	
Too cool					
Compressor is noisy		☆	☆		☆
Horizontal louver can not revolve					
Test method / remedy	Check heat load	Tighten bolts or screws	Remove them	Choose AC of larger capacity or add the number of units	Fix piping as as not to touch each other or external pipe

QUICK MAINTENANCE BY ERROR CODE

If you do not have the time to test whether specific parts are faulty, you can directly change the required parts according the error code. You can find the parts to replace by error code in Tables 15 and 16.

Table 15—Error Codes

Part Requiring Replacement	Error Code								
	E0	EA	E1	E3	E4	E5	EB	EF	F0
Indoor PCB	✓	✓	✓	✓	✓	✓	✓	x	x
Outdoor PCB	x	x	✓	x	x	x	x	x	✓
Display Board	x	x	x	x	x	x	✓	x	x
Reactor	x	x	✓	x	x	x	x	x	x
Indoor fan motor	x	x	x	✓	x	x	x	x	x
Outdoor fan motor	x	x	x	X	x	x	x	x	x
Temperature sensor	x	x	x	x	✓	✓	x	x	x
T2 Sensor	x	x	x	x	x	x	x	x	x
Additional refrigerant	x	x	x	x	x	x	x	x	x
Compressor	x	x	x	x	x	x	x	x	✓
IPM board	x	x	x	x	x	x	x	x	x
Outdoor unit	x	x	x	x	x	x	x	x	✓
Intelligent Eye	x	x	x	x	x	x	x	✓	x

Table 16—Error Codes

Part Requiring Replacement	Error Code								
	F1	F2	F3	F4	F5	P0	P1	P2	P4
Indoor PCB	x	x	x	x	x	x	x	x	x
Outdoor PCB	✓	✓	✓	✓	✓	✓	✓	✓	✓
Display Board	x	x	x	x	x	x	x	x	x
Reactor	x	x	x	x	x	x	✓	x	x
Indoor fan motor	x	x	x	x	x	x	x	x	x
Outdoor fan motor	x	x	x	x	✓	x	x	x	x
Temperature sensor	✓	✓	✓	x	x	x	X	x	x
T2 Sensor	x	x	x	x	x	x	x	x	x
Additional refrigerant	x	x	x	x	x	x	x	x	x
Compressor	x	x	x	x	x	✓	x	x	✓
IPM board	x	x	x	x	x	✓	✓	x	✓
Outdoor unit	x	x	x	x	x	x	x	x	x
Intelligent Eye	x	x	x	x	x	x	x	x	x

TROUBLESHOOTING BY ERROR CODE

Common Check Procedures

Temperature Sensor Check

Disconnect the temperature sensor from PCB, measure the resistance value with a tester.

Temperature Sensors.

Room temp. (T1) sensor,

Indoor coil temp. (T2) sensor,

Outdoor coil temp.(T3) sensor,

Outdoor ambient temp.(T4) sensor,

Compressor discharge temp.(Tp) sensor.

Measure the resistance value of each winding by using the multi−meter.

Compressor Checking

Measure the resistance value of each winding by using the tester.

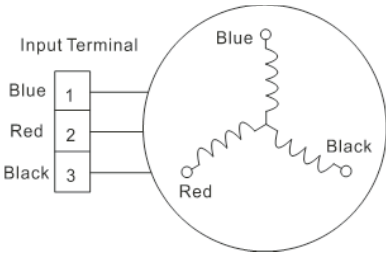

Fig. 13 – Compressor Checking

Table 17—Compressor Checking

Position	Resistance Value
	ATM115D43UFZ2
Blue – Red	1.87Ω(20°C/68°F)
Blue – Black	
Red – Blue	

Fig. 14 – Compressor Checking

IPM Continuity Check

Turn off the power, let the large capacity electrolytic capacitors discharge completely, and dismount the IPM. Use a digital tester to measure the resistance between P and UVWN; UVW and N.

Table 18—IPM Continuity Check

Digital Tester		Normal Resistance Value	Digital Tester		Normal Resistance Value
(+) Red	(–) Black		(+) Red	(–) Black	
P	N	∞ (Several MΩ)	U	N	∞ (Several MΩ)
	U		V		
	V		W		
	W		(+) Red		

DIAGNOSIS AND SOLUTION

E0/F4/EA (EEPROM Parameter Error)

Description: Indoor or outdoor PCB main chip does not receive feedback from EEPROM chip.

Recommended parts to prepare:

- Indoor PCB
- Outdoor PCB

Troubleshooting and Repair:

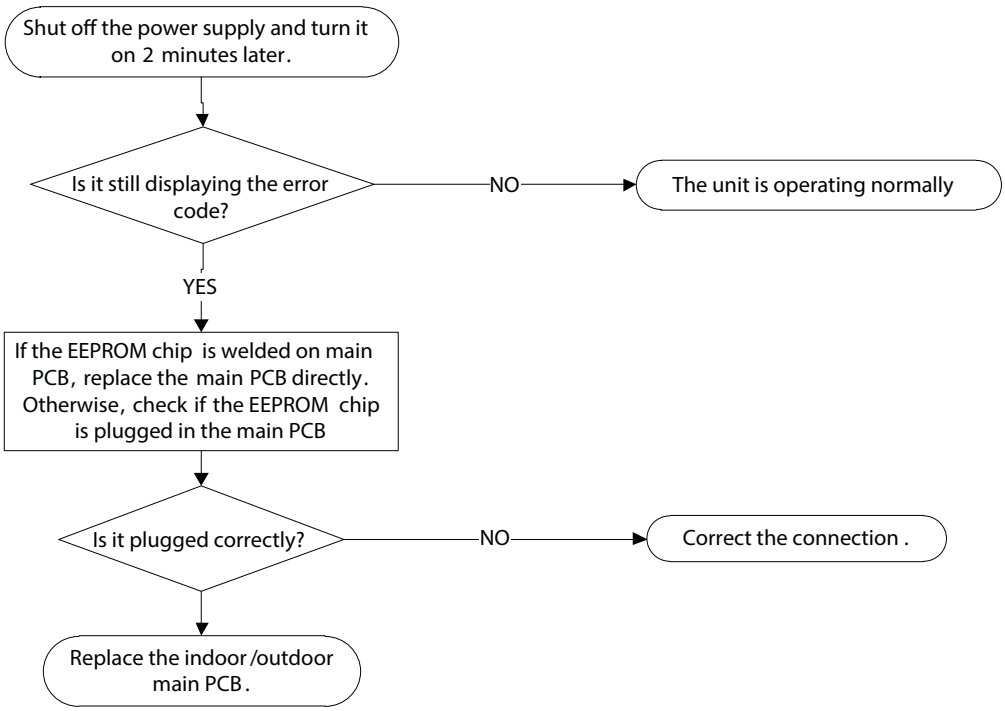

Remarks:

The location of the EEPROM chip on the indoor and outdoor PCB is shown in Figures 15 and 16:

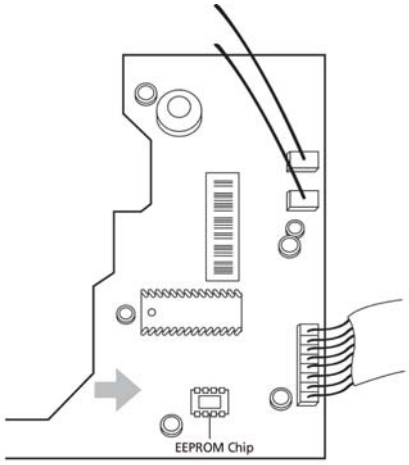

Fig. 15 – EEPROM Chip (Indoor Unit)

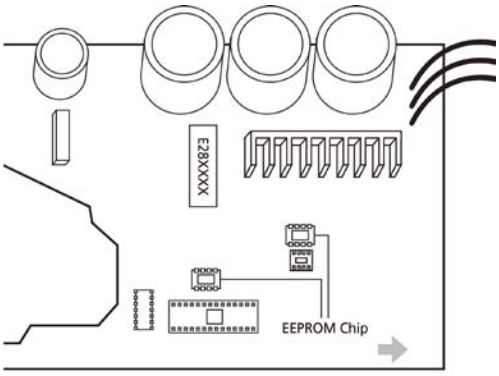

Fig. 16 – EEPROM Chip (Outdoor Unit)

NOTE: These images are for reference only.

DIAGNOSIS AND SOLUTION (CONT)

E1 (Indoor and Outdoor Unit Communication Error)

Description: The indoor unit has not received feedback from the outdoor unit for 150 seconds, four consecutive times.

Recommended parts to prepare:

- Indoor PCB
- Outdoor PCB
- Reactor

Troubleshooting and Repair:

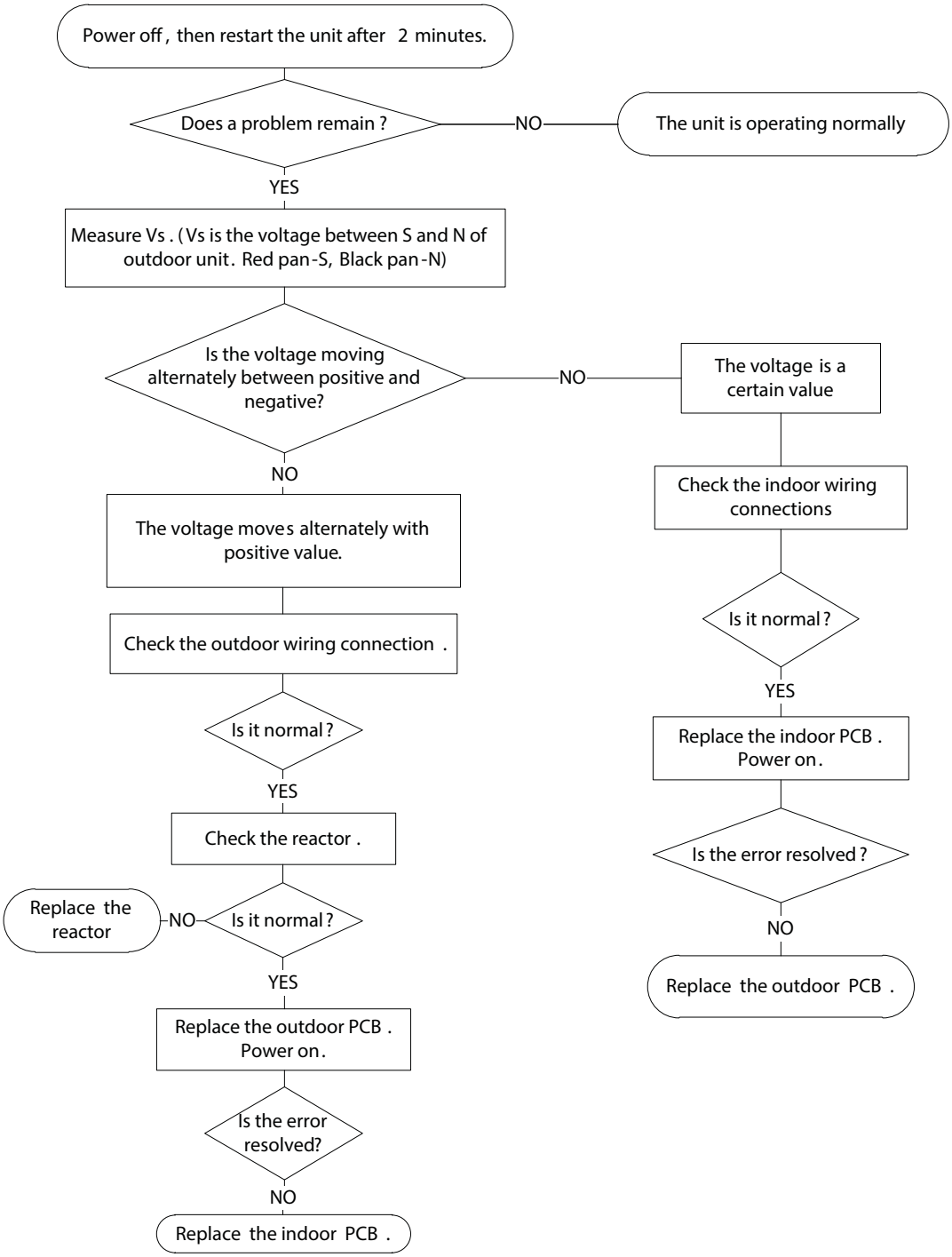

DIAGNOSIS AND SOLUTION (CONT)

E1 (Indoor and Outdoor Unit Communication Error) (Cont)

Remarks:

- Use a multimeter to test the DC voltage between the outdoor unit's 2 port and 3 port. The red pin of multimeter connects with the 2 port while the black pin is for 3 port.
- When the air conditioner is normal running, the voltage is moving alternately as positive values and negative values.
- If the outdoor unit has a malfunction, the voltage has always been the positive value.
- If the indoor unit has malfunction, the voltage is a fixed value.

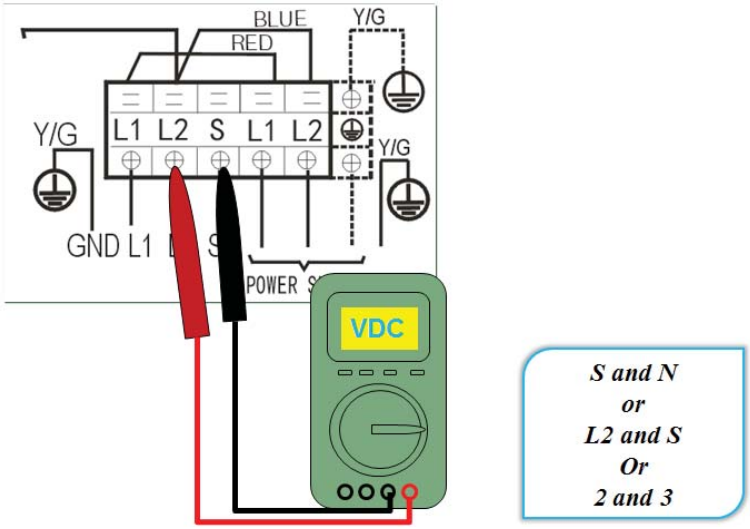

Fig. 17 – Multimeter

- Use a multimeter to test the resistance of the reactor that does not connect with the capacitor.
- The normal value should be around zero ohm. Otherwise, the reactor must have malfunction.

Fig. 18 – Multimeter

DIAGNOSIS AND SOLUTION (CONT)

E3/F5 (Fan speed is operating outside of the Normal Range)

Description: When the indoor fan speed maintains a low speed (ex. 300RPM) or a speed that's too high (ex.1500RPM) for a certain time, the unit stops and the LED displays the failure (E3). When the outdoor fan speed registers below 200RPM or over 1500RPM for an extended period of time, the unit stops and the LED displays the failure (F5).

Recommended parts to prepare:

- Wiring
- Faulty fan assembly
- Faulty fan motor
- Faulty PCB

Troubleshooting and Repair:

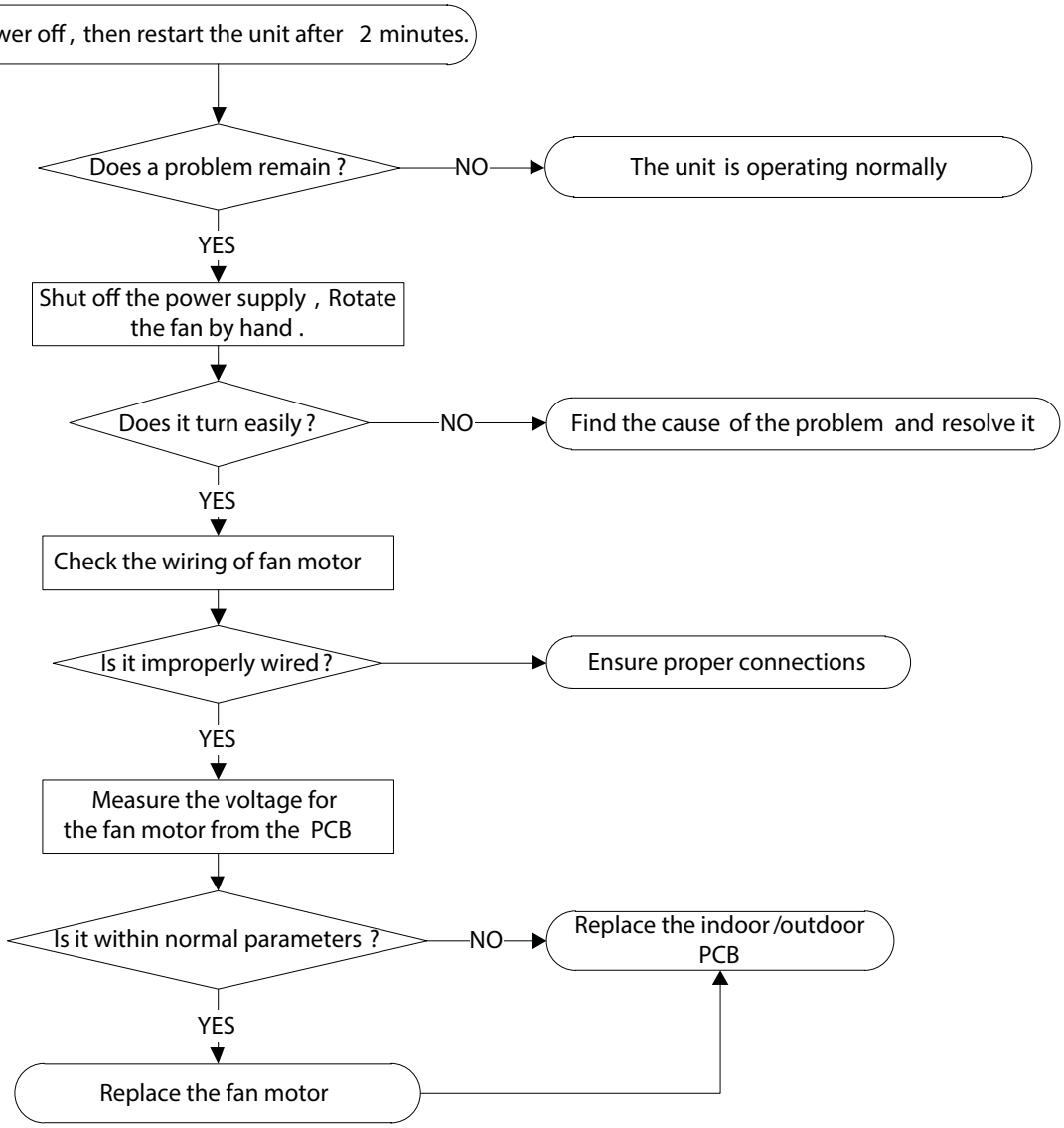

Index

1. Indoor or Outdoor DC Fan Motor (control chip is in fan motor)

   Power on and when the unit is in standby, measure the voltage of pin1−pin3, pin4−pin3 in the fan motor connector. If the value of the voltage is not in the range shown in Table 19, the PCB must has problems and need to be replaced.

- DC motor voltage input and output (voltage: 220−240V~):

Table 19—Voltage

No.	Color	Signal	Voltage
1	Red	Vs/Vm	280V~380V
2	−−−	−−−	−−−
3	Black	GND	0V
4	White	Vcc	14−18.5V
5	Yellow	Vsp	0~5.6V
6	Blue	FG	14−18.5V

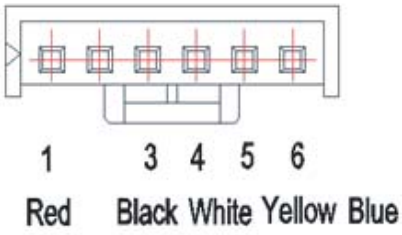

Fig. 19 – Indoor DC Fan Motor

2. Outdoor DC Fan Motor (control chip is in outdoor PCB)

   Power on and check if the fan can run normally, if the fan can run normally, the PCB must have a problem and needs to be replaced, If the fan can not run normally, measure the resistance of each pin (two). If the resistance is not equal to each other, the fan motor must have a problem and needs to be replaced, otherwise the PCB must has problems and needs to be replaced.

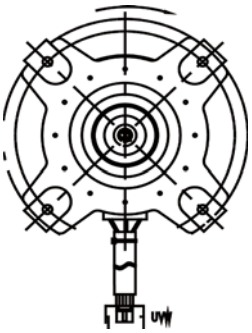

Fig. 20 – Outdoor DC Fan Motor

3. Indoor AC Fan Motor

   Power on and set the unit running in FAN mode at the high fan speed. After running for 15 seconds, measure the voltage of pin1 and pin2. If the value of the voltage is less than 100V(208~240V power supply) or 50V(115V power supply), the PCB must has problems and needs to be replaced.

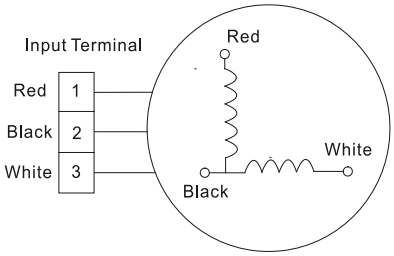

Fig. 21 – Indoor AC Fan Motor

DIAGNOSIS AND SOLUTION (CONT)

EF (Intelligent Eye Module Error Diagnosis and Solution)

Description: If the intelligent eye module malfunctions, the LED displays the failure.

Recommended parts to prepare:

- Intelligent Eye

Troubleshooting and Repair:

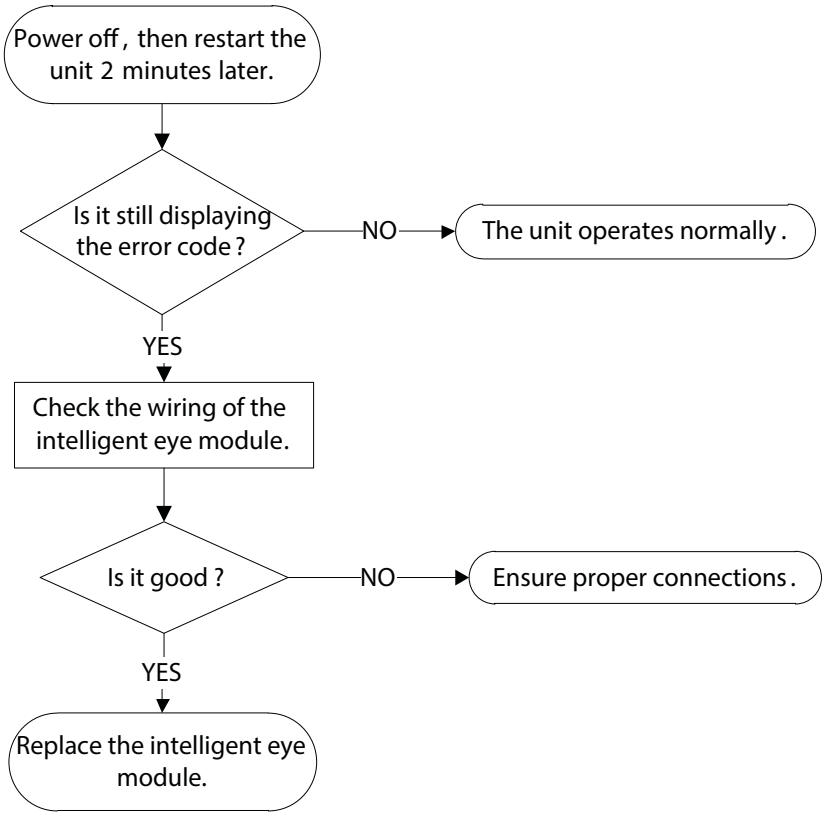

DIAGNOSIS AND SOLUTION (CONT)

P1 (Over voltage or too low voltage protection diagnosis and solution)

Description: Abnormal increases or decreases in voltage are detected by checking the specified voltage detection circuit.

Recommended parts to prepare:

- Power supply issues
- System leakage or blockage
- Faulty PCB

Troubleshooting and Repair:

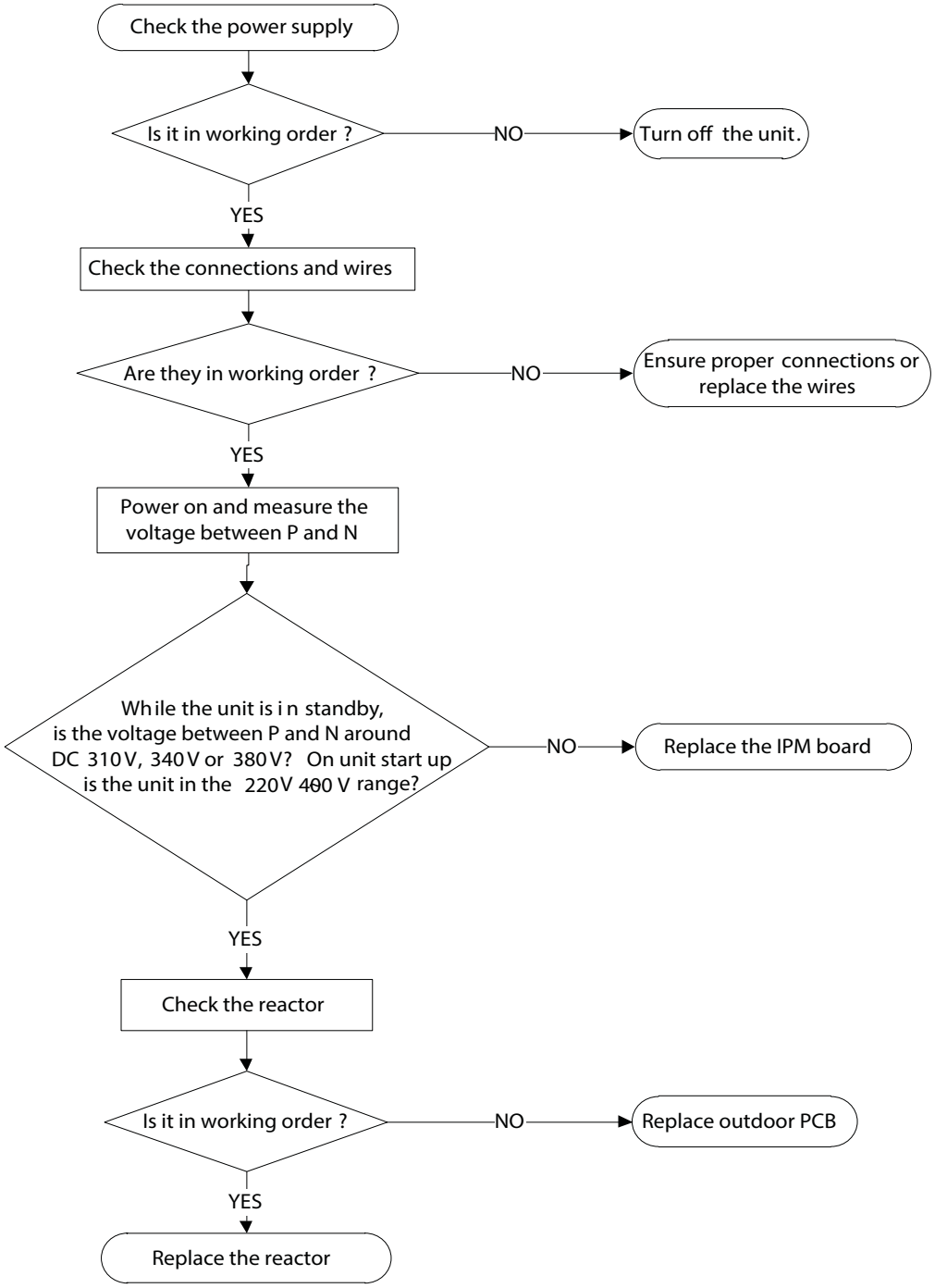

DIAGNOSIS AND SOLUTION (CONT)

P2 (High temperature protection of IPM module diagnosis and solution)

Description: If the temperature of IPM module is higher than limited value, the LED displays this failure code.

Recommended parts to prepare:

- Faulty PCB
- Connection problems

Troubleshooting and Repair:

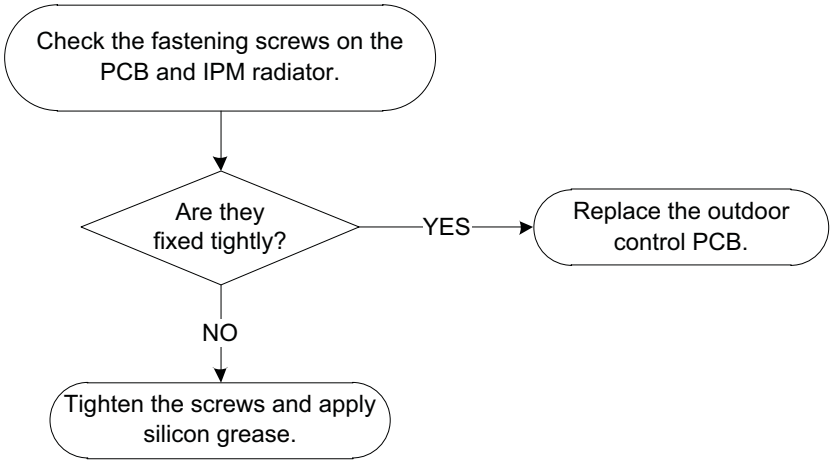

DIAGNOSIS AND SOLUTION (CONT)

P4 (Inverter compressor drive error diagnosis and solution)

Description: If the temperature of IPM module is higher than limited value, the LED displays this failure code.

Recommended parts to prepare:

- Wiring mistake
- PM malfunction
- Outdoor fan assembly faulty
- Compressor malfunction
- Outdoor PCB faulty

Troubleshooting and Repair:

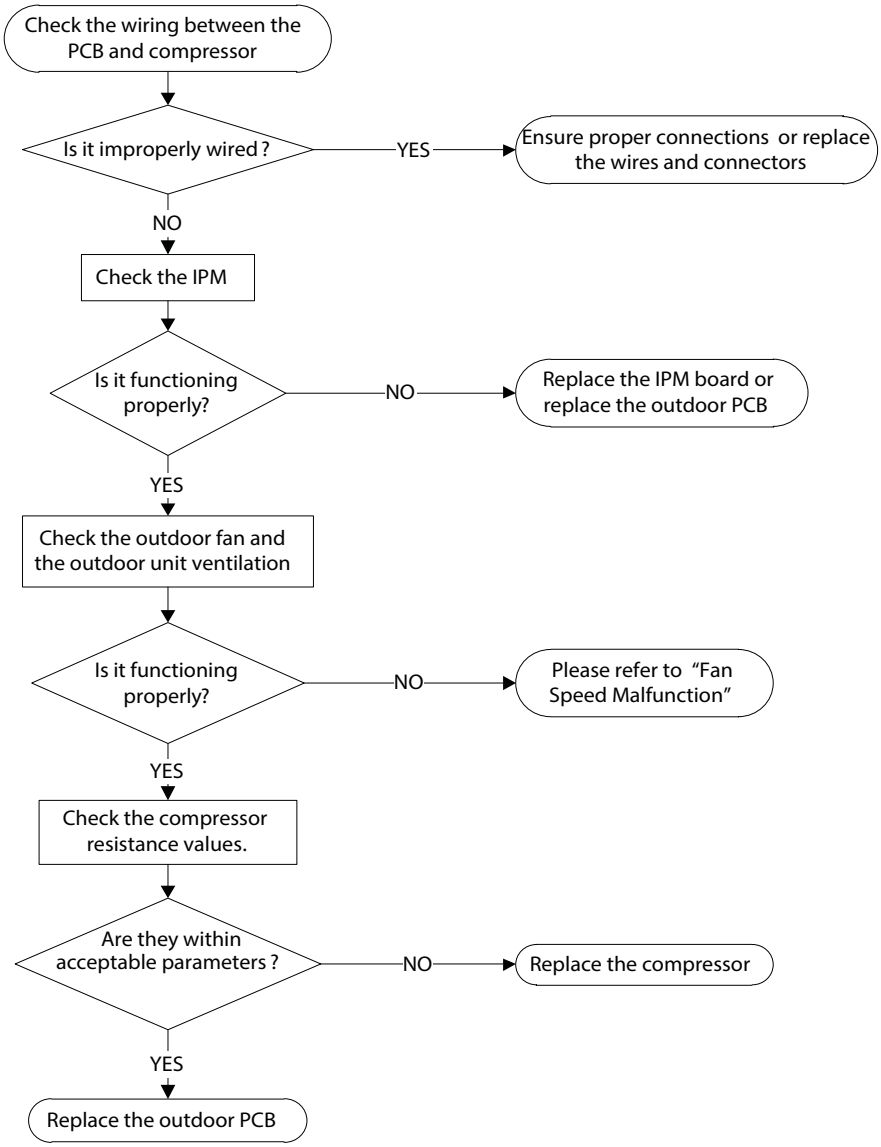

DIAGNOSIS AND SOLUTION (CONT)

E4/E5/F1/F2/F3 (Open circuit or short circuit of temperature sensor diagnosis and solution)

Description: If the sampling voltage is lower than 0.06V or higher than 4.94V, the LED displays the failure.

Recommended parts to prepare:

- Wiring mistake
- Faulty sensor
- Faulty PCB

Troubleshooting and Repair:

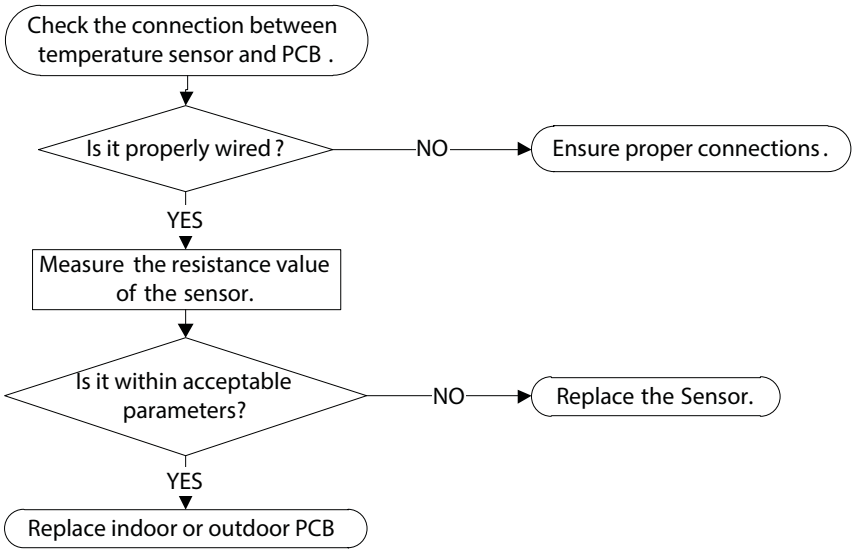

Fig. 22 – Multimeter

DIAGNOSIS AND SOLUTION (CONT)

Eb (Communication error between the Indoor PCB and Display Board)

Description: Indoor PCB does not receive feedback from the display board.

Recommended parts to prepare:

- Wiring mistake
- PCB faulty
- Display board malfunction

Troubleshooting and Repair:

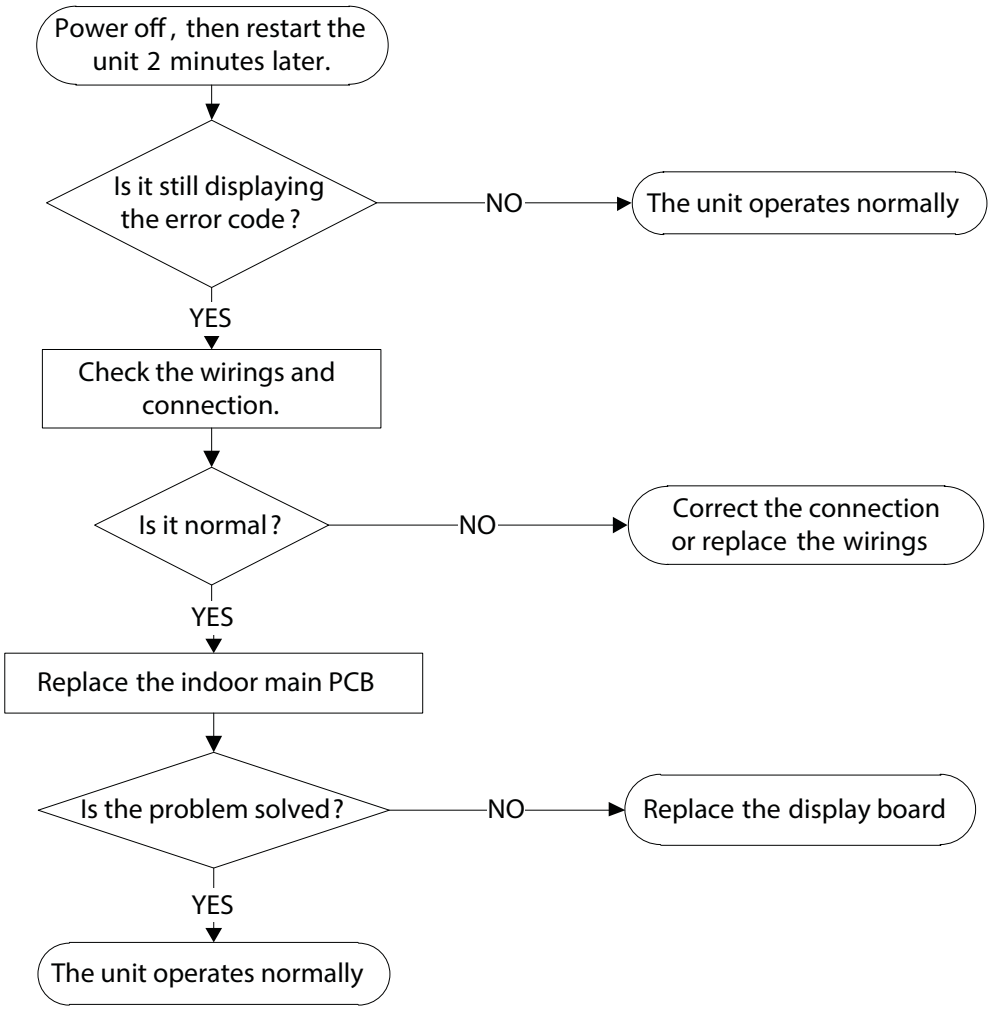

DIAGNOSIS AND SOLUTION (CONT)

F0 (Overload current protection diagnosis and solution)

Description: An abnormal current rise is detected by checking the specified current detection circuit.

Recommended parts to prepare:

- Power supply problems
- System blockage
- Faulty PCB
- Wiring mistake
- Compressor malfunction

Troubleshooting and Repair:

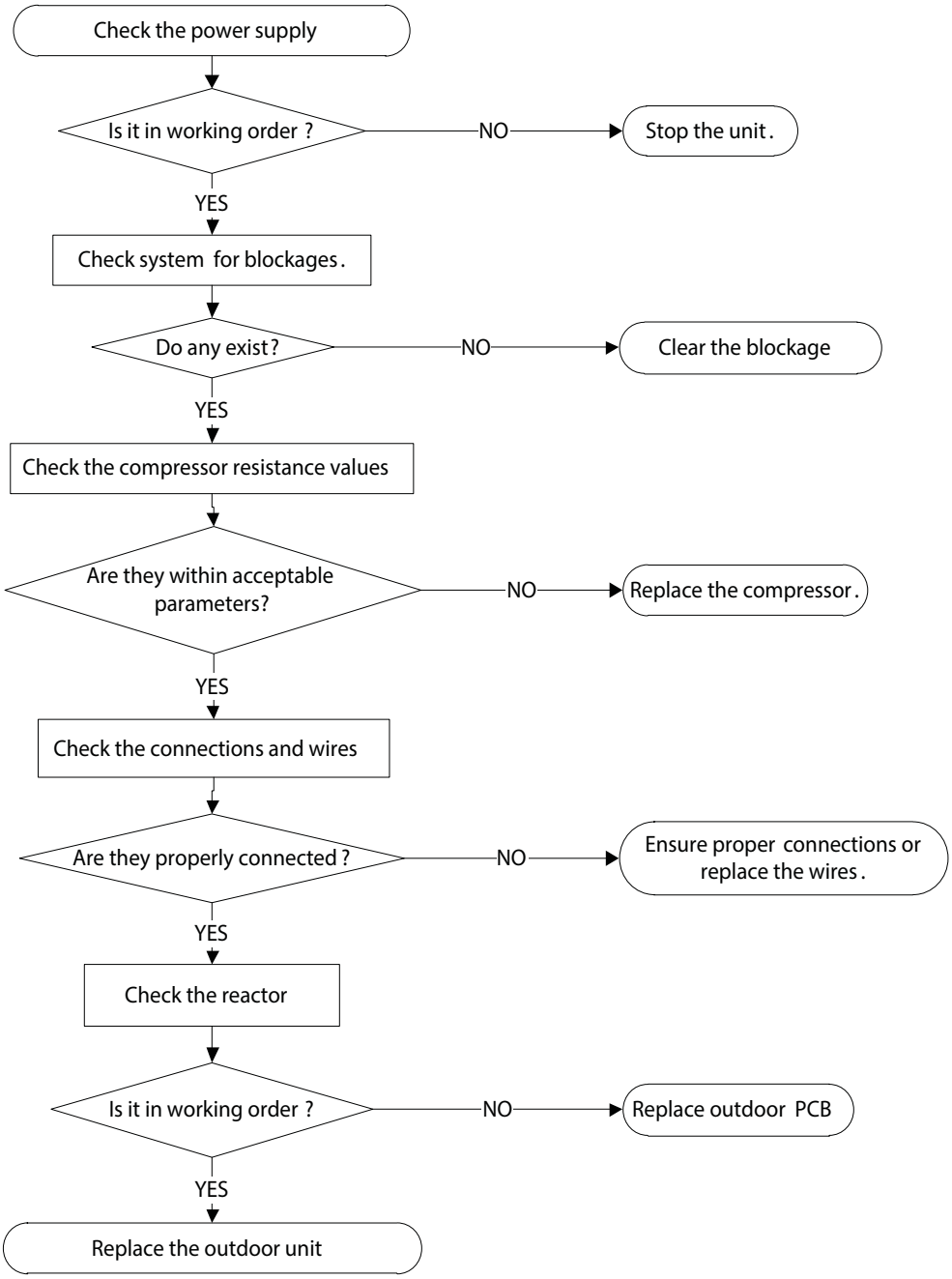

DIAGNOSIS AND SOLUTION (CONT)

P0 (IPM malfunction or IGBT over−strong current protection diagnosis and solution)

Description: When the voltage signal the IPM sends to the compressor drive chip is abnormal, the display LED displays “P0” and the air conditioner turns off.

Recommended parts to prepare:

- Wiring mistake
- IPM malfunction
- Faulty outdoor fan assembly
- Compressor malfunction
- Faulty outdoor PCB

Troubleshooting and Repair:

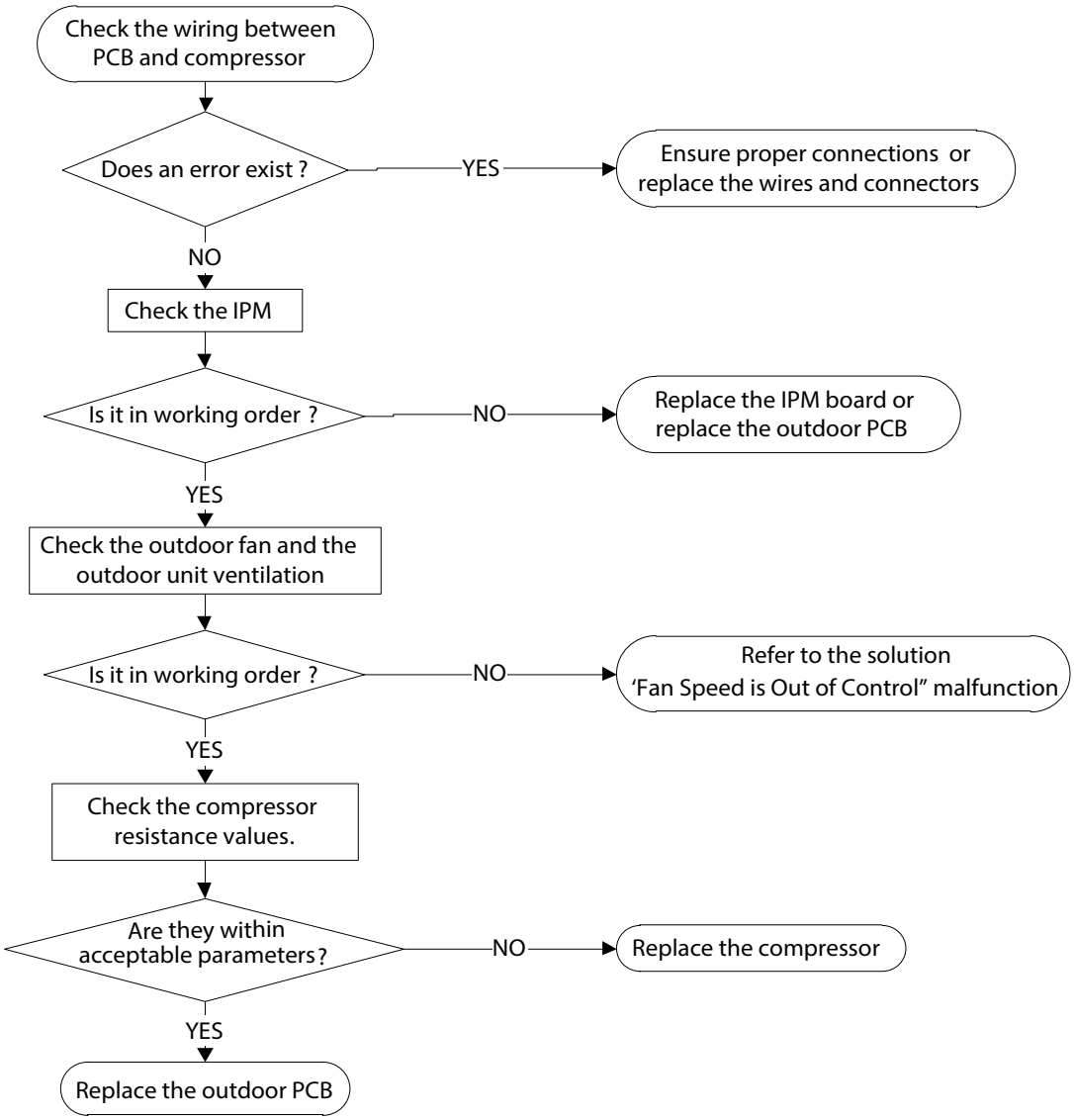

DISASSEMBLY INSTRUCTIONS

Indoor Unit (Front Panel)

Procedure	Illustration
1) Hold the front panel by the tabs on both sides and lift it (see CJ_OP_INV_001).	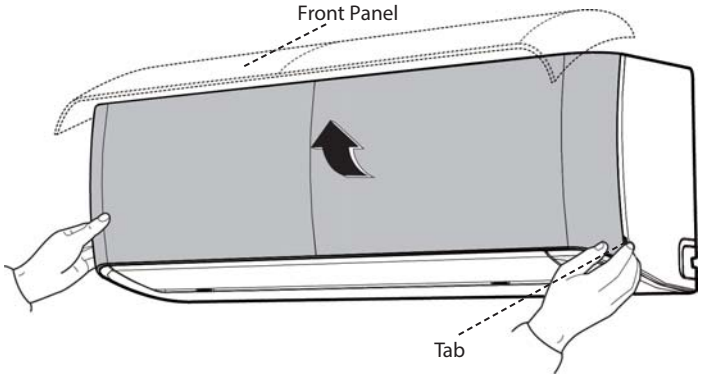 CJ_OP_INV_001
2) Push up the bottom of the air filter while pressing the buttom of the middle parts, and then pull the air filter out (downwards) (see CJ_OP_INV_002).	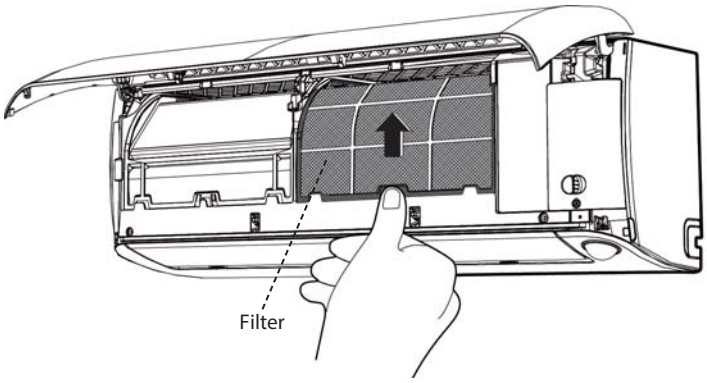 CJ_OP_INV_002

DISASSEMBLY INSTRUCTIONS (CONT)

Indoor Unit (Front Panel) (Cont)

Procedure	Illustration
3) Open the horizontal louver and push the hook towards the right to open (see CJ_OP_INV_003).	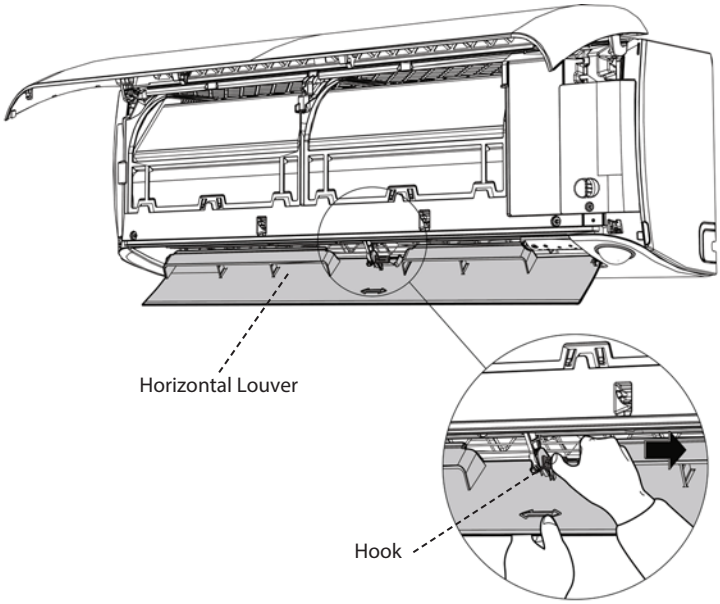 CJ_OP_INV_003
4) Bend the horizontal louver lightly with both hands to loosen the hooks, then remove the horizontal louver (see CJ_OP_INV_004).	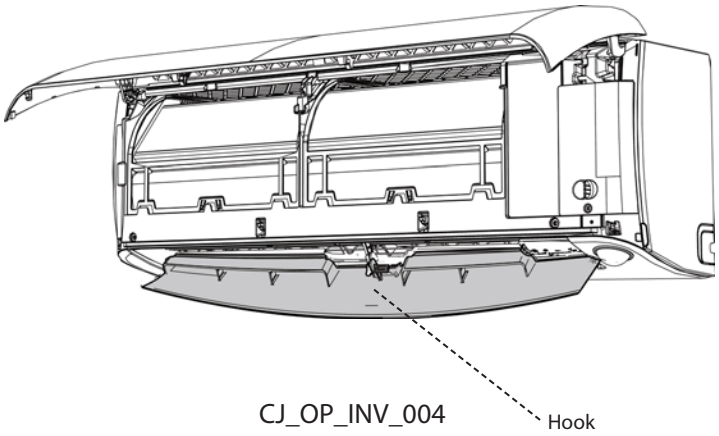 CJ_OP_INV_004

DISASSEMBLY INSTRUCTIONS (CONT)

Indoor Unit (Front Panel) (Cont)

Procedure	Illustration
5) Remove 1 screw and then remove the electrical cover (see CJ_OP_INV_005). 6) Disconnect the two connectors for the display board (see CJ_OP_INV_005) .	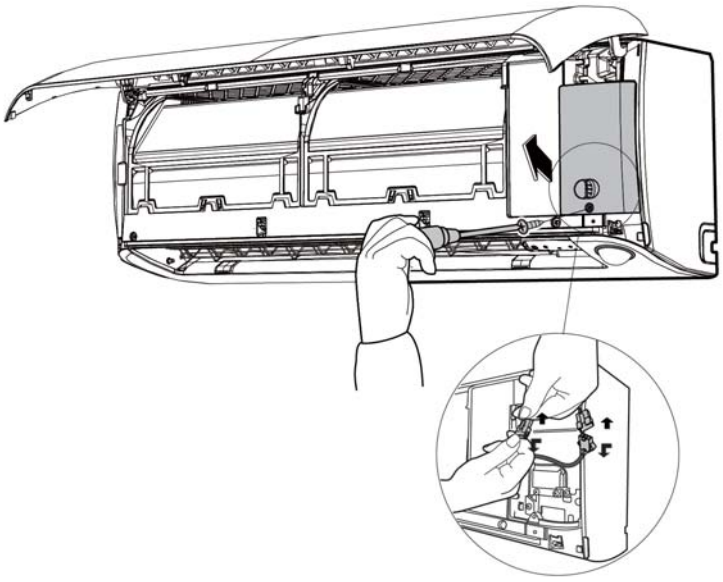 CJ_OP_INV_005
7) Slid the front panel side to side to release each axis (see CJ_OP_INV_006)	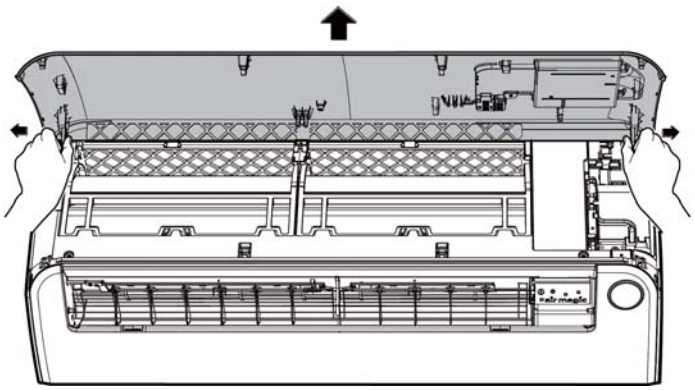 CJ_OP_INV_006
8) Remove one screw and rotate the display board clockwise. Next, remove the clips. (see CJ_OP_INV_007).	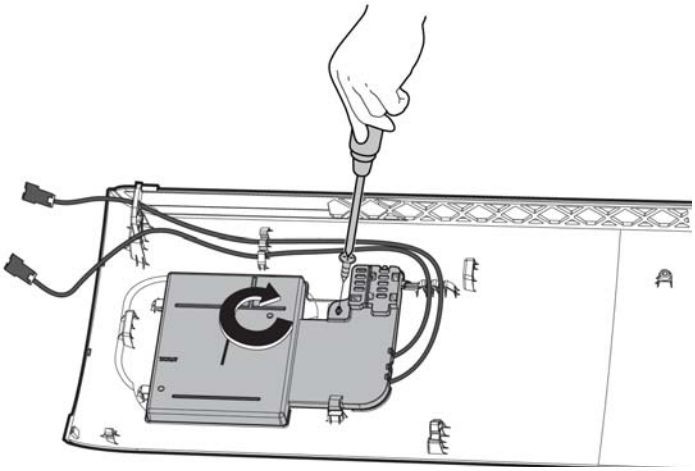 CJ_OP_INV_007

DISASSEMBLY INSTRUCTIONS (CONT)

Electrical Parts

NOTE: Remove the front panel (refer front panel removal steps) before disassembling electrical parts.

Procedure	Illustration
1) Cut the ribbon with a shear, then pull out the coil temperature sensor (T2) (see CJ_OP_INV_010). 2) Remove the two screws used for the ground connection (see CJ_OP_INV_010).	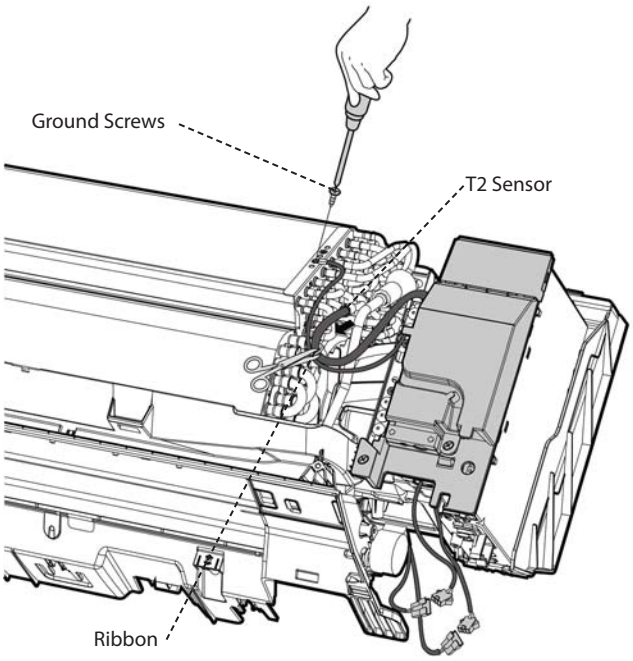 CJ_OP_INV_010
3) Remove the screws (1 for the electronic cover and 1 for the terminal cover). Next, remove the electronic box cover and the terminal cover along the direction indicated in image (on the right side) to remove it. 4) Disconnect the fan motor connector and the step motor (see CJ_OP_INV_011).	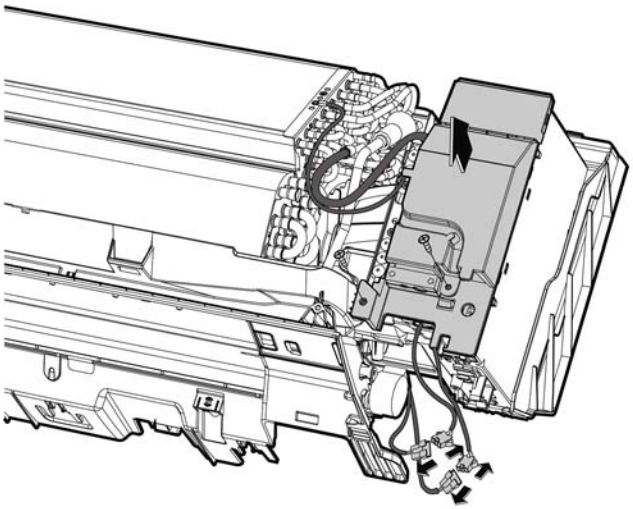 CJ_OP_INV_011

DISASSEMBLY INSTRUCTIONS (CONT)

Electrical Parts (Cont)

Procedure	Illustration
5) Disconnect the wires. Then remove the electronic main box (CJ_OP_INV_011-2). 6) Pull out the Electrical control box along the direction indicated in the image. to remove it (CJ_OP_INV_011-2).	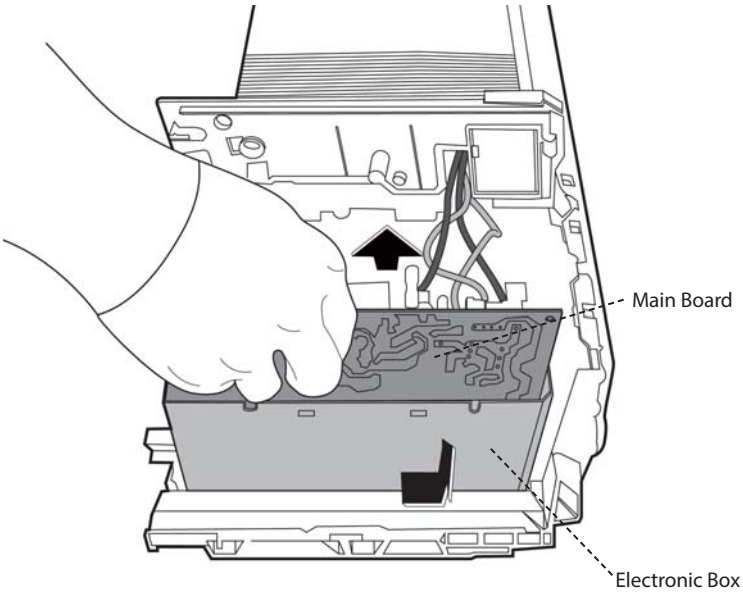 CJ_OP_INV_012
7) The connector of each port is indicated in right image. (CJ_OP_INV_013).	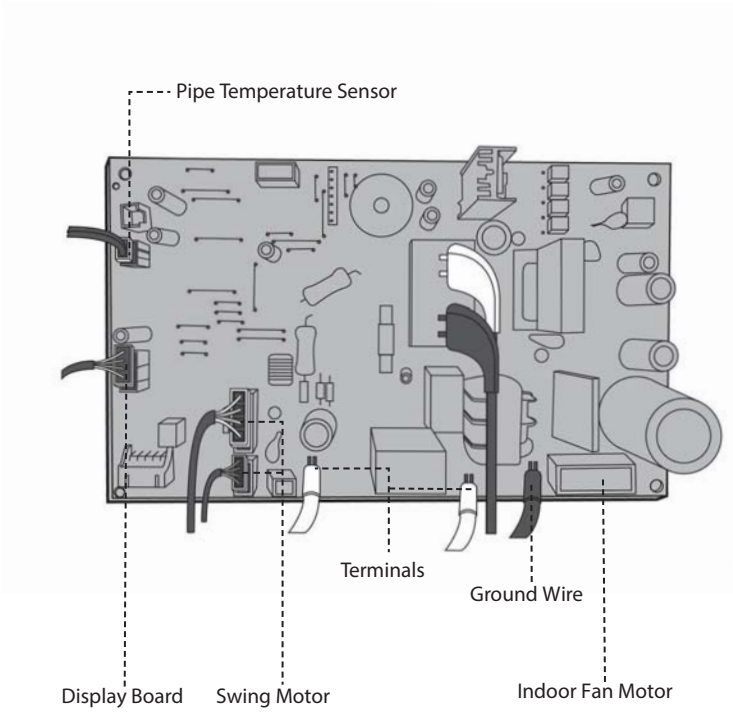 CJ_OP_INV_013

DISASSEMBLY INSTRUCTIONS (CONT)

Evaporator

NOTE: Remove the front panel and electrical parts (refer to front panel and electrical parts removal steps) before disassembling evaporator.

Procedure	Illustration
1) Disassemble the pipe holder located at the rear of the unit (see CJ_OP_INV_014).	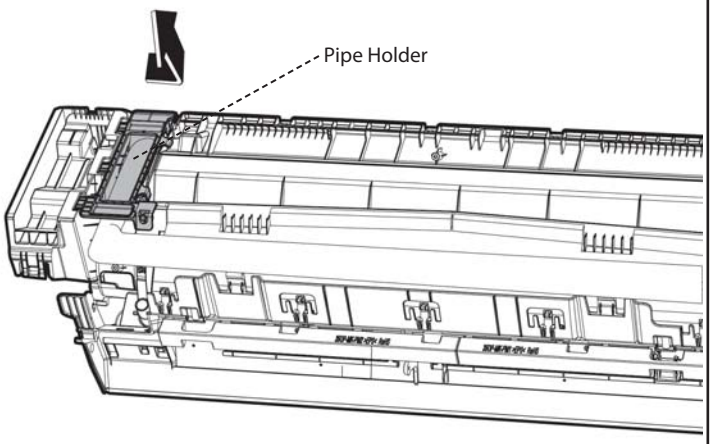 CJ_OP_INV_014
2) Remove the 3 screws on the evaporator located on the fixed plate (see CJ_OP_INV_015).	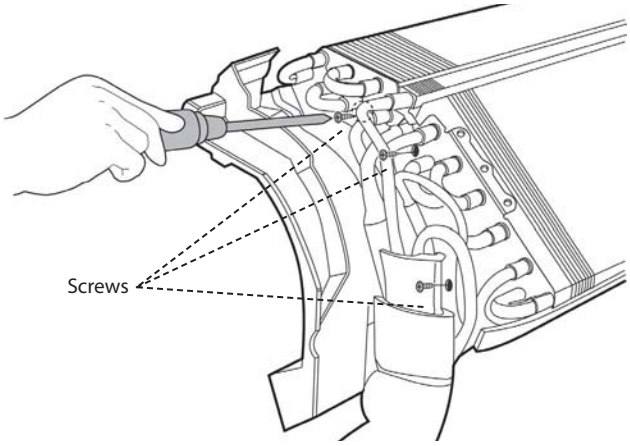 CJ_OP_INV_015
3) Remove the 2 screws on the evaporator located at the base of the bearing side (see CJ_OP_INV_016).	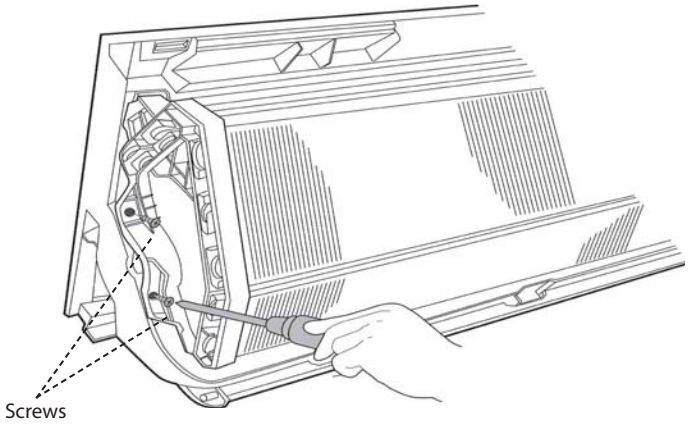 CJ_OP_INV_016

DISASSEMBLY INSTRUCTIONS (CONT)

Evaporator (Cont)

Procedure	Illustration
4) Remove 1 screw on the evaporator located at the top of the evaporator. (see CJ_OP_INV_017).	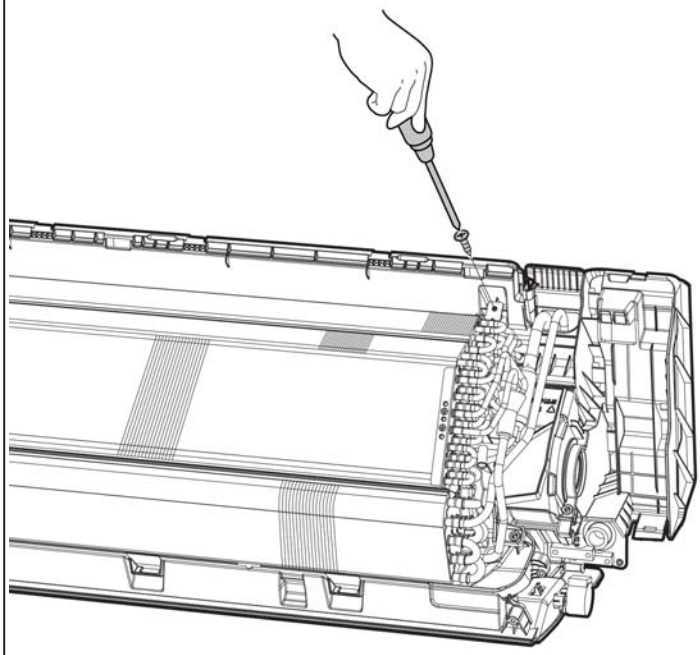 CJ_OP_INV_017
5) Pull out the evaporator (see CJ_OP_INV_017).	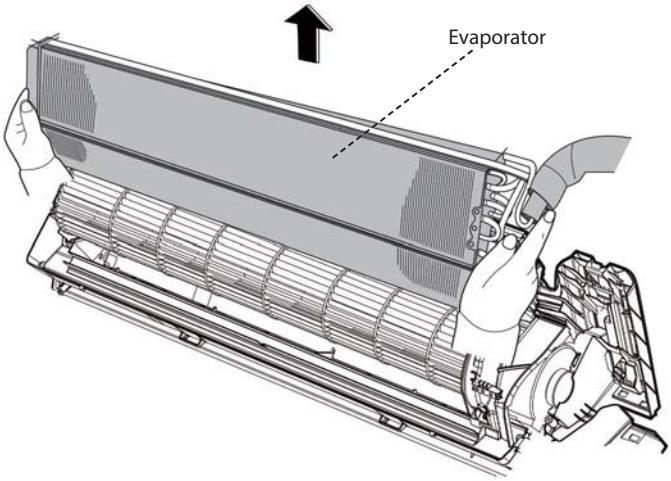 CJ_OP_INV_017

DISASSEMBLY INSTRUCTIONS (CONT)

Fan Motor and Fan

NOTE: Remove the front panel, electrical parts and evaporator (refer to front panel, electrical parts, and evaporator removal steps) before disassembling fan motor and fan.

Procedure	Illustration
1) Remove the two screws and remove the fixing board of the fan motor (see CJ_OP_INV_018).	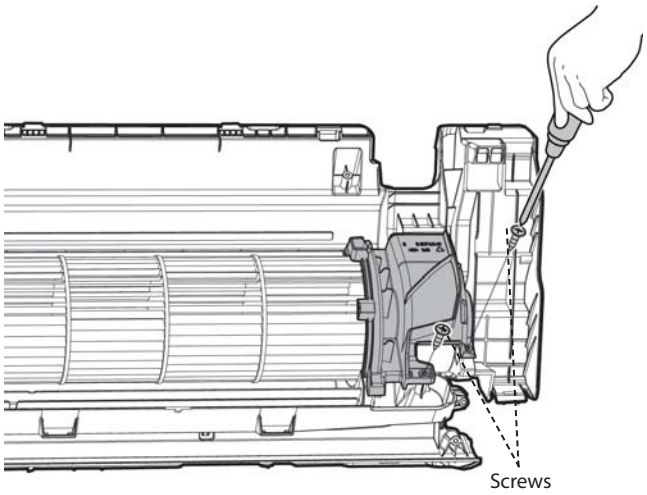 CJ_OP_INV_018
2) Remove the bearing sleeve (see CJ_OP_INV_019).	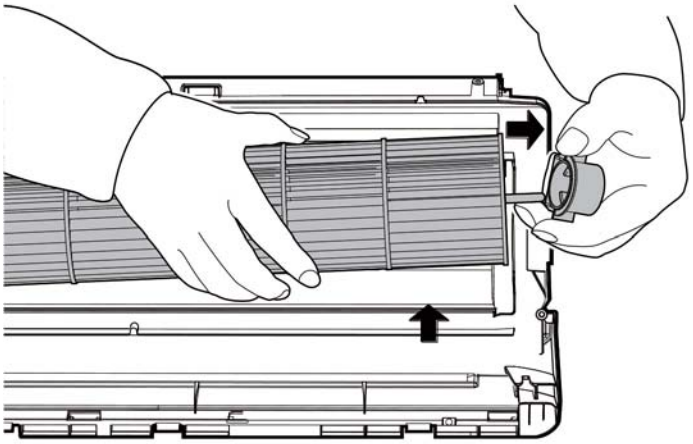 CJ_OP_INV_019

DISASSEMBLY INSTRUCTIONS (CONT)

Fan Motor and Fan (Cont)

Procedure	Illustration
3) Remove the fixing screw (see CJ_OP_INV_020). 4) Pull out the fan motor and fan assembly from the side.	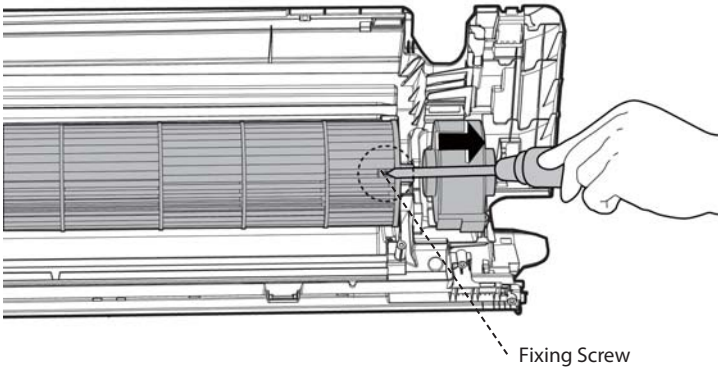 CJ_OP_INV_021

Step Motor

NOTE: Remove the front panel and electrical parts (refer to the front panel, electrical parts removal steps) before disassembling step motor.

Procedure	Illustration
1) Remove the two screws, then remove the stepping motor (see CJ_OP_INV_021).	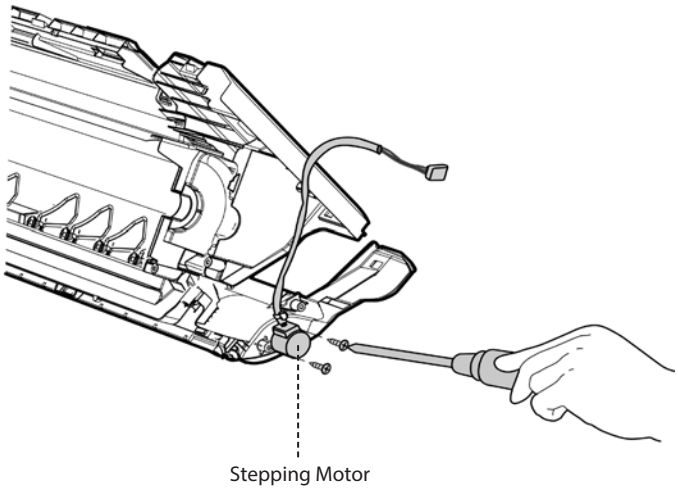 CJ_OP_INV_021

DISASSEMBLY INSTRUCTIONS (CONT)

Intelligent Eye

NOTE: Remove the front panel and electrical parts (refer to the front panel, electrical parts, evaporator and fan motor and fan removal steps) before disassembling the step motor.

Procedure	Illustration
1) Remove the 1 screw, then remove the intelligent eye. (see CJ_OP_INV_021).	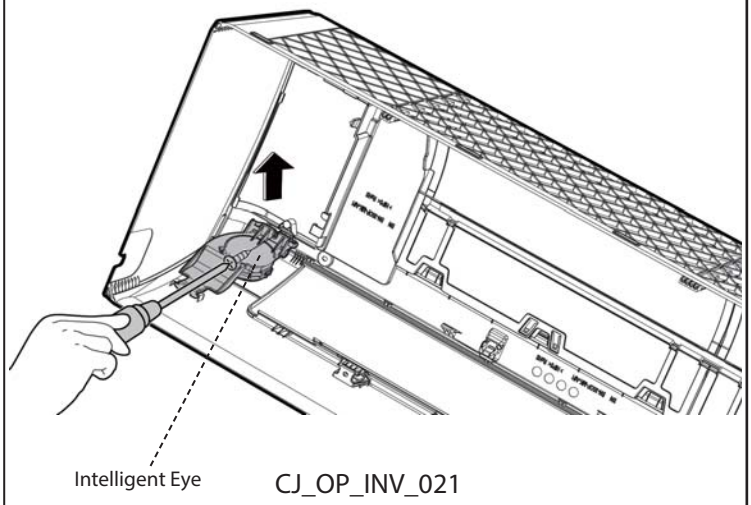 CJ_OP_INV_021

APPENDICES

Appendix 1

Table 20—Temperature Sensor Resistance Value Table for T1, T2, T3, T4 (°C−−K)

°C	°F	K Ohm	°C	°F	K Ohm	°C	°F	K Ohm	°C	°F	K Ohm
−20	−4	115.266	20	68	12.6431	60	140	2.35774	100	212	0.62973
−19	−2	108.146	21	70	12.0561	61	142	2.27249	101	214	0.61148
−18	0	101.517	22	72	11.5	62	144	2.19073	102	216	0.59386
−17	1	96.3423	23	73	10.9731	63	145	2.11241	103	217	0.57683
−16	3	89.5865	24	75	10.4736	64	147	2.03732	104	219	0.56038
−15	5	84.219	25	77	10	65	149	1.96532	105	221	0.54448
−14	7	79.311	26	79	9.55074	66	151	1.89627	106	223	0.52912
−13	9	74.536	27	81	9.12445	67	153	1.83003	107	225	0.51426
−12	10	70.1698	28	82	8.71983	68	154	1.76647	108	226	0.49989
−11	12	66.0898	29	84	8.33566	69	156	1.70547	109	228	0.486
−10	14	62.2756	30	86	7.97078	70	158	1.64691	110	230	0.47256
−9	16	58.7079	31	88	7.62411	71	160	1.59068	111	232	0.45957
−8	18	56.3694	32	90	7.29464	72	162	1.53668	112	234	0.44699
−7	19	52.2438	33	91	6.98142	73	163	1.48481	113	235	0.43482
−6	21	49.3161	34	93	6.68355	74	165	1.43498	114	237	0.42304
−5	23	46.5725	35	95	6.40021	75	167	1.38703	115	239	0.41164
−4	25	44	36	97	6.13059	76	169	1.34105	116	241	0.4006
−3	27	41.5878	37	99	5.87359	77	171	1.29078	117	243	0.38991
−2	28	39.8239	38	100	5.62961	78	172	1.25423	118	244	0.37956
−1	30	37.1988	39	102	5.39689	79	174	1.2133	119	246	0.36954
0	32	35.2024	40	104	5.17519	80	176	1.17393	120	248	0.35982
1	34	33.3269	41	106	4.96392	81	178	1.13604	121	250	0.35042
2	36	31.5635	42	108	4.76253	82	180	1.09958	122	252	0.3413
3	37	29.9058	43	109	4.5705	83	181	1.06448	123	253	0.33246
4	39	28.3459	44	111	4.38736	84	183	1.03069	124	255	0.3239
5	41	26.8778	45	113	4.21263	85	185	0.99815	125	257	0.31559
6	43	25.4954	46	115	4.04589	86	187	0.96681	126	259	0.30754
7	45	24.1932	47	117	3.88673	87	189	0.93662	127	261	0.29974
8	46	22.5662	48	118	3.73476	88	190	0.90753	128	262	0.29216
9	48	21.8094	49	120	3.58962	89	192	0.8795	129	264	0.28482
10	50	20.7184	50	122	3.45097	90	194	0.85248	130	266	0.2777
11	52	19.6891	51	124	3.31847	91	196	0.82643	131	268	0.27078
12	54	18.7177	52	126	3.19183	92	198	0.80132	132	270	0.26408
13	55	17.8005	53	127	3.07075	93	199	0.77709	133	271	0.25757
14	57	16.9341	54	129	2.95896	94	201	0.75373	134	273	0.25125
15	59	16.1156	55	131	2.84421	95	203	0.73119	135	275	0.24512
16	61	15.3418	56	133	2.73823	96	205	0.70944	136	277	0.23916
17	63	14.6181	57	135	2.63682	97	207	0.68844	137	279	0.23338
18	64	13.918	58	136	2.53973	98	208	0.66818	138	280	0.22776
19	66	13.2631	59	138	2.44677	99	210	0.64862	139	282	0.22231

APPENDICES (CONT)

Appendix 2

Table 21—Temperature Sensor Resistance Value Table for T5 (TP) (°C−−K)

°C	°F	K Ohm	°C	°F	K Ohm	°C	°F	K Ohm	°C	°F	K Ohm
−20	−4	542.7	20	68	68.66	60	140	13.59	100	212	3.702
−19	−2	511.9	21	70	65.62	61	142	13.11	101	214	3.595
−18	0	483	22	72	62.73	62	144	12.65	102	216	3.492
−17	1	455.9	23	73	59.98	63	145	12.21	103	217	3.392
−16	3	430.5	24	75	57.37	64	147	11.79	104	219	3.296
−15	5	406.7	25	77	54.89	65	149	11.38	105	221	3.203
−14	7	384.3	26	79	52.53	66	151	10.99	106	223	3.113
−13	9	363.3	27	81	50.28	67	153	10.61	107	225	3.025
−12	10	343.6	28	82	48.14	68	154	10.25	108	226	2.941
−11	12	325.1	29	84	46.11	69	156	9.902	109	228	2.86
−10	14	307.7	30	86	44.17	70	158	9.569	110	230	2.781
−9	16	291.3	31	88	42.33	71	160	9.248	111	232	2.704
−8	18	275.9	32	90	40.57	72	162	8.94	112	234	2.63
−7	19	261.4	33	91	38.89	73	163	8.643	113	235	2.559
−6	21	247.8	34	93	37.3	74	165	8.358	114	237	2.489
−5	23	234.9	35	95	35.78	75	167	8.084	115	239	2.422
−4	25	222.8	36	97	34.32	76	169	7.82	116	241	2.357
−3	27	211.4	37	99	32.94	77	171	7.566	117	243	2.294
−2	28	200.7	38	100	31.62	78	172	7.321	118	244	2.233
−1	30	190.5	39	102	30.36	79	174	7.086	119	246	2.174
0	32	180.9	40	104	29.15	80	176	6.859	120	248	2.117
1	34	171.9	41	106	28	81	178	6.641	121	250	2.061
2	36	163.3	42	108	26.9	82	180	6.43	122	252	2.007
3	37	155.2	43	109	25.86	83	181	6.228	123	253	1.955
4	39	147.6	44	111	24.85	84	183	6.033	124	255	1.905
5	41	140.4	45	113	23.89	85	185	5.844	125	257	1.856
6	43	133.5	46	115	22.89	86	187	5.663	126	259	1.808
7	45	127.1	47	117	22.1	87	189	5.488	127	261	1.762
8	46	121	48	118	21.26	88	190	5.32	128	262	1.717
9	48	115.2	49	120	20.46	89	192	5.157	129	264	1.674
10	50	109.8	50	122	19.69	90	194	5	130	266	1.632
11	52	104.6	51	124	18.96	91	196	4.849			
12	54	99.69	52	126	18.26	92	198	4.703			
13	55	95.05	53	127	17.58	93	199	4.562			
14	57	90.66	54	129	16.94	94	201	4.426			
15	59	86.49	55	131	16.32	95	203	4.294			
16	61	82.54	56	133	15.73	96	205	4.167			
17	63	78.79	57	135	15.16	97	207	4.045			
18	64	75.24	58	136	14.62	98	208	3.927			
19	66	71.86	59	138	14.09	99	210	3.812			

Appendix 3

Table 22—Celsius to Fahrenheit Conversion

°C	°F	°C	°F	°C	°F	°C	°F	°C	°F
–5	23	21	69.8	51	123.8	82	179.6	113	235.4
–4	24.8	22	71.6	52	125.6	83	181.4	114	237.2
–3	26.6	23	73.4	53	127.4	84	183.2	115	239
–2	28.4	24	75.2	54	129.2	85	185	116	240.8
–1	30.2	25	77	55	131	86	186.8	117	242.6
0	32	25.5	77.9	56	132.8	87	188.6	118	244.4
0.5	32.9	26	78.8	57	134.6	88	190.4	119	246.2
1	33.8	27	80.6	58	136.4	89	192.2	120	248
1.5	34.7	28	82.4	59	138.2	90	194	121	249.8
2	35.6	29	84.2	60	140	91	195.8	122	251.6
2.5	36.5	30	86	61	141.8	92	197.6	123	253.4
3	37.4	31	87.8	62	143.6	93	199.4	124	255.2
3.5	38.3	32	89.6	63	145.4	94	201.2	125	257
4	39.2	33	91.4	64	147.2	95	203	126	258.8
4.5	40.1	34	93.2	65	149	96	204.8	127	260.6
5	41	35	95	66	150.8	97	206.6	128	262.4
6	42.8	36	96.8	67	152.6	98	208.4	129	264.2
7	44.6	37	98.6	68	154.4	99	210.2	130	266
8	46.4	38	100.4	69	156.2	100	212	131	267.8
9	48.2	39	102.2	70	158	101	213.8	132	269.6
10	50	40	104	71	159.8	102	215.6	133	271.4
11	51.8	41	105.8	72	161.6	103	217.4	134	273.2
12	53.6	42	107.6	73	163.4	104	219.2	135	275
13	55.4	43	109.4	74	165.2	105	221	136	276.8
14	57.2	44	111.2	75	167	106	222.8	137	278.6
15	59	45	113	76	168.8	107	224.6	138	280.4
16	60.8	46	114.8	77	170.6	108	226.4	139	282.2
17	62.6	47	116.6	78	172.4	109	228.2	140	284
18	64.4	48	118.4	79	174.2	110	230	141	285.8
19	66.2	49	120.2	80	176	111	231.8	142	287.6
20	68	50	122	81	177.8	112	233.6	143	289.4

©2018 Bryant Heating & Cooling Systems • 7310 W. Morris St. • Indianapolis, IN 46231
Edition Date: 07/18

Catalog No. SM619PHA–02

Manufacturer reserves the right to discontinue, or change at any time, specifications or designs without notice and without incurring obligations.
Replaces: SM619PHA–01