38MVRA
Outdoor Unit Single Zone Ductless System
Sizes 09 to 24

Product Data

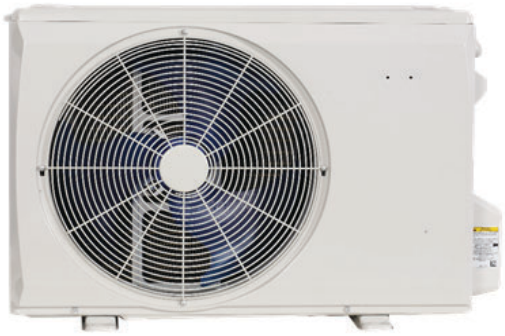

Fig. 1 — Sizes 09K - 24K

NOTE: Images are for illustration purposes **only**. Actual models may differ slightly.

TABLE OF CONTENTS

	PAGE
INDUSTRY LEADING FEATURES / BENEFITS	1
MODEL NUMBER NOMENCLATURE	3
STANDARD FEATURES AND ACCESSORIES	4
DIMENSIONS	5
CLEARANCES	7
APPLICATION DATA	8
SPECIFICATIONS	9
COMPATIBILITY	9
PERFORMANCE	10
ELECTRICAL DATA	12
FAN AND MOTOR SPECIFICATIONS	12
COOLING PERFORMANCE DATA (HEAT PUMP)	13
HEATING PERFORMANCE DATA (HEAT PUMP)	15
WIRING	17
WIRING DIAGRAMS	18
GUIDE SPECIFICATIONS	21

INDUSTRY LEADING FEATURES / BENEFITS

A PERFECT BALANCE BETWEEN BUDGET LIMITS, ENERGY SAVINGS AND COMFORT.

The **38MVRA** series ductless systems are a matched combination of an outdoor condensing unit and an indoor fan coil unit connected only by refrigerant tubing and wires.

The ductless system permits creative solutions to design problems such as:

- Add-ons to current space (an office or family room addition)
- Special space requirements
- When changes in the load cannot be handled by the existing system
- When adding air conditioning to spaces that are heated by hydronic or electric heat and have no ductwork
- Historical renovations or any application where preserving the look of the original structure is essential.

The ideal compliment to your ducted system when it is impractical or prohibitively expensive to use ductwork.

The compact indoor fan coil units take up very little space in the room and do not obstruct windows. The fan coils are attractively styled to blend with most room decors. Advanced system components incorporate innovative technology to provide reliable cooling performance at low sound levels.

Inverter Technology

The inverter driven compressor is designed to run at various input power frequencies (Hz) which controls the compressor's motor speed.

Even Temperature – The control package, including the inverter, monitors the outdoor and indoor temperatures as they relate to the selected indoor set point and adjusts the compressor speed to match the load and keep the system operating continuously rather than cycling and creating temperature swings. This translates to higher comfort levels for the occupants.

Rapid Pull Down/Warm-Up – Comfort is increased by the inverter system's ability to ramp up the compressor speed enabling the system to reach the user selected room temperature set point quicker.

Humidity Control – Running the system for longer periods and continuously varying the compressor speed enhances the humidity control.

Individual Room Comfort

Maximum comfort is provided because each space can be controlled individually based on the usage pattern.

Low Sound Levels

When noise is a concern, ductless systems are the answer. The indoor units are whisper quiet. There are no compressors indoors, either in the conditioned space or directly over it, and there is none of the noise usually generated by air being forced through the ductwork.

When sound ordinances and proximity to neighbors demand quiet operation, the **38MVRA** unit is the right choice. With the inverter technology, these units run at lower speeds most of the time resulting in reduced sound levels.

Inverter Technology – Enhanced Economical Operation

Ductless systems are inherently economical to operate. Individual rooms are heated or cooled only when required, and since the air is delivered directly to the space, there is no need to use additional energy to move the air in the ductwork. This economical operation is enhanced further when the inverter system output matches the load resulting in a more efficient system.

Easy-To-Use Controls

The systems have microprocessor-based controls to provide the ultimate in comfort and efficiency. The user friendly wired and wireless remote controls provide the interface between the user and the unit.

Secure Operation

If security is an issue, outdoor and indoor units are connected only by refrigerant piping and wiring to prevent intruders from crawling through ductwork or wall openings. In addition, since the **38MVRA** can be installed close to an outside wall, coils are protected from vandals and severe weather.

Fast Installation

This compact ductless system is simple to install. Only wires and piping need to run between the indoor and outdoor units. These units are fast and easy to install ensuring minimal disruption to customers in homes or the workplace. This makes the **38MVRA** systems the equipment of choice for retrofit applications.

Simple Servicing and Maintenance

Removing the top panel of the outdoor unit provides immediate access to the control compartment, providing the service technician access to the diagnostic LEDs to facilitate the troubleshooting process. In addition, the draw-thru design of the outdoor unit means that dirt accumulates on the outside surface of the coil. Coils can be cleaned quickly from the inside using a pressure hose and detergent.

On the indoor units, service and maintenance expense is reduced due to the permanent easy to clean filters. Also, error codes are displayed on the front panel to alert the user to certain system malfunctions.

Built-in Reliability

Ductless system indoor and outdoor units are designed to provide years of trouble-free operation. Both the indoor and outdoor units are well protected. Whenever the microprocessor detects abnormal conditions, the unit stops and an error code appears.

Inverter systems provide additional reliability due to the soft start. This refers to the ability of the inverter to start the compressor motor using reduced voltage and reduced current. This feature is beneficial from an electrical standpoint (eliminates current spikes) as well as an overall reliability standpoint due to reduced stress on all associated system components.

Agency Listings

All systems are listed with AHRI (Air conditioning, Heating, and Refrigeration Institute) and are UL certified.

Manufacturer reserves the right to change, at any time, specifications and designs without notice and without obligations.

MODEL NUMBER NOMENCLATURE

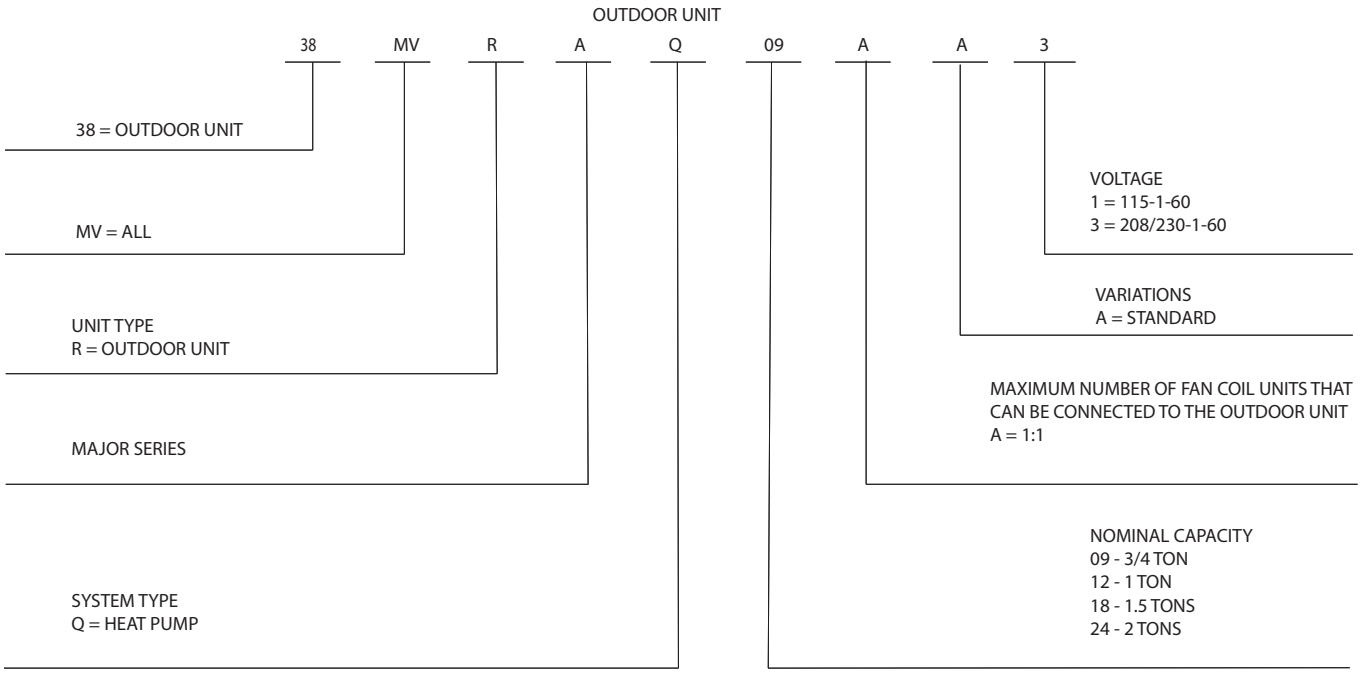

Use of the AHRI Certified TM Mark indicates a manufacturer's participation in the program For verification of certification for individual products, go to www.ahridirectory.org.

STANDARD FEATURES AND ACCESSORIES

Ease Of Installation	
Low Voltage Controls	S
Comfort Features	
Microprocessor Controls	S
Auto Restart Function	S
Auto Changeover	S
Energy Saving Features	
Inverter Driven Compressor	S
46° F Heating Mode (Heating Setback)	S
Safety And Reliability	
3 Minute Time Delay For Compressor	S
High Compressor Discharge Temperature	S
Low Voltage Protection	S
Compressor Overload Protection	S
Compressor Over Current Protection	S
IPM Module Protection	S
Condenser High Temp Protection in Cooling Mode	S
Aluminum Hydrophilic pre-coated fins	S
Ease Of Service And Maintenance	
Diagnostics	S
Liquid Line Pressure Taps	S
Application Flexibility	
Crankcase Heater	S
Base pan Heater on Heat Pump units only	S

Legend

S - Standard
A - Accessory

Accessories

Outdoor Unit Model Number	Base Pan Base Rubber Plugs RCD Part No.	Quantity per Unit
38MVRAQ09AA1	12600801A00077	32
38MVRAQ12AA1		
38MVRAQ09AA3		
38MVRAQ12AA3		
38MVRAQ18AA3		26
38MVRAQ24AA3		34

NOTE: The base pan is built in with multiple holes for proper draining during the defrost process. For applications where it is required to seal these holes, and re-direct the condensate drain, rubber plugs are available through RCD.

Outdoor Units

Crankcase Unit

The crankcase heater is standard on all unit sizes. Heater clamps must be placed around the compressor oil stump.

Base pan Heater

The base pan heater is standard on all unit sizes.

Manufacturer reserves the right to change, at any time, specifications and designs without notice and without obligations.

DIMENSIONS

SYSTEM SIZE		9K	12K	9K	12K	18K	24K
		(115V)	(115V)	(208/230V)	(208/230V)	(208/230V)	(208/230V)
Height (H)	in (mm)	19.49(495)	19.49(495)	19.49(495)	19.49(495)	21.85(555)	26.50(673)
Width (W)	in (mm)	28.35(720)	28.35(720)	28.35(720)	28.35(720)	30.12(765)	35.04(890)
Depth (D)	in (mm)	10.63(270)	10.63(270)	10.63(270)	10.63(270)	11.93(303)	13.46(342)
Weight - Net	lbs. (kg)	54.67(24.8)	55.11 (25)	52.91 (24)	52.91 (24)	64.15(29.1)	97.88(44.4)
Packaging							
Height	in (mm)	21.26(540)	21.26(540)	21.26(540)	21.26(540)	24.02(610)	29.13(740)
Width	in (mm)	32.87(835)	32.87(835)	32.87(835)	32.87(835)	34.92(887)	39.17(995)
Depth	in (mm)	11.81(300)	11.81(300)	11.81(300)	11.81(300)	13.27(337)	15.67(398)
Weight - Gross	lbs. (kg)	58.42(26.5)	58.86(26.7)	56.44(25.6)	56.44(25.6)	69.67(31.6)	104.50(47.4)
Carton Drawing No.	--	818*288*520	818*288*520	818*288*520	818*288*520	877*327*590	985*388*720
Carton Material	--	Carton Box					
Material Thickness	in (mm)	0.197(5)	0.197(5)	0.197(5)	0.197(5)	0.197(5)	0.197(5)

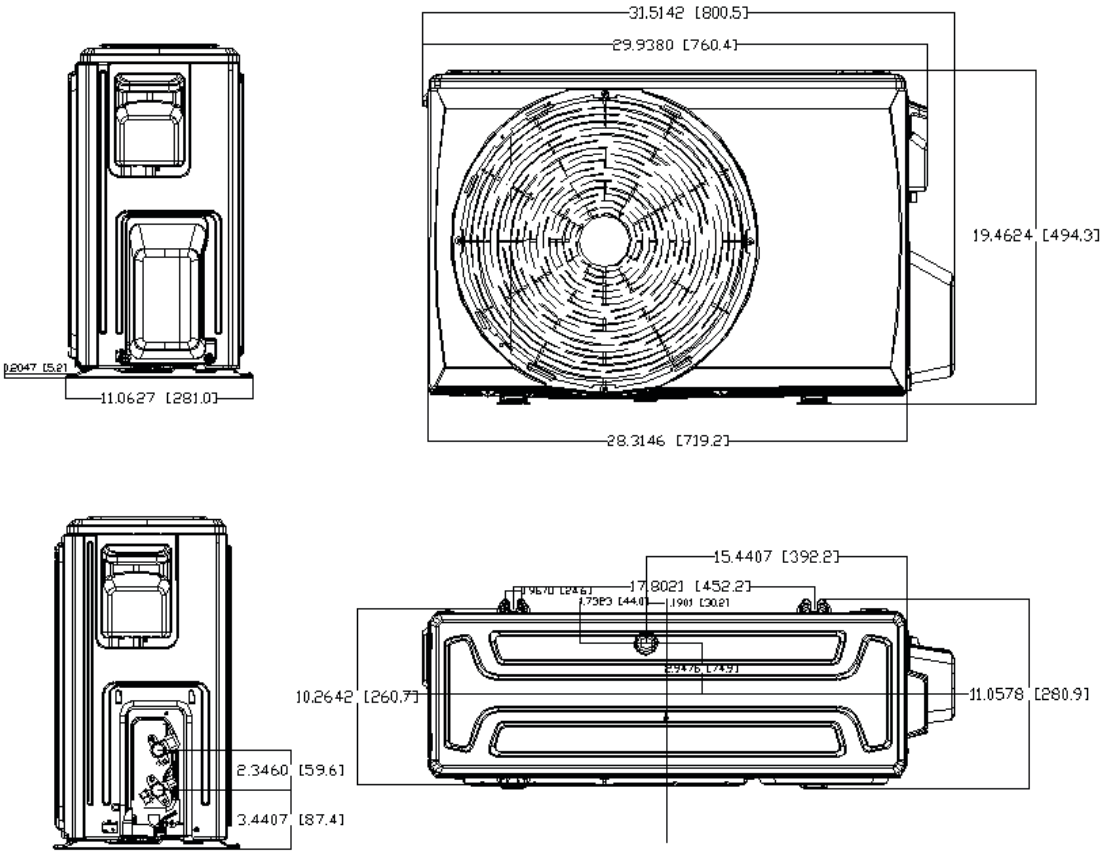

Fig. 2 — Sizes 9K/12K (115V) and 9K/12K (208/230V) Heat Pump

DIMENSIONS (CONT)

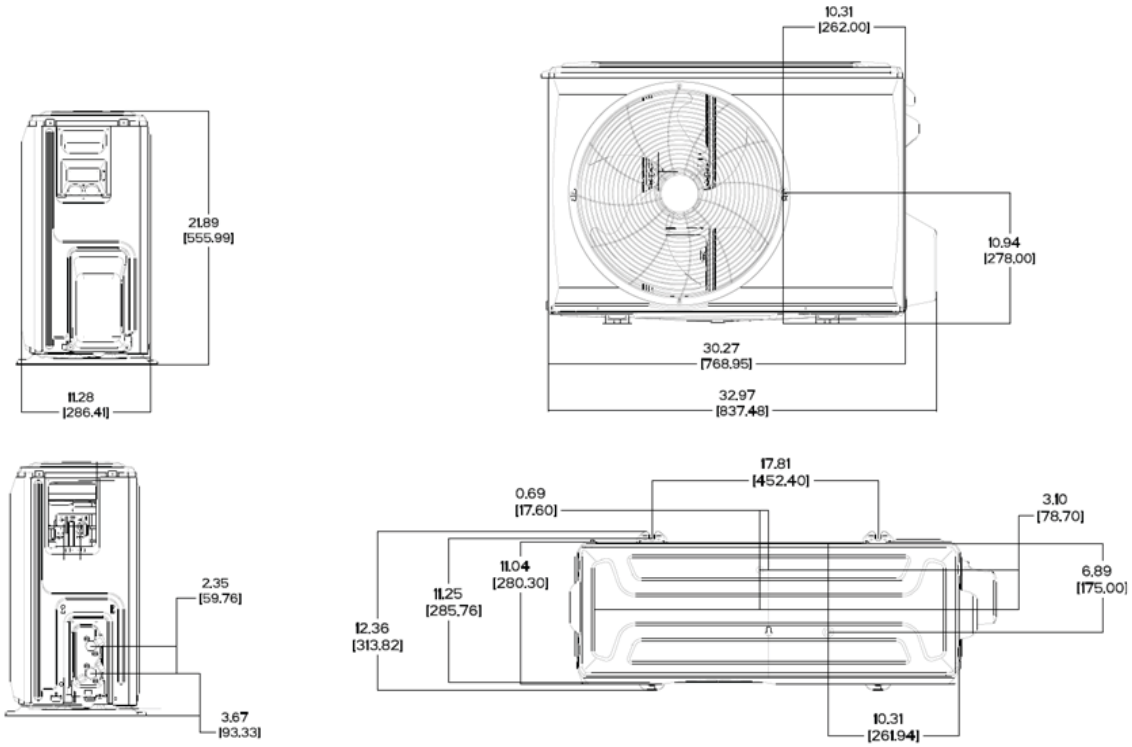

Fig. 3 — Size 18K Heat Pump

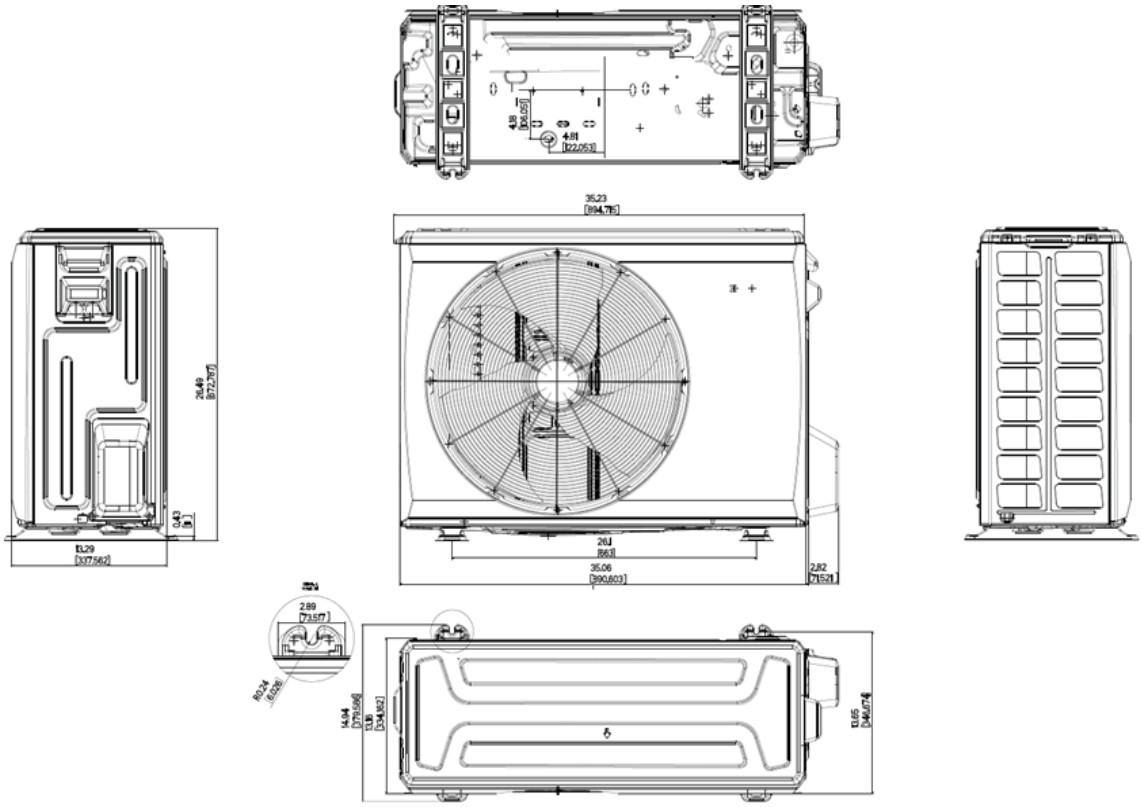

Fig. 4 — Size 24K Heat Pump

CLEARANCES

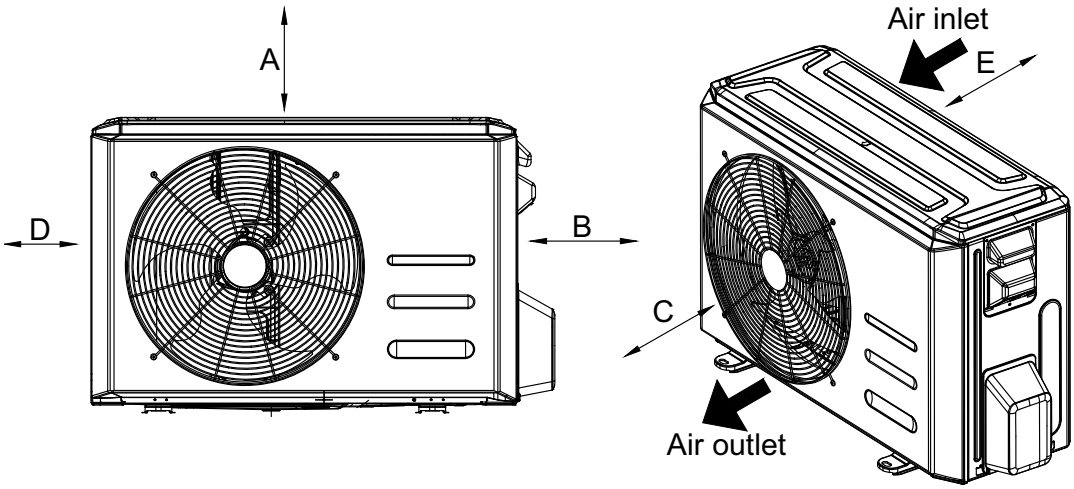

Fig. 5 — Clearances

UNIT	MINIMUM VALUE IN. (MM)
A	24 (609)
B	24 (609)
C	24 (609)
D	4 (101)
E	6 (152)

NOTE: The outdoor unit must be mounted at least 2in (50mm) above the maximum anticipated snow depth.

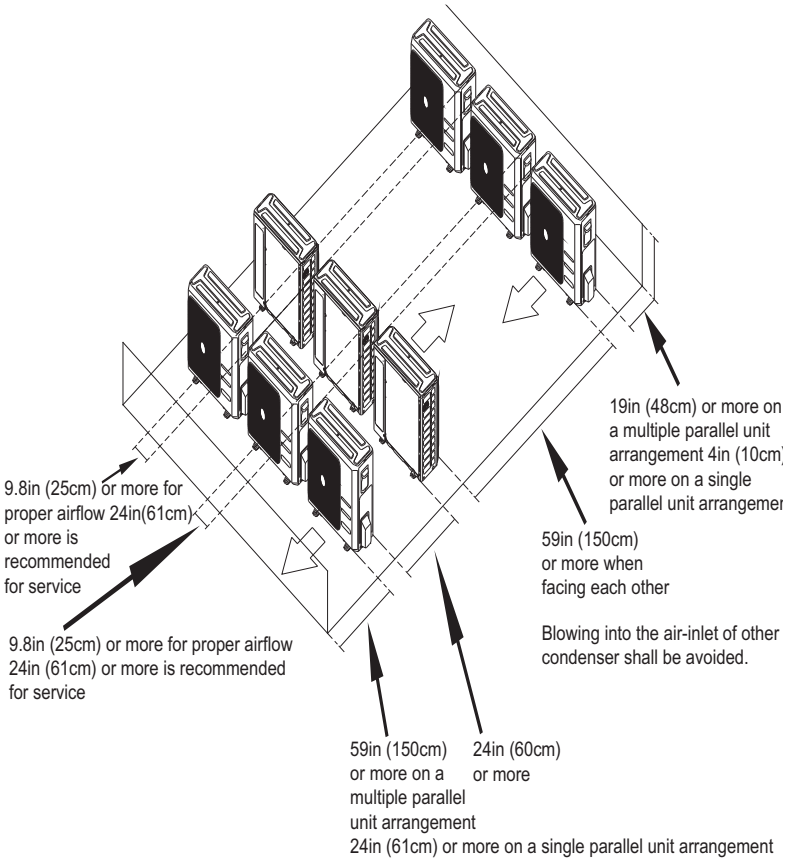

Fig. 6 — Clearances for multiple units

APPLICATION DATA

Unit Selection

Select equipment that either matches or supports slightly more than the anticipated peak load. This provides better humidity control, fewer unit cycles, and less part-load operation.

For units used in spaces with high sensible loads, base equipment selection on unit sensible load, not on total anticipated load. Adjust for anticipated room wet bulb temperature to avoid undersizing the equipment.

Unit Mounting (Outdoor)

Refer to the unit's installation instructions for further details.

Unit leveling - For reliable operation, units should be level in all planes.

Clearance - Minimum clearance (see Fig. 5 — on page 7) must be provided for airflow. The condensing units are designed for free-flow application. Air inlets and outlets should not be restricted.

Unit location - A location which is convenient to installation and not exposed to strong winds. A location that can bear the weight of the outdoor unit and where the outdoor unit can be mounted in a level position.

Do not install the indoor or outdoor units in a location with special environmental conditions. For those applications, contact your sales representative.

System Operating Conditions

OPERATING RANGE MIN / MAX °F (°C)		
	Cooling	Heating
Outdoor DB	0 ~ 122 (-17 ~ 50)	0 ~ 86 (-17 ~ 30)

NOTE: Reference the product installation instructions for more information.

Metering Devices

The outdoor unit utilizes a capillary tube to manage the connected fan coil's refrigerant flow.

Drain Connections

Install drains to meet the local sanitation codes.

Refrigerant Lines

General refrigerant line sizing:

1. The outdoor units are shipped with a full charge of R410A refrigerant. All charges, line sizing, and capacities are based on runs of 25 ft. (7.6 m). For runs over 25 ft. (7.6 m), review the *Long Line Applications* section for the proper charge adjustments.
2. Refrigerant lines should not be buried in the ground. If it is necessary to bury the lines, do not bury more than 36−in (914 mm). Provide a minimum 6−in (152 mm) vertical rise to the service valves to prevent refrigerant migration.
3. Both lines must be insulated. Use a minimum of 1/2−in. (12.7 mm) thick insulation. Closed−cell insulation is recommended in all long−line applications.
4. Special consideration should be given to isolating the interconnecting tubing from the building structure. Isolate the tubing so vibration or noise is not transmitted into the structure.

Long Line Applications:

1. No change in line sizing is required.
2. Add refrigerant per the **Additional Charge** table.

ADDITIONAL CHARGE						
Unit Size	Total Line Length ft. (m)		Additional Charge, oz/ft. FT (m)			
	Min	Max	10-25 (3-9)	>25-82 (8-25)	>82-98 (25-30)	>98-164 (30-50)
9	10(3)	82(25)	None	0.16		
12						
18		98(30)			0.16	
24		164(50)		0.32	0.32	0.32

SPECIFICATIONS

SYSTEM	SIZE		9K	12K	9K	12K	18K	24K
	Outdoor Model		38MVRAQ09AA1	38MVRAQ12AA1	38MVRAQ09AA3	38MHVRAQ12AA3	38MVRAQ18AA3	38MHVRAQ24AA3
Electrical	Voltage, Phase, Cycle	V/Ph/ Hz	115-1-60	115-1-60	208/230-1-60	208/230-1-60	208/230-1-60	208/230-1-60
	MCA	A.	16	17	9	9	15	19
	Recommended Fuse Size		20	20	15	15	15	20
	MOCP - Fuse Rating	A.	25	25	15	15	20	30
Operating Range	Cooling Outdoor DB Min - Max	° F (° C)	0~ 122 (-17~ 50)	0~ 122 (-17~ 50)	0~ 122 (-17~ 50)	0~ 122 (-17~ 50)	0~ 122 (-17~ 50)	0~ 122 (-17~ 50)
	Heating Outdoor DB Min - Max	° F (° C)	0~ 86 (-17~ 30)	0~ 86 (-17~ 30)	0~ 86 (-17~ 30)	0~ 86 (-17~ 30)	0~ 86 (-17~ 30)	0~ 86 (-17~ 30)
Piping	Total Piping Length	ft (m)	82 (25)	82 (25)	82 (25)	82 (25)	98 (30)	164 (50)
	Piping Lift*	ft (m)	33 (10)	33 (10)	33 (10)	33 (10)	66 (20)	82 (25)
	Pipe Connection Size - Liquid	in (mm)	1/4 (6.35)	1/4 (6.35)	1/4 (6.35)	1/4 (6.35)	1/4 (6.35)	3/8 (9.52)
	Pipe Connection Size - Suction	in (mm)	3/8 (9.52)	3/8 (9.52)	3/8 (9.52)	3/8 (9.52)	1/2 (12.7)	5/8 (16)
Refrigerant	Type		R410A	R410A	R410A	R410A	R410A	R410A
	Charge	lbs (kg)	1.28(0.58)	1.61(0.73)	1.61(0.73)	1.61(0.73)	3.0(1.36)	3.92 (1.78)
	Metering Device		Capillary	Capillary	Capillary	Capillary	Capillary	Orifice
Outdoor Coil	Face Area	Sq. Ft.	3.68	3.68	3.68	3.68	4.09	5.9
	No. Rows		1	1	1	1	2	1.6
	Fins per inch		20	20	20	20	18	20
	Circuits		2	2	2	2	4	5
Compressor	Type		Rotary Inverter	Rotary Inverter	Rotary Inverter	Rotary Inverter	Rotary Inverter	Rotary Inverter
	Model		KSK103D33UEZ3	KSK103D33UEZ3	KSK103D33UEZ3	KSK103D33UEZ3	KSN140D21UFZ	KTM240D57UMT
	Oil Type		VG74	VG74	VG74	VG74	VG74	VG74
	Oil Charge	Fl. Oz.	10.48	10.48	10.48	10.48	14.88	22.66
	Rated Current	RLA	0.475	0.475	0.475	0.475	0.645	0.82
Outdoor	Unit Width	in (mm)	28.35(720)	28.35(720)	28.35(720)	28.35(720)	30.12(765)	35.04(890)
	Unit Height	in (mm)	19.49(495)	19.49(495)	19.49(495)	19.49(495)	21.85(555)	26.50(673)
	Unit Depth	in (mm)	10.63(270)	10.63(270)	10.63(270)	10.63(270)	11.93(303)	13.46(342)
	Net Weight	lbs (kg)	54.67(24.8)	55.11 (25)	52.91 (24)	52.91 (24)	64.15 (29.1)	97.88 (44.4)
	Airflow	CFM	1,059	1,059	1,059	1,059	1,235	1,765
	Sound Pressure	dB(A)	54.5	55	54.5	54.5	57.0	59.5

COMPATIBILITY

INDOOR UNIT		OUTDOOR UNIT					
		38MVRAQ09AA1	38MVRAQ12AA1	38MVRAQ09AA3	38MVRAQ12AA3	38MVRAQ18AA3	38MVRAQ24AA3
High Wall	DHMVHAQ09XA1	•					
	DHMVHAQ12XA1		•				
	DHMVHAQ09XA3			•			
	DHMVHAQ12XA3				•		
	DHMVHAQ18XA3					•	
	DHMVHAQ24XA3						•

PERFORMANCE

INDOOR MODEL		DHMVHAQ09XA1	DHMVHAQ12XA1	DHMVHAQ09XA3	DHMVHAQ12XA3	DHMVHAQ18XA3	DHMVHAQ24XA3
Energy Star	-	NO	NO	NO	NO	NO	NO
Cooling System Tons	-	0.8	1.0	0.8	1.0	1.5	2.0
Cooling Rated Capacity	Btu/h	9,000	12,000	9,000	12,000	18,000	24,000
Cooling Capacity Range	Btu/h	3,800~10,200	4,200~12,000	3,800~10,200	4,200~12,000	6,900~19,600	6,400~24,300
SEER	-	16.5	16.5	16.5	16.8	16.8	16.5
EER	-	10.1	8.8	8.8	8.8	9.9	8.9
Heating Rated Capacity (DOE H12 - 47°F)	Btu/h	9,800	12,000	10,000	12,000	18,000	24,000
Heating Rated Capacity (DOE H32 - 17°F)	Btu/h	5500	6500	6100	6500	11000	14400
Heating Maximum Capacity (17°F)	Btu/h	8,600	8,800	9,000	9,500	11,400	18,000
Heating Maximum Capacity (5°F)	Btu/h	5,300	5,500	5,800	6,100	8,800	14,500
Heating Capacity Range	Btu/h	4,000~11,000	4,600~12,000	4,000~11,000	4,600~12,000	4,480~18,800	6,700~27,500
HSPF	-	9.8	9.4	9.4	9.4	9.7	9.5
COP (DOE H12 - 47°F)	W/W	2.90	3.0	3.2	3.0	3.10	2.84
COP (DOE H32 - 17°F)	W/W	2.55	2.50	2.50	2.5	2.52	2.33
COP (5°F)	W/W	1.70	1.70	1.70	1.70	1.80	1.80

Air Flow Data

38MVRA UNIT SIZE	9K (115V)	12K (115V)	9K (208/230V)	12K (208/230V)	18K (208/230V)	24K (208/230V)
Outdoor (CFM)	1,059	1,059	1,059	1,059	1,235	1,765

Sound Data

38MVRA UNIT SIZE (HP)		9K (115V)	12K (115V)	9K (208/230V)	12K (208/230V)	18K (208/230V)	24K (208/230V)
Outdoor Sound Pressure Level	dB(A)	54.5	55	54.5	54.5	57	59.5
Outdoor Sound Power Level	dB(A)	60.94	63.75	63.92	63.92	68	68.7

Manufacturer reserves the right to change, at any time, specifications and designs without notice and without obligations.

Sound Pressure In Octave Bands

	Frequency (Hz)	63	125	250	500	1000	2000	4000	8000
9 K (115 V)	Cooling dB(A)	53.5	54.2	53.2	49.6	45.2	40.2	35.5	30.9
	Heating dB(A)	53.7	57.3	55.4	52.7	48.1	43.2	39.5	33.8
	Indoor dB(A)	36.5	34.2	35.1	37.7	35.2	30.9	23.6	16.7
12K (115)	Cooling dB(A)	52.2	52.8	54.5	48.9	45.6	39.7	37.7	31.1
	Heating dB(A)	55.8	58.2	57.0	53.5	48.6	43.5	38.4	34.5
	Indoor dB(A)	37.9	31.9	36.7	38.9	37.9	33.7	25.8	17.9
9K (208V)	Cooling dB(A)	53.5	53.2	52.4	49.7	46.3	40.2	38.0	31.7
	Heating dB(A)	50.5	55.6	54.1	51.8	47.6	41.9	36.6	33.8
	Indoor dB(A)	35.9	34.0	37.3	39.3	37.6	33.5	25.5	18.1
12K (208V)	Cooling dB(A)	53.5	53.2	52.4	49.7	46.3	40.2	38.0	31.7
	Heating dB(A)	50.5	55.6	54.1	51.8	47.6	41.9	36.6	33.8
	Indoor dB(A)	35.9	34.0	37.3	39.3	37.6	33.5	25.5	18.1
18K (208V)	Cooling dB(A)	53.0	51.9	52.6	50.1	46.8	42.1	37.7	32.1
	Heating dB(A)	57.2	60.9	57.1	55.3	49.2	46.1	40.9	36.2
	Indoor dB(A)	41.4	38.4	41.3	39.7	42.1	36.9	28.2	18.0
24K (208V)	Cooling dB(A)	57.5	60.8	61.2	55.2	51.5	46.3	40.0	33.1
	Heating dB(A)	59.2	62.8	62.9	56.4	53.4	48.1	42.4	35.8
	Indoor dB(A)	41.4	38.4	41.3	39.7	42.1	36.9	28.2	18.0

Outdoor Unit Sound Pressure Test Conditions

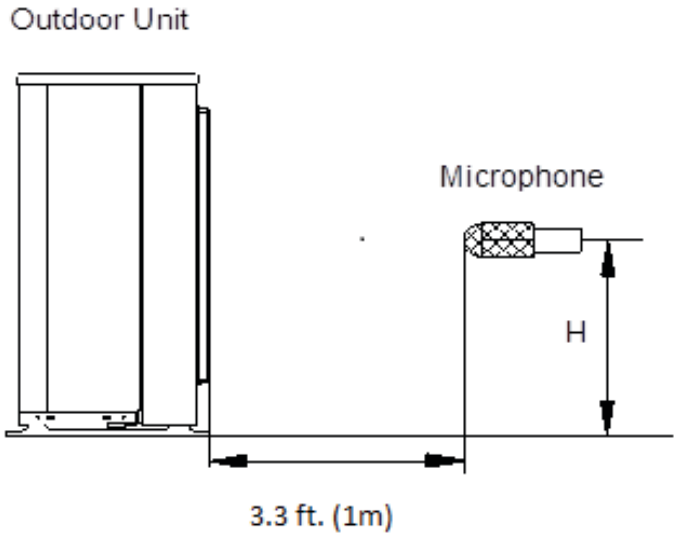

Fig. 7 — Outdoor Unit Sound Pressure Test Conditions

ELECTRICAL DATA

SYSTEM SIZE		9K	12K	9K	12K	18K	24K
POWER SUPPLY	Volts-PH-Hz	115-1-60	115-1-60	208/230-1-60	208/230-1-60	208/230-1-60	208/230-1-60
	Max – Min* Oper. Voltage	95~130	95~130	165~264	165~264	165~264	165~264
	MCA	16	17	9	9	15	19
	Recommended Fuse Size	20	20	15	15	20	20
	MOCP	25	25	15	15	20	30
COMPRESSOR	Volts – PH – Hz	115-1-60	115-1-60	208/230-1-60	208/230-1-60	208/230-1-60	208/230-1-60
	RLA	11.67	12.53	6.47	6.47	7.5	14.25
OUTDOOR FAN MOTOR	FLA	0.605	0.605	0.605	0.605	0.823	1
	Rated HP	0.027	0.027	0.027	0.027	0.046	0.11
	Output	20	20	20	20	34	80

*Permissible limits of the voltage range at which the unit will operate satisfactorily.

LEGEND

FLA - Full Load Amps
MCA - Minimum Circuit Amps
MOCP - Maximum Over-Current Protection
RLA - Rated Load Amps

FAN AND MOTOR SPECIFICATIONS

38MVRA			9 K	12K	9K	12K	18K	24K
			(115 V)	(115V)	(208/230V)	(208/230V)	(208/230V)	(208/230V)
OUTDOOR FAN	Material	-	Acrylonitrile Styrene +20%GF	Acrylonitrile Styrene +20%GF	Acrylonitrile Styrene +20%GF	Acrylonitrile Styrene +20%GF	Acrylonitrile Styrene +20%GF	Acrylonitrile Styrene +20%GF
	Type	-	ZL-415*129*8-3KN	ZL-415*129*8-3KN	ZL-415*129*8-3KN	ZL-415*129*8-3KN	ZL-421*133*8-3KN	ZL-535*133*12-3KFN
	Diameter	inch	16.34 (415)	16.34 (415)	16.34 (415)	16.34 (415)	16.58 (421)	21.06 (535)
	Height	inch	5.1(129)	5.1(129)	5.1(129)	5.1(129)	5.24 (133)	5.24 (133)
OUTDOOR FAN MOTOR	Model	-	ZKFN-20-8-1	ZKFN-20-8-1	ZKFN-20-8-1	ZKFN-20-8-1	ZKFN-34-10-1	ZKFN-80-8-3
	Volts	V	115	115	208/230	208/230	208/230	208/230
	Phase		1	1	1	1	1	1
	Hertz	Hz	60	60	60	60	60	60
	FLA	A	0.605	0.605	0.605	0.605	0.823	1
	Rated HP	HP	0.027	0.027	0.027	0.027	0.046	0.11
	Output	W	20	20	20	20	34	80
	Type	-	DC	DC	DC	DC	DC	DC
	Insulation class	-	E	E	E	E	E	E
	Safe class	-	IPX4	IPX4	IPX4	IPX4	IPX4	IPX4
	Input	W	56	56	56	56	74	88
	Range of current	Amps	0.475±10%	0.475±10%	0.475±10%	0.475±10%	0.645±10%	0.82±10%
	Rated current	Amps	0.475	0.475	0.475	0.475	0.645	0.82
	Capacitor	μF	NA	NA	NA	NA	NA	NA
	Speed	rev/ min	850/500	850/500	850/500	850/500	1200/700	810/720
	Rated RPM	rev/ min	850	850	850	850	1200	810
	Max. input	W	76	76	76	76	100	120

COOLING PERFORMANCE DATA (HEAT PUMP)

Model	(SHEET 1 OF 2)												
	Indoor Conditions			0°F	5°F	17°F	47°F	77°F	86°F	95°F	104°F	113°F	122°F
	DB	WB		(-17°C)	(-15°C)	(-8°C)	(8°C)	(25°C)	(30°C)	(35°C)	(40°C)	(45°C)	(50°C)
9K (115)	69.8°F (21°C)	59°F (15°C)	TC	9.8	9.73	9.53	9.18	8.94	8.26	8.6	7.95	4.72	4.72
			SC	6.76	6.72	6.5	6.47	6.35	5.93	6.18	5.77	4.29	4.29
			Input	0.68	0.61	0.48	0.46	0.76	0.82	1.07	1.16	0.9	0.9
	75.2°F (24°C)	62.6°F (17°C)	TC	10.59	10.53	10.32	9.98	9.73	9.06	9.39	8.74	5.51	5.51
			SC	7.68	7.63	7.48	7.23	7.06	6.57	6.81	6.34	4	4
			Input	0.73	0.65	0.52	0.5	0.8	0.87	1.11	1.2	0.94	0.94
	80.6°F (27°C)	66.2°F (19°C)	TC	11.39	11.	11.12	10.77	10.53	9.86	10.19	9.54	6.31	6.31
			SC	8.14	8.1	7.95	7.7	7.53	7.05	7.29	6.82	4.51	4.51
			Input	0.77	0.69	0.56	0.54	0.84	0.91	1.15	1.24	0.98	0.98
	89.6°F (32°C)	73.4°F (23°C)	TC	12.91	12.85	12.64	12.3	12.06	11.38	11.72	11.06	7.84	7.84
			SC	8.42	8.38	8.24	8.02	7.86	7.42	7.64	7.21	5.11	5.11
			Input	0.84	0.76	0.64	0.62	0.92	0.98	1.23	1.32	1.05	1.05
12K(115)	69.8°F (21°C)	59°F (15°C)	TC	9.76	9.98	10.12	10.22	10.53	9.69	10.31	8.46	6.39	4.5
			SC	7.03	7.01	6.96	7.28	7.58	7.04	7.31	6.42	5.49	4.5
			Input	0.79	0.69	0.51	0.49	0.8	0.9	1.27	1.05	0.87	0.74
	75.2°F (24°C)	62.6°F (17°C)	TC	10.6	10.81	10.96	11.05	11.37	10.53	11.15	9.3	7.23	5.34
			SC	7.56	7.71	7.82	7.88	8.11	7.51	7.95	6.63	5.15	3.81
			Input	0.82	0.73	0.55	0.52	0.83	0.93	1.31	1.09	0.91	0.77
	80.6°F (27°C)	66.2°F (19°C)	TC	11.46	11.67	11.82	11.91	12.23	11.39	12.01	10.16	8.09	6.2
			SC	8.03	8.18	8.28	8.35	8.57	7.98	8.41	7.12	5.67	4.35
			Input	0.86	0.77	0.58	0.56	0.87	0.97	1.35	1.12	0.95	0.81
	89.6°F (32°C)	73.4°F (23°C)	TC	13.13	13.35	13.49	13.59	13.9	13.06	13.68	11.83	9.76	7.88
			SC	9.25	9.4	9.5	9.57	9.79	9.2	9.63	8.33	6.87	5.54
			Input	0.94	0.84	0.66	0.64	0.94	1.05	1.42	1.2	1.02	0.89
9/12K (230)	69.8°F (21°C)	59°F (15°C)	TC	10.72	10.51	10.3	10.16	9.8	10.26	10.52	9.03	5.23	5.23
			SC	7.56	7.49	7.39	7.28	7.1	7.33	7.47	6.74	5.1	5.1
			Input	0.64	0.68	0.77	0.49	0.76	1.04	1.32	1.18	0.93	0.93
	75.2°F (24°C)	62.6°F (17°C)	TC	11.45	11.24	11.03	10.89	10.53	10.99	11.25	9.76	5.96	5.96
			SC	8.23	8.08	7.92	7.82	7.56	7.9	8.08	7.01	4.28	4.28
			Input	0.68	0.71	0.8	0.53	0.8	1.08	1.35	1.22	0.97	0.97
	80.6°F (27°C)	66.2°F (19°C)	TC	12.24	12.04	11.82	11.68	11.32	11.79	12.05	10.55	6.75	6.75
			SC	8.71	8.56	8.41	8.31	8.05	8.38	8.57	7.5	4.8	4.8
			Input	0.72	0.76	0.85	0.57	0.84	1.12	1.4	1.26	1.01	1.01
	89.6°F (32°C)	73.4°F (23°C)	TC	13.78	13.57	13.35	13.21	12.85	13.32	13.58	12.08	8.29	8.29
			SC	9.02	8.88	8.74	8.65	8.42	8.72	8.89	7.91	5.42	5.42
			Input	0.8	0.84	0.93	0.65	0.92	1.2	1.48	1.34	1.09	1.09

Manufacturer reserves the right to change, at any time, specifications and designs without notice and without obligations.

Model	(SHEET 2 OF 2)												
	Indoor Conditions			0°F	5°F	17°F	47°F	77°F	86°F	95°F	104°F	113°F	122°F
	DB	WB		(-17°C)	(-15°C)	(-8°C)	(8°C)	(25°C)	(30°C)	(35°C)	(40°C)	(45°C)	(50°C)
18K	69.8°F (21°C)	59°F (15°C)	TC	13.64	13.86	14.21	14.42	12.96	14.55	14.66	13.54	10.94	8.08
			SC	10.25	10.37	10.26	10.62	9.92	10.67	10.56	10.16	8.95	7.66
			Input	0.63	0.63	0.58	0.67	0.92	1.41	1.8	1.95	1.68	1.47
	75.2°F (24°C)	62.6°F (17°C)	TC	15.25	15.46	15.81	16.03	14.56	16.15	16.26	15.15	12.54	9.68
			SC	11.13	11.28	11.54	11.7	10.63	11.79	11.87	11.05	9.15	7.07
			Input	0.71	0.71	0.65	0.75	1	1.48	1.87	2.03	1.76	1.55
	80.6°F (27°C)	66.2°F (19°C)	TC	16.75	16.96	17.31	17.53	16.06	17.65	17.76	16.64	14.04	11.18
			SC	12.04	12.2	12.45	12.6	11.55	12.7	12.77	11.97	10.1	8.04
			Input	0.78	0.78	0.73	0.82	1.07	1.56	1.95	2.1	1.83	1.62
	89.6°F (32°C)	73.4°F (23°C)	TC	19.61	19.82	20.17	20.39	18.93	20.52	20.63	19.51	16.91	14.05
			SC	14.17	14.33	14.58	14.74	13.68	14.83	14.91	14.1	12.22	10.15
			Input	0.92	0.92	0.87	0.96	1.21	1.7	2.09	2.25	1.98	1.76
24K	69.8°F (21°C)	59°F (15°C)	TC	19.97	20.08	21.8	18.28	21.46	20.47	21.41	20	17.11	11.53
			SC	14.29	14.34	15.45	13.54	15.28	14.71	15.33	14.61	13.09	10.57
			Input	1.67	1.65	0.97	1.18	1.93	2.1	2.74	2.96	2.69	1.97
	75.2°F (24°C)	62.6°F (17°C)	TC	20.37	20.48	22.2	18.68	21.86	20.88	21.81	20.4	17.52	11.94
			SC	14.68	14.76	16	13.47	15.76	15.05	15.72	14.71	12.63	8.61
			Input	1.55	1.53	0.85	1.06	1.81	1.98	2.62	2.84	2.57	1.85
	80.6°F (27°C)	66.2°F (19°C)	TC	21.68	21.79	23.51	19.99	23.17	22.19	23.13	21.71	18.83	13.25
			SC	15.35	15.43	16.65	14.16	16.4	15.71	16.37	15.37	13.33	9.38
			Input	1.6	1.58	0.9	1.11	1.86	2.03	2.67	2.89	2.62	1.9
	89.6°F (32°C)	73.4°F (23°C)	TC	24.54	24.65	26.37	22.85	26.03	25.04	25.98	24.57	21.68	16.1
			SC	15.77	15.85	16.95	14.69	16.73	16.1	16.7	15.8	13.94	10.35
			Input	1.78	1.76	1.08	1.29	2.04	2.21	2.85	3.06	2.8	2.08

Manufacturer reserves the right to change, at any time, specifications and designs without notice and without obligations.

HEATING PERFORMANCE DATA (HEAT PUMP)

Model	(SHEET 1 OF 2)										
	Indoor Conditions DB		0°F	5°F	17°F	19.4°F	24.8°F	32°F	39.2°F	44.6°F	53.6°F
			(-17°C)	(-15°C)	(-8°C)	(-7°C)	(-4°C)	(0°C)	(4°C)	(7°C)	(12°C)
9K	59°F (15°C)	TC	6.23	6.57	8.48	8.82	9.36	10.33	11.01	12.03	11.84
		Input	0.89	0.92	0.96	0.97	0.95	1.01	1	1.08	0.92
		COP	2.06	2.09	2.59	2.66	2.9	3	3.22	3.25	3.78
	64.4°F (18°C)	TC	6.15	6.5	8.4	8.74	9.28	10.25	10.93	11.95	11.76
		Input	0.87	0.91	0.94	0.96	0.93	0.99	0.99	1.07	0.9
		COP	2.07	2.1	2.61	2.68	2.92	3.02	3.24	3.28	3.82
	69°F (20.5°C)	TC	6.08	6.43	8.33	8.67	9.21	10.18	10.86	11.88	11.69
		Input	0.89	0.92	0.96	0.97	0.95	1.01	1	1.08	0.92
		COP	2.06	2.09	2.59	2.66	2.9	3	3.22	3.25	3.78
	71.6°F (22°C)	TC	5.1	5.45	7.35	7.69	8.23	9.2	9.88	10.9	10.71
		Input	0.85	0.89	0.92	0.94	0.91	0.97	0.97	1.05	0.88
		COP	1.76	1.8	2.33	2.4	2.64	2.77	2.99	3.05	3.56
12K	59°F (15°C)	TC	6.52	7.02	9.53	9.81	9.2	11.01	12.42	13.11	13.5
		Input	0.85	0.88	1.04	1	0.99	1.1	1.1	1.15	1.07
		COP	2.24	2.33	2.69	2.87	2.72	2.94	3.32	3.36	3.72
	64.4°F (18°C)	TC	6.59	7.09	9.6	9.88	9.27	11.08	12.49	13.18	13.57
		Input	0.85	0.88	1.03	1	0.99	1.09	1.09	1.14	1.06
		COP	2.27	2.36	2.72	2.91	2.74	2.97	3.35	3.38	3.75
	69°F (20.5°C)	TC	6.65	7.14	9.66	9.94	9.33	11.14	12.55	13.24	13.63
		Input	0.85	0.88	1.03	0.99	0.99	1.09	1.09	1.14	1.06
		COP	2.3	2.39	2.75	2.93	2.77	2.99	3.37	3.41	3.77
	71.6°F (22°C)	TC	6.68	7.18	9.69	9.98	9.36	11.17	12.58	13.27	13.66
		Input	0.85	0.87	1.03	0.99	0.99	1.09	1.09	1.14	1.06
		COP	2.31	2.41	2.76	2.95	2.78	3.01	3.39	3.42	3.79
9/12K	59°F (15°C)	TC	7.06	7.68	10.03	10.32	11.22	11.42	12.43	13.06	13.5
		Input	0.9	0.93	1.03	1.05	1.09	1.02	1.07	1.11	1.07
		COP	2.29	2.43	2.85	2.87	3.01	3.29	3.4	3.46	3.72
	64.4°F (18°C)	TC	7.21	7.83	10.18	10.47	11.36	11.57	12.58	13.21	13.65
		Input	0.95	0.97	1.08	1.1	1.14	1.06	1.12	1.15	1.11
		COP	2.23	2.36	2.76	2.79	2.92	3.18	3.29	3.35	3.6
	69°F (20.5°C)	TC	7.34	7.96	10.31	10.6	11.49	11.7	12.71	13.33	13.77
		Input	0.9	0.93	1.03	1.05	1.09	1.02	1.07	1.11	1.07
		COP	2.29	2.43	2.85	2.87	3.01	3.29	3.4	3.46	3.72
	71.6°F (22°C)	TC	6.46	7.08	9.43	9.72	10.61	10.82	11.83	12.46	12.9
		Input	1.01	1.04	1.14	1.16	1.2	1.13	1.18	1.22	1.17
		COP	1.87	2	2.42	2.45	2.58	2.81	2.93	3	3.22
18K	59°F (15°C)	TC	10.12	10.9	13.38	13.45	14.72	15.79	17.07	18.34	18.14
		Input	1.4	1.45	1.49	1.45	1.51	1.52	1.59	1.61	1.41
		COP	2.38	2.52	2.92	2.95	3.08	3.37	3.47	3.53	3.79
	64.4°F (18°C)	TC	10.88	11.66	14.14	14.21	15.49	16.56	17.83	19.11	18.91
		Input	1.46	1.51	1.55	1.51	1.57	1.58	1.65	1.67	1.47
		COP	2.18	2.26	2.67	2.76	2.89	3.07	3.17	3.36	3.77
	69°F (20.5°C)	TC	11.54	12.31	14.8	14.87	16.14	17.21	18.49	19.76	19.56
		Input	1.52	1.57	1.6	1.56	1.62	1.63	1.7	1.72	1.52
		COP	2.23	2.31	2.71	2.79	2.92	3.09	3.19	3.37	3.77

Manufacturer reserves the right to change, at any time, specifications and designs without notice and without obligations.

Model	(SHEET 2 OF 2)										
	Indoor Conditions DB		0°F	5°F	17°F	19.4°F	24.8°F	32°F	39.2°F	44.6°F	53.6°F
			(-17°C)	(-15°C)	(-8°C)	(-7°C)	(-4°C)	(0°C)	(4°C)	(7°C)	(12°C)
24K	71.6°F (22°C)	TC	11.9	12.68	15.16	15.24	16.51	17.58	18.86	20.13	19.93
		Input	1.54	1.59	1.63	1.59	1.65	1.66	1.73	1.75	1.55
		COP	2.26	2.33	2.72	2.8	2.93	3.1	3.19	3.38	3.77
	59°F (15°C)	TC	14.98	17.33	21.38	22.38	24.41	26.4	28.64	27.6	31.01
		Input	2.47	2.47	2.64	2.72	2.9	2.97	3.1	2.69	3.01
		COP	1.78	2.06	2.38	2.41	2.47	2.6	2.7	3	3.02
	64.4°F (18°C)	TC	15	17.35	21.4	22.4	24.43	26.41	28.66	27.62	31.03
		Input	2.49	2.49	2.66	2.74	2.92	2.99	3.12	2.71	3.03
		COP	1.77	2.04	2.36	2.4	2.45	2.59	2.69	2.99	3
	69°F (20.5°C)	TC	15.02	17.36	21.41	22.41	24.45	26.43	28.68	27.64	31.05
		Input	2.51	2.51	2.68	2.76	2.94	3	3.14	2.73	3.05
		COP	1.75	2.03	2.35	2.38	2.44	2.58	2.68	2.97	2.99
	71.6°F (22°C)	TC	15.03	17.37	21.42	22.42	24.46	26.44	28.69	27.65	31.05
		Input	2.52	2.52	2.69	2.77	2.95	3.01	3.15	2.74	3.06
		COP	1.75	2.02	2.34	2.37	2.43	2.57	2.67	2.96	2.98

LEGEND

DB - Dry Bulb
WB - Wet Bulb
TC - Total Net Capacity (1000 Btu/hour)
SC - Sensible Capacity (1000 Btu/hour)
Input - Total Power (kW)
COP - Coefficient of Performance

WIRING

All wires must be sized per NEC (National Electrical Code) or CEC (Canadian Electrical Code) and local codes. Use Electrical Data table MCA (minimum circuit amps) and MOCP (maximum over current protection) to correctly size the wires and the disconnect fuse or breakers respectively.

Recommended Connection Method for Power and Communication Wiring:

The main power is supplied to the outdoor unit. The field supplied 14/3 stranded wire with ground with a 600 volt insulation rating, power/communication wiring from the outdoor unit to indoor unit consists of four (4) wires and provides the power for the indoor unit.

Two wires are line voltage AC power, one is communication wiring (S) and the other is a ground wire. Wiring between indoor and outdoor unit is polarity sensitive. The use of BX wire is NOT recommended.

If installed in a high Electromagnetic field (EMF) area and communication issues exists, a 14/2 stranded shielded wire can be used to replace L2/N and (S) between outdoor unit and indoor unit landing the shield onto ground in the outdoor unit only.

⚠ CAUTION

EQUIPMENT DAMAGE HAZARD

Failure to follow this caution may result in equipment damage or improper operation.

Wires should be sized based on NEC and local codes.

⚠ CAUTION

EQUIPMENT DAMAGE HAZARD

Failure to follow this caution may result in equipment damage or improper operation.

Be sure to comply with local codes while running wire from the indoor unit to the outdoor unit.

Every wire must be connected firmly. Loose wiring may cause the terminal to overheat or result in unit malfunction. A fire hazard may also exist. Ensure all wiring is tightly connected.

No wire should touch the refrigerant tubing, compressor or any moving parts.

Disconnecting means must be provided and shall be located within sight and readily accessible from the air conditioner.

Connecting cable with conduit shall be routed through the hole in the conduit panel.

WIRING DIAGRAMS

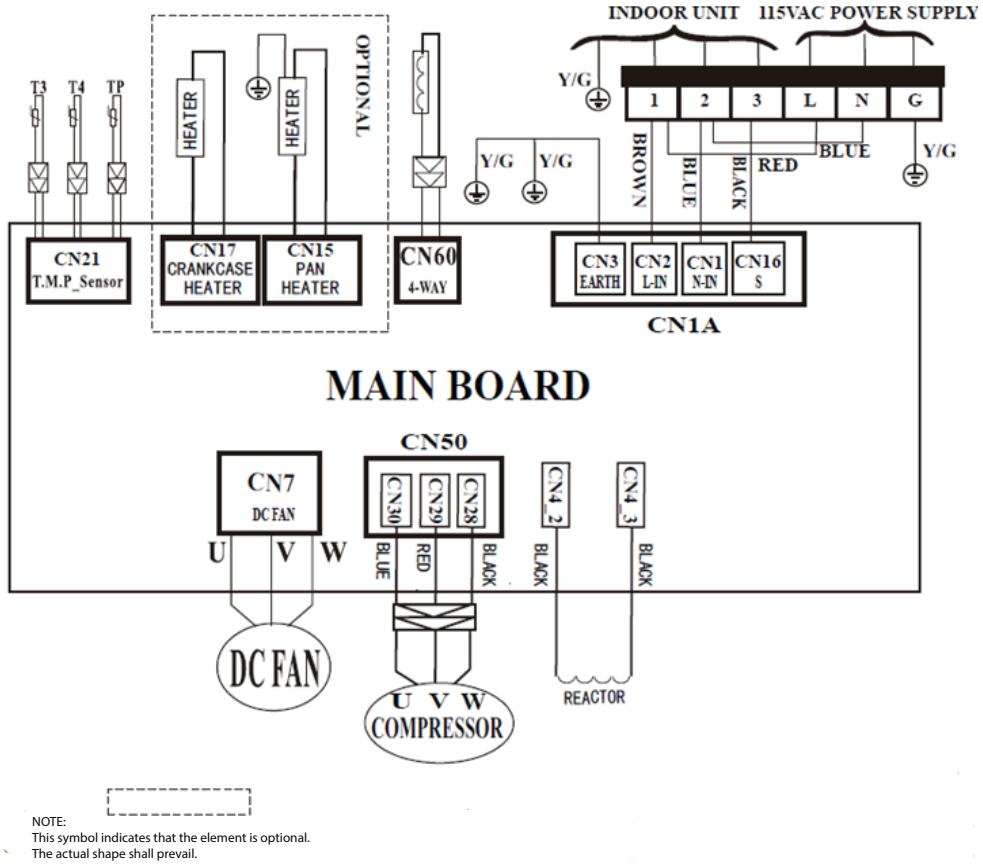

Fig. 8 — Wiring Diagram Heat Pump Size 9K - 12K (115V)

		CN1A	INPUT	**115V**	AC
		CN4_2/4_3	INPUT	**115V**	AC
		CN7	OUTPUT	0-310V	AC
		CN60	OUTPUT	115V	AC
T3	Condenser TEMP. Sensor	CN21	OUTPUT	0-5V	DC
T4	Ambient TEMP. Sensor				
TP	Discharge TEMP. Sensor				
		CN15	OUTPUT	115V	AC
		CN17	OUTPUT	115V	AC
		CN50	OUTPUT	0-310V	AC

WIRING DIAGRAMS (CONTINUED)

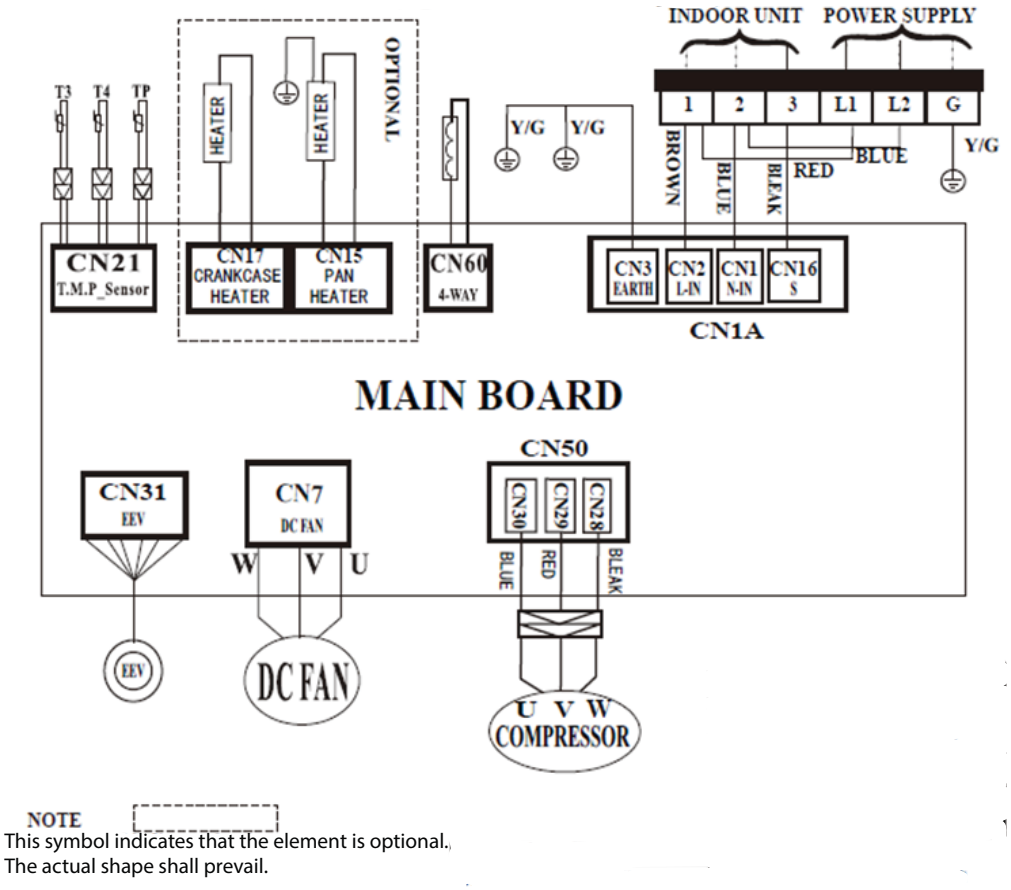

Fig. 9 — Wiring Diagram Sizes 9-18K (208-230V)

		CN1A	INPUT	230V	AC
		CN31	OUTPUT	0-12V	DC
		CN7	OUTPUT	230V	AC
T3	Condenser TEMP. Sensor	CN60	OUTPUT	230V	AC
T4	Ambient TEMP. Sensor				
TP	Discharge TEMP. Sensor				
		CN21	OUTPUT	0-5V	DC
		CN15	OUTPUT	230V	AC
		CN17	OUTPUT	230V	AC
		CN50	OUTPUT	230V	AC

WIRING DIAGRAMS (CONTINUED)

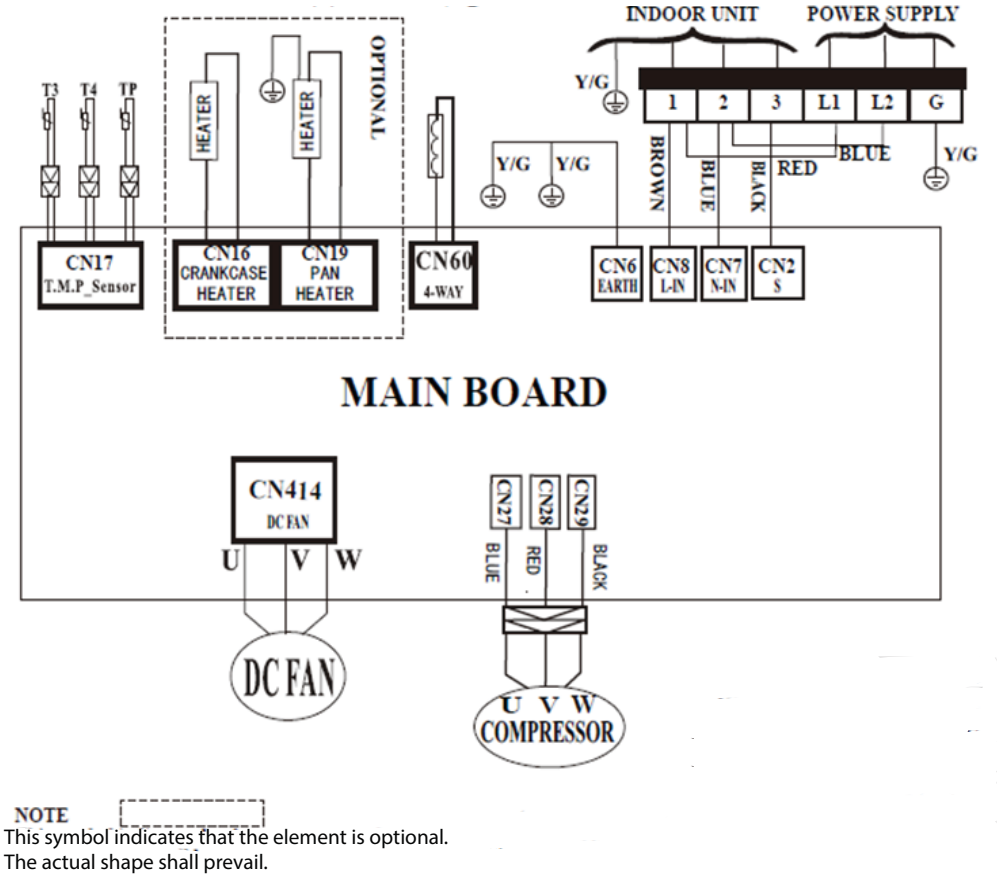

NOTE
This symbol indicates that the element is optional.
The actual shape shall prevail.

Fig. 10 — Wiring Diagram Heat Pump Size 24K (230V)

		CN6	GROUND	0V	AC
		CN2/7/8	INPUT	230V	AC
		CN414	OUTPUT	0-310V	AC
T3	Condenser TEMP. Sensor	CN60	OUTPUT	230V	AC
T4	Ambient TEMP. Sensor				
TP	Discharge TEMP. Sensor				
		CN17	OUTPUT	0-5V	DC
		CN16	OUTPUT	230V	AC
		CN19	OUTPUT	230V	AC
		CN27/28/29	OUTPUT	0-310V	AC

GUIDE SPECIFICATIONS

HORIZONTAL DISCHARGE OUTDOOR UNITS

Size Range: 3/4 to 2 Ton Nominal Cooling and Heating Capacity
Model Number: **38MVRA**

Part 1 - GENERAL

1.01 System Description

1. Outdoor air-cooled split system compressor sections suitable for on-the-ground, rooftop, wall hung or balcony mounting. Units consist of a rotary compressor, an air-cooled coil, propeller-type draw-through outdoor fan, reversing valve (HP), accumulator (HP units), metering device(s), and a control box. Units discharge air horizontally as shown on the contract drawings. Units function as the outdoor component of an air-to-air heat pump system.
2. Units are to be used in a refrigeration circuit matched to ductless heat pump fan coil units.

1.02 Agency Listings

1. Unit construction complies with ANSI/ASHRAE 15, latest revision, and with the NEC.
2. Units are evaluated in accordance with UL standard 60335-2-40.
3. Units are listed in the CEC directory.
4. Unit cabinet is capable of withstanding 500-hour salt spray test per Federal Test Standard No. 141 (method 6061).
5. Air-cooled condenser coils are leak tested at 550 psig.

1.03 Delivery, Storage, And Handling

Units are shipped in one piece and are stored and handled per unit manufacturer's recommendations.

1.04 Warranty (For Inclusion By Specifying Engineer)

Part 2 - PRODUCTS

2.01 Equipment

A. **General:**

Factory assembled, single piece, air-cooled outdoor unit. Contained within the unit enclosure is all the factory wiring, piping, controls, and the compressor.

B. **Unit Cabinet:**

1. Unit cabinet is constructed of galvanized steel, bonderized and coated with a baked-enamel finish on the inside and outside.
2. Unit access panels is removable with minimal screws and provides full access to the compressor, fan, and control components.
3. The outdoor compartment is isolated and has an acoustic lining to assure quiet operation.

C. **Fans:**

1. Outdoor fans are the direct drive propeller type, and discharges air horizontally. Fans draw air through the outdoor coil.
2. Outdoor fan motors are totally enclosed, single phase motors with class E insulation and permanently lubricated ball bearings. Motor shall be protected by internal thermal overload protection.
3. The shaft has inherent corrosion resistance.
4. Fan blades are non-metallic and statically and dynamically balanced.
5. Outdoor fan openings are equipped with a PVC metal/mesh coated protection grille over the fan.

D. **Compressor:**

1. Compressor is the fully hermetic rotary type.
2. Compressor is equipped with an oil system, operating oil charge, and a motor.
3. Motor is NEMA rated class E, suitable for operation in a refrigerant atmosphere.
4. Compressor assembly is installed on rubber vibration isolators.

E. **Outdoor Coil:**

The coil is constructed of aluminum hydrophilic pre-coated fins mechanically bonded to seamless copper tubes, which are cleaned, dehydrated, and sealed.

F. **Refrigeration Components:**

Refrigerant circuit components include a brass external liquid line service valve with service gage port connections, a suction line service valve with a service gage connection port, service gage port connections on compressor suction and discharge lines with Schrader type fittings with brass caps, accumulator, reversing valve.

G. **Controls and Safeties:**

Operating controls and safeties are factory selected, assembled, and tested. The minimum control functions include the following:

1. Controls:
   - A time delay control sequence is provided standard through the fan coil board
   - Automatic outdoor fan motor protection.
2. Safeties:
   - System diagnostics
   - Compressor motor current and temperature overload protection
   - Outdoor fan failure protection.

H. **Electrical Requirements:**

1. Unit operates on single-phase, 60 Hz power at 115V for unit size 09 and 12 and 208/230V for unit sizes 09, 12, 18, 24 as specified.
2. Unit electrical power has a single point connection.
3. Unit Control voltage to the indoor fan coil is 0-15V DC.
4. All power and control wiring must be installed per NEC and all local electrical codes.
5. The unit has high and low voltage terminal block connections.

Manufacturer reserves the right to change, at any time, specifications and designs without notice and without obligations.

© 2021 Carrier. All rights reserved.

Manufacturer reserves the right to change, at any time, specifications and designs without notice and without obligations.