PH3G--A
SINGLE-PACKAGED HEAT PUMP SYSTEM WITH R-410A REFRIGERANT
THREE PHASE
2 1/2 - 5 NOMINAL TONS (SIZES 30-60)

Product Data

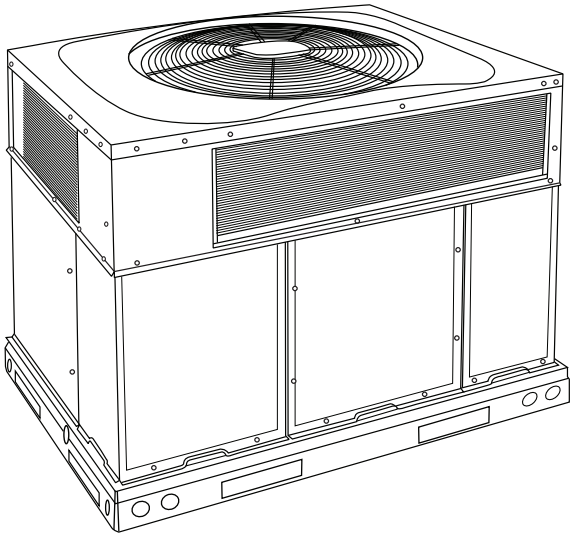

Fig. 1 - Unit PH3G--A

Single-Packaged Products with Energy-Saving Features and R-410A refrigerant.

- Up to 13.5 SEER
- 7.7 HSPF
- Up to 11.5 EER at 95°F OD
- Factory-Installed TXV
- ECM Motor-Standard
- Dehumidification Feature

FEATURES/BENEFITS

One-piece Heat Pump unit with optional electric heater, low installation cost, dependable performance and easy maintenance.

Efficient operation High-efficiency design with SEERs (Seasonal Energy Efficiency Ratio) of up to 13.5.

Easy Installation

Factory-assembled package is a compact, fully self-contained, heat pump unit that is prewired, pre-piped, and pre-charged for minimum installation expense. These units are available in a variety of standard capacity ranges with voltage options to meet residential and light commercial requirements. Units are lightweight and install easily on a rooftop or at ground level. The high tech composite base eliminates rust problems associated with ground level applications.

Innovative Unit Base Design

On the inside a high-tech composite material will not rust and incorporates a sloped drain pan which improves drainage and helps inhibit mold, algae and bacterial growth. On the outside metal base rails provide added stability as well as easier handling and rigging.

Durable, dependable components Compressors are designed for high efficiency. Each compressor is hermetically sealed against contamination to help promote longer life and dependable operation. Each compressor also has vibration isolation to provide quieter operation. All compressors have internal high pressure and overcurrent protection.

ECM Motor is standard on all PH3G--A models. Direct-drive, PSC (Permanent Split Capacitor)condenser-fan motors are designed to help reduce energy consumption and provide for cooling operation down to 40°F (4.4°C) outdoor temperature. Motormaster® II low ambient kit is available as a field installed accessory.

Thermostat controls designed to work as a system with Payne's small packaged product.

Thermostatic Expansion Valve - A hard shutoff, balance port TXV maintains a constant superheat at the evaporator exit (cooling cycle) resulting in higher overall system efficiency.

Refrigerant system is designed to provide dependability. Liquid filter driers are used to promote clean, unrestricted operation. Each unit leaves the factory with a full refrigerant charge. Refrigerant service connections make checking operating pressures easier.

High and Low Pressure Switches provide added reliability for the compressor.

Indoor and Outdoor coils are computer-designed for optimum heat transfer and efficiency. The indoor coil is fabricated from copper tube and aluminum fins and is located inside the unit for protection against damage. The outdoor coil is internally mounted on the top tier of the unit.

Low sound ratings ensure a quiet indoor and outdoor environment.

Easy to service cabinets provide easy 3-panel accessibility to serviceable components during maintenance and installation. The base with integrated drain pan provides easy ground level installation with a mounting pad. A nesting feature ensures a positive basepan to roof curb seal when the unit is roof mounted. A convenient 3/4-in. (19.05 mm) wide perimeter flange makes frame mounting on a rooftop easy.

Convertible duct configuration

Unit is designed for use in either downflow or horizontal applications. Each unit can be converted from horizontal to downflow and includes two horizontal duct covers. Downflow operation is provided in the field to allow vertical ductwork connections. The basepan seals on the bottom openings to ensure a positive seal in the vertical airflow mode.

Cabinets are constructed of heavyduty, phosphated, zinc-coated prepainted steel capable of withstanding 500 hours in salt spray. Interior surfaces of the evaporator and electric heater compartments are insulated with cleanable semi-rigid insulation board, which keeps the conditioned air from being affected by the outdoor ambient temperature and provides improved indoor air quality. (Conforms to American Society of Heating, Refrigeration and Air Conditioning Engineers No. 62P.) The sloped drain pan minimizes standing water in the drain. An external drain is provided.

Short-Cycling protection for the compressor is incorporated into our defrost control board ensuring a five minute delay (+/-2 minutes) before restarting compressor after shutdown for any reason.

TABLE OF CONTENTS

FEATURES/BENEFITS 1
MODEL NUMBER NOMENCLATURE 2
AHRI CAPACITIES 3
PHYSICAL DATA 4
OPTIONS AND ACCESSORIES 5
BASE UNIT DIMENSIONS 7-8
ROOF CURB ACCESSORY DIMENSIONS 9
SELECTION PROCEDURE 10
PERFORMANCE DATA 11-17
TYPICAL PIPING AND WIRING 23
APPLICATION DATA 24
ELECTRICAL DATA 25
TYPICAL WIRING SCHEMATICS 26-29
CONTROLS 30
GUIDE SPECIFICATIONS 31-32

MODEL NUMBER NOMENCLATURE

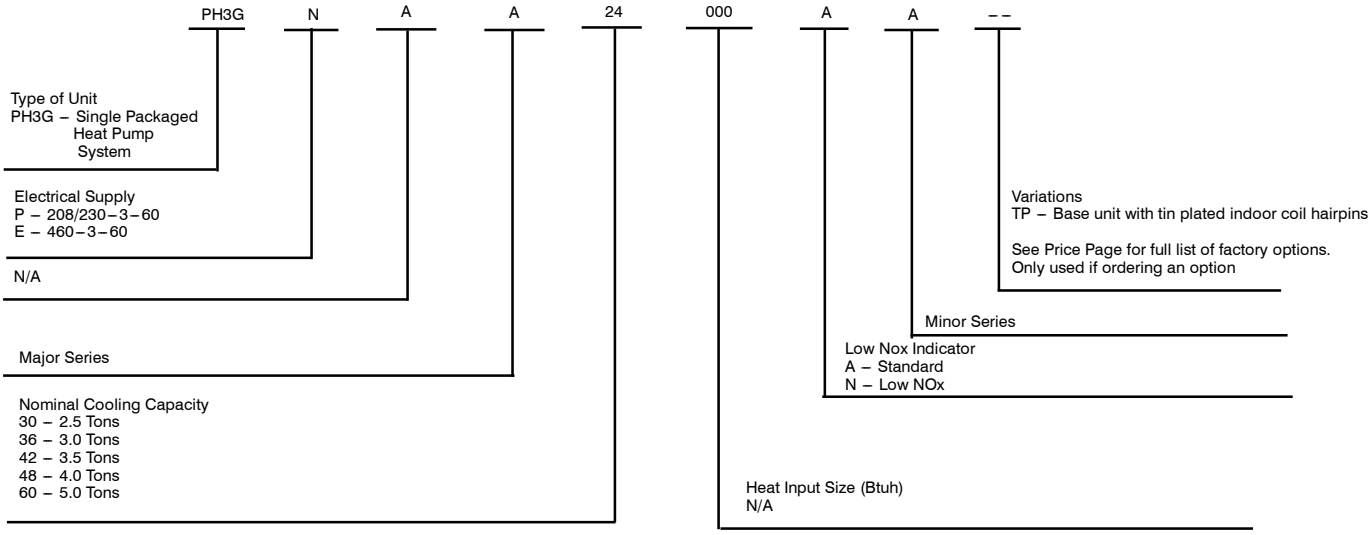

Use of the AHRI Certified TM Mark indicates a manufacturer's participation in the program For verification of certification for individual products, go to www.ahridirectory.org.

AHRI* CAPACITIES

COOLING CAPACITIES AND EFFICIENCIES

UNIT PH3G--A	NOMINAL TONS	STANDARD CFM	COOLING CAPACITIES (Btuh)	EER**	SEER†
30	2-1/2	1000	29,000	11.5	13.5
36	3	1200	35,000	11.5	13.5
42	3-1/2	1400	40,000	11.5	13.2
48	4	1600	47,000	11.5	13.5
60	5	1850	57,000	11.5	13.5

HEAT PUMP HEATING CAPACITIES AND EFFICIENCIES

UNIT PH3G--A	HEATING CAPACITY (Btuh) @ 47°F (8.3°C)	COP @ 47°F (8.3°C)	HEATING CAPACITY (Btuh) @ 17°F (−8.3°C)	COP @ 17°F (−8.3°C)	HSPF†
30	29,000	3.5	15,900	2.2	7.7
36	35,000	3.4	20,400	2.3	7.7
42	40,000	3.4	22,000	2.2	7.7
48	46,500	3.6	26,200	2.3	7.7
60	57,000	3.5	31,000	2.3	7.7

LEGEND
dB–Sound Levels (decibels)
db—Dry Bulb
SEER—Seasonal Energy Efficiency Ratio
wb—Wet Bulb
COP–Coefficient of Performance
HSPF–Heating Season Performance Factor
* Air Conditioning, Heating & Refrigeration Institute.
**At "A" conditions–80°F (26.7°C) indoor db/67°F (19.4°C) indoor wb & 95°F (35°C) outdoor db.
† Rated in accordance with U.S. Government DOE Department of Energy) test procedures and/or AHRI Standards 210/240.

Notes:
1. Ratings are net values, reflecting the effects of circulating fan heat. Ratings are based on:
Cooling Standard: 80°F (26.7°C) db, 67°F (19.4°C) wb indoor entering–air temperature and 95°F (35°C) db outdoor entering–air temperature.
2. Before purchasing this appliance, read important energy cost and efficiency information available from your retailer.

PHYSICAL DATA - UNIT PH3G--A

UNIT SIZE	PH3G--A30	PH3G--A36	PH3G--A42	PH3G--A48	PH3G--A60
NOMINAL CAPACITY (ton)	2.5	3	3.5	4	5
SHIPPING WEIGHT‡ (lb)	340	343	419	437	462
(kg)	154	156	190	198	210
COMPRESSOR QUANTITY	1				
TYPE	SCROLL COMPRESSOR				
REFRIGERANT	R-410A				
Refrigerant (R-410A) Quantity (lb)	10.2	7.9	10.0	9.6	12.3
Quantity (kg)	4.6	3.6	4.5	4.4	5.6
METERING DEVICE ID	TXV				
ORIFICE OD (in.)	0.035 (2)	0.037 (2)	0.038 (Left OD Coil) 0.040 (Right OD Coil)	0.046 (2)	0.052 (2)
(mm)	.89	.94	.97/1.02	1.2	1.3
OUTDOOR COIL					
Rows... Fins/in.	2...21	2...21	2...21	2...21	2...21
face area (sq. ft.)	11.9	11.9	13.6	13.6	17.5
OUTDOOR FAN					
Nominal Airflow (CFM)	2700	2700	3100	3100	3100
Fan Diameter (in.)	24	24	26	26	26
Fan Diameter (mm)	610	610	660	660	660
Diameter Motor HP (RPM)	1/5 (810)	1/5 (810)	1/5 (810)	1/5 (810)	1/5 (810)
INDOOR COIL					
Rows... Fins/in.	3...17	3...17	3...17	3...17	3...17
face area (sq. ft.)	3.7	3.7	4.7	4.7	5.7
INDOOR BLOWER					
Nominal Cooling Airflow (CFM)	1000	1200	1400	1600	1850
Size (in.)	10x10	11x10	11x10	11x10	11x10
(mm)	254x254	279x254	279x254	279x254	279x254
Motor (HP)	1/2	3/4	3/4	1.0	1.0
HIGH-PRESSURE SWITCH (psig)					
Cutout	650±15				
Reset (Auto)	420±25				
LOSS-OF-CHARGE/LOW-PRESSURE SWITCH (Liquid Line) (psig)					
Cutout	20±5				
Reset (Auto)	45±10				
	20±5				
	45±10				
RETURN-AIR FILTERS*†					
throwaway (in.)	20x24x1	24x30x1		24x36x1	
(mm)	508x610x25	610x762x25		610x914x25	

*Required filter sizes shown are based on the larger of the AHRI (Air Conditioning, Heating and Refrigeration Institute) rated cooling airflow or the heating airflow velocity of 300 ft/minute for throwaway type or 450 ft/minute for high-capacity type. Air filter pressure drop for non-standard filters must not exceed 0.08 IN. W.C.

† If using accessory filter rack refer to the filter rack installation instructions for correct filter size and quantity.

‡ For 460 volt units, add 14 lb (6.4 kg) to the weight.

A-Weighted Sound Power Level (dBA)

MODEL PH3G--A	STANDARD RATING (dBA)	TYPICAL OCTAVE BAND SPECTRUM (dBA) (without tone adjustment)						
		125	250	500	1000	2000	4000	8000
30	76	60.5	67.5	72.0	70.0	67.0	61.0	51.5
36	77	63.0	68.0	73.0	71.0	67.0	62.0	55.0
42	78	65.0	68.5	74.5	72.5	69.5	64.5	56.5
48	78	62.0	68.5	74.0	72.5	70.0	64.0	56.0
60	76	63.0	66.5	69.5	71.0	66.0	65.0	59.0

NOTE: Tested in accordance with AHRI Standard 270-1995 (not listed in AHRI).

OPTIONS AND ACCESSORIES

ITEM	DESCRIPTION	FACTORY INSTALLED OPTION	FIELD INSTALLED ACCESSORY
Coil Options	Base unit with tin plated indoor coil hairpins	X	
Compressor Start Kit	Compressor Start Kit assists compressor start–up by providing additional starting torque on sing phase units only.		X
Corporate Thermostats	Thermostats provide control for the system heating and cooling functions.		X
Crankcase Heater	Crankcase Heater provides anti–floodback protection for low–load cooling applications.		X*
Economizer	Horizontal Economizer with solid state controls and barometric relief dampers includes filter racks and provide outdoor air during cooling and reduce compressor operation.		X
	Vertical Economizer with solid state controls and barometric relief dampers includes filter racks and provide outdoor air during cooling and reduce compressor operation.		X
Electric Heaters	Electric Heat Supplement		X
Filter Rack	Filter Rack features easy installation, serviceability, and high–filtering performance for vertical applications. Includes 1–in. (25 mm) filter.		X
Flat Roof Curb	14–in. (356 mm) Flat Roof Curb is available for roof mounted applications.		X
Low Ambient Kit	Low Ambient Kit (Motormaster II Control) allows the use of mechanical cooling down to outdoor temperatures as low as 0°F (–18°C) when properly installed.		X
Louver Metal Outdoor Coil Grilles	Louver Metal Outdoor Coil Grilles provides hail and vandalism protection.		X
Manual Outside Air Damper	Manual Outside Air Damper includes hood and filter rack with adjustable damper blade for up to 25% outdoor air.		X
Square–to–Round Duct Transition Kit	Square–to–Round Duct Transition Kit enable 24–48 size units to be fitted to 14 in. (356 mm) round ductwork.		X
Curb Adapter	Adapter curb for new unit with base rail installed on existing curb		X
Gasket Kit	For field modified existing roof curb with new base rail unit.		X

*Refer to Price Page for application detail.

ELECTRIC HEATERS

ORDERING NO.	NOMINAL CAPACITY (kW @ 240 or 480 VOLTS)	USED WITH SIZES				
		30	36	42	48	60
208/230 – THREE PHASE – 60 HZ						
CPHEATER055A00	5.0	X	X	X	X	X
CPHEATER056A00	10.0	X	X	X	X	
CPHEATER068A00	10.0	X	X	X	X	X
CPHEATER058A00	15.0	X	X	X	X	X
CPHEATER059A01	20.0			X	X	X
460 – THREE PHASE – 60 HZ						
CPHEATER060A00	5.0		X	X	X	X
CPHEATER061A00	10.0		X	X	X	X
CPHEATER062A00	15.0		X	X	X	X
CPHEATER063A00	20.0			X	X	X

NOTE: Electric heaters are rated at 240v. Refer to Multiplication Factors table for other voltages.
X = Approved combination

Minimum Airflow for Reliable Electric Heater Operation (CFM)

SIZE	PH3G--A30	PH3G--A36	PH3G--A42	PH3G--A48	PH3G--A60
AIRFLOW (CFM)	1025	1250	1400	1710	1800

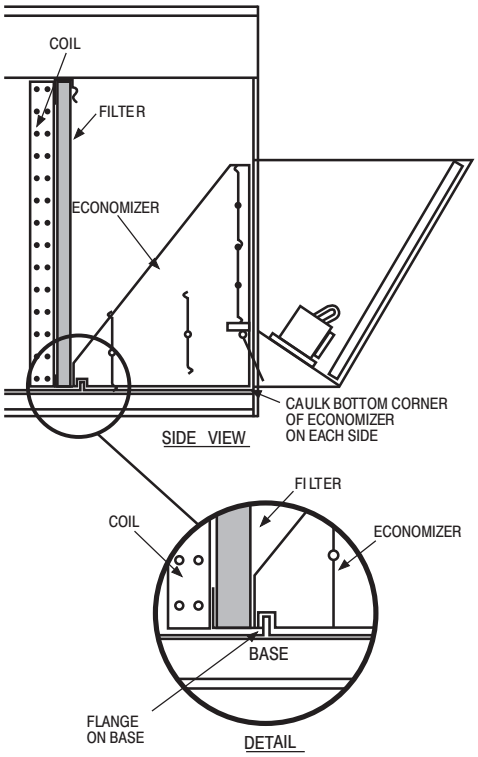

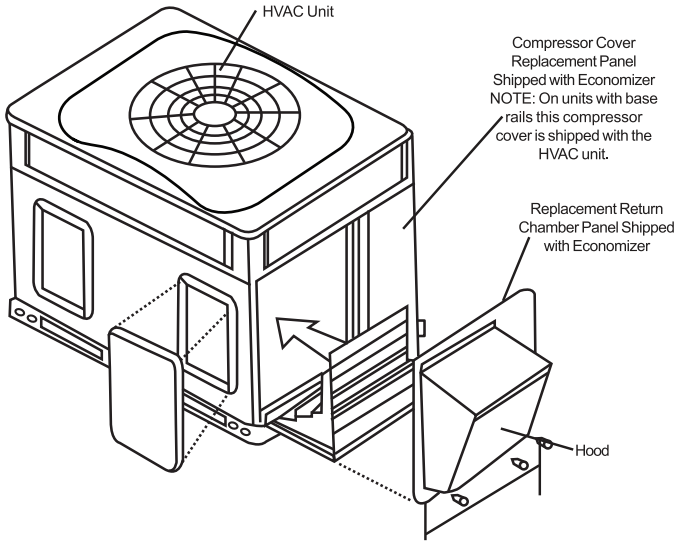

Vertical Economizer

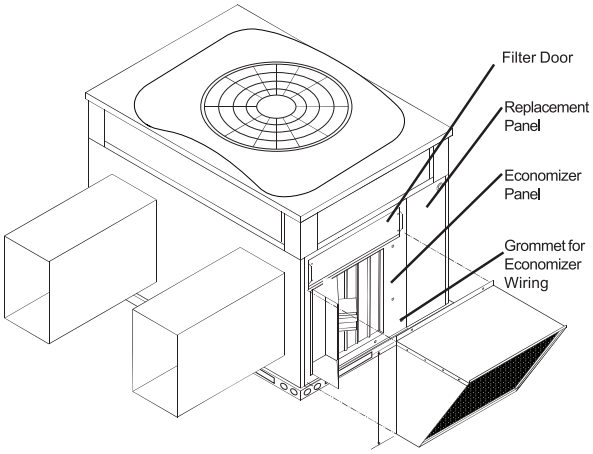

Horizontal Economizer

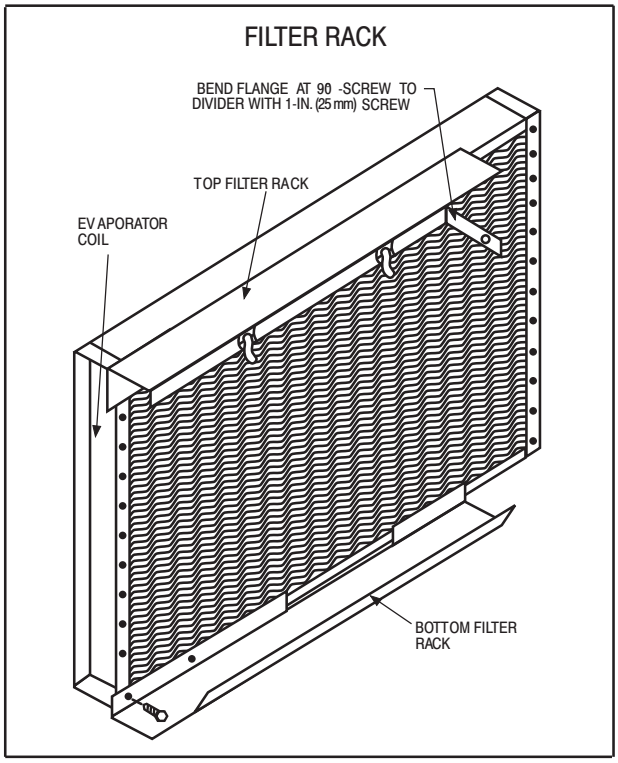

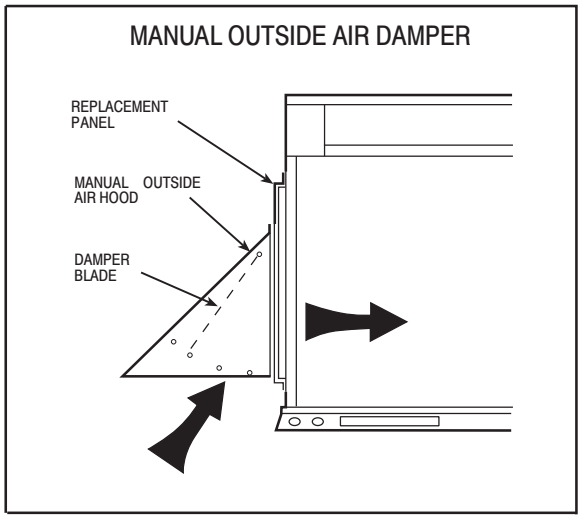

A09421

UNIT DIMENSIONS - PH3G--A30-36

UNIT	ELECTRICAL CHARACTERISTICS	UNIT WT.		UNIT HEIGHT IN/MM		CENTER OF GRAVITY IN/MM					
		LB	KG	"A"		X		Y		Z	
PH3GPAA30000AA	208/230-3-60	332	150.7	42-1/8	1070	19-3/4	501.7	14-3/4	374.7	17-7/8	454.0
PH3GPAA36000AA	208/230-3-60	336	152.3	42-1/8	1070	19-3/4	501.7	14-3/4	374.7	18	457.2
PH3GEAA36000AA	460-3-60	350	158.6	42-1/8	1070	19-3/4	501.7	14-3/4	374.7	18-1/2	469.9

UNITS	VOLTAGE	CORNER WEIGHT LB/KG							
		"1"		"2"		"3"		"4"	
PH3GPAA30000AA	208/230	66.5	30.2	53.2	24.1	79.7	36.2	132.9	60.3
PH3GPAA36000AA	208/230	67.2	30.5	53.7	24.4	80.6	36.6	134.3	61.0
PH3GEAA36000AA	460	67.2	30.5	53.7	24.4	89.6	40.7	139.3	63.2

NOTE: ALL TABLE DATA RELEVANT FOR ALL FACTORY INSTALLED OPTIONS EXCEPT ECONOMIZER

REQUIRED CLEARANCES TO COMBUSTIBLE MATL.

	INCHES [MM]
TOP OF UNIT	14 [355.6]
DUCT SIDE OF UNIT	2 [50.8]
SIDE OPPOSITE DUCTS	14 [355.6]
BOTTOM OF UNIT	0 [0.0]
ELECTRICAL PANEL	36 [914.4]

NEC. REQUIRED CLEARANCES.

	INCHES [MM]
BETWEEN UNITS, POWER ENTRY SIDE	42 [1066.8]
UNIT AND UNGROUNDED SURFACES, POWER ENTRY SIDE	36 [914.0]
UNIT AND BLOCK OR CONCRETE WALLS AND OTHER GROUNDED SURFACES, POWER ENTRY SIDE	42 [1066.8]

REQUIRED CLEARANCE FOR OPERATION AND SERVICING

	INCHES [MM]
EVAP. COIL ACCESS SIDE	36 [914.0]
POWER ENTRY SIDE	42 [1066.8]
(EXCEPT FOR NEC REQUIREMENTS)	
UNIT TOP	48 [1219.2]
SIDE OPPOSITE DUCTS	36 [914.0]
DUCT PANEL	12 [304.8]*

*MINIMUM DISTANCES:IF UNIT IS PLACED LESS THAN 12 [304.8] FROM WALL SYSTEM,THEN SYSTEM PERFORMANCE MAYBE COMPROMISED.

DIMENSIONS IN [] ARE IN MM

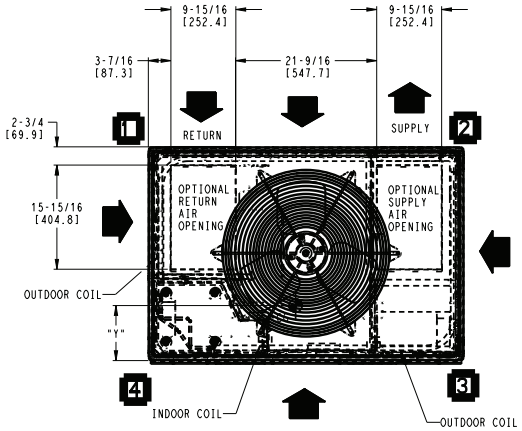

TOP VIEW

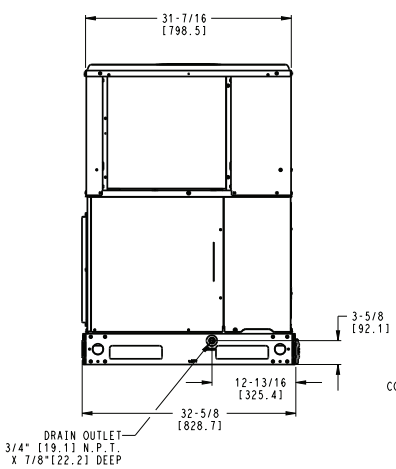

LEFT SIDE VIEW

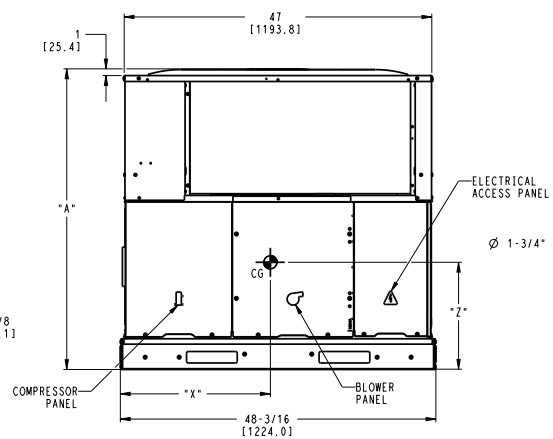

FRONT VIEW

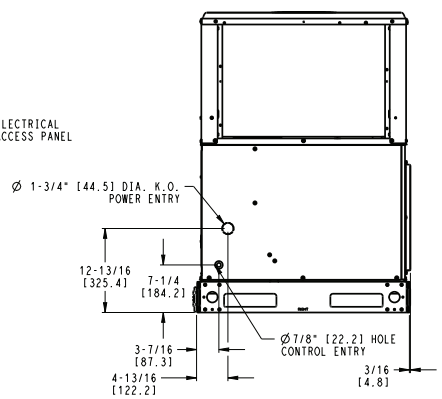

RIGHT SIDE VIEW

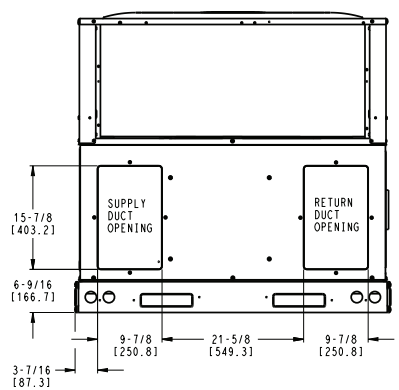

REAR VIEW

50EZ500508	REV B

PH3G--A

A150591

UNIT DIMENSIONS - PH3G--A42-60

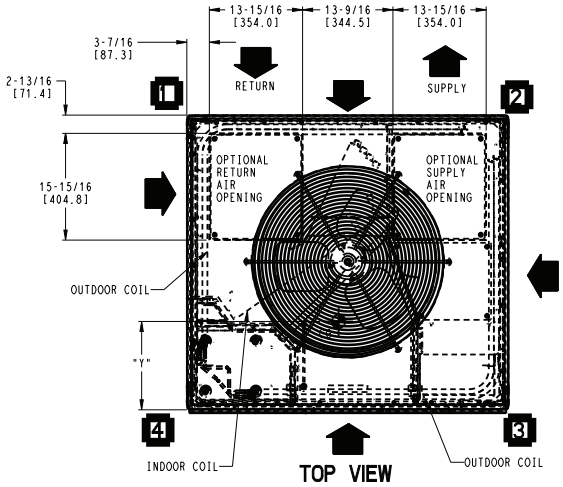

UNIT	ELECTRICAL CHARACTERISTICS	UNIT WT.		UNIT HEIGHT IN/MM		CENTER OF GRAVITY IN/MM					
		LB	KG	"A"		X		Y		Z	
PH3GPAA42000AA	208/230-3-60	411	186.3	44-3/4	1137	19-1/2	495.3	16-1/2	419.1	17	431.8
PH3GEAA42000AA	460-3-60	425	192.7	44-3/4	1137	19-1/2	495.3	16-1/2	419.1	17	431.8
PH3GPAA48000AA	208/230-3 60	429	194.7	44-3/4	1137	19-1/2	495.3	16-1/2	419.1	17	431.8
PH3GEAA48000AA	460-3-60	443	201.1	44-3/4	1137	19-1/2	495.3	16-1/2	419.1	17	431.8
PH3GPAA60000AA	208/230-3-60	454	206.0	48-3/4	1238	19-1/2	495.3	16-1/2	419.1	18	457.2
PH3GEAA60000AA	460-3-60	468	212.4	48-3/4	1238	19-1/2	495.3	16-1/2	419.1	18	457.2

UNITS	VOLTAGE	CORNER WEIGHT LB/KG							
		"1"		"2"		"3"		"4"	
PH3GPAA42000AA	208/230	82.1	37.3	65.7	29.8	98.6	44.8	164.3	74.6
PH3GEAA42000AA	460	82.1	37.3	65.7	29.8	107.6	48.8	169.3	76.9
PH3GPAA48000AA	208/230	85.8	39.0	68.7	31.2	103.0	46.8	171.7	77.9
PH3GEAA48000AA	460	85.8	39.0	68.7	31.2	112.0	50.9	176.7	80.2
PH3GPAA60000AA	208/230	90.8	41.2	72.7	33.0	109.0	49.5	181.7	82.5
PH3GEAA60000AA	460	90.8	41.2	72.7	33.0	118.0	53.6	186.7	84.8

NOTE: ALL TABLE DATA RELEVANT FOR ALL FACTORY INSTALLED OPTIONS EXCEPT ECONOMIZER

REQUIRED CLEARANCES TO COMBUSTIBLE MATL.

	INCHES [MM]
TOP OF UNIT	14 [355.6]
DUCT SIDE OF UNIT	2 [50.8]
SIDE OPPOSITE DUCTS	14 [355.6]
BOTTOM OF UNIT	0 [0.0]
ELECTRICAL PANEL	36 [914.4]

NEC. REQUIRED CLEARANCES.

	INCHES [MM]
BETWEEN UNITS, POWER ENTRY SIDE	42 [1066.8]
UNIT AND UNGROUNDED SURFACES, POWER ENTRY SIDE	36 [914.0]
UNIT AND BLOCK OR CONCRETE WALLS AND OTHER GROUNDED SURFACES, POWER ENTRY SIDE	42 [1066.8]

REQUIRED CLEARANCE FOR OPERATION AND SERVICING

	INCHES [MM]
EVAP. COIL ACCESS SIDE	36 [914.0]
POWER ENTRY SIDE	42 [1066.8]
(EXCEPT FOR NEC REQUIREMENTS)	
UNIT TOP	48 [1219.2]
SIDE OPPOSITE DUCTS	36 [914.0]
DUCT PANEL	12 [304.8]*

*MINIMUM DISTANCES:IF UNIT IS PLACED LESS THAN 12 [304.8] FROM WALL SYSTEM,THEN SYSTEM PERFORMANCE MAYBE COMPROMISED.

DIMENSIONS IN [] ARE IN MM

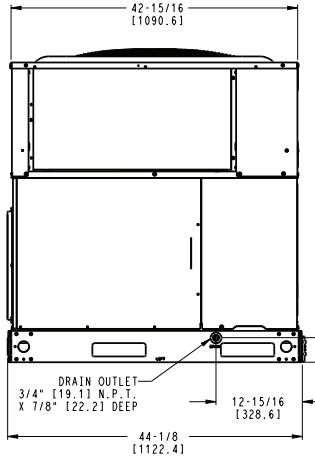

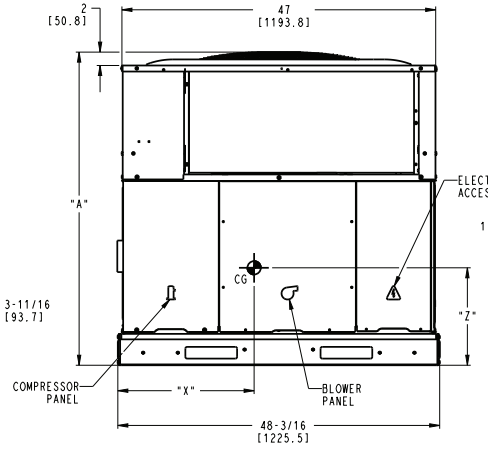

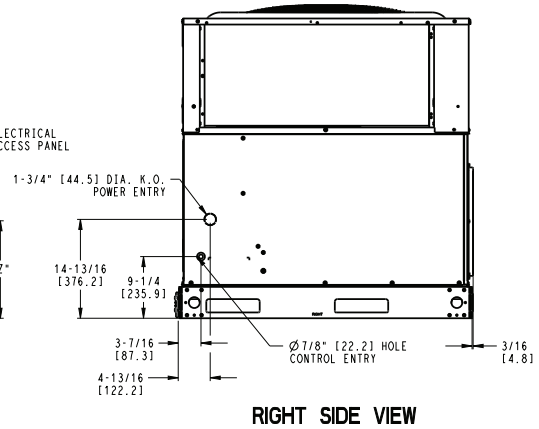

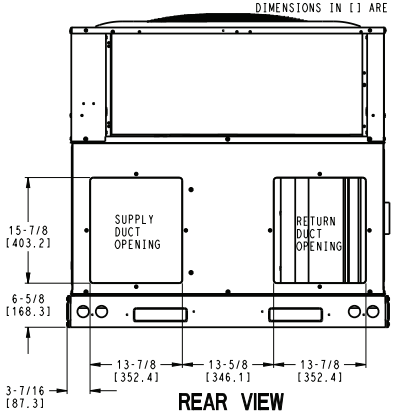

50EZ500509	REV B

A150592

ROOF CURB ACCESSORY DIMENSIONS

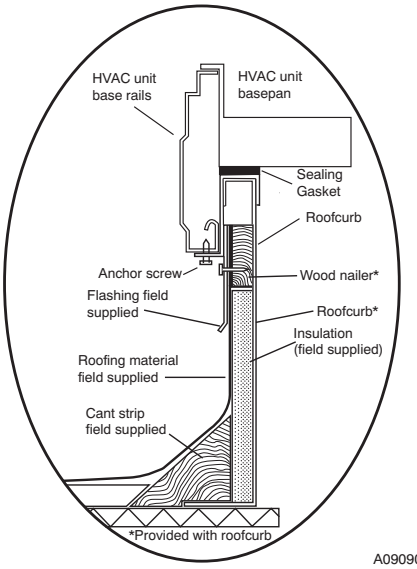

ROOF CURB DETAIL

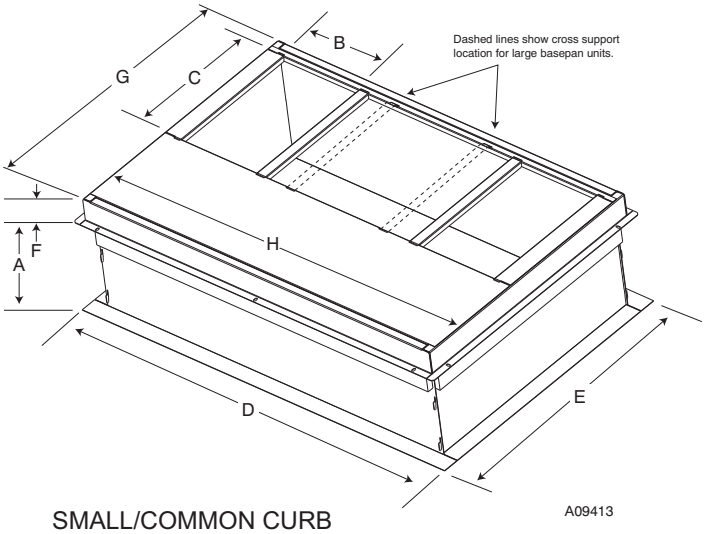

SMALL/COMMON CURB

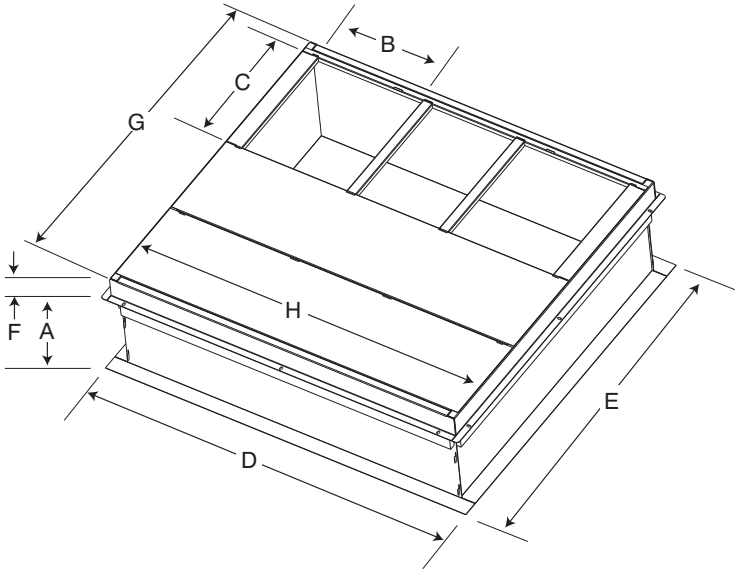

LARGE CURB

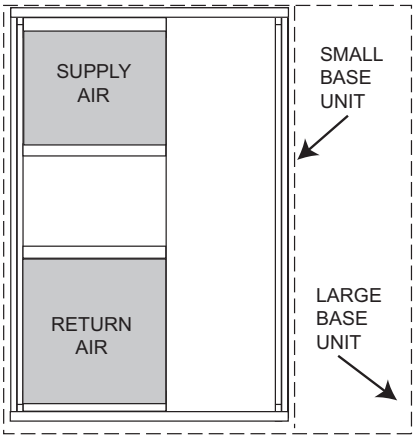

UNIT PLACEMENT ON COMMON CURB

A09094

SMALL OR LARGE BASE UNIT

A09414

UNIT SIZE	CATALOG NUMBER	A IN. (mm)	B (small/common base) IN. (mm)*	B (large base) IN. (mm)*	C IN. (mm)	D IN. (mm)	E IN. (mm)	F IN. (mm)	G IN. (mm)	H IN. (mm)
Small or Large	CPRFCURB011A00	14 (356)	10 (254)	14 (356)	16 (406)	47.8 (1214)	32.4 (822)	2.7 (69)	30.6 (778)	46.1 (1170)
Large	CPRFCURB013A00	14 (356)	14 (356)				43.9 (1116)		42.2 (1072)	

* Part Number CPRCURB011A00 can be used on both small and large basepan units. The cross supports must be located based on whether the unit is a small basepan or a large basepan.

NOTES:

1. Roof curb must be set up for unit being installed.
2. Seal strip must be applied, as required, to unit being installed.
3. Roof curb is made of 16-gauge steel.
4. Attach ductwork to curb (flanges of duct rest on curb).
5. Insulated panels: 1-in. (25.4 mm) thick fiberglass 1 lb. density.

SELECTION PROCEDURE (WITH EXAMPLE)

1. Determine cooling and heating requirements at design conditions:

Given:

Required Cooling Capacity (TC)	34,500 Btuh
Sensible Heat Capacity (SHC)	26,000 Btuh
Required Heating Capacity	60,000 Btuh
Condenser Entering Air Temperature	95°F (35°C)
Indoor-Air Temperature	80°F (27°C) edb 67°F (19°C) ewb
Evaporator Air Quantity	1200 CFM
External Static Pressure	0.200 IN.W.C.
Electrical Characteristics	208-3-60

2. Select unit based on required cooling capacity.

Enter Net Cooling Capacities table at condenser entering temperature of 95°F (35°C). Unit 036 at 1200 cfm and 67°F (19°C) ewb (entering wet bulb) will provide a total capacity of 35,000 Btuh and a SHC of 26,200 Btuh. Calculate SHC correction, if required, using Note 4 under Cooling Capacities tables.

3. Select heating capacity of unit to provide design condition requirement.

In the Heating Capacities and Efficiencies table, note that the 36 size unit will deliver 35,000 BTUH at the AHRI high temp rating point. To achieve 60,000 BTUH, accessory electric heat will be required. Use the Balance Point Worksheet to plot the load line with the unit capacity. The difference between the load line and unit capacity at the design heating temperature is the amount of electric heat that will be required.

4. Determine fan speed and power requirements at design conditions.

Before entering the air delivery tables, calculate the total static pressure required. From the given example, the Wet Coil Pressure Drop Table, and the Filter Pressure Drop Table:

External Static Pressure	0.200 IN. W.C.
Filter	0.130 IN. W.C.
Wet Coil Pressure Drop	0.18 IN. W.C.
Total Static Pressure	0.51 IN. W.C.

Enter the table for Dry Coil Air Delivery— At 0.50 IN. W.C. ESP (external static pressure) and MEDIUM speed the motor delivers 1209 CFM.

5. Select unit that corresponds to power source available.

The Electrical Data Table shows that the unit is designed to operate at 208/230-3-60.

PERFORMANCE DATA

30 Cooling Extended Performance Table

EVAPORATOR AIR		CONDENSER ENTERING AIR TEMPERATURES °F (°C)																	
		75 (23.9)			85 (29.4)			95 (35)			105 (40.5)			115 (46.1)			125 (51.7)		
CFM / BF	EWB °F (°C)	Capacity MBtuh Total	Capacity MBtuh Sens	Total Sys KW	Capacity MBtuh Total	Capacity MBtuh Sens	Total Sys KW	Capacity MBtuh Total	Capacity MBtuh Sens	Total Sys KW	Capacity MBtuh Total	Capacity MBtuh Sens	Total Sys KW	Capacity MBtuh Total	Capacity MBtuh Sens	Total Sys KW	Capacity MBtuh Total	Capacity MBtuh Sens	Total Sys KW
875 / 0.13	57 (13.9)	27.44	27.44	2.00	26.40	26.40	2.22	25.31	25.31	2.47	24.13	24.13	2.75	22.83	22.83	3.07	21.42	21.42	3.44
	62 (16.7)	28.39	25.49	2.00	27.09	24.83	2.22	25.75	24.11	2.47	24.34	23.30	2.75	22.88	22.88	3.07	21.45	21.45	3.44
	63* (17.2)	28.86	20.79	2.00	27.53	20.17	2.22	26.13	19.52	2.47	24.63	18.84	2.75	23.00	18.09	3.07	21.25	17.29	3.44
	67 (19.4)	31.27	21.73	2.02	29.83	21.10	2.24	28.33	20.46	2.49	26.73	19.77	2.76	25.00	19.04	3.08	23.14	18.24	3.45
	72 (13.9)	34.57	17.68	2.04	32.97	17.10	2.26	31.32	16.50	2.51	29.56	15.87	2.79	27.68	15.20	3.10	25.66	14.44	3.46
1000 / 0.17	57 (13.9)	28.78	28.78	2.04	27.67	27.67	2.26	26.49	26.49	2.50	25.23	25.23	2.78	23.84	23.84	3.11	22.33	22.33	3.47
	62 (16.7)	29.25	27.45	2.04	27.91	26.71	2.26	26.55	26.55	2.50	25.27	25.27	2.79	23.88	23.88	3.11	22.37	22.37	3.47
	63* (17.2)	29.64	22.24	2.04	28.24	21.59	2.26	26.76	20.92	2.51	25.20	20.20	2.78	23.51	19.42	3.10	21.69	18.56	3.47
	67 (19.4)	32.09	23.29	2.05	30.58	22.64	2.28	29.00	21.96	2.52	27.32	21.25	2.80	25.54	20.48	3.12	23.60	19.64	3.48
	72 (13.9)	35.47	18.74	2.08	33.78	18.14	2.30	32.02	17.52	2.55	30.20	16.83	2.82	28.25	16.11	3.14	26.14	15.32	3.49
1125 / 0.21	57 (13.9)	29.95	29.95	2.07	28.75	28.75	2.29	27.50	27.50	2.54	26.15	26.15	2.82	24.69	24.69	3.14	23.10	23.10	3.51
	62 (16.7)	30.03	30.03	2.07	28.81	28.81	2.30	27.55	27.55	2.54	26.20	26.20	2.82	24.73	24.73	3.14	23.14	23.14	3.51
	63* (17.2)	30.27	23.63	2.07	28.80	22.96	2.29	27.27	22.26	2.54	25.65	21.50	2.82	23.91	20.68	3.14	22.05	19.77	3.50
	67 (19.4)	32.74	24.80	2.09	31.17	24.11	2.31	29.54	23.41	2.56	27.80	22.67	2.83	25.95	21.86	3.15	23.97	20.96	3.51
	72 (13.9)	36.13	19.76	2.11	34.40	19.10	2.34	32.60	18.43	2.58	30.70	17.73	2.86	28.69	16.98	3.17	26.51	16.17	3.53

*At 75°F (23.9 °C) entering dry bulb—Tennessee Valley Authority [TVA] rating conditions; all others at 80°F (26.7 °C) entering dry bulb. See Legend and Notes.

30 Heating Extended Performance Table -10-60 (-23.3-15.6°C)

INDOOR AIR		OUTDOOR COIL ENTERING AIR TEMPERATURES °F (°C)																							
		−10 (−23.3)			0 (−17.8)			10 (−12.2)			20 (−6.7)			30 (−1.1)			40 (4.4)			50 (10)			60 (15.6)		
EDB °F (°C)	CFM	Capacity MBtuh Total	Capacity MBtuh Integ	Total Sys KW	Capacity MBtuh Total	Capacity MBtuh Integ	Total Sys KW	Capacity MBtuh Total	Capacity MBtuh Integ	Total Sys KW	Capacity MBtuh Total	Capacity MBtuh Integ	Total Sys KW	Capacity MBtuh Total	Capacity MBtuh Integ	Total Sys KW	Capacity MBtuh Total	Capacity MBtuh Integ	Total Sys KW	Capacity MBtuh Total	Capacity MBtuh Integ	Total Syst em KW	Capacity MBtuh Total	Capacity MBtuh Integ	Total Syst em KW
65	875	8.58	7.89	1.91	11.60	10.67	1.98	14.83	13.61	2.04	18.37	16.66	2.12	22.35	19.58	2.21	26.08	26.08	2.29	30.29	30.29	2.39	35.28	35.28	2.52
	1000	8.75	8.05	1.92	11.81	10.87	1.99	15.07	13.83	2.05	18.71	16.97	2.11	22.60	19.80	2.19	26.39	26.39	2.26	30.70	30.70	2.35	35.83	35.83	2.47
	1125	8.92	8.20	1.95	11.99	11.04	2.00	15.28	14.02	2.06	19.32	17.52	2.12	22.81	19.98	2.18	26.65	26.65	2.24	31.04	31.04	2.32	36.29	36.29	2.43
70	875	8.06	7.42	1.98	11.12	10.23	2.06	14.37	13.19	2.13	17.90	16.23	2.21	22.07	19.33	2.31	25.74	25.74	2.40	29.87	29.87	2.50	34.73	34.73	2.64
	1000	8.24	7.58	2.00	11.33	10.42	2.07	14.62	13.42	2.14	18.19	16.49	2.20	22.30	19.54	2.29	26.03	26.03	2.36	30.27	30.27	2.46	35.27	35.27	2.58
	1125	8.40	7.73	2.02	11.51	10.59	2.09	14.83	13.61	2.15	18.43	16.71	2.21	22.51	19.72	2.28	26.29	26.29	2.35	30.57	30.57	2.43	35.70	35.70	2.54
75	875	7.50	6.90	2.06	10.60	9.76	2.15	13.88	12.74	2.22	17.41	15.79	2.31	21.72	19.03	2.42	25.38	25.38	2.51	29.46	29.46	2.62	34.18	34.18	2.75
	1000	7.68	7.06	2.08	10.81	9.95	2.16	14.13	12.97	2.23	17.69	16.05	2.30	21.99	19.27	2.40	25.68	25.68	2.48	29.83	29.83	2.57	34.70	34.70	2.69
	1125	7.84	7.21	2.11	11.00	10.12	2.18	14.34	13.16	2.24	17.94	16.27	2.30	22.21	19.46	2.39	25.93	25.93	2.46	30.13	30.13	2.54	35.14	35.14	2.66

PERFORMANCE DATA (CONT)

36 Cooling Extended Performance Table

EVAPORATOR AIR		CONDENSER ENTERING AIR TEMPERATURES °F (°C)																	
		75 (23.9)			85 (29.4)			95 (35)			105 (40.5)			115 (46.1)			125 (51.7)		
CFM / BF	EWB °F (°C)	Capacity MBtuh Total	Capacity MBtuh Sens	Total Sys KW	Capacity MBtuh Total	Capacity MBtuh Sens	Total Sys KW	Capacity MBtuh Total	Capacity MBtuh Sens	Total Sys KW	Capacity MBtuh Total	Capacity MBtuh Sens	Total Sys KW	Capacity MBtuh Total	Capacity MBtuh Sens	Total Sys KW	Capacity MBtuh Total	Capacity MBtuh Sens	Total Sys KW
1050 / 0.12	57 (13.9)	33.59	33.59	2.41	32.25	32.25	2.67	30.82	30.82	2.96	29.24	29.24	3.28	27.50	27.50	3.66	25.58	25.58	4.08
	62 (16.7)	34.77	30.70	2.42	33.10	29.87	2.67	31.33	28.94	2.96	29.46	27.90	3.29	27.56	27.56	3.66	25.62	25.62	4.08
	63* (17.2)	35.34	25.01	2.42	33.64	24.23	2.68	31.81	23.40	2.96	29.83	22.52	3.29	27.67	21.55	3.66	25.33	20.50	4.08
	67 (19.4)	38.13	26.06	2.44	36.31	25.28	2.70	34.33	24.46	2.99	32.20	23.57	3.31	29.86	22.59	3.68	27.36	21.54	4.10
	72 (13.9)	41.96	21.04	2.47	39.94	20.31	2.74	37.75	19.54	3.03	35.39	18.70	3.35	32.82	17.81	3.71	30.05	16.85	4.12
1200 / 0.18	57 (13.9)	35.11	35.11	2.47	33.69	33.69	2.73	32.14	32.14	3.02	30.45	30.45	3.34	28.57	28.57	3.71	26.49	26.49	4.14
	62 (16.7)	35.71	33.01	2.47	33.97	32.07	2.73	32.20	32.20	3.02	30.50	30.50	3.34	28.61	28.61	3.71	26.53	26.53	4.14
	63* (17.2)	36.21	26.69	2.47	34.40	25.89	2.73	32.47	25.03	3.02	30.40	24.10	3.34	28.14	23.09	3.71	25.72	21.97	4.13
	67 (19.4)	38.99	27.86	2.50	37.07	27.06	2.76	35.00	26.20	3.04	32.76	25.27	3.37	30.32	24.25	3.73	27.71	23.14	4.15
	72 (13.9)	42.86	22.23	2.53	40.74	21.48	2.79	38.42	20.68	3.08	35.93	19.82	3.40	33.26	18.85	3.76	30.40	17.82	4.17
1350 / 0.24	57 (13.9)	36.41	36.41	2.52	34.89	34.89	2.78	33.23	33.23	3.07	31.42	31.42	3.40	29.41	29.41	3.77	27.22	27.22	4.19
	62 (16.7)	36.54	36.49	2.53	34.95	34.95	2.79	33.28	33.28	3.07	31.47	31.47	3.40	29.45	29.45	3.77	27.25	27.25	4.19
	63* (17.2)	36.85	28.29	2.53	34.96	27.46	2.78	32.97	26.58	3.07	30.82	25.61	3.39	28.48	24.53	3.76	26.00	23.34	4.18
	67 (19.4)	39.63	29.59	2.55	37.64	28.75	2.81	35.49	27.86	3.10	33.16	26.89	3.42	30.65	25.82	3.78	27.98	24.63	4.20
	72 (13.9)	43.50	23.36	2.58	41.27	22.59	2.85	38.89	21.74	3.13	36.32	20.81	3.45	33.56	19.82	3.82	30.62	18.76	4.22

*At 75°F (23.9 °C) entering dry bulb—Tennessee Valley Authority [TVA] rating conditions; all others at 80°F (26.7 °C) entering dry bulb. See Legend and Notes.

36 Heating Extended Performance Table -10-60 (-23.3-15.6°C)

INDOOR AIR		OUTDOOR COIL ENTERING AIR TEMPERATURES °F (°C)																							
		−10 (−23.3)			0 (−17.8)			10 (−12.2)			20 (−6.7)			30 (−1.1)			40 (4.4)			50 (10)			60 (15.6)		
EDB °F (°C)	CFM	Capacity MBtuh Total	Capacity MBtuh Integ	Total Sys KW	Capacity MBtuh Total	Capacity MBtuh Integ	Total Sys KW	Capacity MBtuh Total	Capacity MBtuh Integ	Total Sys KW	Capacity MBtuh Total	Capacity MBtuh Integ	Total Sys KW	Capacity MBtuh Total	Capacity MBtuh Integ	Total Sys KW	Capacity MBtuh Total	Capacity MBtuh Integ	Total Sys KW	Capacity MBtuh Total	Capacity MBtuh Integ	Total Sys KW	Capacity MBtuh Total	Capacity MBtuh Integ	Total Sys KW
65	1050	12.15	11.18	2.30	15.31	14.08	2.39	19.19	17.61	2.49	22.68	20.57	2.58	26.68	23.38	2.68	31.28	31.28	2.80	36.70	36.70	2.96	42.99	42.99	3.16
	1200	12.38	11.39	2.32	15.57	14.32	2.40	19.41	17.82	2.50	22.96	20.82	2.58	27.01	23.66	2.67	31.68	31.68	2.78	37.20	37.20	2.94	43.06	43.06	3.12
	1350	12.59	11.58	2.35	15.79	14.53	2.43	19.62	18.01	2.52	23.19	21.03	2.59	27.29	23.91	2.67	32.01	32.01	2.78	37.51	37.51	2.93	42.82	42.82	3.10
70	1050	11.71	10.77	2.41	14.88	13.69	2.50	18.76	17.22	2.61	22.39	20.31	2.70	26.32	23.06	2.80	30.81	30.81	2.93	36.14	36.14	3.09	42.42	42.42	3.31
	1200	11.94	10.99	2.44	15.13	13.93	2.52	19.13	17.55	2.62	22.65	20.54	2.70	26.63	23.34	2.79	31.21	31.21	2.91	36.62	36.62	3.06	42.62	42.62	3.25
	1350	12.15	11.18	2.47	15.37	14.14	2.54	19.35	17.76	2.64	22.88	20.75	2.71	26.91	23.58	2.80	31.54	31.54	2.91	37.00	37.00	3.06	42.49	42.49	3.24
75	1050	11.23	10.33	2.53	14.42	13.27	2.62	18.01	16.53	2.72	22.09	20.03	2.84	25.96	22.75	2.94	30.36	30.36	3.06	35.58	35.58	3.23	41.77	41.77	3.46
	1200	11.46	10.55	2.56	14.68	13.51	2.64	18.31	16.81	2.73	22.36	20.27	2.83	26.27	23.02	2.92	30.74	30.74	3.04	36.04	36.04	3.19	42.15	42.15	3.40
	1350	11.67	10.74	2.59	14.91	13.72	2.67	18.61	17.08	2.75	22.59	20.48	2.84	26.53	23.24	2.93	31.07	31.07	3.03	36.43	36.43	3.19	42.11	42.11	3.38

PERFORMANCE DATA (CONT)

42 Cooling Extended Performance Table

EVAPORATOR AIR		CONDENSER ENTERING AIR TEMPERATURES °F (°C)																	
		75 (23.9)			85 (29.4)			95 (35)			105 (40.5)			115 (46.1)			125 (51.7)		
CFM / BF	EWB °F (°C)	Capacity MBtuh Total	Capacity MBtuh Sens	Total Sys KW	Capacity MBtuh Total	Capacity MBtuh Sens	Total Sys KW	Capacity MBtuh Total	Capacity MBtuh Sens	Total Sys KW	Capacity MBtuh Total	Capacity MBtuh Sens	Total Sys KW	Capacity MBtuh Total	Capacity MBtuh Sens	Total Sys KW	Capacity MBtuh Total	Capacity MBtuh Sens	Total Sys KW
1225 / 0.14	57 (13.9)	38.29	38.29	2.70	36.78	36.78	3.00	35.17	35.17	3.35	33.43	33.43	3.76	31.55	31.55	4.23	29.53	29.53	4.78
	62 (16.7)	39.60	35.26	2.71	37.74	34.27	3.01	35.79	33.19	3.36	33.74	32.00	3.76	31.62	31.62	4.24	29.58	29.58	4.78
	63* (17.2)	40.17	28.70	2.72	38.23	27.80	3.02	36.20	26.84	3.37	34.04	25.81	3.77	31.75	24.73	4.24	29.30	23.57	4.77
	67 (19.4)	43.43	29.99	2.76	41.34	29.07	3.07	39.13	28.10	3.42	36.80	27.07	3.83	34.33	25.98	4.30	31.69	24.82	4.85
	72 (13.9)	47.71	24.52	2.83	45.36	23.64	3.14	42.91	22.69	3.50	40.34	21.70	3.91	37.63	20.65	4.40	34.75	19.54	4.95
1400 / 0.17	57 (13.9)	40.11	40.11	2.76	38.48	38.48	3.06	36.73	36.73	3.42	34.85	34.85	3.83	32.83	32.83	4.31	30.65	30.65	4.86
	62 (16.7)	40.77	37.93	2.77	38.83	36.81	3.07	36.82	36.82	3.42	34.91	34.91	3.83	32.88	32.88	4.31	30.69	30.69	4.86
	63* (17.2)	41.23	30.65	2.77	39.19	29.70	3.07	37.04	28.70	3.42	34.77	27.63	3.83	32.38	26.48	4.29	29.83	25.25	4.83
	67 (19.4)	44.54	32.09	2.82	42.33	31.12	3.12	40.00	30.10	3.48	37.55	29.02	3.89	34.97	27.89	4.37	32.23	26.64	4.91
	72 (13.9)	48.87	25.87	2.89	46.39	24.92	3.20	43.82	23.93	3.56	41.13	22.89	3.98	38.30	21.80	4.46	35.30	20.64	5.02
1575 / 0.19	57 (13.9)	41.67	41.67	2.82	39.92	39.92	3.13	38.04	38.04	3.48	36.04	36.04	3.90	33.89	33.89	4.38	31.57	31.57	4.93
	62 (16.7)	41.78	41.78	2.82	40.00	40.00	3.13	38.10	38.10	3.49	36.09	36.09	3.90	33.94	33.94	4.38	31.61	31.61	4.94
	63* (17.2)	42.07	32.53	2.83	39.93	31.53	3.13	37.70	30.48	3.48	35.35	29.35	3.88	32.87	28.13	4.35	30.26	26.81	4.89
	67 (19.4)	45.42	34.11	2.87	43.10	33.11	3.18	40.66	32.04	3.53	38.14	30.89	3.95	35.47	29.68	4.43	32.65	28.36	4.97
	72 (13.9)	49.79	27.12	2.95	47.20	26.14	3.26	44.53	25.11	3.62	41.74	24.03	4.04	38.81	22.90	4.53	35.71	21.70	5.08

*At 75°F (23.9 °C) entering dry bulb—Tennessee Valley Authority [TVA] rating conditions; all others at 80°F (26.7 °C) entering dry bulb. See Legend and Notes.

42 Heating Extended Performance Table -10-60 (-23.3-15.6°C)

INDOOR AIR		OUTDOOR COIL ENTERING AIR TEMPERATURES °F (°C)																							
		−10 (−23.3)			0 (−17.8)			10 (−12.2)			20 (−6.7)			30 (−1.1)			40 (4.4)			50 (10)			60 (15.6)		
EDB °F (°C)	CFM	Capacity MBtuh Total	Capacity MBtuh Integ	Total Sys KW	Capacity MBtuh Total	Capacity MBtuh Integ	Total Sys KW	Capacity MBtuh Total	Capacity MBtuh Integ	Total Sys KW	Capacity MBtuh Total	Capacity MBtuh Integ	Total Sys KW	Capacity MBtuh Total	Capacity MBtuh Integ	Total Sys KW	Capacity MBtuh Total	Capacity MBtuh Integ	Total Sys KW	Capacity MBtuh Total	Capacity MBtuh Integ	Total Sys KW	Capacity MBtuh Total	Capacity MBtuh Integ	Total Sys KW
65	1225	13.54	12.46	2.47	17.47	16.08	2.63	21.96	20.15	2.78	25.98	23.56	2.88	30.54	26.76	2.98	35.78	35.78	3.11	42.01	42.01	3.30	48.77	48.77	3.53
	1400	13.72	12.62	2.48	17.68	16.26	2.64	22.14	20.32	2.77	26.21	23.77	2.86	30.85	27.03	2.95	36.18	36.18	3.07	42.43	42.43	3.24	48.15	48.15	3.46
	1575	13.88	12.77	2.50	17.85	16.43	2.65	22.30	20.47	2.78	26.41	23.95	2.86	31.10	27.25	2.95	36.50	36.50	3.07	42.12	42.12	3.22	47.19	47.19	3.42
70	1225	13.21	12.15	2.61	17.11	15.75	2.77	21.74	19.96	2.92	25.70	23.30	3.02	30.15	26.42	3.12	35.27	35.27	3.25	41.37	41.37	3.44	48.32	48.32	3.70
	1400	13.40	12.33	2.62	17.33	15.95	2.78	21.94	20.14	2.91	25.93	23.52	3.00	30.45	26.68	3.10	35.67	35.67	3.22	41.86	41.86	3.40	47.84	47.84	3.62
	1575	13.57	12.48	2.64	17.52	16.12	2.79	22.13	20.31	2.92	26.14	23.71	3.00	30.72	26.91	3.09	35.97	35.97	3.21	41.84	41.84	3.37	47.03	47.03	3.59
75	1225	12.79	11.77	2.75	16.70	15.37	2.91	21.03	19.31	3.05	25.41	23.05	3.17	29.76	26.07	3.27	34.76	34.76	3.41	40.75	40.75	3.61	47.80	47.80	3.89
	1400	12.99	11.95	2.76	16.93	15.58	2.92	21.59	19.82	3.05	25.64	23.25	3.15	30.06	26.34	3.24	35.15	35.15	3.37	41.24	41.24	3.56	47.49	47.49	3.80
	1575	13.17	12.12	2.79	17.13	15.76	2.93	21.86	20.07	3.06	25.85	23.44	3.15	30.31	26.56	3.23	35.46	35.46	3.35	41.48	41.48	3.53	46.79	46.79	3.76

PERFORMANCE DATA (CONT)

48 Cooling Extended Performance Table

EVAPORATOR AIR		CONDENSER ENTERING AIR TEMPERATURES °F (°C)																	
		75 (23.9)			85 (29.4)			95 (35)			105 (40.5)			115 (46.1)			125 (51.7)		
CFM / BF	EWB °F (°C)	Capacity MBtuh Total	Capacity MBtuh Sens	Total Sys KW	Capacity MBtuh Total	Capacity MBtuh Sens	Total Sys KW	Capacity MBtuh Total	Capacity MBtuh Sens	Total Sys KW	Capacity MBtuh Total	Capacity MBtuh Sens	Total Sys KW	Capacity MBtuh Total	Capacity MBtuh Sens	Total Sys KW	Capacity MBtuh Total	Capacity MBtuh Sens	Total Sys KW
1400 / 0.15	57 (13.9)	45.56	45.56	3.20	43.64	43.64	3.58	41.62	41.62	3.98	39.47	39.47	4.41	37.15	37.15	4.90	34.64	34.64	5.46
	62 (16.7)	47.12	41.32	3.21	44.75	40.06	3.59	42.33	38.74	3.99	39.81	37.27	4.42	37.23	37.23	4.91	34.69	34.69	5.46
	63* (17.2)	47.82	33.66	3.21	45.36	32.52	3.59	42.84	31.34	3.99	40.19	30.11	4.42	37.38	28.81	4.91	34.39	27.41	5.46
	67 (19.4)	51.57	35.10	3.22	48.88	33.93	3.62	46.13	32.74	4.02	43.25	31.49	4.46	40.21	30.17	4.95	36.94	28.75	5.49
	72 (13.9)	56.55	28.57	3.23	53.52	27.50	3.64	50.45	26.34	4.06	47.26	25.12	4.51	43.85	23.83	4.99	40.27	22.48	5.53
1600 / 0.18	57 (13.9)	47.60	47.60	3.26	45.50	45.50	3.65	43.31	43.31	4.05	40.98	40.98	4.49	38.48	38.48	4.98	35.76	35.76	5.53
	62 (16.7)	48.40	44.34	3.26	45.91	42.93	3.65	43.41	43.41	4.05	41.04	41.04	4.49	38.53	38.53	4.98	35.81	35.81	5.53
	63* (17.2)	48.97	35.87	3.27	46.36	34.67	3.65	43.69	33.44	4.05	40.92	32.15	4.49	37.98	30.76	4.97	34.88	29.27	5.52
	67 (19.4)	52.75	37.49	3.27	49.90	36.26	3.68	47.00	35.00	4.09	43.98	33.69	4.52	40.79	32.28	5.01	37.41	30.77	5.55
	72 (13.9)	57.75	30.14	3.28	54.58	28.93	3.70	51.36	27.71	4.13	48.01	26.44	4.57	44.45	25.09	5.06	40.74	23.69	5.59
1800 / 0.21	57 (13.9)	49.32	49.32	3.32	47.06	47.06	3.71	44.71	44.71	4.12	42.23	42.23	4.56	39.55	39.55	5.05	36.65	36.65	5.59
	62 (16.7)	49.55	49.16	3.32	47.14	47.14	3.71	44.77	44.77	4.12	42.28	42.28	4.56	39.60	39.60	5.05	36.70	36.70	5.59
	63* (17.2)	49.85	38.00	3.32	47.12	36.74	3.71	44.35	35.44	4.11	41.47	34.07	4.55	38.44	32.60	5.03	35.24	30.98	5.57
	67 (19.4)	53.64	39.78	3.32	50.67	38.49	3.73	47.66	37.17	4.15	44.52	35.78	4.59	41.22	34.28	5.07	37.75	32.65	5.60
	72 (13.9)	58.69	31.53	3.33	55.39	30.29	3.76	52.04	29.02	4.18	48.54	27.70	4.63	44.88	26.31	5.12	41.06	24.85	5.65

*At 75°F (23.9 °C) entering dry bulb—Tennessee Valley Authority [TVA] rating conditions; all others at 80°F (26.7 °C) entering dry bulb. See Legend and Notes.

48 Heating Extended Performance Table -10-60 (-23.3-15.6°C)

INDOOR AIR		OUTDOOR COIL ENTERING AIR TEMPERATURES °F (°C)																							
		−10 (−23.3)			0 (−17.8)			10 (−12.2)			20 (−6.7)			30 (−1.1)			40 (4.4)			50 (10)			60 (15.6)		
EDB °F (°C)	CFM	Capacity MBtuh Total	Capacity MBtuh Integ	Total Sys KW	Capacity MBtuh Total	Capacity MBtuh Integ	Total Sys KW	Capacity MBtuh Total	Capacity MBtuh Integ	Total Sys KW	Capacity MBtuh Total	Capacity MBtuh Integ	Total Sys KW	Capacity MBtuh Total	Capacity MBtuh Integ	Total Sys KW	Capacity MBtuh Total	Capacity MBtuh Integ	Total Sys KW	Capacity MBtuh Total	Capacity MBtuh Integ	Total Sys KW	Capacity MBtuh Total	Capacity MBtuh Integ	Total Sys KW
65 (18.3)	1400	15.76	14.50	2.95	20.36	18.74	3.07	25.22	23.15	3.20	31.05	28.16	3.36	36.22	31.73	3.50	41.94	41.94	3.65	48.55	48.55	3.83	56.41	56.41	4.05
	1600	16.01	14.73	2.98	20.64	18.99	3.09	25.55	23.46	3.21	31.36	28.44	3.35	36.59	32.06	3.48	42.42	42.42	3.61	49.17	49.17	3.77	57.12	57.12	3.95
	1800	16.24	14.94	3.02	20.90	19.23	3.12	25.85	23.73	3.23	31.63	28.69	3.37	36.92	32.35	3.48	42.84	42.84	3.60	49.72	49.72	3.74	57.48	57.48	3.90
70 (21.1)	1400	15.26	14.04	3.08	19.85	18.27	3.20	24.68	22.65	3.33	30.13	27.32	3.48	35.80	31.37	3.65	41.40	41.40	3.81	47.87	47.87	4.00	55.58	55.58	4.24
	1600	15.52	14.28	3.11	20.14	18.53	3.22	25.04	22.98	3.34	30.99	28.11	3.50	36.16	31.68	3.63	41.87	41.87	3.78	48.48	48.48	3.94	56.38	56.38	4.15
	1800	15.76	14.50	3.15	20.41	18.78	3.25	25.33	23.25	3.36	31.28	28.37	3.51	36.49	31.97	3.63	42.28	42.28	3.76	49.01	49.01	3.91	56.82	56.82	4.09
75 (23.9)	1400	14.68	13.51	3.22	19.29	17.74	3.34	24.12	22.14	3.47	29.34	26.61	3.63	35.38	31.00	3.82	40.85	40.85	3.98	47.21	47.21	4.18	54.77	54.77	4.43
	1600	14.95	13.76	3.25	19.59	18.03	3.36	24.47	22.46	3.48	29.76	26.99	3.62	35.73	31.31	3.79	41.31	41.31	3.94	47.80	47.80	4.12	55.56	55.56	4.35
	1800	15.19	13.98	3.29	19.85	18.27	3.39	24.78	22.74	3.51	30.19	27.38	3.63	36.07	31.60	3.79	41.72	41.72	3.93	48.30	48.30	4.09	56.12	56.12	4.28

PERFORMANCE DATA (CONT)

60 Cooling Extended Performance Table

EVAPORATOR AIR		CONDENSER ENTERING AIR TEMPERATURES °F (°C)																	
		75 (23.9)			85 (29.4)			95 (35)			105 (40.5)			115 (46.1)			125 (51.7)		
CFM / BF	EWB °F (°C)	Capacity MBtuh Total	Capacity MBtuh Sens	Total Sys KW	Capacity MBtuh Total	Capacity MBtuh Sens	Total Sys KW	Capacity MBtuh Total	Capacity MBtuh Sens	Total Sys KW	Capacity MBtuh Total	Capacity MBtuh Sens	Total Sys KW	Capacity MBtuh Total	Capacity MBtuh Sens	Total Sys KW	Capacity MBtuh Total	Capacity MBtuh Sens	Total Sys KW
1750 / 0.19	57 (13.9)	56.42	56.42	3.97	54.09	54.09	4.39	51.60	51.60	4.86	48.89	48.89	5.40	45.87	45.87	6.01	42.60	42.60	6.70
	62 (16.7)	58.00	51.82	3.99	55.15	50.34	4.40	52.19	48.67	4.87	49.10	48.72	5.40	45.94	45.94	6.01	42.66	42.66	6.70
	63* (17.2)	58.78	42.05	4.00	55.87	40.69	4.41	52.77	39.25	4.88	49.45	37.72	5.41	45.84	36.06	6.01	42.01	34.26	6.69
	67 (19.4)	63.34	43.86	4.05	60.17	42.48	4.47	56.78	41.02	4.94	53.14	39.45	5.46	49.23	37.77	6.06	45.09	35.96	6.74
	72 (13.9)	69.39	35.42	4.13	65.81	34.15	4.55	62.02	32.72	5.02	57.99	31.19	5.54	53.69	29.56	6.13	49.14	27.85	6.80
1850 / 0.20	57 (13.9)	56.94	56.94	3.99	54.57	54.57	4.41	52.03	52.03	4.88	49.27	49.27	5.42	46.23	46.23	6.03	42.88	42.88	6.72
	62 (16.7)	58.33	52.61	4.01	55.44	51.08	4.42	52.47	49.35	4.89	49.36	49.36	5.42	46.30	46.30	6.03	42.94	42.94	6.72
	63* (17.2)	59.07	42.62	4.02	56.12	41.24	4.43	53.00	39.80	4.90	49.63	38.25	5.42	45.98	36.56	6.03	42.13	34.74	6.71
	67 (19.4)	63.63	44.47	4.08	60.42	43.08	4.49	57.00	41.60	4.96	53.31	40.02	5.48	49.37	38.31	6.08	45.20	36.48	6.75
	72 (13.9)	69.68	35.83	4.15	66.07	34.51	4.57	62.25	33.07	5.04	58.17	31.52	5.56	53.84	29.88	6.15	49.25	28.16	6.82
2250 / 0.27	57 (13.9)	60.87	60.87	4.19	58.14	58.14	4.61	55.23	55.23	5.08	52.05	52.05	5.62	48.61	48.61	6.22	44.88	44.88	6.90
	62 (16.7)	60.95	60.95	4.19	58.23	58.23	4.61	55.31	55.31	5.08	52.12	52.12	5.62	48.67	48.67	6.22	44.93	44.93	6.90
	63* (17.2)	61.07	47.50	4.19	57.83	46.01	4.61	54.45	44.43	5.07	50.81	42.69	5.60	46.95	40.79	6.19	42.89	38.69	6.87
	67 (19.4)	65.61	49.74	4.25	62.14	48.23	4.67	58.42	46.60	5.13	54.47	44.84	5.66	50.28	42.93	6.25	45.90	40.82	6.92
	72 (13.9)	71.73	39.07	4.33	67.82	37.60	4.75	63.70	36.05	5.21	59.34	34.41	5.74	54.72	32.67	6.32	49.88	30.83	6.98

*At 75°F (23.9 °C) entering dry bulb—Tennessee Valley Authority [TVA] rating conditions; all others at 80°F (26.7 °C) entering dry bulb. See Legend and Notes.

60 Heating Extended Performance Table -10-60 (-23.3-15.6°C)

INDOOR AIR		OUTDOOR COIL ENTERING AIR TEMPERATURES °F (°C)																							
		–10 (–23.3)			0 (–17.8)			10 (–12.2)			20 (–6.7)			30 (–1.1)			40 (4.4)			50 (10)			60 (15.6)		
EDB °F (°C)	CFM	Capacity MBtuh Total	Capacity MBtuh Integ	Total Sys KW	Capacity MBtuh Total	Capacity MBtuh Integ	Total Sys KW	Capacity MBtuh Total	Capacity MBtuh Integ	Total Sys KW	Capacity MBtuh Total	Capacity MBtuh Integ	Total Sys KW	Capacity MBtuh Total	Capacity MBtuh Integ	Total Sys KW	Capacity MBtuh Total	Capacity MBtuh Integ	Total Sys KW	Capacity MBtuh Total	Capacity MBtuh Integ	Total Sys KW	Capacity MBtuh Total	Capacity MBtuh Integ	Total Sys KW
65	1750	19.26	17.72	3.62	24.88	22.89	3.77	30.79	28.26	3.91	37.20	33.74	4.06	44.98	39.41	4.26	51.96	51.96	4.43	60.02	60.02	4.64	69.62	69.62	4.91
	1800	19.34	17.79	3.63	24.98	22.98	3.78	30.90	28.37	3.92	37.33	33.85	4.07	45.09	39.50	4.26	52.09	52.09	4.42	60.19	60.19	4.62	69.84	69.84	4.89
	2250	20.06	18.45	3.75	25.74	23.69	3.88	31.75	29.14	4.00	38.31	34.75	4.12	45.93	40.25	4.28	53.12	53.12	4.41	61.48	61.48	4.58	71.51	71.51	4.81
70	1750	18.37	16.90	3.77	24.01	22.09	3.92	30.00	27.54	4.08	36.36	32.98	4.24	44.47	38.96	4.46	51.32	51.32	4.63	59.22	59.22	4.85	68.63	68.63	5.12
	1800	18.45	16.97	3.78	24.11	22.18	3.93	30.11	27.64	4.09	36.49	33.09	4.24	44.58	39.06	4.45	51.43	51.43	4.63	59.39	59.39	4.83	68.85	68.85	5.10
	2250	19.15	17.62	3.90	24.92	22.93	4.04	30.96	28.41	4.17	37.44	33.95	4.30	45.42	39.80	4.47	52.45	52.45	4.61	60.65	60.65	4.79	70.47	70.47	5.02
75	1750	17.44	16.04	3.93	23.12	21.27	4.09	29.18	26.78	4.26	35.57	32.26	4.43	43.08	37.74	4.63	50.66	50.66	4.85	58.44	58.44	5.07	67.67	67.67	5.35
	1800	17.52	16.12	3.94	23.22	21.36	4.10	29.28	26.88	4.27	35.70	32.37	4.43	43.34	37.97	4.64	50.78	50.78	4.84	58.60	58.60	5.05	67.87	67.87	5.33
	2250	18.19	16.73	4.06	23.99	22.07	4.21	30.13	27.65	4.35	36.62	33.21	4.48	44.87	39.31	4.68	51.79	51.79	4.82	59.83	59.83	5.00	69.45	69.45	5.24

LEGEND

BF	— Bypass Factor
edb	— Entering Dry–Bulb
Ewb	— Entering Wet–Bulb
kW	— Total Unit Power Input
SHC	— Sensible Heat Capacity (1000 Btuh)
TC	— Total Capacity (1000 Btuh) (net)
rh	—Relative Humidity

COOLING NOTES:

1. Ratings are net; they account for the effects of the evaporator–fan motor power and heat.
2. Direct interpolation is permissible. Do not extrapolate.
3. The following formulas may be used:

$$t_{ldb} = t_{edb} - \frac{\text{Sensible capacity (Btuh)}}{1.10 \times \text{cfm}}$$

t_{lwb} = Wet–bulb temperature corresponding to enthalpy air leaving evaporator coil (h_{lwb})

$$h_{lwb} = h_{ewb} - \frac{\text{total capacity (Btuh)}}{4.5 \times \text{cfm}}$$

Where: h_{ewb} = Enthalpy of air entering evaporator coil

4. The SHC is based on 80°F (26.7 °C) edb temperature of air entering evaporator coil. Below 80°F (26.7°C) edb, subtract (corr factor x cfm) from SHC. Above 80°F (26.7°C) edb, add (corr factor x cfm) to SHC. Correction Factor = 1.10 x (1 + BF) x (edb – 80).

5. Integrated capacity is maximum (instantaneous) capacity less the effect of frost on the outdoor coil and the heat required to defrost it.

PERFORMANCE DATA (CONT)

Multiplication Factors

HEATER kW RATING	VOLTAGE DISTRIBUTION	MULTIPLICATION FACTOR
240	200	0.69
	208	0.75
	230	0.92
	240	1.00
480	460	0.92

Dry Coil Air Delivery* - Horizontal - Unit PH3G--A30-60 Series A

UNIT	MOTOR SPEED	WIRE COLOR		EXTERNAL STATIC PRESSURE (IN. W.C.)								
				0.1	0.2	0.3	0.4	0.5	0.6	0.7	0.8	0.9
PH3G--A30	Low	Blue	CFM	741	638	547	415	---	---	---	---	---
	Med–Low	Pink	CFM	973	887	823	733	665	538	451	---	---
	Medium	Red	CFM	1088	1023	954	881	800	723	658	563	461
	Med–High[1]	Orange	CFM	1140	1064	996	915	840	758	687	564	480
	High	Black	CFM	1202	1140	1082	1015	961	881	810	732	631
PH3G--A36	Low	Blue	CFM	1234	1168	1093	1021	961	894	825	759	687
	Med–Low	Pink	CFM	1290	1223	1154	1090	1027	977	894	828	762
	Medium[1]	Red	CFM	1354	1290	1226	1158	1102	1046	981	918	843
	Med–High	Orange	CFM	1606	1546	1489	1430	1371	1316	1258	1208	1140
	High	Black	CFM	1630	1580	1517	1463	1407	1339	1277	1210	1131
PH3G--A42	Low	Blue	CFM	1295	1234	1182	1126	1075	1016	955	898	857
	Med–Low	Pink	CFM	1345	1282	1235	1194	1140	1095	1027	974	921
	Medium	Red	CFM	1505	1452	1413	1358	1323	1282	1234	1169	1130
	Med–High[1]	Orange	CFM	1545	1492	1449	1411	1362	1313	1278	1231	1188
	High	Black	CFM	1705	1643	1607	1568	1518	1483	1448	1404	1360
PH3G--A48	Low	Blue	CFM	1402	1351	1311	1263	1224	1172	1136	1080	1041
	Med–Low	Pink	CFM	1457	1404	1367	1318	1284	1233	1197	1144	1104
	Medium[1]	Red	CFM	1736	1695	1642	1601	1553	1512	1465	1427	1381
	Med–High	Orange	CFM	2149	2111	2062	2026	1980	1945	1905	1864	1793
	High	Black	CFM	2344	2306	2259	2203	2141	2070	1991	1902	1803
PH3G--A60	Low	Blue	CFM	1445	1389	1341	1281	1236	1189	1139	1072	1027
	Med–Low	Pink	CFM	1678	1635	1602	1558	1513	1474	1438	1404	1349
	Medium[1]	Red	CFM	1927	1893	1858	1824	1791	1759	1720	1689	1640
	Med–High	Orange	CFM	2131	2088	2065	2013	1982	1941	1888	1860	1785
	High	Black	CFM	2461	2409	2339	2286	2192	2140	2062	1968	1874

* Air delivery values are without air filter and are for dry coil (See Wet Coil Pressure Drop Table).

[1] Factory–shipped cooling speed

NOTE: Deduct field–supplied air filter pressure drop and wet coil pressure drop to obtain external static pressure available for ducting.

Shaded areas indicate speed/static combinations that are not permitted for dehumidification speed.

NOTE: Deduct 10% for 208 volt operation.

Dry Coil Air Delivery - Downflow Discharge

UNIT	MOTOR SPEED	WIRE COLOR		EXTERNAL STATIC PRESSURE (IN. W.C.)									
				0.10	0.20	0.30	0.40	0.50	0.60	0.70	0.80	0.90	1.0
PH3G--A30	Low	Blue	CFM	756	669	548	457	--	--	--	--	--	--
			WATTS	84	90	96	106	--	--	--	--	--	--
			BHP	0.09	0.10	0.10	0.11	--	--	--	--	--	--
	MedLow	Pink	CFM	1002	928	842	733	660	560	450	--	--	--
			WATTS	144	155	161	173	185	192	203	--	--	--
			BHP	0.15	0.17	0.17	0.19	0.20	0.21	0.22	--	--	--
	Medium	Red	CFM	1110	1025	967	879	814	706	611	509	--	--
			WATTS	188	195	205	211	223	236	243	255	--	--
			BHP	0.20	0.21	0.22	0.23	0.24	0.25	0.26	0.27	--	--
	MedHigh[1]	Orange	CFM	1160	1091	1004	945	866	804	699	615	496	--
			WATTS	213	225	232	243	249	261	273	285	291	--
			BHP	0.23	0.24	0.25	0.26	0.27	0.28	0.29	0.31	0.31	--
	High	Black	CFM	1240	1173	1110	1031	966	902	821	726	626	--
			WATTS	254	266	274	284	295	302	315	327	331	--
			BHP	0.27	0.29	0.29	0.30	0.32	0.32	0.34	0.35	0.35	--
PH3G--A36	Low	Blue	CFM	1277	1215	1147	1094	1045	992	932	874	826	757
			WATTS	285	289	299	305	314	319	328	335	347	352
			BHP	0.31	0.31	0.32	0.33	0.34	0.34	0.35	0.36	0.37	0.38
	MedLow	Pink	CFM	1312	1260	1203	1153	1095	1050	995	943	889	829
			WATTS	314	324	329	340	344	355	361	372	382	387
			BHP	0.34	0.35	0.35	0.36	0.37	0.38	0.39	0.40	0.41	0.42
	Medium[1]	Red	CFM	1381	1326	1269	1212	1161	1121	1070	1019	974	912
			WATTS	358	365	375	383	391	395	406	418	424	434
			BHP	0.38	0.39	0.40	0.41	0.42	0.42	0.44	0.45	0.45	0.47
	MedHigh	Orange	CFM	1631	1579	1525	1477	1423	1372	1336	1284	1233	1166
			WATTS	567	576	581	592	598	609	617	619	613	598
			BHP	0.61	0.62	0.62	0.63	0.64	0.65	0.66	0.66	0.66	0.64
	High	Black	CFM	1681	1633	1575	1526	1478	1415	1366	1312	1249	1159
			WATTS	618	626	636	644	652	653	649	642	627	602
			BHP	0.66	0.67	0.68	0.69	0.70	0.70	0.70	0.69	0.67	0.65

Dry Coil Air Delivery - Downflow Discharge

UNIT	MOTOR SPEED	WIRE COLOR		EXTERNAL STATIC PRESSURE (IN. W.C.)									
				0.10	0.20	0.30	0.40	0.50	0.60	0.70	0.80	0.90	1.0
PH3G--A42	Low	Blue	CFM	1365	1324	1284	1233	1181	1127	1084	1039	984	939
			WATTS	177	189	201	210	222	236	248	261	269	281
			BHP	0.19	0.20	0.22	0.23	0.24	0.25	0.27	0.28	0.29	0.30
	MedLow	Pink	CFM	1425	1384	1339	1301	1254	1199	1151	1104	1065	1015
			WATTS	197	210	223	235	248	257	271	284	296	305
			BHP	0.21	0.23	0.24	0.25	0.27	0.28	0.29	0.30	0.32	0.33
	Medium	Red	CFM	1582	1549	1509	1469	1433	1392	1346	1300	1249	1213
			WATTS	267	280	294	308	322	336	344	359	374	387
			BHP	0.29	0.30	0.32	0.33	0.35	0.36	0.37	0.38	0.40	0.42
	MedHigh[1]	Orange	CFM	1623	1586	1553	1511	1470	1433	1393	1350	1309	1261
			WATTS	285	299	312	324	335	349	363	378	393	407
			BHP	0.31	0.32	0.33	0.35	0.36	0.37	0.39	0.41	0.42	0.44
	High	Black	CFM	1775	1736	1696	1660	1622	1588	1557	1516	1472	1426
			WATTS	371	386	401	410	424	439	453	468	483	497
			BHP	0.40	0.41	0.43	0.44	0.45	0.47	0.49	0.50	0.52	0.53
PH3G--A48	Low	Blue	CFM	1503	1457	1423	1374	1330	1287	1241	1199	1153	1111
			WATTS	225	233	246	254	269	282	292	307	314	329
			BHP	0.24	0.25	0.26	0.27	0.29	0.30	0.31	0.33	0.34	0.35
	MedLow	Pink	CFM	1556	1508	1461	1432	1388	1346	1302	1256	1221	1168
			WATTS	244	261	268	281	290	305	319	330	345	353
			BHP	0.26	0.28	0.29	0.30	0.31	0.33	0.34	0.35	0.37	0.38
	Medium[1]	Red	CFM	1861	1822	1786	1758	1716	1688	1660	1619	1583	1539
			WATTS	400	417	426	441	452	467	482	492	507	519
			BHP	0.43	0.45	0.46	0.47	0.48	0.50	0.52	0.53	0.54	0.56
	MedHigh	Orange	CFM	2319	2291	2255	2230	2193	2166	2118	2057	1992	1887
			WATTS	758	769	787	799	808	823	822	805	780	737
			BHP	0.81	0.82	0.84	0.86	0.87	0.88	0.88	0.86	0.84	0.79
	High	Black	CFM	2532	2487	2444	2391	2330	2259	2179	2111	2033	1949
			WATTS	1014	1022	1015	994	965	935	898	858	823	786
			BHP	1.09	1.10	1.09	1.07	1.03	1.00	0.96	0.92	0.88	0.84

Dry Coil Air Delivery - Downflow Discharge

UNIT	MOTOR SPEED	WIRE COLOR		EXTERNAL STATIC PRESSURE (IN. W.C.)									
				0.10	0.20	0.30	0.40	0.50	0.60	0.70	0.80	0.90	1.0
PH3G--A60	Low	Blue	CFM	1479	1436	1387	1346	1298	1253	1206	1160	1114	1061
			WATTS	224	239	247	262	270	284	300	307	319	330
			BHP	0.24	0.26	0.26	0.28	0.29	0.30	0.32	0.33	0.34	0.35
	MedLow	Pink	CFM	1841	1796	1761	1724	1690	1651	1616	1578	1527	1478
			WATTS	425	434	453	460	476	485	501	508	525	542
			BHP	0.46	0.47	0.49	0.49	0.51	0.52	0.54	0.54	0.56	0.58
	Medium[1]	Red	CFM	2045	2009	1970	1933	1905	1868	1829	1802	1751	1683
			WATTS	569	579	597	607	623	639	648	665	674	663
			BHP	0.61	0.62	0.64	0.65	0.67	0.69	0.69	0.71	0.72	0.71
	MedHigh	Orange	CFM	2178	2148	2105	2073	2036	2002	1967	1919	1845	1751
			WATTS	674	691	703	717	733	743	758	754	734	701
			BHP	0.72	0.74	0.75	0.77	0.79	0.80	0.81	0.81	0.79	0.75
	High	Black	CFM	2480	2432	2375	2322	2236	2161	2085	2006	1917	1808
			WATTS	1029	1012	995	975	941	908	869	836	796	751
			BHP	1.10	1.09	1.07	1.05	1.01	0.97	0.93	0.90	0.85	0.81

*Air delivery values are without air filter and are for dry coil (See Wet Coil Pressure Drop table).

[1] Factory-shipped cooling speed.

NOTE: Deduct field-supplied air filter pressure drop and wet coil pressure drop to obtain external static pressure available for ducting.

Shaded areas indicate speed/static combinations that are not permitted.

Wet Coil Pressure Drop (IN. W.C.)

UNIT SIZE	STANDARD CFM (SCFM)																
	600	700	800	900	1000	1100	1200	1300	1400	1500	1600	1700	1800	1900	2000	2100	2200
30				0.05	0.06	0.07	0.08	0.11									
36				0.06	0.06	0.09	0.10	0.11	0.14								
42					0.05	0.05	0.06	0.07	0.08	0.08	0.09	0.09	0.11				
48							0.04	0.06	0.09	0.10	0.10	0.11	0.12	0.13	0.14		
60										0.06	0.07	0.01	0.08	0.09	0.10	0.12	0.13

Economizer with 1-in. Filter Pressure Drop (IN. W.C.)

FILTER SIZE IN. (MM)	COOLING TONS	STANDARD CFM (SCFM)																
		600	700	800	900	1000	1100	1200	1300	1400	1500	1600	1700	1800	1900	2000	2100	2200
600-1400 CFM 12x20x1+12x20x1 (305x508x25+305x508x25)	2.5, 3.0	–	–	0.09	0.14	0.16	0.18	0.25	0.28	0.3	–	–	–	–	–	–	–	–
1200-1800 CFM 16x24x1+14x24x1 (406x610x25+356x610x25)	3.5, 4.0	–	–	–	–	–	–	0.10	0.11	0.12	0.13	0.14	0.16	0.16	–	–	–	–
1500-2200 CFM 16x24x1+18x24x1 (406x610x25+457x610x25)	5.0	–	–	–	–	–	–	–	–	–	0.15	0.17	0.18	0.20	0.21	0.22	0.23	0.23

Filter Pressure Drop Table (IN. W.C.)

FILTER SIZE IN. (MM)	COOLING TONS	STANDARD CFM (SCFM)																
		600	700	800	900	1000	1100	1200	1300	1400	1500	1600	1700	1800	1900	2000	2100	2200
600-1400 CFM 12x20x1+12x20x1 (305x508x25+305x508x25)	2.5, 3.0	0.03	0.05	0.06	0.08	0.10	0.11	0.13	0.14	0.16	–	–	–	–	–	–	–	–
1200-1800 CFM 16x24x1+14x24x1 (406x610x25+356x610x25)	3.5, 4.0	–	–	–	–	–	–	0.07	0.08	0.09	0.09	0.10	0.11	0.12	–	–	–	–
1500-2200 CFM 16x24x1+18x24x1 (406x610x25+457x610x25)	5.0	–	–	–	–	–	–	–	–	–	0.04	0.06	0.08	0.10	0.11	0.13	0.14	0.15

Electric Heat Pressure Drop Table (IN. W.C.)
Small Cabinet: 30-36

	STANDARD CFM (SCFM)											
	500	600	700	800	900	1000	1100	1200	1300	1400	1500	1600
5kw	0.00	0.00	0.00	0.00	0.00	0.00	0.00	0.00	0.02	0.04	0.06	0.07
7.5 kw	0.00	0.00	0.00	0.00	0.00	0.00	0.02	0.03	0.05	0.07	0.08	0.09
10 kw	0.00	0.00	0.00	0.00	0.00	0.02	0.04	0.06	0.07	0.09	0.10	0.11
15 kw	0.00	0.00	0.00	0.02	0.04	0.06	0.08	0.10	0.12	0.14	0.16	0.18
20 kw	0.00	0.00	0.02	0.04	0.06	0.08	0.09	0.11	0.13	0.15	0.17	0.19

Electric Heat Pressure Drop Table (IN. W.C.)
Large Cabinet 42-60

	STANDARD CFM (SCFM)														
	1100	1200	1300	1400	1500	1600	1700	1800	1900	2000	2100	2200	2300	2400	2500
5kw	0.00	0.00	0.00	0.01	0.02	0.03	0.04	0.05	0.06	0.07	0.08	0.09	0.10	0.11	0.12
7.5 kw	0.00	0.00	0.01	0.02	0.03	0.04	0.05	0.06	0.07	0.08	0.09	0.10	0.11	0.12	0.13
10 kw	0.00	0.00	0.01	0.02	0.03	0.04	0.05	0.06	0.07	0.08	0.09	0.10	0.11	0.12	0.13
15 kw	0.00	0.02	0.03	0.04	0.05	0.06	0.07	0.08	0.09	0.10	0.11	0.12	0.13	0.14	0.15
20 kw	0.02	0.03	0.04	0.05	0.06	0.07	0.08	0.09	0.10	0.11	0.12	0.13	0.14	0.15	0.16

TYPICAL PIPING AND WIRING

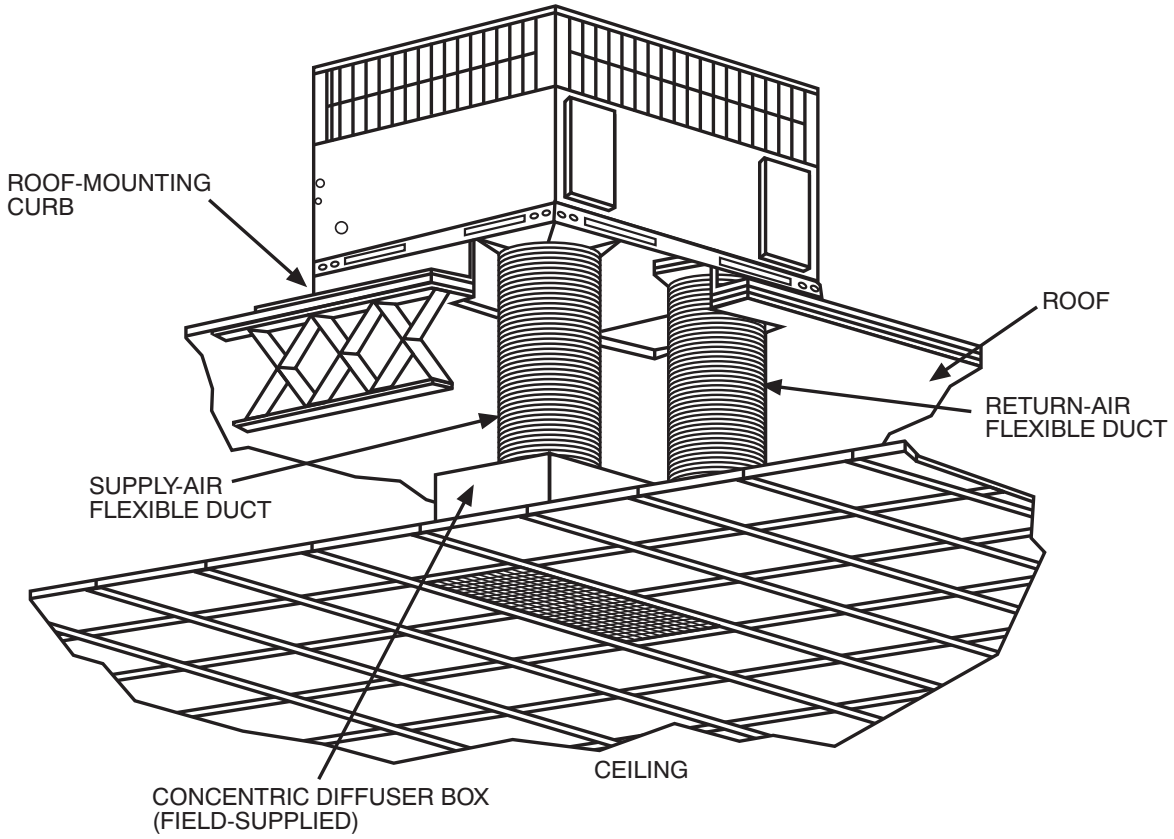

A09230

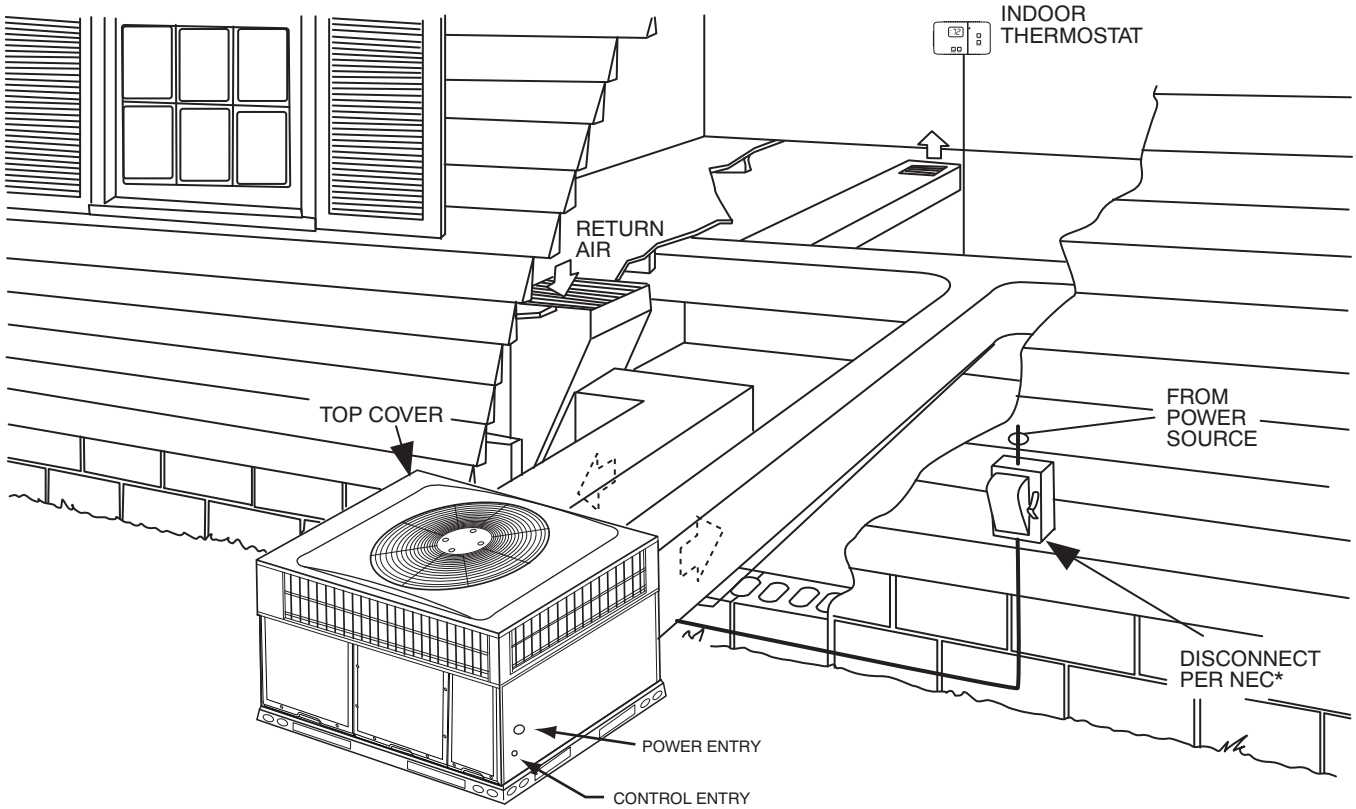

*NEC - National Electrical Code

A09240

APPLICATION DATA

Condensate trap — A 2-in. (51 mm) condensate trap must be field supplied.

Ductwork — Secure downflow discharge ductwork to roof curb. For horizontal discharge applications, attach ductwork to unit with flanges.

To convert a unit to downflow discharge — Units are equipped with factory-installed inserts in the downflow openings. Removal of the inserts is similar to removing an electrical knock-out. Units installed in horizontal discharge orientation do not require duct covers.

Maximum cooling airflow — To minimize the possibility of condensate blow-off from the evaporator, airflow through the units should not exceed 450 CFM per ton.

Minimum cooling airflow — Minimum cooling airflow is 350 cfm per ton in cooling mode. Airflow can be lower in certain modes when humidity removal is an issue.

Minimum ambient cooling operation temperature — All standard units have a minimum ambient cooling operating temperature of 40°F (4.4°C). With accessory low ambient temperature kit, units can operate at temperatures down to 0°F (-17.8°C).

Maximum operating outdoor air temperature for cooling is 125°F (51.7°C).

BALANCE POINT WORKSHEET

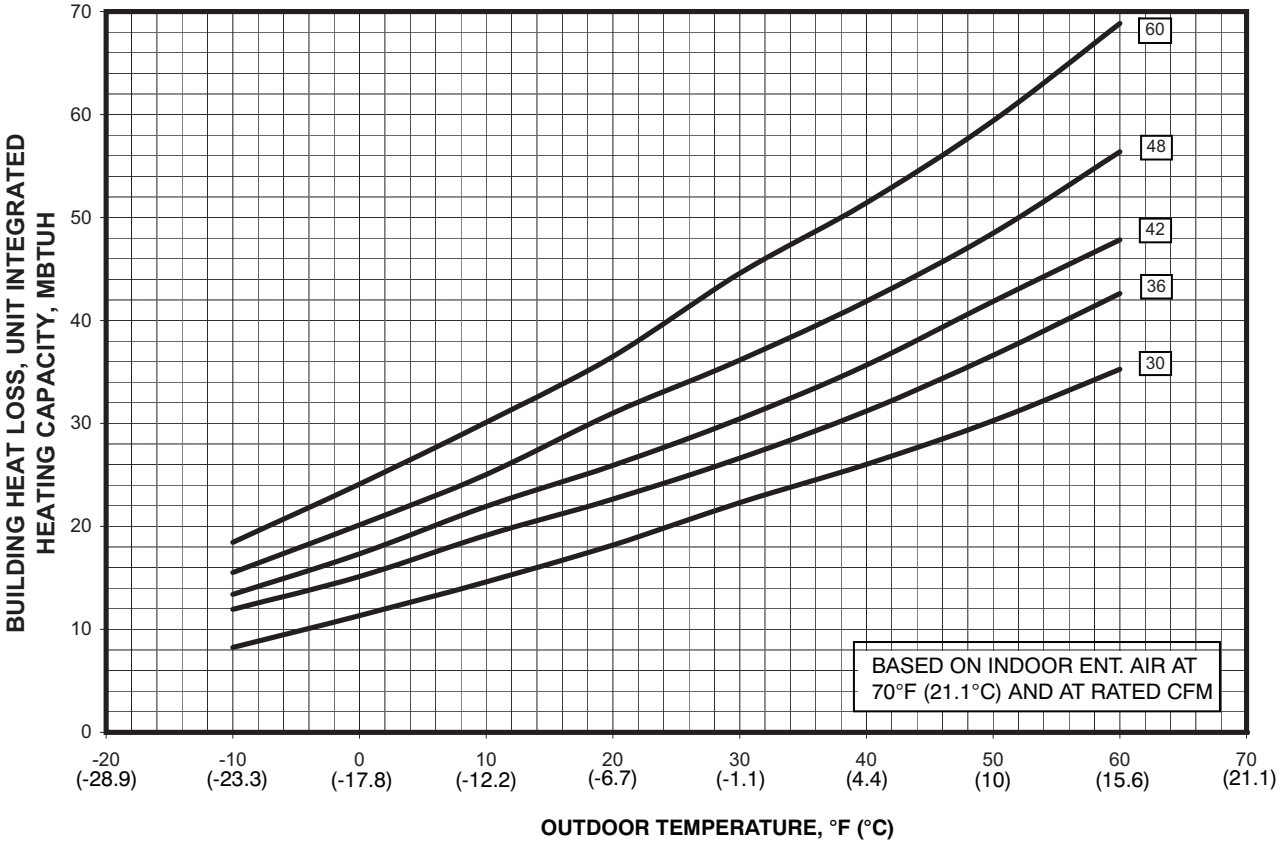

A150695

ELECTRICAL DATA

UNIT	NOMINAL V-PH-HZ	VOLTAGE RANGE		COMPRESSOR		OFM	IFM	ELECTRIC HEAT		POWER SUPPLY	
		MIN	MAX	RLA	LRA	FLA	FLA	NOMINAL kW	FLA	MCA	MOCP
PH3G– –A30	208/230-3-60	197	253	10.9	58	1.2	4.1	-/-	-/-	18.9	25
								3.8/5	10.4/12	31.9/33.9	35/35
								7.5/10	20.8/24.1	44.9/49.1	45/50
								11.3/15	31.2/36.1	57.9/64.1	60/70
PH3G– –A36	208/230-3-60	197	253	13	73	1.2	6.0	-/-	-/-	23.5	30
								3.8/5	10.4/12	36.5/38.5	40/40
								7.5/10	20.8/24.1	49.5/53.6	50/60
								11.3/15	31.2/36.1	62.5/68.6	70/70
	460-3-60	414	506	6	38	0.5	3.0	-/-	-/-	11	15
								3.8/5	6	18.5/18.5	20
								7.5/10	12	26/26	30
								11.3/15	18	33.5/33.5	35
PH3G– –A42	208/230-3-60	197	253	13.5	88	1.2	6.0	-/-	-/-	24.1	35
								3.8/5	10.4/12	37.1/39.1	40/40
								7.5/10	20.8/24.1	50.1/54.2	60/60
								11.3/15	31.2/36.1	63.1/69.2	70/70
								15/20	41.4/47.9	75.8/84	80/90
	460-3-60	414	506	6.2	44	0.5	3.0	-/-	-/-	11.3	15
								3.8/5	6	18.8/18.8	20
								7.5/10	12	26.3/26.3	30
								11.3/15	18	33.8/33.8	35
								15/20	24.1	41.4/41.4	45
PH3G– –A48	208/230-3-60	197	253	14.8	83.1	1.2	7.6	-/-	-/-	27.3	40
								3.8/5	10.4/12	40.3/42.3	45/45
								7.5/10	20.8/24.1	53.3/57.4	60/60
								11.3/15	31.2/36.1	66.3/72.4	70/80
								15/19.91	41.4/47.9	79.1/87.2	80/90
	460-3-60	414	506	6.5	41	0.5	3.8	-/-	-/-	12.4	15
								3.8/5	6	19.9/19.9	20
								7.5/10	12	27.4/27.4	30
								11.3/15	18	34.9/34.9	35
								15/20	24.1	42.6/42.6	45
PH3G– –A60	208/230-3-60	197	253	18.4	110	1.2	7.6	-/-	-/-	31.8	45
								3.8/5	10.4/12	44.8/46.8	45/50
								7.5/10	20.8/24.1	57.8/61.9	60/70
								11.3/15	31.2/36.1	70.8/76.9	80/80
								15/19.91	41.4/47.9	83.6/91.7	90/100
	460-3-60	414	506	8	52	0.5	3.8	-/-	-/-	14.3	20
								3.8/5	6	21.8/21.8	25
								7.5/10	12	29.3/29.3	30
								11.3/15	18	36.8/36.8	40
								15/20	24.1	44.4/44.4	45

See Legend and Notes below.

LEGEND

FLA -- Full Load Amps
LRA -- Locked Rotor Amps
MCA -- Minimum Circuit Amps
MOCP -- Maximum Overcurrent Protection
RLA -- Rated Load Amps

NOTES:

1. In compliance with NEC (National Electrical Code) requirements for multimotor and combination load equipment (refer to NEC Articles 430 and 440), the overcurrent protective device for the unit shall be Power Supply fuse or circuit breaker.
2. Minimum wire size is based on 60 C copper wire. If other than 60 C wire is used, or if length exceeds wire length in table, determine size from NEC.
3. Unbalanced 3-Phase Supply Voltage
   Never operate a motor where a phase imbalance in supply voltage is greater than 2%. Use the following formula to determine the percentage of voltage imbalance

   % Voltage imbalance

   $$= 100 \times \frac{\text{max voltage deviation from average voltage}}{\text{average voltage}}$$

EXAMPLE: Supply voltage is 230-3-60.

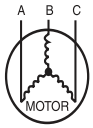

AB = 228 v
BC = 231 v
AC = 227 v

$$\text{Average Voltage} = \frac{228 + 231 + 227}{3} = \frac{686}{3} = 229$$

Determine maximum deviation from average voltage.
(AB) 229 - 228 = 1 v
(BC) 231 - 229 = 2 v
(AC) 229 - 227 = 2 v

Maximum deviation is 2 v.

Determine percent of voltage imbalance

$$\% \text{ Voltage Imbalance} = 100 \times \frac{2}{229} = 0.8\%$$

This amount of phase imbalance is satisfactory as it is below the maximum allowable 2%.

IMPORTANT: If the supply voltage phase imbalance is more than 2%, contact your local electric utility company immediately.

A06564

TYPICAL CONNECTION WIRING SCHEMATIC - 208/230-3-60

CONNECTION WIRING DIAGRAM

DANGER: ELECTRICAL SHOCK HAZARD DISCONNECT POWER BEFORE SERVICING

NOTES:
1. IF ANY OF THE ORIGINAL WIRES FURNISHED ARE REPLACED,THEY MUST BE REPLACED WITH THE SAME WIRE OR ITS EQUIVALENT.
2. SEE PRICE PAGES FOR THERMOSTATS.
3. USE 75 DEG. COPPER CONDUCTORS FOR FIELD INSTALLATION.
4. SEE INSTALLATION INSTRUCTIONS FOR PROPER HEATING AND COOLING CONNECTIONS FOR YOUR UNIT. INDOOR FAN MOTOR PLUGS - "DO NOT DISCONNECT UNDER LOAD"
5. THIS FUSE IS MANUFACTURED BY LITTELFUSE, P/N 257003.
6. REMOVE YELLOW SPLICE WIRE WHEN ECONOMIZER AND ECONOMIZER RELAYS ARE USED AND CONNECT TO RELAY R1 AS SHOWN.
7. WHEN ECONOMIZER AND ECONOMIZER RELAYS ARE USED,CONNECT THE YELLOW AND BLACK WIRES TO RELAY R AS SHOWN. RELAY KIT REQUIRED WITH ECONOMIZER AND HEAT PUMP/DUAL FUEL UNITS.
8. WHEN ECONOMIZER AND ECONOMIZER RELAYS ARE USED,INSTALL WIRES AS SHOWN ONTO THE COILS OF RELAY R AND RELAY R1.
9. DEHUM FEATURE CANNOT BE USED WHEN ECONOMIZER IS INSTALLED. UNIT FACTORY-SHIPPED IN STD MODE.

SCHEMATIC 208/230-3-60

LEGEND

△	FIELD SPLICE
⬭	TERMINAL (MARKED)
○	TERMINAL (UNMARKED)
●	SPLICE (IF USED)
⬭	SPLICE (MARKED)
——	FACTORY WIRING
- -	FIELD CONTROL WIRING
—·—	FIELD POWER WIRING
---	ACCESSORY OR OPTIONAL WIRING

C	CONTACTOR
CAP 1	CAPACITOR, COMP
CCH	CRANK CASE HEATER
COMP	COMPRESSOR MOTOR
DB	DEFROST BOARD
DH	DEHUMIDIFICATION MODE
DEHUM	DEHUMIDIFICATION MODE
DFT	DEFROST TEMPERATURE SWITCH
DR	DEFROST RELAY
ECON	ECONOMIZER
EQUIP	EQUIPMENT
GND	GROUND
HPS	HIGH PRESSURE SWITCH
HR	HEATER RELAY
IFB	INDOOR FAN BOARD
IFM	INDOOR FAN MOTOR
LPS	LOW PRESSURE SWITCH
OFM	OUTDOOR FAN MOTOR
RVS	REVERSING VALVE
TRAN	TRANSFORMER
T-STAT	THERMOSTAT
R	ECON RELAY
R1	ECON RELAY
STD	STANDARD MODE

COLOR CODE

BLK	BLACK
BLU	BLUE
BRN	BROWN
GRY	GRAY
GRN	GREEN
ORN	ORANGE
PNK	PINK
RED	RED
VIO	VIOLET
WHT	WHITE
YEL	YELLOW

UNIT COMPONENT ARRANGEMENT

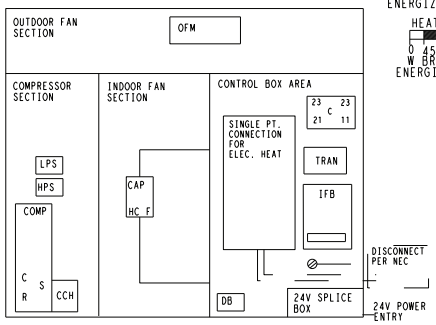

COOLING FAN LOGIC

ENERGIZED DE-ENERGIZED

HEATING FAN LOGIC

ENERGIZED DE-ENERGIZED

DIP SWITCH SETTINGS

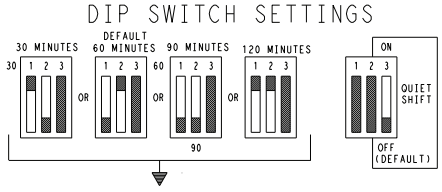

FIELD SELECTABLE OPTIONS FOR TIME PERIOD BETWEEN DEFROST CYCLES (MINUTES)

SPEED UP — JUMPERED TEST PINS (USE METAL OBJECT) FIELD SPEED-UP CYCLE

1) MOMENTARILY SHORT PINS AND RELEASE TO BYPASS COMPRESSOR OFF DELAY.
2) SHORT FOR 5+ SEC. AND RELEASE FOR FORCED DEFROST.
3) PERMANENT SHORT WILL BE IGNORED.

DEFROST WILL TERMINATE IN 30 SEC. IF DFT OPEN.
DEFROST WILL TERMINATE NORMALLY IF DFT IS CLOSED.

THE COMPRESSOR WILL SHUT OFF FOR 30 SEC. ON DEFROST INITIATION AND TERMINATION IN THE "QUIET SHIFT" ON POSITION

A11006

TYPICAL LADDER WIRING SCHEMATIC - 208/230-3-60

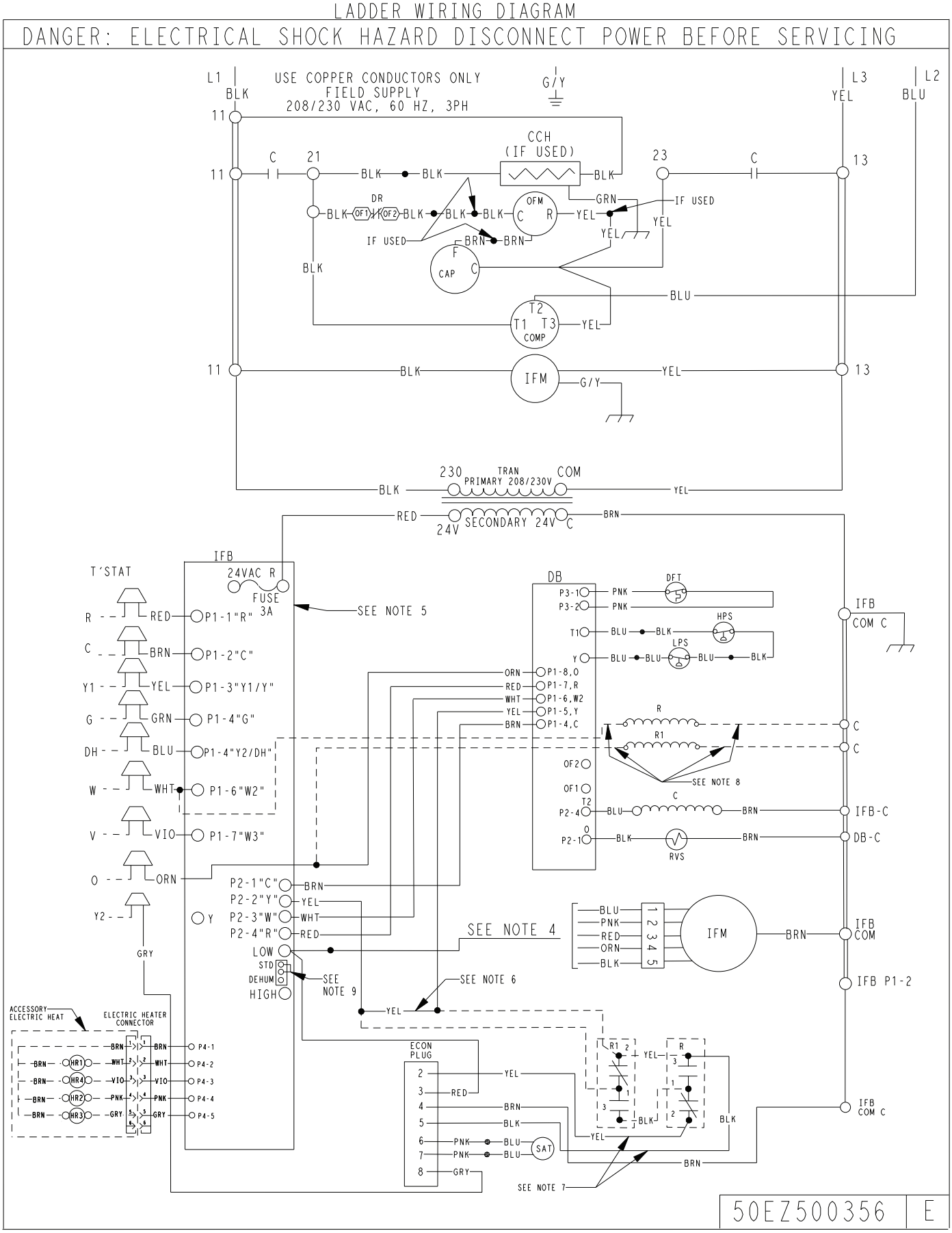

TYPICAL CONNECTION WIRING SCHEMATIC - 460-3-60

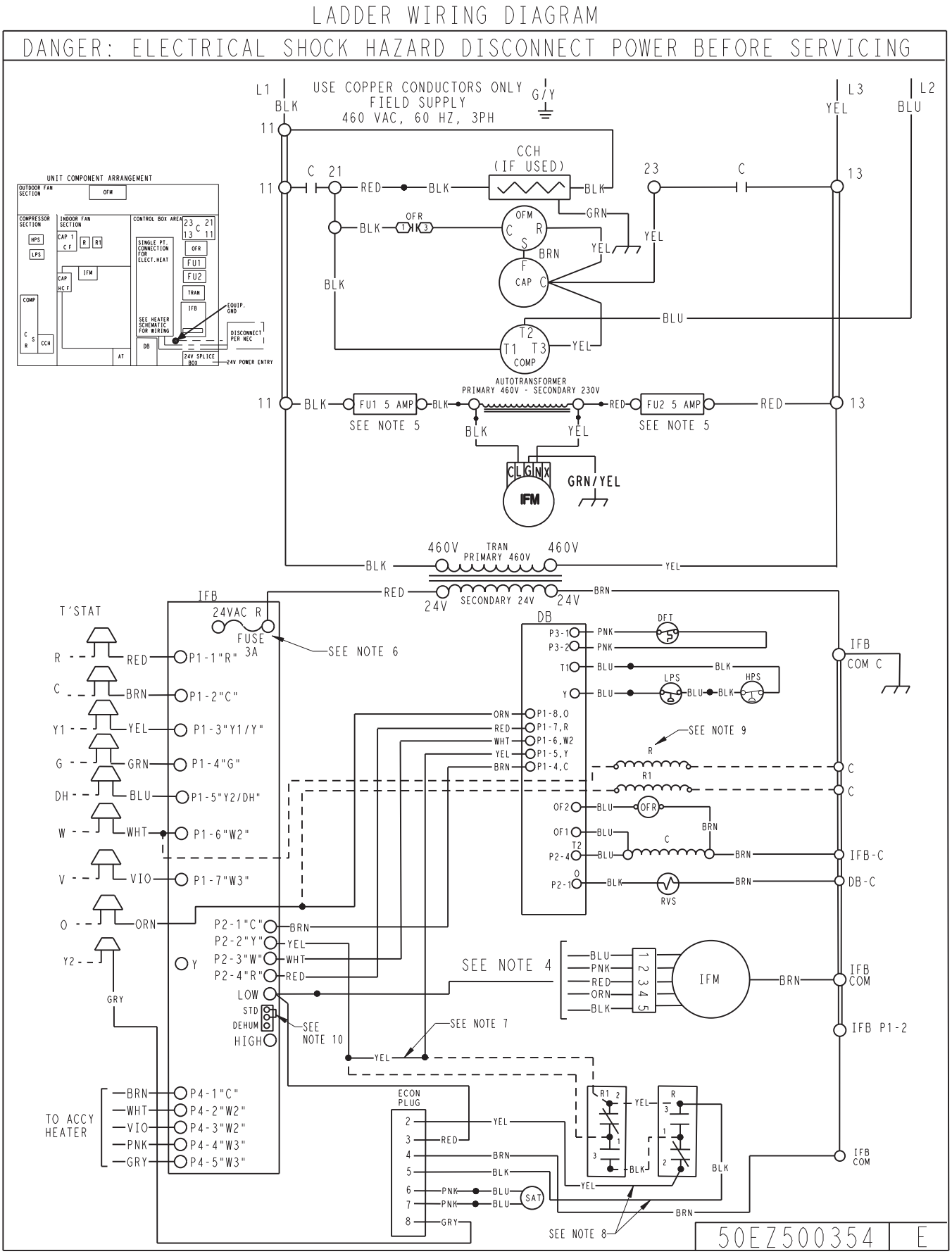

A10195C

TYPICAL LADDER WIRING SCHEMATIC - 460-3-60

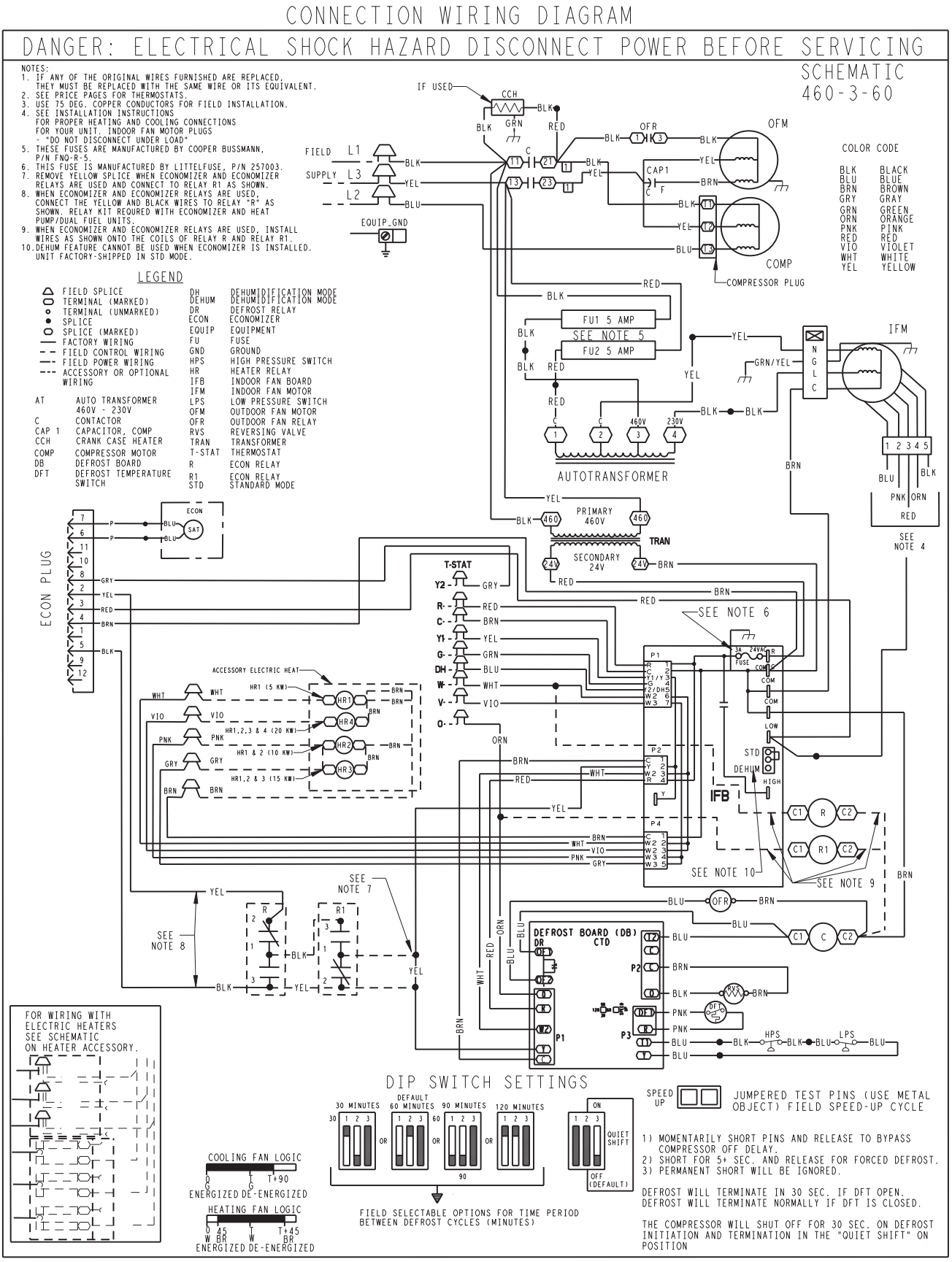

CONTROLS

Operating sequence

When power is supplied to unit, the transformer (TRAN) is energized.

On units with crankcase heater, heater is also energized.

Cooling — With the thermostat in the cooling position, the thermostat makes circuit “R” to “O”. This energizes the reversing valve solenoid (RVS) and places the unit in standby condition for cooling.

As the space temperature rises, the thermostat closes circuit “R” to “Y”. A circuit is made to contactor (C), starting the compressor (COMP) and outdoor-fan motor (OFM). Circuit “R” to “G” is made at the same time and starts the indoor-fan motor (IFM).

When the thermostat is satisfied, contacts open, deenergizing C. The COMP and OFM stop, and the IFM stops after the preselected time delay.

On the loss of the thermostat call for cooling, 24 V is removed from both the “Y1/Y” and “G” terminals (provided the fan switch is in the “AUTO” position) de-energizing the compressor contactor and opening the contacts supplying power to compressor/OFM. After a 90-second delay, the IFM shuts off. If the thermostat fan selector switch is in the “ON” position, the IFM will run continuously.

Heating — On a call for heat, thermostat makes circuites “R” to “Y) and “R” to “G”.

A circuit is made to C, starting COMP and OFM. Circuit “R” to “G” also is completed, energizing IFR and starting IFM after the selected time delay.

Should room temperature continue to fall, circuit “R” to “W” is made through second-stage thermostat. If optional electric heat package is used, a relay is energized, bringing on first bank of supplemental electric heat. When thermostat is satisfied, contacts open, deenergizing contactor and relay; motors and heaters deenergize.

Defrost — Defrost board (DB) is a time and temperature control, which includes a field-selectable time period (dip switch 1 and 2 on the board) between checks for defrost (30, 60, 90, or 120 minutes). Electronic timer and defrost cycle start only when contactor is energized and defrost thermostat (DFT) is closed.

The defrost board is also equipped with a third dip switch for selecting Quiet Shift operation. The Quiet Shift operation turns compressor off at defrost initiation and termination. Unit is factory shipped with quiet shift turned off.

Defrost mode is identical to cooling mode, except outdoor fan motor stops and a bank of optional electric heat turns on to warm air supplying the conditioned space.

NOTE:

1. Compressor time delay occurs through the defrost control board.
2. Defrost control board has built in 5 minute compressor delay; once the compressor has started and then stopped, it cannot be restarted again until 5 minutes have elapsed.

GUIDE SPECIFICATIONS

Packaged Heat Pumps

HVAC Guide Specifications

Size Range: **2 1/2 to 5 Tons, Nominal Cooling**

Model Number: **PH3G--A**

Part 1—General

SYSTEM DESCRIPTION

Outdoor, packaged, air-to-air heat pump unit utilizing a hermetic scroll compressor for cooling duty and optional electric heating. Unit shall discharge supply air vertically or horizontally as shown on contract drawings. Outdoor fan/coil section shall have a draw-thru design with vertical discharge for minimum sound levels.

QUALITY ASSURANCE

A. Unit shall be rated in accordance with ARI Standards 210/240 and 270.

B. Unit shall be designed in accordance with UL Standard 1995.

C. Unit shall be manufactured in a facility registered to ISO 9001 manufacturing quality standard.

D. Unit shall be UL listed and c-UL certified as a total package for safety requirements.

E. Roof curb shall be designed to conform to NRCA Standards.

F. Insulation and adhesives shall meet NFPA 90A requirements for flame spread and smoke generation.

G. Cabinet insulation shall meet ASHRAE Standard 62P.

DELIVERY, STORAGE AND HANDLING

Unit shall be stored and handled per manufacturer's recommendations.

Part 2 — Products

EQUIPMENT

A. General:

Factory-assembled, single-piece, heat pump unit. Contained within the enclosure shall be all factory wiring, piping, controls, refrigerant charge (R-410A), and special features required prior to field start-up.

B. Unit Cabinet:

1. Unit cabinet shall be constructed of phosphated, zinc-coated, pre-painted steel capable of withstanding 500 hours of salt spray.
2. Normal service shall be through a single removable cabinet panel.
3. The unit shall be constructed on a rust proof unit base that has an externally trapped, integrated sloped drain.
4. Indoor fan compartment top surface shall be insulated with a minimum 1/2-in. (12.7 mm) thick, flexible fiberglass insulation, coated on the air side and retained by adhesive and mechanical means. The indoor wall sections will be insulated with a minimum semi-rigid, foil-faced board capable of being wiped clean. Aluminum foil-faced fiberglass insulation shall be used in the entire indoor air cavity section.
5. Unit shall have a field-supplied condensate trap.
6. Metal Insulated Duct Covers for side discharge will be standard on all sizes.
7. Unit insulation conforms to ASHRAE 62P.

C. Fans:

1. The indoor fan shall be 5-speed, direct-drive, as shown on equipment drawings.
2. Fan wheel shall be made from steel and shall be double-inlet type with forward-curved blades with corrosion resistant finish. Fan wheel shall be dynamically balanced.
3. Outdoor fan shall be direct-drive, propeller-type with aluminum blades riveted to corrosion resistant steel spiders, be dynamically balanced, and discharge air vertically.

D. Compressor:

1. Fully hermetic compressors with factory-installed vibration isolation.
2. Scroll compressors shall be standard on all units.
3. Compressor Protection:
   Defrost control shall protect compressor by preventing "short cycling."

E. Coils:

Indoor and outdoor coils shall have aluminum plate fins mechanically bonded to seamless copper tubes with all joints brazed. Tube sheet openings shall be belled to prevent tube wear.

F. Refrigerant Metering Device:

Refrigerant metering device shall be thermostatic expansion valve for cooling, and fixed orifice for heating.

G. Filters:

Filter section shall consist of field-installed, throwaway, 1-in. (25 mm) - thick fiberglass filters of commercially available sizes.

H. Controls and Safeties:

1. Unit controls shall be complete with a self-contained, low-voltage control circuit.
2. Units shall incorporate an internal compressor protector that provides reset capability.

I. Operating Characteristics:

1. Unit shall be capable of starting and running at 125°F (51.7°C) ambient outdoor temperature.
2. Compressor with standard controls shall be capable of operation down to 40°F (4.4°C) ambient outdoor temperature in cooling mode.
3. Unit shall be provided with 60-second fan time delay after the thermostat is satisfied.

J. Electrical Requirements:

All unit power wiring shall enter the unit cabinet at a single location.

K. Motors:

1. Compressor motors shall be of the refrigerant-cooled type with line-break thermal and current overload protection.
2. All fan motors shall have permanently lubricated bearings, and inherent, automatic reset, thermal overload protection.
3. Condenser fan motor shall be totally enclosed.
4. Evaporator Fan Motor to be high-efficiency ECM motor.
5. Condenser fan motor shall be totally enclosed.

L. Special Features Available:

1. Coil Options:
   Base unit with tin plated indoor coil hairpins.
2. Compressor Start Kit (single phase units only
   Shall provide additional starting torque for single-phase compressors.
3. Thermostat:
   To provide for two-stage heating and one-stage cooling in addition manual or automatic changeover and indoor fan control.
4. Crankcase Heater:
   Shall provide anti-floodback protection for lowload cooling applications.
5. Economizer:
   a. Economizer controls capable of providing free cooling using outside air.
   b. Equipped with low leakage dampers not to exceed 3% leakage, at 1.0 IN. W.C. pressure differential.
   c. Spring return motor shuts off outdoor damper on power failure.
6. Electric heaters:
   a. Electric heater shall be available as a field installed option.
   b. Heater elements shall be open wire type, adequately supported and insulated with ceramic bushings.
   c. Electric heater packages must provide single point power connection capability.
7. Filter Rack Kit:
   Shall provide filter mounting for downflow applications.
8. Flat Roof Curb:
   Curbs shall have seal strip and a wood nailer for flashing and shall be installed per manufacturer's instructions.
9. Low Ambient Package:
   Shall consist of a solid-state control and outdoor coil temperature sensor for controlling outdoor-fan motor operation, which shall allow unit to operate down to 0°F (-17.7°C) outdoor ambient temperature.
10. Louvered Grille:
    Louvered grille shall be available as a field-installed option to provide hail guard and vandalism protection.
11. Manual Outdoor Air Damper:
    Package shall consist of damper, birdscreen, and rainhood which can be preset to admit outdoor air for year-round ventilation.
12. Square-To-Round Duct Transitions (30-48 size):
    Shall have the ability to convert the supply and return openings from rectangular to round.

©2016 Payne Heating & Cooling Systems • 7310 W. Morris St. • Indianapolis, IN 46231 Edition Date: 06/16 **Catalog No: SS–PH3G–06**

Manufacturer reserves the right to change, at any time, specifications and designs without notice and without obligations.

Replaces: SS–PH3G–05