MID–EFFICIENCY VARIABLE–SPEED, TWO–STAGE INDUCED–COMBUSTION DELUXE, 4–WAY MULTIPOISE GAS FURNACE

Carrier
turn to the experts

Troubleshooting Guide

Safety Considerations 1
Instructions 1
Example 2
Furnace Model Nomenclature 2
General 3
Sequence of Operation 3
Heating Mode 3
Single-Stage Thermostat and Two-Stage Heating (Adaptive Mode) 3
Two-Stage Thermostat and Two-Stage Heating 4
Cooling Mode 4
Single-Speed Cooling 4
Single-Stage Thermostat and Two-Speed Cooling (Adaptive Mode) 4
Two-Stage Thermostat and Two-Speed Cooling 5
Dehumidify Mode 5
Super-Dehumidify Mode 5
Continuous-Blower Mode 5
Heat Pump Defrost 5
Component Test 6
Service/Status Code Instructions 6
Start Here 9
Rapid Flashing AMBER LED 10
Improper Cooling Air Flow 11
High Heat Temperature Rise Too Low 12
Status Code 11 - No Previous Code 13
Status Code 12 - Blower On After Power Up 13
Status Code 13 - Limit Circuit Lockout 14
Status Code 14 - Ignition Lockout 15
Status Code 15 - Blower Motor Lockout 15
Status Code 21 - Gas Heating Lockout 16
Status Code 22 - Abnormal Flame-Proving Signal 16
Status Code 23 - Pressure Switch Did Not Open 16
Status Code 24 - Secondary Voltage Fuse Is Open. 17
Status Code 25 - Model Selection or Setup Error. 19
Status Code 31 - High-Heat Pressure Switch or Relay Did Not Close or Reopened 19
Status Code 32 - Low-Heat Pressure Switch Did Not Close or Reopened 22
Status Code 33 - Limit Circuit Fault 24
Status Code 34 - Ignition-Proving Fault 27
Status Code 41 - Blower Motor Fault 29
Status Code 43 - Low-Heat Pressure Switch Open While High-Heat Pressure Switch Is Closed 32
Status Code 45 - Control Circuitry Lockout 33
Cleanup and Start-Up Instructions 33
APPENDIX A - Board Layout & Wiring Schematic 34
APPENDIX B - ECM Blower Motor Description & Operation 36
APPENDIX C - Pressure Check Diagram 37
APPENDIX D - Static Pressure Reading Location Diagrams 38
APPENDIX E - Quick Reference Information 40
APPENDIX F - Thermostat Staging Algorithm 41

SAFETY CONSIDERATIONS

Installing and servicing heating equipment can be hazardous due to gas and electrical components. Only trained and qualified personnel should install, repair, or service heating equipment.

Untrained personnel can perform basic maintenance functions such as cleaning and replacing air filters. All other operations must be performed by trained service personnel. When working on heating equipment, observe precautions in the literature, on tags, and on labels attached to or shipped with the unit and other safety precautions that may apply.

Follow all safety codes. In the United States, follow all safety codes including the National Fuel Gas Code (NFGC) NFPA 54 2009/ANSI Z223.1-2009 and the Installation Standards, Warm Air Heating and Air Conditioning Systems (NFPA 90B) ANSI/NFPA 90B. In Canada, refer to the CAN/CGA-B/49.10- and .2-M00 National Standard of Canada, Natural Gas and Propane Installation Codes (NSCNGPIC). Wear safety glasses and work gloves. Have a fire extinguisher available during start-up and adjustment procedures and service calls.

Recognize safety information. This is the safety-alert symbol ⚠.When you see this symbol on the unit and in instructions or manuals, be alert to the potential for personal injury.

Understand the signal words DANGER, WARNING, CAUTION, and NOTE. These words are used with the safety alert symbol. DANGER identifies the most serious hazards which **will** result in severe personal injury or death. WARNING signifies hazards which **could** result in personal injury or death. CAUTION is used to identify unsafe practices which **would** result in minor personal injury or product and property damage. NOTE is used to highlight suggestions which **will** result in enhanced installation, reliability, or operation.

INSTRUCTIONS

This guide uses your expertise and observations to lead you to the trouble spot as efficiently as possible. This is only intended as a guide and should not be used blindly. Your experience and expertise are of high value when troubleshooting this unit. Do not disregard all of your instincts.

The variable speed furnace control was designed with diagnostic capabilities built in. A AMBER LED is used to flash a status code which will lead you to 1 of the sections as listed in the Index.

You should **ALWAYS** begin in the **START HERE** section (see Index for page number) which will guide you to the appropriate section where a minimal number of steps will be used to correct the problem. Once in a section, read the ACTION. An ACTION may have a number in the GO TO column. Do whatever the ACTION says, then proceed to the step indicated in the GO TO column.

If the ACTION is a question (a question will have a number in the YES or NO column), answer it YES or NO. If the answer is YES, go to the step indicated in the YES column. If the answer is NO, go to the step indicated in the NO column.

Let's try our guide out using the EXAMPLE section below, and see how it works. Suppose that the problem is a defective low heat pressure switch (for example the contacts will not open). This is an internal problem and cannot simply be seen. We go to the START HERE section to Step 1.

EXAMPLE

START HERE Section

STEP	ACTION	YES	NO	GO TO
1.	Step 1 tells us to remove main furnace door first and NOT TO REMOVE THE BLOWER ACCESS PANEL. It then asks the question, ''Is AMBER LED status light on?'' If the low heat pressure switch was defective, a pressure switch did not open status code would be flashing, so the answer is YES. We go to Step 2.	2	19	
2.	Step 2 asks the question, ''Is the AMBER LED status light blinking rapidly without a pause?'' If the low heat pressure switch was defective, a pressure switch did not open status code would be flashing, so the answer is NO. We go to Step 4.	3	4	
4.	Step 4 asks the question, ''Is the AMBER LED status light blinking ON/OFF slowly with a combination of short and long flashes?''. If the low heat pressure switch was defective, a pressure switch did not open status code would be flashing, so the answer is YES. We go to Step 5.	5	7	
5.	Step 5 tells us to determine the status code. The status code is a 2 digit number with the first digit determined by the number of short flashes and the second digit by the number of long flashes. So we count the short and long flashes and see that status code 23 is flashing and go to Step 6.			6
6.	Step 6 tells us to go to status code 23 section			INDEX

MODEL NUMBER NOMENCLATURE

58CVA **070** **100** **12**

58CVA Variable Speed 4-Way Multipoise
58CVX Low NOx Version

Input Capacity

070 – 66,000 Btuh	135 – 132,000 Btuh
090 – 88,000 Btuh	155 – 154,000 Btuh
110 – 110,000 Btuh	

	Nominal Cooling Size (Airflow at .5 ESP.) (400 CFM per 12,000 Btuh)
100	12 – 1200 CFM
110	16 – 1600 CFM
120	20 – 2000 CFM
130	22 – 2200 CFM
140	
150	
160	

Series Number

GENERAL

The furnace must have a 115-vac power supply properly connected and grounded. Correct polarity must be maintained to enable gas heating operation.

The gas service pressure must not exceed 0.5 psig (14-in. W.C.), and no less than 0.16 psig (4.5-in. W.C.)

Thermostat wire connections to the furnace at R and W/W1 are the minimum required for gas heating operation. W2 must be connected for 2-stage heating thermostats. Y/Y2 and G are required to be connected to the furnace for single-stage cooling and heat pumps. Y1, Y/Y2, and G are required for two-stage cooling and heat pumps. G is required for continuous-fan. COM-24V is required for some clock thermostats. These connections must be made at the 24-vac terminal block on the furnace control. (See Appendix A).

This furnace can be installed with either a single-stage heat/cool or a two-stage heat/cool thermostat.

CAUTION: This furnace is equipped with a manual reset switch(es)in the gas control area. The switch(es) will open and shut off power to the gas valve, if a flame rollout or overheating condition occurs in the gas control area. DO NOT bypass the switch(es). Correct inadequate combustion-air supply and/or component failure before resetting the switch. Failure to follow this caution could result in premature product failure.

Before operating the furnace, check each manual reset switch for continuity. If necessary, press and release the button to reset the switch.

USER INTERFACE DESCRIPTION FOR FURNACE TROUBLESHOOTING GUIDES

This furnace may use a communication user interface instead of a conventional thermostat. The user interface communicates to the furnace and other components such as communicating outdoor units and zoning systems via the ABCD connector at the furnace control board.

The 4-wire ABCD connection by-passes the thermostat inputs at the furnace control board. However, non-communicating outdoor units or other non-communicating accessories may be wired to the thermostat terminal strip or other output terminals on the furnace control board.

The troubleshooting guide is written using the conventional thermostat inputs and outputs as a reference. The sequence of operation with a user interface is similar to a thermostat. When troubleshooting the furnace, it will be necessary to disconnect the ABCD connector from the furnace control board and use jumper wires across the thermostat terminals on the furnace control board when required.

For specific user interface or communication system operation and set up details, refer to the appropriate instructions for that device.

When troubleshooting is completed, remember to re-install the ABCD connector and check the system out via the user interface.

SEQUENCE OF OPERATION

Using the schematic diagram in Appendix A, follow the sequence of operation through the different modes. Read and follow the wiring diagram very carefully.

NOTE: If a power interruption occurs during a call for heat (W/W1 or W/W1-and-W2), the control will start a 90-second blower-only ON period two seconds after power is restored, if the thermostat is still calling for gas heating. The amber LED light will flash code 12 during the 90-second period, after which the LED will be ON continuous, as long as no faults are detected. After the 90-second period, the furnace will respond to the thermostat normally.

The blower access panel must be installed for power to be conducted through the blower door interlock switch ILK to the furnace control CPU, transformer TRAN, inducer motor IDM, blower motor BLWM, hot-surface igniter HSI, and gas valve GV.

Heating Mode

Single-Stage Thermostat and Two-Stage Heating (Adaptive mode)

NOTE: The low-heat only switch SW1-2 selects either the low-heat only operation mode when ON, (see item 2. below) or the adaptive heating mode when OFF in response to a call for heat. (See Fig. 1.) When the W2 thermostat terminal is energized it will always cause high-heat operation when the R to W circuit is closed regardless of the setting of the low-heat only switch.

This furnace can operate as a two-stage furnace with a single-stage thermostat because the furnace control CPU includes a programmed adaptive sequence of controlled operation, which selects low-heat or high-heat operation. This selection is based upon the stored history of the length of previous gas-heating periods of the single-stage thermostat.

The furnace will start up in either low- or high-heat. If the furnace starts up in low-heat, the control CPU determines the low-heat on-time (from 0 to 16 minutes) which is permitted before switching to high-heat.

If the power is interrupted, the stored history is erased and the control CPU will select low-heat for up to 16 minutes and then switch to high-heat, as long as the thermostat continues to call for heat. Subsequent selection is based on stored history of the thermostat cycle times.

The wall thermostat "calls for heat", closing the R to W circuit. The furnace control performs a self-check, verifies the low-heat and high-heat pressure switch contacts LPS and HPS are open, and starts the inducer motor IDM in high-speed.

a. **Inducer Prepurge Period** - If the furnace control CPU selects low-heat operation the inducer motor IDM comes up to speed, the low-heat pressure switch LPS closes, and the furnace control CPU begins a 15-second prepurge period. If the low-heat pressure switch LPS fails to remain closed the inducer motor IDM will remain running at high-speed. After the low-heat pressure switch re-closes thefurnace control CPU will begin a 15-second prepurge period, and continue to run the inducer motor IDM at high-speed.
   If the furnace control CPU selects high-heat operation, the inducer motor IDM remains running at high-speed, and the high-heat pressure switch relay HPSR is de-energized to close the NC contact. When sufficient pressure is available the high-heat pressure switch HPS closes, and the high-heat gas valve solenoid GV-HI is energized. The furnace control CPU begins a 15-second prepurge period after the low-heat pressure switch LPS closes. If the high-heat pressure switch HPS fails to close and the low-heat pressure switch LPS closes, the furnace will operate at low-heat gas flow rate until the high-heat pressure switch closes for a maximum of 2 minutes after ignition.
b. **Igniter Warm-Up** - At the end of the prepurge period, the Hot-Surface Igniter HSI is energized for a 17-second igniter warm-up period.
c. **Trial-For-Ignition Sequence** - When the igniter warm-up period is completed the main gas valve relay contact GVR closes to energize the gas valve solenoid GV-M. The gas valve solenoid GV-Mpermits gas flow to the burners where it is ignited. After 5 seconds, the igniter HSI is de-energized and a 2-second Flame-Proving period begins. The HSI igniter will remain energized until the flame is sensed or until the 2-second flame proving period begins. If the furnace control CPU selects high-heat operation, the high-heat gas valve solenoid GV-HI is also energized.

d. **Flame-Proving -** When the burner flame is proved at the flame-proving sensor electrode FSE, the inducer motor IDM switches to low-speed, unless operating in high heat, and the furnace control CPU begins the blower-ON delay period and continues to hold the gas valve GV-M open. If the burner flame is not proved within two seconds, the control CPU will close the gas valve GV-M, and the control CPU will repeat the ignition sequence for up to three more Trials-For-Ignition before going to Ignition-Lockout. **Lockout will be** reset automatically after three hours, by momentarily interrupting 115 vac power to the furnace, or by interrupting 24 vac power at SEC1 or SEC2 to the furnace control CPU (not at W/W1, G, R, etc.).
If flame is proved when flame should not be present, the furnace control CPU will lock out of Gas-Heating mode and operate the inducer motor IDM on high speed until flame is no longer proved.

e. **Blower-On delay** – If the burner flame is proven the blower-ON delay for low-heat and high-heat are as follows:
Low-heat – 45 seconds after the gas valve GV-M is opened the blower motor BLWM is turned ON at low-heat airflow.
High-heat – 25 seconds after the gas valve GV-M is opened the BLWM is turned ON at high-heatairflow.
Simultaneously, the humidifier terminal HUM and electronic air cleaner terminal EAC-1 are energized and remain energized throughout the heating cycle.

f. **Switching from Low- to High-Heat -** If the furnace control CPU switches from low-heat to highheat, the furnace control CPU will switch the inducer motor IDM speed from low to high. The highheat pressure switch relay HPSR is de-energized to close the NC contact. When sufficient pressure is available the high-heat pressure switch HPS closes, and the high-heat gas valve solenoid GV-HI is energized. The blower motor BLWM will transition to high-heat airflow five seconds after the furnace control CPU switches from low-heat to high-heat.

g. **Switching from High- to Low-Heat -** The furnace control CPU will not switch from high-heat to low-heat while the thermostat R to W circuit is closed when using a single-stage thermostat.

h. **Blower-Off Delay -** When the thermostat is satisfied, the R to W circuit is opened, de-energizing the gas valve GV-M, stopping gas flow to the burners, and de-energizing the humidifier terminal HUM. The inducer motor IDM will remain energized for a 5-second post-purge period. The blower motor BLWM and air cleaner terminal EAC-1 will remain energized at low-heat airflow or transition to lowheat airflow for 90, 120, 150, or 180 seconds (depending on selection at blower-OFF delay switches). The furnace control CPU is factory-set for a 120-second blower-OFF delay.

Two-Stage Thermostat and Two-Stage Heating

NOTE: In this mode the low-heat only switch SW1-2 must be ON to select the low-heat only operation mode in response to closing the thermostat R to W1 circuit. Closing the thermostat R to W1-and-W2 circuits always causes high-heat operation, regardless of the setting of the low-heat only switch.

The wall thermostat "calls for heat", closing the R to W1 circuit for low-heat or closing the R to W1-and-W2 circuits for high-heat. The furnace control performs a self-check, verifies the low-heat and high-heat pressure switch contacts LPS and HPS are open, and starts the inducer motor IDM in high-speed.

The start up and shut down functions and delays described in item 1. above apply to the 2-stage heating mode as well, except for switching from low- to high-Heat and vice versa.

a. **Switching from Low- to High-Heat -** If the thermostat R to W1 circuit is closed and the R to W2 circuit closes, the furnace control CPU will switch the inducer motor IDM speed from low to high. The high-heat pressure switch relay HPSR is de-energized to close the NC contact. When sufficient pressure is available the high-heat pressure switch HPS closes, and the high-heat gas valve solenoid GV-HI is energized. The blower motor BLWM will transition to high-heat airflow five seconds after the R to W2 circuit closes.

b. **Switching from High- to Low-Heat -** If the thermostat R to W2 circuit opens, and the R to W1 circuit remains closed, the furnace control CPU will switch the inducer motor IDM speed from high to low. The high-heat pressure switch relay HPSR is energized to open the NC contact and de-energize the high-heat gas valve solenoid GV-HI. When the inducer motor IDM reduces pressure sufficiently, the high-heat pressure switch HPS will open. The gas valve solenoid GV-M will remain energized as long as the low-heat pressure switch LPS remains closed. The blower motor BLWM will transition to low-heat airflow five seconds after the R to W2 circuit opens.

Cooling Mode

The thermostat "calls for cooling".

a. Single-Speed Cooling
The thermostat closes the R to G-and-Y circuits. The R to Y circuit starts the outdoor unit, and the R

to G-and-Y/Y2 circuits start the furnace blower motor BLWM on cooling airflow. Cooling airflow is based on the A/C selection shown in Table 1.

Table 1 – A/C or CF Airflow Selection Chart Based on 350 CFM/Ton SW1-5 OFF

BASED ON 350 CFM/TON (SETUP SWITCH SW1-5 OFF, SW4-3 OFF)

MODEL SIZE	SETUP SWITCH SW2 OR SW3 POSITIONS							
	OFF 1 2 3	OFF 1 2 3	OFF 1 2 3	OFF 1 2 3	OFF 1 2 3	OFF 1 2 3	OFF 1 2 3	OFF 1 2 3
070	DEF.	525[2]	700	875	1050[1]	1225	1225	1225
090	DEF.	525[2]	700	875	1050	1225	1400[1]	1400
110, 135, 155	DEF.	700	875[2]	1050	1225	1400	1750[1]	2100

1. DEFAULT A/C AIRFLOW WHEN A/C SWITCHES ARE IN OFF POSITION
2. DEFAULT CONT. FAN AIRFLOW WHEN CF SWITCHES ARE IN OFF POSITION

A13354

The electronic air cleaner terminal EAC-1 is energized with 115 vac when the blower motor BLWM is operating.

When the thermostat is satisfied, the R to G-and-Y circuits are opened. The outdoor unit will stop, and the furnace blower motor BLWM will continue operating at cooling airflow for an additional 90 seconds. Jumper Y/Y2 to DHUM to reduce the cooling off-delay to 5 seconds. (See Fig. 1.)

Single-Stage Thermostat and Two-Speed Cooling (Adaptive Mode)

This furnace can operate a two-speed cooling unit with a single-stage thermostat because the furnace control CPU includes a programmed adaptive sequence of controlled operation, which selects low-cooling or high-cooling operation. This selection is based upon the stored history of the length of previous cooling period of the single-stage thermostat.

NOTE: The air conditioning relay disable jumper ACRDJ must be connected to enable the adaptive cooling mode in response to a call for cooling. (See Fig. 1.) When in place the furnace control CPU can turn on the air conditioning relay ACR to energize the Y/Y2 terminal and switch the outdoor unit to high-cooling.

The furnace control CPU can start up the cooling unit in either low- or high-cooling. If starting up in low-cooling, the furnace control CPU determines the low-cooling on-time (from 0 to 20 minutes) which is permitted before switching to high-cooling.

If the power is interrupted, the stored history is erased and the furnace control CPU will select low-cooling for up to 20 minutes and then energize the air conditioning relay ACR to energize the Y/Y2 terminal and switch the outdoor unit to high-cooling, as long as the thermostat continues to call for cooling. Subsequent selection is based on stored history of the thermostat cycle times.

The wall thermostat "calls for cooling", closing the R to G-and-Y circuits. The R to Y1 circuit starts the outdoor unit on low-cooling speed, and the R to G-and-Y1 circuits starts the furnace blower motor BLWM at low-cooling airflow which is the true on-board CF selection as shown in Table 1.

If the furnace control CPU switches from low-cooling to high-cooling, the furnace control CPU will energize the air conditioning relay ACR. When the air conditioning relay ACR is energized the R to Y1-and-Y2 circuits switch the outdoor unit to high-cooling speed, and the R to G-and-Y1-and-Y/Y2 circuits transition the furnace blower motor BLWM to high-cooling airflow. High-cooling airflow is based on the A/C selection shown in Table 1.

NOTE: When transitioning from low-cooling to high-cooling the outdoor unit compressor will shut down for 1 minute while the furnace blower motor BLWM transitions to run at high-cooling airflow.

The electronic air cleaner terminal EAC-1 is energized with 115 vac whenever the blower motor BLWM is operating.

When the thermostat is satisfied, the R to G-and-Y circuit are opened. The outdoor unit stops, and the furnace blower BLWM and electronic air cleaner terminal EAC-1 will remain energized for an additional 90 seconds. Jumper Y1 to DHUM to reduce the cooling off-delay to 5 seconds. (See Fig. 1.)

Two-Stage Thermostat and Two-Speed Cooling

NOTE: The air conditioning relay disable jumper ACRDJ must be disconnected to allow thermostat control of the outdoor unit staging. (See Fig. 1.)

The thermostat closes the R to G-and-Y1 circuits for low-cooling or closes the R to G-and-Y1-and-Y2 circuits for high-cooling. The R to Y1 circuit starts the outdoor unit on low-cooling speed, and the R to G-and-Y1 circuit starts the furnace blower motor BLWM at low-cooling airflow which is the true on board CF selection as shown in Table 1. The R to Y1-and-Y2 circuits start the outdoor unit on high-cooling speed, and the R to G-and-Y/Y2 circuits start the furnace blower motor BLWM at high-cooling

airflow. High-cooling airflow is based on the A/C selection shown in Table 1.

The electronic air cleaner terminal EAC-1 is energized with 115 vac whenever the blower motor BLWM is operating.

When the thermostat is satisfied, the R to G-and-Y1 or R to G-and-Y1-and-Y2 circuits are opened. The outdoor unit stops, and the furnace blower BLWM and electronic air cleaner terminal EAC-1 will remain energized for an additional 90 seconds. Jumper Y1 to DHUM to reduce the cooling off-delay to 5 seconds. (See Fig. 1.)

Dehumidify Mode

The dehumidification output, DHUM on a humidity sensing thermostat should be connected to the furnace control thermostat terminal DHUM. When there is a dehumidify demand, the DHUM input is activated, which means 24 vac signal is removed from the DHUM input terminal. In other words, the DHUM input logic is reversed. The DHUM input is turned ON when no dehumidify demand exists. Once 24 vac is detected by the furnace control on the DHUM input, the furnace control operates in dehumidify mode. If the DHUM input is low for more than 48 hours, the furnace control reverts back to non-dehumidify mode.

The cooling operation described in item 3. above also applies to operation with a humidity sensing thermostat. The exceptions are listed below:

a. When the R to G-and-Y1 circuit is closed and there is a demand for dehumidification, the furnace blower motor BLWM will drop the blower airflow to 86% of low-cooling airflow which is the true onboard CF selection as shown in Table 1.
b. When the R to G-and Y/Y2 circuit is closed and there is a demand for dehumidification, the furnace blower motor BLWM will drop the blower airflow to 86% of high-cooling airflow. High-cooling airflow is based on the A/C selection shown in Table 1.
c. When the "call for cooling" is satisfied and there is a demand for dehumidification, the cooling bloweroff delay is decreased from 90 seconds to 5 seconds.

Super-Dehumidify Mode

Super-Dehumidify mode can only be entered if the furnace control is in the dehumidify mode and there is a demand for dehumidification. The cooling operation described in item 3. above also applies to operation with a humidity sensing thermostat. The exceptions are listed below:

a. When the R to Y1 circuit is closed, R to G circuit is open, and there is a demand for dehumidification, the furnace blower motor BLWM will drop the blower airflow to 65% of low-cooling airflow for a maximum of 10 minutes each cooling cycle or until the R to G circuit closes or the demand for dehumidification is satisfied. Low-cooling airflow is the true on-board CF selection as shown in Table 1.
b. When the R to Y/Y2 circuit is closed, R to G circuit is open, and there is a demand for dehumidification, the furnace blower motor BLWM will drop the blower airflow to 65% of high-cooling airflow for a maximum of 10 minutes each cooling cycle or until the R to G circuit closes or the demand for dehumidification is satisfied. High-cooling airflow is based on the A/C selection shown in Table 1.
c. When the "call for cooling" is satisfied and there is a demand for dehumidification, the cooling bloweroff delay is decreased from 90 seconds to 5 seconds.

Continuous Blower Mode

When the R to G circuit is closed by the thermostat, the blower motor BLWM will operate at continuous blower airflow. Continuous blower airflow selection is initially based on the CF selection shown in Table 1. Factory default is shown in Table 1. Terminal EAC-1 is energized as long as the blower motor BLWM is energized.

During a call for heat, the furnace control CPU will transition the blower motor BLWM to continuous blower airflow, low-heat airflow, or the mid-range airflow, whichever is lowest. The blower motor BLWM will remain ON until the main burners ignite then shut OFF and remain OFF for the blower-ON delay (45 seconds in low-heat, and 25 seconds in high-heat), allowing the furnace heat exchangers to heat up more quickly, then restarts at the end of the blower-ON delay period at low-heat or high-heat airflow respectively.

The blower motor BLWM will revert to continuous-blower airflow after the heating cycle is completed. In high-heat, the furnace control CPU will drop the blower motor BLWM to low-heat airflow during the selected blower-OFF delay period before transitioning to continuous-blower airflow.

When the thermostat "calls for low-cooling", the blower motor BLWM will switch to low-cooling airflow. When the thermostat is satisfied, the blower motor BLWM will operate an additional 90

seconds at low-cooling airflow before transitioning back to continuous-blower airflow.

When the thermostat "calls for high-cooling", the blower motor BLWM will switch to high cooling airflow. When the thermostat is satisfied, the blower motor BLWM will operate an additional 90 seconds at high-cooling airflow before transitioning back to continuous-blower airflow.

When the R to G circuit is opened, the blower motor BLWM will continue operating for an additional 5 seconds, if no other function requires blower motor BLWM operation.

Continuous Blower Speed Selection from Thermostat

To select different continuous-blower airflows from the room thermostat, momentarily turn off the FAN switch or push-button on the room thermostat for 1-3 seconds after the blower motor BLWM is operating. The furnace control CPU will shift the continuous-blower airflow from the factory setting to the next highest CF selection airflow as shown in Table 1. Momentarily turning off the FAN switch again at the thermostat will shift the continuous-blower airflow up one more increment. If you repeat this procedure enough you will eventually shift the continuous-blower airflow to the lowest CF selection as shown in Table 1. The selection can be changed as many times as desired and is stored in the memory to be automatically used following a power interruption.

NOTE: After adjusting the constant fan speed using the fan toggle method, further adjustment is only available by using the fan-toggle method. Adjusting the onboard CF switches on the furnace control will not affect the constant fan speed.

Heat Pump Defrost

When installed with a heat pump, the furnace control automatically changes the timing sequence to avoid long blower off times during demand defrost cycles. Whenever W/W1 is energized along with Y1 or Y/Y2, the furnace control CPU will transition to or bring on the blower motor BLWM at cooling airflow, low-heat airflow, or the mid-range airflow, whichever is lowest. The blower motor BLWM will remain on until the main burners ignite then shut OFF and remain OFF for 25 seconds before coming back on at heating airflow. When the W/W1 input signal disappears, the furnace control begins a normal inducer post-purge period while changing the blower airflow. If Y/Y2 input is still energized the furnace control CPU will transition the blower motor BLWM airflow to cooling airflow. If Y/Y2 input signal disappears and the Y1 input is still energized the furnace control CPU will transition the blower motor BLWM to low-cooling airflow. If both the Y1 and Y/Y2 signals disappear at the same time, the blower motor BLWM will remain on at low-heat airflow for the selected blower-OFF delay period. At the end of the blower-OFF delay, the blower motor BLWM will shut OFF unless G is still energized, in which case the blower motor BLWM will operate at continuous blower airflow.

Component Test

The furnace features a component test system to help diagnose a system problem in the case of a component failure. To initiate the component test procedure, ensure that there are no thermostat inputs to the control and all time delays have expired. Turn on setup switch SW1-6. (See Appendix A)

NOTE: The component test feature will not operate if the control is receiving any thermostat signals or until all time delays have expired.

The component test sequence is as follows:

a. The furnace control CPU turns the inducer motor ON at high-heat speed and keeps it ON through step c.
b. After waiting 10 seconds the furnace control CPU turns the hot surface igniter ON for 15 seconds, then OFF.
c. The furnace control CPU then turns the blower motor BLWM on at mid-range airflow for 15 seconds, then OFF.
d. After shutting the blower motor OFF the furnace control CPU switches the inducer to low-heat speed for 10 seconds, then OFF.

NOTE: The EAC terminals are energized when the blower is operating.

After the component test is completed , 1 or more status codes (11, 25, or 41) will flash. See Service Label on blower access panel or Service/Status Code Instructions for explanation of status codes.

NOTE: To repeat component test, turn setup switch SW1-6 to OFF and then back ON.

SERVICE/STATUS CODE INSTRUCTIONS

If status code recall is needed disconnect the "R" thermostat lead or ABCD connector, reset power, and put setup switch "SW1-1" in the ON position. To clear the status code history put setup switch "SW1-1" in the ON position and jumper thermostat terminals "R", "W/W1", and "Y/Y2" simultaneously until status code #11 is flashed.

LED CODE	STATUS

CONTINUOUS OFF - Check for 115 VAC at L1 and L2, and 24 VAC at SEC-1 and SEC-2.

CONTINUOUS ON - Control has 24 VAC power.

RAPID FLASHING - Line voltage (115 VAC) polarity reversed.

EACH OF THE FOLLOWING STATUS CODES IS A TWO DIGIT NUMBER WITH THE FIRST DIGIT DETERMINED BY THE NUMBER OF SHORT FLASHES AND THE SECOND DIGIT BY THE NUMBER OF LONG FLASHES.

11	**NO PREVIOUS CODE** – Stored status codes are erased automatically after 72 hours or as specified above.
12	**BLOWER ON AFTER POWER UP** – (115 VAC or 24 VAC) – Blower runs for 90 seconds, if unit is powered up during a call for heat (R-W/W1 closed) or (R-W/W1 opens) during the blower on-delay period.
13	**LIMIT CIRCUIT LOCKOUT**– Lockout occurs if the limit, draft safeguard, flame rollout, or blocked vent switch (if used) is open longer than 3 minutes or 10 successive limit trips occurred during high-heat. Control will auto reset after 3 hours. Refer to status code #33.
14	**IGNITION LOCKOUT** – Control will auto reset after 3 hours. Refer to status code #34.

15	**BLOWER MOTOR LOCKOUT** – Indicates the blower failed to reach 250 RPM or the blower failed to communicate within 30 seconds after being turned ON in two successive heating cycles. Control will auto reset after 3 hours. Refer to status code #41.
21	**GAS HEATING LOCKOUT**– Control will NOT auto reset. Check for: - Mis-wired gas valve. - Defective control (valve relay)
22	**ABNORMAL FLAME-PROVING SIGNAL** – Flame is proved while gas valve is de-energized. Inducer will run until fault is cleared. Check for: - Leaky gas valve. - Stuck-open gas valve.
23	**PRESSURE SWITCH DID NOT OPEN** – Check for: - Obstructed pressure tubing. - Pressure switch stuck closed.
24	**SECONDARY VOLTAGE FUSE IS OPEN** – Check for : - Short circuit in secondary voltage (24 VAC) wiring.
25	**MODEL SELECTION OR SETUP ERROR** – Either Indicates the model plug (PL4) is missing or incorrect or setup switch “SW1-1” or “SW1-6” is positioned improperly. If code flashes only 4 times on power-up control is defaulting to model selection stored in memory. Check the following: - Thermostat call with “SW1-1” ON. - Thermostat call with “SW1-6” ON. - “SW1-1” and “SW1-6” both ON together. - Wiring diagram for model plug number and resistance values if code flashes continuously. - Two different furnace models twinned.
31	**HIGH-HEAT PRESSURE SWITCH OR RELAY DID NOT CLOSE OR REOPENED** – Control relay may be defective or gas valve is mis-wired. Refer to status code #32.
32	**LOW-HEAT PRESSURE SWITCH DID NOT CLOSE OR REOPENED** – If open longer than five minutes, inducer shuts off for 15 minutes before retry. If opens during blower on-delay period , blower will come on for the selected blower off-delay. Check for: - Proper vent sizing. - Defective inducer motor. - Low inducer voltage (115 VAC). - Defective pressure switch. - Low inlet gas pressure (if LGPS used). - Excessive wind. - Inadequate combustion air supply. - Restricted vent. - Disconnected or obstructed pressure tubing.
33	**LIMIT CIRCUIT FAULT** – Indicates the limit, draft safeguard, flame rollout, or blocked vent switch (if used) is open or the furnace is operating in high-heat only mode due to 2 successive low heat limit trips. Blower will run for 4 minutes or until open switch remakes whichever is longer. If open longer than 3 minutes, code changes to lockout #13. If open less than 3 minutes status code #33 continues to flash until blower shuts off. Flame rollout switch requires manual reset. Check for: - Dirty filter or restricted duct system. - Restricted vent. - Loose blower wheel. - Proper vent sizing. - Defective switch or connections. - Excessive wind. - Inadequate combustion air supply (flame rollout switch open).

34	**IGNITION PROVING FAILURE** – Control will try three more times before lockout #14 occurs. If flame signal is lost during blower on-delay period, blower will come on for the selected blower off-delay. Check for: - Low inlet gas pressure. - Control ground continuity. - Gas valve defective or turned off. - Manual valve shut off. - Oxide buildup on flame sensor (clean with fine steel wool). - Proper flame sense micro amps (.5 micro amps DC min., 4.0 – 6.0 nominal). - Green/Yellow wire **MUST** be connected to furnace sheet metal. - Inadequate flame carryover or rough ignition. - Flame sensor must not be grounded.
41	**BLOWER MOTOR FAULT** – Indicates the blower failed to reach 250 RPM or the blower failed to communicate within the prescribed time limits. Thirty seconds after being turned ON or ten seconds during steady-state operation.
43	**LOW-HEAT PRESSURE SWITCH OPEN WHILE HIGH-HEAT PRESSURE SWITCH IS CLOSED** – Check for: - Disconnected or obstructed pressure tubing. - Low inlet gas pressure (if LGPS used). - Mis-wired pressure switches. - Low-heat pressure switch stuck open.
45	**CONTROL CIRCUITRY LOCKOUT** – Auto-reset after 1 hour lockout due to: - Flame sense circuit failure. - Gas valve relay stuck open. - Software check error. Reset power to clear lockout. Replace control if status code repeats.

COMPONENT TEST

To initiate the component test sequence, shut "OFF" the room thermostat or disconnect the "R" thermostat lead. If a User Interface is installed, remove the ABCD connector from the control board. Reset power and then put setup switch "SW1-6" in the ON position to start the component test sequence. Once initiated the furnace control will turn the inducer ON at high-heat speed. The inducer motor will run for the entire test. The hot surface igniter and blower motor will be turned ON for 15 seconds each. When the blower is turned OFF the inducer will be switched to low-speed for 10 seconds. When the component test is completed one or more of the following codes will flash.

CODE	DESCRIPTION
11	Indicates the blower motor tested OK. Visual check of inducer motor and hot surface igniter required.
25	SETUP ERROR – Same as code 25 above.
41	BLOWER MOTOR FAULT – Indicates blower motor failed test. Check blower, wiring, and furnace control.

To repeat component test turn setup switch "SW1-6" OFF and then back ON. After component test is completed put setup switch "SW1-6" in the OFF position and reconnect the "R" thermostat lead or ABCD connector.

START HERE

IF A PROBLEM EXISTS, THE SERVICE TECHNICIAN SHOULD ALWAYS BEGIN TROUBLESHOOTING HERE.

SPECIAL NOTE: ALL VOLTMETERS ARE NOT THE SAME, YOUR VOLTAGE READINGS WILL VARY. THIS APPLIES TO THE ENTIRE CONTENT OF THIS TROUBLESHOOTING MANUAL. THEY ARE NOT ABSOLUTE VALUES. CORRECT 115-VAC VOLTAGE, CURRENT, AND POWER MEASUREMENTS CANNOT BE TAKEN ON VARIABLE SPEED FURNACES UNLESS USING A TRUE RMS METER.

STEP	ACTION	YES	NO	GO TO
1.	Remove main furnace door first. DO NOT REMOVE BLOWER ACCESS PANEL! Record status of AMBER LED. See Service/Status Code Instructions. Is AMBER LED status light on?	2	19	
2.	Is the AMBER LED status light blinking rapidly without a pause?	3	4	
3.	Go to the page number indicated in the Index for RAPID FLASHING LED.			INDEX
4.	Is the AMBER LED status light blinking ON/OFF slowly with a combination of short and long flashes?	5	7	
5.	Determine status code. The status code is a 2 digit number with the first digit determined by the number of short flashes and the second digit by the number of long flashes.			6
6.	Go to page number indicated in the Index for the section covering the status code.			INDEX
7.	To retrieve previous codes, no thermostat inputs to the control must be present and all time delays must have expired. Disconnect the User Interface ABCD connector (if used) or the R thermostat lead (if used) from the furnace control board and wait for the blower to turn off if it is running. Put setup switch SW1-1 in the ON position and record the status codes listed in the status code history. The status codes will flash in the order of occurrence. Read status codes until an 11 code flashes. After the 11 code flashes the status codes will repeat.			8
8.	Was there a previous status code other than code 11? NOTE: Status codes are erased after 72 hours or can be manually erased by putting setup switch SW1-1 in the ON position and jumpering R, W/W1, and Y/Y2 simultaneously until status code 11 is flashed.	9	10	
9.	Go to page number indicated in the Index for the section covering the first previous status code.			INDEX
10.	Does the problem appear to be low cooling airflow?	11	12	
11.	Go to page number indicated in Index for the section covering IMPROPER COOLING AIRFLOW.			INDEX
12.	Set thermostat to call for heat and set the thermostat fan control to AUTO position if equipped.			13
13.	Does the furnace respond to the call for heat?	14	28	
14.	Observe operation of furnace for 20 minutes or until AMBER LED status light starts blinking.			15
15.	Does the AMBER LED status light blink ON/OFF slowly with a combination of short and long flashes?	5	16	
16.	Is the temperature rise below the range specified on the rating plate when the unit is operating in high heat? NOTE: If the temperature rise is above the range specified on the rating plate refer to the Start-Up and Adjustment section in the Installation, Start-Up, and Operating Instructions.	17	18	
17.	Go to page number indicated in Index for the section covering HIGH HEAT TEMPERATURE RISE TOO LOW (COLD BLOW).			INDEX
18.	Go to page number indicated in Index for CLEANUP AND START-UP INSTRUCTIONS.			INDEX
19.	Make sure power is being supplied to the furnace.			20
20.	Check fuses, breakers, or manual disconnects to be sure they are correctly set. If not, reset them and go back to step 1.			21
21.	Remove blower access panel and depress door switch. Use a piece of tape to hold switch closed.			22
22.	Is 115-vac across L1 and L2?	24	23	
23.	Turn power off. Check continuity of power leads and door switch. If necessary repair power leads and/or replace door switch.			18

STEP	ACTION	YES	NO	GO TO
24.	Is 24-vac across SEC-1 and SEC-2?	25	26	
25.	Replace the variable speed furnace control.			18
26.	Is 115-vac across the transformer leads?	27	25	
27.	Replace the transformer.			18
28.	Is 24-vac across W/W1 and COM-24V on the variable speed furnace control? NOTE: You will not be able to check for voltage across W/W1 and COM-24V if the furnace is connected to a User Interface at the ABCD Connector. Go to Step 29.	30	29	
29.	You have a defective thermostat, or a break in wiring between thermostat and furnace. Fix problem.			18
30.	Disconnect all thermostat leads or the User Interface ABCD connector from the thermostat terminal block and jumper R to W/W1. Does the furnace respond to the call for heat?	31	25	
31.	You have an incompatible thermostat. Do any of the following: 1. Wire the thermostat C terminal to COM-24V. 2. Isolate the W/W1 input with a relay. 3. Install ballast resistor across W/W1 and COM-24V. 4. Replace the thermostat with a compatible model.			18

RAPID FLASHING AMBER LED - Indicates line voltage polarity is reversed, or the transformers are out of phase in twinned units.

STEP	ACTION	YES	NO	GO TO
1.	Is this furnace twinned with another furnace?	7	2	
2.	Remove blower access panel and depress door switch. Use a piece of tape to hold switch closed.			3
3.	Is 115-vac across NEUTRAL-L2 and chassis ground?	4	6	
4.	Line voltage polarity is reversed. Fix problem.			5
5.	Go to page number indicated in Index for CLEANUP AND START-UP INSTRUCTIONS.			INDEX
6.	Replace the variable speed furnace control.			5
7.	Remove blower access panels and depress door switch in each unit. Use tape to hold switches closed.			8
8.	Is the AMBER LED status light blinking rapidly in only one of the twinned units?	9	16	
9.	Are the fuses, breakers, or manual disconnects to the problem unit correctly set?	11	10	
10.	Fix problem.			5
11.	Are the Auxiliary Limit switches properly set?	12	10	
12.	Do you have 115-vac across L1 and NEUTRAL-L2 in the problem unit?	13	15	
13.	Do you have 24-vac across SEC-1 and SEC-2 in the problem unit?	6	14	
14.	Replace the transformer.			5
15.	Turn power off to both units. Check continuity of power leads and door switch in the problem unit. If necessary repair power leads and/or replace door switch in the problem unit.			5
16.	Check the furnace circuit breaker location in the service panel. On single-phase (residential) systems, each furnace circuit breaker should be located directly across from each other in service panel, or each furnace circuit breaker should be located on the same side of service panel, but must skip 1 space to be connected to the same leg of the 1-phase power supply. On 3-phase (commercial) systems, each furnace circuit breaker should be located directly across from each other in service panel, or each furnace circuit breaker should be located on the same side of service panel, but must skip 2 spaces to be connected to the same leg of the 3-phase power supply.			17
17.	Check the 115-vac power lead connections at the variable speed furnace control of each furnace. The BLACK lead goes to L1 and the WHITE lead goes to NEUTRAL-L2.			18

STEP	ACTION	YES	NO	GO TO
18.	Check the 115-vac transformer lead connections at the variable speed furnace control of each furnace. The BLACK lead goes to L1 and the WHITE lead goes to NEUTRAL-L2.			19
19.	If the circuit breaker location and the 115-vac wiring is correct reverse the transformer secondary lead connections SEC-1 and SEC-2 in the MAIN furnace.			5

IMPROPER COOLING AIR FLOW - Generally, this indicates the Y/Y2 thermostat lead is not properly connected.

STEP	ACTION	YES	NO	GO TO
1.	Remove blower access panel and depress door switch. Use a piece of tape to hold switch closed.			2
2.	Set thermostat to call for cooling. If thermostat does not have G connection jumper across thermostat terminals R and G.			3
3.	Make sure thermostat fan control is in the AUTO position if equipped.			4
4.	Do you have 24-vac across Y/Y2 and COM-24V on the variable speed furnace control?	8	5	
5.	You have a defective thermostat, or a break in the wiring between the thermostat and the furnace, or the Y/Y2 thermostat terminal is not wired to the thermostat.			6
6.	Fix the problem.			7
7.	Go to page number indicated in Index for CLEANUP AND START-UP INSTRUCTIONS.			INDEX
8.	Are the air conditioning airflow select switches A/C set to the proper airflow as required by the condensing unit? Typical airflow is based on 350 CFM/TON (See Table 2 and 3.)	10	9	
9.	Set the air conditioning airflow select switches A/C to the proper airflow as required by the condensing unit. (See Table 2 and 3.)			7
10.	Disconnect the G thermostat lead or jumper if used.			11
11.	Does the blower motor turn off in 5 seconds when the G thermostat lead is disconnected? NOTE: When using a humidity sensing thermostat, the blower may change airflow when the G thermostat lead is disconnected and a call to dehumidify is active.	12	13	
12.	Replace the variable speed furnace control.			7
13.	Reconnect the G thermostat lead or jumper and observe operation of furnace in cooling mode for 10 minutes.			14
14.	Does the furnace operate properly in cooling mode?	15	16	
15.	- Check outdoor unit for correct suction pressure and verify charge. - Check filter(s) and ductwork for restrictions. - Check furnace coil.			INDEX
16.	Does the AMBER LED abruptly shut off as the blower comes up to speed?	17	24	
17.	Do you have less than 17 vac between R and COM-24V on the variable speed furnace control?	18	24	
18.	Do you have less than 90 vac between L1 and NEUTRAL-L2 on the variable speed furnace control?	19	20	
19.	Make sure the wire gage between main fuse box and furnace complies with wire size specification in Installation, Start-Up, and Operating Instructions.			6
20.	Disconnect the R thermostat lead.			21
21.	Do you have less than 17 vac between R and COM-24V on the variable speed furnace control?	22	23	
22.	Replace transformer.			7
23.	Check the thermostat wire gage between furnace and thermostat, and furnace and outdoor unit. It is recommended that AWG No. 18 color-coded copper thermostat wire be used for lengths up to 100 ft. For wire lengths over 100 ft, use AWG No. 16 wire.			6
24.	Is Status Code 41 flashing?	25	26	
25.	Go to the page number indicated in the Index for Status Code 41.			INDEX
26.	- Check outdoor unit for correct suction pressure and verify charge. - Check furnace coil.			7

STEP	ACTION	YES	NO	GO TO
27.	Is a User Interface connected to the ABCD connector	28	2	
28.	The wrong size outdoor unit may have been selected in the User Interface. You will need to select the proper size of the outdoor unit in the User Interface. If set properly then the User Interface may be reducing airflow for dehumidification.			7

Table 2 – Cooling Tonnage vs Airflow (CFM)

AIR CONDITIONING TONS (12,000 Btu/hr)	AIRFLOW (CFM)	070 Model	090 Model	110, 135, & 155 Models
1-1/2	525	X	X	
2	700	X	X	X
2-1/2	875	X	X	X
3	1050	X	X	X
3-1/2	1225	X	X	X
4	1400		X	X
5	1750			X
6	2100			X

X — Indicates an allowable selection.

Table 3 – A/C or CF Airflow Selection Chart Based on 350 CFM/Ton

BASED ON 350 CFM/TON (SETUP SWITCH SW1-5 OFF, SW4-3 OFF)

MODEL SIZE	SETUP SWITCH SW2 OR SW3 POSITIONS							
	OFF 1 2 3	OFF 1 2 3	OFF 1 2 3	OFF 1 2 3	OFF 1 2 3	OFF 1 2 3	OFF 1 2 3	OFF 1 2 3
070	DEF.	525[2]	700	875	1050[1]	1225	1225	1225
090	DEF.	525[2]	700	875	1050	1225	1400[1]	1400
110, 135, 155	DEF.	700	875[2]	1050	1225	1400	1750[1]	2100

1. DEFAULT A/C AIRFLOW WHEN A/C SWITCHES ARE IN OFF POSITION
2. DEFAULT CONT. FAN AIRFLOW WHEN CF SWITCHES ARE IN OFF POSITION

A13354

HIGH HEAT TEMPERATURE RISE TOO LOW - Generally, this indicates the HI solenoid in gas valve GV has failed or the furnace is extremely under-fired.

STEP	ACTION	YES	NO	GO TO
1.	Remove the blower access panel. Disconnect User Interface ABCD connector (if used) or the R thermostat lead (if used) from the furnace control board. If setup switch SW1-2 is ON then set it to OFF.			2
2.	Depress the door switch. Use piece of tape to hold it closed.			3
3.	Set thermostat to call for heat or jumper R and W/W1 thermostat terminals.			4
4.	When the furnace is running in low heat, clock the low heat gas rate. You have 16 minutes on this first call for heat before unit switches to high heat. On propane installations check the manifold pressure.			5
5.	When the furnace is running in high heat, clock the high heat gas rate. On propane installations check the manifold pressure.			6
6.	Is the high heat rate approximately the same as the low heat rate?	7	11	
7.	Do you have 24 vac across gas valve terminals HI and COM-24V on 2-stage gas valve during high heat?	10	8	
8.	You have an open wire or bad terminal on the BROWN wire from the high heat pressure switch HPS to the gas valve GV. Repair it or replace the harness.			9
9.	Go to the page number indicated in Index for the CLEANUP AND START-UP INSTRUCTIONS.			INDEX
10.	Replace the gas valve.			9
11.	Is the high heat rate within 2% of that specified on the rating plate?	13	12	
12.	Ensure the gas inlet pressure and burner orifice are correct. Then adjust the gas valve to the proper rate. If it cannot be adjusted to the proper rate, replace the gas valve.			9

STEP	ACTION	YES	NO	GO TO
13.	Is outdoor condensing unit operating during heating cycle?	16	14	
14.	Check temperature rise and external static pressure with blower access panel in place. Temperature rise should be mid range or higher than midpoint of range stated on furnace rating plate. External static pressure must not exceed .7 in.w.c. If return temperature is below 60 deg. F condensation may form on heat exchangers. If left uncorrected failure will result.			15
15.	Check return air ducts in unheated spaces for leaks.			9
16.	Fix problem.			9

STATUS CODE 11

NO PREVIOUS CODE - Stored status codes are erased after 72 hours or can be cleared by jumpering R, W/W1, and Y/Y2 thermostat leads while setup switch SW1-1 is ON. Run system through a heating or cooling cycle to check system.

This usually indicates 1 of the following:

- The status history has been cleared and setup switch SW1-1 is in the ON position.
- Component test was successfully completed and setup switch SW1-6 is in the ON position.

STEP	ACTION	YES	NO	GO TO
1.	Remove the blower access panel, depress the door switch. Use piece of tape to hold it closed.			2
2.	Is setup switch SW1-1 in the ON position.	3	5	
3.	Put setup switch SW1-1 in the OFF position.			4
4.	Go to the page number indicated in Index for the CLEANUP AND START-UP INSTRUCTIONS.			INDEX
5.	Is setup switch SW1-6 in the ON position.	6	7	
6.	Put setup switch SW1-6 in the OFF position.			4
7.	Jiggle setup switches SW1-1 and SW1-6 back and forth. If status code 11 continues to flash replace the variable speed furnace control			4

STATUS CODE 12

BLOWER ON AFTER POWER UP - Blower will run for 90 seconds when furnace power is interrupted and later restored during a call for heat (R-W/W1 closed) or if the call for heat is interrupted (R-W/W1 opens) during the blower on-delay period. If this status code repeats every couple of minutes it is probably caused by a direct short in the pressure switch circuits, gas valve GV, wiring to gas valve GV, or humidifier coil.

STEP	ACTION	YES	NO	GO TO
1.	Remove the blower access panel and disconnect the User Interface ABCD connector (if used) or the R thermostat lead (if used) from the furnace control board.			2
2.	Depress the door switch. Use piece of tape to hold it closed.			3
3.	Set thermostat to call for heat and set the thermostat fan control to AUTO position if equipped. Then reconnect the W/W1 thermostat lead to the variable speed furnace control.			4
4.	Does the furnace keep repeating the following cycle? Induced draft motor IDM runs, induced draft motor IDM stops, blower motor BLWM runs for 90 seconds while AMBER LED status light flashes status code 12.	5	20	
5.	Do you have less than 17-vac across R and COM-24V on the variable speed furnace control?	6	14	
6.	Do you have less than 90-vac across L1 and NEUTRAL-L2 on the variable speed furnace control?	7	10	
7.	Make sure wire gage between main fuse box and furnace complies with wire size specification in Installation, Start-Up, and Operating Instructions.			8
8.	Fix problem.			9
9.	Go to the page number indicated in Index for the CLEANUP AND START-UP INSTRUCTIONS.			INDEX
10.	Disconnect the R thermostat lead.			11
11.	Do you have less than 19-vac across R and COM-24V on the variable speed furnace control?	12	13	
12.	Replace transformer.			9
13.	The thermostat and/or thermostat wires are loading down the transformer. Replace the thermostat or repair thermostat wires.			9
14.	Does the hot surface igniter HSI come on during the cycle?	15	19	
15.	Disconnect the humidifier lead from HUM terminal on variable speed furnace control.			16
16.	Does the furnace still alternately cycle induced draft motor IDM and blower motor BLWM as described in Step 4.	18	17	

STEP	ACTION	YES	NO	GO TO
17.	There is a direct short in wiring to humidifier solenoid coil, diode bridge(if used), or humidifier solenoid coil.			8
18.	There is a short in the gas valve GV or wiring to gas valve GV. Refer to Appendix E to check gas valve GV.			8
19.	There is a direct short in the ORANGE wire from the low heat pressure switch LPS.			8
20.	While the unit is operating in low heat jumper R and W2 thermostat terminals.			21
21.	Does the furnace abruptly shut down with no inducer post purge and then run blower motor BLWM for 90 seconds while AMBER LED status light flashes status code 12.	22	26	
22.	Disconnect BROWN wire to gas valve GV.			23
23.	Does the furnace still abruptly shut down as described in Step 21.	25	24	
24.	Replace gas valve.			9
25.	There is a direct short to ground in the GRAY or BROWN wires connected to the high heat pressure switch HPS.			8
26.	Power to the furnace was probably interrupted or line voltage was too low during a call for heat. This is normal operation. Go to the page number indicated in Index for the CLEANUP AND START-UP INSTRUCTIONS.			INDEX

STATUS CODE 13

LIMIT CIRCUIT LOCKOUT – Lockout occurs if the limit, draft safeguard, flame rollout, or blocked vent switch (if used) is open longer than 3 minutes or 10 successive limit trips occurred during high-heat. The variable speed furnace control will auto-reset in 3 hours. Flame roll-out switch FRS and blocked vent switch BVS (if used) requires manual-reset.

STEP	ACTION	YES	NO	GO TO
1.	Remove the blower access panel. Disconnect the User Interface ABCD connector (if used) or the R thermostat lead (if used) from the furnace control board.			2
2.	Depress the door switch. Use piece of tape to hold it closed.			3
3.	Does status code 33 flash?	11	4	
4.	Does a different status code flash?	5	6	
5.	Go to page number indicated in the Index for the section covering the status code.			INDEX
6.	Set thermostat to call for heat or jumper R and W/W1 thermostat terminals.			7
7.	Observe the furnace operation for 25 minutes or until status code starts flashing.			8
8.	Does status code 33 flash?	36	9	
9.	Does a different status code flash?	5	10	
10.	Go to page number indicated in Index for CLEANUP AND START-UP INSTRUCTIONS.			INDEX
11.	Is 24-vac across connector terminal PL1-6 and COM-24V on variable speed furnace control?	13	12	
12.	Replace the variable speed furnace control.			10
13.	Is 24-vac across connector terminal PL1-8 and COM-24V on variable speed furnace control?	12	14	
14.	Turn power off.			15
15.	Do you have continuity across limit switch(es) LS?	17	16	
16.	Replace limit switch LS.			10
17.	Do you have continuity across the flame rollout switch(es) FRS?	25	18	
18.	Can flame rollout switch(es) FRS be reset?	20	19	
19.	Replace flame rollout switch FRS.			10
20.	Reset flame rollout switch(es) FRS, turn power on, and observe furnace operation for (2) 15 minute cycles.			21
21.	Does the flame rollout switch(es) FRS trip again?	23	22	
22.	Does a different status code flash?	5	10	
23.	You have inadequate combustion-air supply. This may be caused by: - Poor burner, manifold, or orifice alignment. - Blocked heat exchanger. - Leak in heat exchanger. - Furnace installed in a negative pressure area.			24
24.	Fix problem			10
25.	Do you have a blocked vent safety switch BVSS?	26	33	
26.	Do you have continuity across the blocked vent safety switch BVSS?	33	27	
27.	Can blocked vent safety switch BVSS be reset?	29	28	
28.	Replace blocked vent safety switch BVSS.			10

STEP	ACTION	YES	NO	GO TO
29.	Reset blocked vent safety switch BVSS, turn power on, and observe furnace operation for (2) 15 minute cycles.			30
30.	Does the blocked vent safety switch BVSS trip again?	32	31	
31.	Does a different status code flash?	5	10	
32.	You may have excessive restriction in vent pipe. Check for the following: - Restriction in vent pipe. - Proper vent sizing for installation. - Elbow baffle installed. NOTE: If there are no signs of restriction then check for excessive wind. If there was no excessive wind then replace the blocked vent safety switch BVSS.			24
33.	Do you have continuity across the draft safeguard switch DSS?	35	34	
34.	Replace draft safeguard switch DSS.			10
35.	You have an open RED wire or bad terminal in limit circuit. Repair wire or replace harness.			10
36.	Does furnace have the proper limit switch(es), rear baffle, and blower shelf baffle? If so, are the heat exchangers properly aligned?	37	24	
37.	Remove tape from door switch, turn power off at main disconnect, and remove jumper across R and W/W1.			38
38.	Is blower wheel firmly mounted on motor shaft?	39	24	
39.	Does the model plug PL4 match the part number specified on the Model Plug Chart in upper left hand corner of wiring schematic?	41	40	
40.	Replace model plug.			10
41.	Lockout may have been caused by excessive restriction in vent pipe. Check for the following: - Restriction in vent pipe. - Proper vent sizing for installation. - Elbow baffle installed. NOTE: If there are no signs of restriction then check for excessive wind. If there was no excessive wind then make sure the furnace has the proper draft safeguard switch DSS.			42
42.	Lockout may have been caused by excessive return-air restriction. Check filter and return-air grilles for blockage. Add more return-air openings if necessary. Use Appendix D to evaluate external static pressure. Reference status code 33 for additional troubleshooting steps.			10

STATUS CODE 14

IGNITION LOCKOUT - This status code indicates the furnace failed to ignite gas and/or prove flame in 4 attempts. The variable speed furnace control will auto-reset in 3 hours. If the inducer motor is not running during lockout refer to status code 34.

If the inducer motor is running at full speed during lockout this indicates that flame sense was lost 3 times within 60 minutes of cumulative gas valve operating time after the gas valve was already ON for 70 seconds. It is usually caused by flame rollout that causes loss of flame sense before the flame rollout switch can trip. This can happen when the vent pipe becomes disconnected inside the furnace or disconnected near the furnace in a small enclosed space like a closet.

STATUS CODE 15

BLOWER MOTOR LOCKOUT - This status code indicates the blower failed to reach 250 RPM or the blower failed to communicate to the variable speed furnace control within 30 seconds after being turned ON in two successive heating cycles. Control will auto reset after 3 hours. Refer to status code 41.

STATUS CODE 21

GAS HEATING LOCKOUT - This status code indicates the main gas valve relay MGVR on the variable speed furnace control is stuck closed or there is a mis-wire/short to gas valve wiring. Make sure the BLUE wire goes to the gas valve M terminal and the GREEN/YELLOW wire goes to the gas valve C terminal. The variable speed furnace control will NOT auto-reset.

STEP	ACTION	YES	NO	GO TO
1.	Turn power off and disconnect the User Interface ABCD connector (if used) or the R thermostat lead (if used) from the furnace control board. Then turn power back on.			2
2.	Does status code 21 flash?	3	6	
3.	There is a mis-wire or short to gas valve wiring.			4
4.	Fix problem			5
5.	Go to page number indicated in Index for CLEANUP AND START-UP INSTRUCTIONS.			INDEX
6.	Does a different status code flash?	7	8	
7.	Go to page number indicated in the Index for the section covering the status code.			INDEX
8.	Remove blower access panel and depress door switch. Use a piece of tape to hold switch closed.			9
9.	Jumper R and W/W1 thermostat terminals.			10
10.	Does status code 21 start flashing when the low heat pressure switch LPS makes?	11	12	
11.	Replace the variable speed furnace control.			5
12.	Does a different status code flash?	7	13	
13.	Disconnect the jumper wire across R and W/W1 thermostat terminals and wait until the blower stops.			14
14.	Jumper R, W/W1, and W2 thermostat terminals on the variable speed furnace control.			15
15.	Does status code 21 start flashing when the high heat pressure switch HPS makes?	16	17	
16.	The BLUE and GREEN wires to gas valve GV are reversed.			4
17.	Cycle the furnace several times to check for intermittent operation.			18
18.	Does status code 21 ever flash?	11	19	
19.	Go to page number indicated in Index for CLEANUP AND START-UP INSTRUCTIONS. If the problem persists on an intermittent basis, replace the variable speed furnace control. If problem still persists on an intermittent basis after replacing the variable speed furnace control, contact your distributor.			INDEX

STATUS CODE 22

ABNORMAL FLAME-PROVING SIGNAL - This status code indicates the flame signal was sensed while gas valve GV was de-energized. The inducer will run until the fault is cleared.

STEP	ACTION	YES	NO	GO TO
1.	Turn off gas to the furnace by shutting off the external manual shut-off valve.			2
2.	Does status code 22 stop flashing?	3	4	
3.	Replace the gas valve.			5
4.	Replace the variable speed furnace control.			5
5.	Go to page number indicated in Index for CLEANUP AND START-UP INSTRUCTIONS.			INDEX

STATUS CODE 23

PRESSURE SWITCH DID NOT OPEN - This status code indicates the low or high heat pressure switch LPS or HPS is made when a call for heat is initiated. The variable speed furnace control will flash status code 23 until the switch opens, then cycle begins.

STEP	ACTION	YES	NO	GO TO
1.	Turn power off, remove blower access panel, and disconnect R thermostat lead (if used) or the User Interface ABCD connector (if used) from the furnace control board.			2
2.	Turn power on and depress door switch. Use a piece of tape to hold switch closed.			3
3.	Jumper R and W/W1 thermostat terminals.			4
4.	Does status code 23 flash?	8	5	
5.	Does a different status code flash?	6	7	
6.	Go to page number indicated in the Index for the section covering the status code.			INDEX
7.	Go to page number indicated in Index for CLEANUP AND START-UP INSTRUCTIONS.			INDEX
8.	Is the inducer motor ON?	15	9	

STEP	ACTION	YES	NO	GO TO
9.	Is 24-vac across ORANGE wire on the low heat pressure switch LPS and COM-24V on variable speed furnace control?	16	10	
10.	Is 24-vac across connector terminal PL1-4 and COM-24V on variable speed furnace control?	11	13	
11.	The main harness is mis-wired.			7
12.	Rewire low heat pressure switch LPS per the wiring diagram.			7
13.	Is 24-vac across BROWN wire on the high heat pressure switch HPS and COM-24V on variable speed furnace control?	18	14	
14.	Is 24-vac across connector terminal PL1-3 and COM-24V on variable speed furnace control?	11	15	
15.	Replace variable speed furnace control.			7
16.	Is the low heat pressure switch LPS wired correctly?	17	12	
17.	Replace the low heat pressure switch or the pressure switch assembly.			7
18.	Is the high heat pressure switch HPS wired correctly?	20	19	
19.	Rewire high heat pressure switch HPS per wiring diagram.			7
20.	Replace the high heat pressure switch or the pressure switch assembly and replace the variable speed furnace control.			7

STATUS CODE 24

SECONDARY VOLTAGE FUSE IS OPEN - Indicates fuse is open and there is a short in low-voltage wiring.

STEP	ACTION	YES	NO	GO TO
1.	Turn power off and remove the blower access panel.			2
2.	Is secondary voltage fuse blown? Check continuity to make sure.	5	3	
3.	Replace variable speed furnace control.			4
4.	Replace secondary voltage fuse if necessary then go to page number indicated in Index for CLEANUP AND START-UP INSTRUCTIONS.			INDEX
5.	Disconnect the User Interface ABCD connector (if used) or all thermostat leads (if used) from the furnace control board. and replace secondary voltage fuse.			6
6.	Replace the fuse, turn power on and depress door switch. Use a piece of tape to hold switch closed.			7
7.	Does status code 24 flash?	8	12	
8.	Turn power off and disconnect PL1 from variable speed furnace control.			9
9.	Do you have continuity between either RED wire connected to the limit circuit and chassis ground?	10	3	
10.	You have a short circuit in the limit switch circuit. This includes limit switch(es) LS, draft safeguard switch DSS, and flame roll-out switch(es) FRS.			11
11.	Fix problem.			4
12.	Disconnect the pressure tube from the collector box and jumper R and W/W1 thermostat terminals.			13
13.	Does status code 24 begin flashing when W/W1 is energized?	14	21	
14.	Turn power off and disconnect PL1 from variable speed furnace control.			15
15.	Do you have continuity between the YELLOW wire connected to the low heat pressure switch LPS and chassis ground?	16	3	
16.	You have a short circuit in the low heat pressure switch circuit.			11
17.	Does status code 24 begin flashing when the HUM terminal is energized? NOTE: On the variable speed furnace control the HUM terminal is energized when the blower turns ON.	3	18	
18.	Disconnect jumper wire across R and W/W1 thermostat terminals and wait until inducer stops.			19
19.	Disconnect the pressure tube from the collector box and jumper R, W/W1, and W2 thermostat terminals.			20
20.	Does status code 24 begin flashing when W/W1 is energized?	34	37	
21.	Reconnect the pressure tube from the pressure switch assembly back to the collector box.			22
22.	Does status code 24 begin flashing when the low heat pressure switch LPS is energized?	23	26	
23.	Turn power off and disconnect PL1 from variable speed furnace control.			24

STEP	ACTION	YES	NO	GO TO
24.	Do you have continuity between the ORANGE wire connected to the low heat pressure switch LPS and chassis ground?	25	3	
25.	The ORANGE wire from low heat pressure switch LPS is shorting to ground. Replace or repair it.			11
26.	Does status code 24 begin flashing when the gas valve GV is energized?	27	17	
27.	Disconnect jumper wire across R and W/W1 thermostat terminals and replace secondary voltage fuse.			28
28.	Disconnect BLUE wire to gas valve GV and jumper R and W/W1 thermostat terminals.			29
29.	Does status code 34 flash? If not, status code 24 should occur when BLUE wire is energized.	33	30	
30.	Turn power off and disconnect PL1 from variable speed furnace control.			31
31.	Do you have continuity between the BLUE wire and chassis ground?	32	3	
32.	The BLUE wire to gas valve GV is shorting to ground. Replace or repair it.			11
33.	Replace gas valve GV.			4
34.	Turn power off and disconnect PL1 from variable speed furnace control.			35
35.	Do you have continuity between the GRAY wire connected to the high heat pressure switch HPS and chassis ground?	36	3	
36.	You have a short circuit in the high heat pressure switch circuit.			11
37.	Reconnect the pressure tube from the pressure switch assembly back to the collector box.			38
38.	Does status code 24 begin flashing when the high heat pressure switch HPS is energized?	39	56	
39.	Disconnect jumper wire across R, W/W1, and W2 thermostat terminals and replace secondary voltage fuse.			40
40.	Disconnect BROWN wire to gas valve GV and jumper R, W/W1, and W2 thermostat terminals.			41
41.	Does status code 24 begin flashing when the high heat pressure switch HPS is energized?	42	33	
42.	Turn power off and disconnect PL1 from variable speed furnace control.			43
43.	Do you have continuity between the BROWN wire and chassis ground?	44	3	
44.	The BROWN wire to high heat pressure switch HPS and gas valve GV is shorting to ground. Replace or repair it.			11
45.	Disconnect jumper wire across R, W/W1, and W2 thermostat terminals and wait until blower stops.			46
46.	Jumper R, G, and Y/Y2 thermostat terminals.			47
47.	Does status code 24 begin flashing when G and Y/Y2 are energized?	3	48	
48.	Reconnect the User Interface ABCD connector (if used) or all thermostat leads (if used) to the furnace control board. Do NOT reconnect the humidifier lead to the HUM terminal.			49
49.	Does status code 24 occur during heating cycle?	50	51	
50.	You have a defective thermostat or a short circuit in R, W/W1, or W2 wiring between thermostat, User Interface, furnace, and outdoor unit. If the furnace is twinned, also check the twinning kit relay TKR.			11
51.	Does status code 24 occur during cooling cycle?	52	53	
52.	You have a defective thermostat, short circuit in G, Y1, Y/Y2 or O wiring between thermostat and outdoor unit, or a short circuit in the outdoor unit contactor or reversing valve(heat pump only).			11
53.	Does problem usually occur in cooling mode?	54	55	
54.	Check outdoor unit contactor. Failure to pull in can cause excessive current draw on low-voltage circuit. This can be an intermittent problem.			11
55.	Reconnect humidifier and check for excessive current draw when the blower turns ON. If current draw is excessive check wiring to humidifier solenoid, diode bridge(if used), and humidifier solenoid.			11
56.	Continue to observe the furnace operation for 10 minutes.			57
57.	Does status code 24 flash after the blower comes on?	58	59	

STEP	ACTION	YES	NO	GO TO
58.	The insulation is loose and has shorted against the limit switch(es).			11
59.	Check for loose or torn insulation because it can cause intermittent occurrences of status code 24.			45

STATUS CODE 25

MODEL SELECTION OR SETUP ERROR – If status code 25 only flashes 4 times on power-up the variable speed furnace control is missing its model plug (PL4) and is defaulting to the model selection stored in memory.

If status code 25 flashes continuously it could indicate any of the following:

1. Model plug (PL4) is missing and there is no valid model stored in permanent memory. This will happen if you forget to install the model plug (PL4) on a service replacement board.
2. Thermostat call with SW1-1 ON.
3. Thermostat call with SW1-6 ON.
4. SW1-1 and SW1-6 both ON together.
5. Two different furnace models twinned.

STEP	ACTION	YES	NO	GO TO
1.	Turn power off, remove blower the blower access panel, and disconnect the User Interface ABCD connector (if used) or the R thermostat lead (if used) from the furnace control board.			2
2.	Turn power on and depress door switch. Use a piece of tape to hold switch closed.			3
3.	Does status code 25 flash only 4 times on power-up?	4	6	
4.	The model plug is missing or invalid but the control will default to the model stored in memory. The furnace will operate properly as if the model plug was installed. If you have the APM program you can confirm the setting in memory.			5
5.	Go to page number indicated in Index for CLEANUP AND START-UP INSTRUCTIONS.			INDEX
6.	Is setup switch SW1-1 in the ON position?	7	8	
7.	Put setup switch SW1-1 in the OFF position.			5
8.	Is setup switch SW1-6 in the ON position?	9	10	
9.	Put setup switch SW1-6 in the OFF position.			5
10.	Is this a new service replacement control?	11	13	
11.	You need to remove the model plug PL4 from the old control and install it on the new replacement control. Once you install the model plug the power to the furnace needs to be reset because the model plug is only read on power-up.			12
12.	If the model plug is not available from the old control, reference the model plug chart on the wiring schematic for the correct part number. If absolutely necessary you can install two resistors into the PL4 connection on the control board. R1 goes across the middle 2 pins and R2 goes across the outer 2 pins. Reference the model plug chart on the schematic for the correct resistance values. Resistors can be purchased at a nearby Radio Shack. The resistors need to be within 10% of the stated value. Check with an ohm meter before installing.			5
13.	Is this furnace twinned with another furnace?	14	17	
14.	Is the MAIN furnace flashing the status code?	15	17	
15.	Do the furnaces have the same model number on the rating plate?	18	16	
16.	Replace one of the furnaces because you cannot twin different size furnaces.			5
17.	Replace the variable speed furnace control.			5
18.	One of the model plugs is bad. Ohm out each one and replace the one that does not match the model plug chart on the wiring schematic.			5

STATUS CODE 31

HIGH-HEAT PRESSURE SWITCH OR RELAY DID NOT CLOSE OR REOPENED - This status code can occur under the scenarios shown below. Keep in mind that whenever the variable speed furnace control shuts unit down, gas remains off or shuts off immediately, inducer continues running for 5 seconds, and if the blower is running, it remains running at low heat airflow or reduces to low heat airflow for the selected off-delay. A mis-wired gas valve can cause this problem so make sure the BLUE wire goes to the gas valve M terminal and the GREEN/YELLOW wire goes to the gas valve C terminal. Installations over 5000 ft. require a field-supplied High Altitude high heat pressure switch.

— LOW HEAT

1. PREPURGE OR STEADY-STATE - If the high heat pressure switch input turns ON the variable speed furnace control begins flashing status code 31 and transitions to high heat. After the call for heat is satisfied and the blower off-delay is completed the control will stop displaying status code 31.

— HIGH HEAT

1. PREPURGE - If the high heat pressure switch HPS does not make within 30 seconds after a call for high heat is initiated the variable speed furnace control begins flashing status code 31, and proceeds with the high heat cycle.

NOTE: The gas valve GV will be at low heat rate.

2. LOW HEAT TO HIGH HEAT TRANSITION - If the high heat pressure switch HPS fails to make within 45 seconds after high heat was requested the variable speed furnace control begins flashing status code 31. If the high heat pressure switch HPS fails to make within the next 75 seconds the variable speed furnace control shuts unit down, and continues flashing status code 31. After the blower off-delay is completed the variable speed furnace control will stop displaying status code 31 and if there is a call for heat, begin a new heating cycle. This new heating cycle will be restricted to high heat.
3. STEADY-STATE - If the high heat pressure switch HPS opens and fails to reclose within 45 seconds the variable speed furnace control begins flashing status code 31. If the high heat pressure switch HPS fails to make within the next 75 seconds the variable speed furnace control shuts unit down, and continues flashing status code 31. After the blower off-delay is completed the variable speed furnace control will stop displaying status code 31 and if there is a call for heat, begin a new heating cycle. This new heating cycle will be restricted to high heat.

STEP	ACTION	YES	NO	GO TO
1.	Turn power off, remove blower access panel, and disconnect the User Interface ABCD connector (if used) or the R thermostat lead (if used) from the furnace control board.			2
2.	Turn power on and depress door switch. Use a piece of tape to hold switch closed.			3
3.	Jumper R, W/W1, and W2 thermostat terminals.			4
4.	Wait 1 minute before proceeding to the next step.			5
5.	Does status code 31 flash?	9	6	
6.	Does a different status code flash?	7	34	
7.	Go to page number indicated in the Index for the section covering the status code.			INDEX
8.	Go to page number indicated in Index for CLEANUP AND START-UP INSTRUCTIONS.			INDEX
9.	Is 24-vac across GRAY wire on the high heat pressure switch HPS and COM-24V on variable speed furnace control?	14	10	
10.	Is 24-vac across connector terminal PL1-12 and COM-24V on variable speed furnace control?	11	13	
11.	You have an open wire or bad terminal on the GRAY wire from the variable speed furnace control to the high heat pressure switch HPS. Repair it or replace harness.			8
12.	Repair or replace the main wire harness.			8
13.	Replace the variable speed furnace control.			8
14.	Is 115-vac across connector terminals PL2-2 and NEUTRAL-L2?	15	13	
15.	Is 24-vac across BROWN wire on the high heat pressure switch HPS and COM-24V on variable speed furnace control?	16	18	
16.	Is 24-vac across connector terminal PL1-3 and COM-24V on variable speed furnace control?	13	17	
17.	You have an open wire or bad terminal on the BROWN wire from the high heat pressure switch HPS to the variable speed furnace control. Repair it or replace harness.			8
18.	Turn power off and disconnect jumper wire across R, W/W1, and W2 thermostat terminals.			19
19.	Connect 1 side of slope manometer with a tee to collector box pressure tap. Refer to pressure check diagram in Appendix C.			20
20.	Turn power on and jumper R, W/W1, and W2 thermostat terminals.			21
21.	Do you have enough pressure across heat exchangers to make the high heat pressure switch HPS when status code 31 flashes? Reference high altitude settings if a High Altitude Pressure Switch Kit is installed. (See Table 4.) If this is a high altitude installation and a High Altitude Pressure Switch Kit is not installed replace the high heat pressure switch with a High Altitude Pressure Switch Kit. NOTE: High altitude is over 5,500 ft. for Category I vent.	22	23	
22.	Replace the high heat pressure switch or the pressure switch assembly.			8
23.	Is inducer motor rotating in direction indicated on cooling fan?	25	24	
24.	Replace inducer motor or inducer motor assembly.			8

STEP	ACTION	YES	NO	GO TO
25.	Turn power off.			26
26.	Is inducer wheel okay?	28	27	
27.	If possible, replace inducer wheel. Otherwise, replace inducer motor assembly. NOTE: If the inducer wheel shows signs of excessive deterioration find cause by checking venting, input rates, and temperature rise. If other parts are affected replace them.			8
28.	Is the inducer wheel properly mounted to the inducer motor shaft?	29	30	
29.	Does the furnace have the proper collector box cover plate and inducer motor?	31	30	
30.	Fix problem.			8
31.	You have excessive restriction in vent pipe or excessive leakage before the pressure tap in the collector box. Check for the following: - Restriction in vent pipe. - Proper vent sizing for installation. - Leakage in collector box. - Leakage in heat exchanger. NOTE: If leakage is due to excessive corrosion find cause by checking venting, input rates, and temperature rise. If other parts are affected replace them.			30
32.	Does status code 31 flash?	33	13	
33.	The BROWN wire is shorting to the YELLOW or ORANGE wires that go the low heat pressure switch LPS. Reconnect the GRAY wire to the high heat pressure switch HPS.			12
34.	Continue to observe furnace operation for 20 minutes or until status code starts flashing.			35
35.	Does status code 31 flash?	37	36	
36.	Does a different status code flash?	7	41	
37.	Turn power off and disconnect jumper wire across R, W/W1, and W2 thermostat terminals.			38
38.	Connect 1 side of slope manometer with a tee to collector box pressure tap. Refer to pressure check diagram in Appendix C.			39
39.	Turn power on and jumper R, W/W1, and W2 thermostat terminals.			40
40.	Do you have enough pressure across heat exchangers to prevent the high heat pressure switch HPS from breaking when status code 31 flashes? Reference high altitude settings if a High Altitude Pressure Switch Kit is installed. (See Table 4.) If this is a high altitude installation and a High Altitude Pressure Switch Kit is not installed replace the high heat pressure switch with a High Altitude Pressure Switch Kit. NOTE: High altitude is over 5,500 ft. for Category I vent.	22	23	
41.	Disconnect jumper wire across R, W/W1, and W2 thermostat terminals and wait for the blower off-delay to finish.			42
42.	Reset the power and jumper R and W/W1 thermostat terminals.			43
43.	Does status code 31 flash?	45	44	
44.	Does a different status code flash?	7	8	
45.	Turn power off and disconnect the GRAY wire to the high heat pressure switch HPS.			46
46.	Turn power ON and jumper R and W/W1 thermostat terminals.			32

Table 4 – High Heat Pressure Switch HPS Settings

Model	Factory Settings		High Altitude Settings	
	Make Point	Break Point	Make Point	Break Point
58CVA, 58CVX	0.42 in. w.c.	0.27 +/- 0.05 in. w.c.	0.36 in. w.c.	0.21 +/- 0.05 in. w.c.

STATUS CODE 32

LOW-HEAT PRESSURE SWITCH DID NOT CLOSE OR REOPENED - This status code can occur as a result of the low heat pressure switch LPS not making or the low gas pressure switch LGPS opening. Regardless of which switch is open, the variable speed furnace control will operate under the scenarios shown below. Keep in mind that whenever the variable speed furnace control shuts unit down, gas remains off or shuts off immediately and inducer continues running for 5 seconds. An accessory Low Heat Pressure Switch is not required for high altitude installation.

— LOW HEAT

1. PREPURGE - If the low heat pressure switch LPS does not make within 30 seconds after a call for heat is initiated the variable speed furnace control will display status code 32 until the low heat pressure switch LPS closes. If the low heat pressure switch LPS fails to close within 5 minutes the variable speed furnace control continues flashing status code 32, shuts unit down, and waits 15 minutes before restarting the heating cycle.
2. AFTER IGNITION - If the low heat pressure switch LPS opens after the burners ignite the variable speed furnace control starts flashing status code 32, shuts unit down, turns on the blower, or continues to operate the blower, at low heat airflow for the selected blower off-delay period, stops flashing status code 32, and restarts the heating cycle. If the low heat pressure switch opened within 5 minutes after ignition the new heating cycle will be restricted to high heat, even if low heat only is selected (setup switch SW1-2 is ON).

STEP	ACTION	YES	NO	GO TO
1.	Turn power off, remove blower access panel, and disconnect the User Interface ABCD connector (if used) or the R thermostat lead (if used) from the furnace control board. Note current setting of setup switch SW1-2 and then set it to the ON position.			2
2.	Turn power on and depress door switch. Use a piece of tape to hold switch closed.			3
3.	Jumper R and W/W1 thermostat terminals.			4
4.	Observe operation of the inducer motor for two minutes before proceeding to the next step.			5
5.	Does status code 32 flash?	9	6	
6.	Does a different status code flash?	7	41	
7.	Return setup switch SW1-2 to its original setting and go to page number indicated in the Index for the section covering the status code.			INDEX
8.	Return setup switch SW1-2 to its original setting and go to page number indicated in Index for CLEANUP AND START-UP INSTRUCTIONS.			INDEX
9.	Did the inducer motor turn on at all after jumpering R and W/W1?	15	10	
10.	Is 115-vac across PL11-1 and PL11-3?	11	12	
11.	Replace inducer motor or inducer motor assembly.			8
12.	Is 115-vac across PL2-2 and NEUTRAL-L2?	13	14	
13.	You have an open wire or bad terminal on the BLACK or WHITE wire from the variable speed furnace control to the inducer motor. Repair it or replace harness.			8
14.	Replace the variable speed furnace control.			8
15.	Does the hot surface igniter come ON before the fault occurs?	16	21	
16.	Turn power off and disconnect jumper wire across R and W/W1 thermostat terminals.			17
17.	Turn power on and then run component test by putting setup switch SW1-6 into the ON position.			18
18.	When the blower turns OFF does the inducer motor switch to low speed inducer for 10 seconds?	19	20	
19.	Turn power off and put setup switch SW1-6 into the OFF position.			45
20.	Put setup switch SW1-6 into the OFF position and get your volt meter ready to measure 115-vac voltage across PL11-2 and PL11-3.			57
21.	Is 24-vac across YELLOW wire to the low heat pressure switch LPS and COM-24V on variable speed furnace control?	24	22	
22.	Is 24-vac across connector terminal PL1-2 and COM-24V on variable speed furnace control?	23	14	
23.	You have an open wire or bad terminal on the YELLOW wire from the variable speed furnace control to the low heat pressure switch LPS. Repair it or replace the harness.			8
24.	Is 24-vac across ORANGE wire on the low heat pressure switch LPS and COM-24V on variable speed furnace control?	25	28	
25.	Is 24-vac across connector terminal PL1-4 and COM-24V on variable speed furnace control?	14	26	
26.	Turn power off and disconnect jumper wire across R and W/W1 thermostat terminals.			27

STEP	ACTION	YES	NO	GO TO
27.	You have an open circuit between the low heat pressure switch LPS and the variable speed furnace control. This includes all the ORANGE wire interconnecting the low heat pressure switch LPS to the variable speed furnace control. It also includes the low gas pressure switch LGPS (if used). 1. Check the continuity across the low gas pressure switch LGPS (if used). If there is no continuity check the propane line pressure. If the propane line pressure is correct replace the low gas pressure switch LGPS. 2. Check the continuity of each ORANGE wire interconnecting the low heat pressure switch LPS and the variable speed furnace control. Repair open wire or replace harness.			8
28.	Turn power off and disconnect jumper wire across R and W/W1 thermostat terminals.			29
29.	Connect 1 side of slope manometer with a tee to collector box pressure tap. Refer to pressure check diagram in Appendix C.			30
30.	Turn power on and jumper R and W/W1 thermostat terminals.			31
31.	Do you have enough pressure across heat exchangers to make the low heat pressure switch LPS when status code 32 flashes? Reference pressure switch settings in Table 5.	32	33	
32.	Replace the low heat pressure switch or the pressure switch assembly.			8
33.	Is inducer motor rotating in direction indicated on cooling fan?	34	11	
34.	Turn power off.			35
35.	Is inducer wheel okay?	37	36	
36.	If possible, replace inducer wheel. Otherwise, replace inducer motor assembly. NOTE: If the inducer wheel shows signs of excessive deterioration find cause by checking venting, input rates, and temperature rise. If other parts are affected replace them.			8
37.	Is the inducer wheel properly mounted to the inducer motor shaft?	38	39	
38.	Does the furnace have the proper collector box cover plate and inducer motor?	40	39	
39.	Fix problem.			8
40.	You may have excessive restriction in vent pipe or excessive leakage before the pressure tap in the collector box. Check for the following: - Restriction in vent pipe. - Proper vent sizing for installation. - Leakage in collector box. - Leakage in heat exchanger. NOTE: If leakage is due to excessive corrosion find cause by checking venting, input rates, and temperature rise. If other parts are affected replace them. If there are no signs of restriction or leakage replace the inducer motor. If the problem still persists contact distributor.			39
41.	Continue to observe furnace operation for 20 minutes or until status code starts flashing.			42
42.	Does status code 32 flash?	55	43	
43.	Does a different status code flash?	7	48	
44.	Reconnect PL11 and disconnect jumper wire across R and W/W1 thermostat terminals.			45
45.	Connect 1 side of slope manometer with a tee to collector box pressure tap. Refer to pressure check diagram in Appendix C.			46
46.	Turn power on and jumper R and W/W1 thermostat terminals.			47
47.	Do you have enough pressure across heat exchangers to make the low heat pressure switch LPS when status code 32 flashes? Reference pressure switch settings in Table 5.	32	60	
48.	While the unit is operating in low heat jumper R and W2 thermostat terminals.			49
49.	Continue to observe furnace operation for 20 minutes or until status code starts flashing.			50
50.	Does status code 32 flash?	52	51	
51.	Does a different status code flash?	7	8	

STEP	ACTION	YES	NO	GO TO
52.	Turn power off and disconnect PL11.			53
53.	Do you have continuity across PL11-1 and PL11-3?	54	11	
54.	Check for intermittent connections in the inducer motor power leads at connectors PL2 and PL11.			39
55.	Turn power off and disconnect PL11.			56
56.	Do you have continuity across PL11-2 and PL11-3?	44	11	
57.	Repeat component test. Is there 115-vac across PL11-2 and PL11-3 when the blower turns OFF?	11	58	
58.	Repeat component test. Is 115-vac across PL2-1 and NEUTRAL-L2 when the blower turns OFF?	59	14	
59.	You have an open wire or bad terminal on the RED wire from the variable speed furnace control to the inducer motor. Repair it or replace harness.			8
60.	Do you have low line voltage to the furnace? NOTE: The recommended line voltage should be between 104 and 127 VAC.	61	33	
61.	Contact power utility to correct problem.			8

Table 5 – Low Heat Pressure Switch LPS Settings

Model	Factory Settings All Altitudes	
	Make Point	Break Point
58CVA, 58CVX	0.33 in. w.c.	0.18 +/- 0.05 in. w.c.

STATUS CODE 33

LIMIT CIRCUIT FAULT - This status code indicates the limit, draft safeguard, flame rollout, or blocked vent switch (if used) is open or the furnace is operating in high-heat only mode due to 2 successive low heat limit trips. Blower will run for 4 minutes or until the open switch remakes whichever is longer. If open longer than 3 minutes, code changes to lockout #13. If open less than 3 minutes status code #33 continues to flash until blower shuts off. Flame rollout switch requires manual reset.

STEP	ACTION	YES	NO	GO TO
1.	Turn power off, remove blower access panel, and disconnect the User Interface ABCD connector (if used) or the R thermostat lead (if used) from the furnace control board. Note current setting of setup switch SW1-2 and then set it to the ON position.			2
2.	Turn power on and depress door switch. Use a piece of tape to hold switch closed.			3
3.	Does status code 33 flash?	11	4	
4.	Does a different status code flash?	5	6	
5.	Return setup switch SW1-2 to its original setting and go to page number indicated in the Index for the section covering the status code.			INDEX
6.	Jumper R and W/W1 thermostat terminals.			7
7.	Observe the furnace operation for 25 minutes or until status code starts flashing.			8
8.	Does status code 33 flash?	43	9	
9.	Does a different status code flash?	5	76	
10.	Return setup switch SW1-2 to its original setting and go to page number indicated in Index for CLEANUP AND START-UP INSTRUCTIONS.			INDEX
11.	Is 24-vac across connector terminal PL1-6 and COM-24V on variable speed furnace control?	13	12	
12.	Replace the variable speed furnace control.			10
13.	Is 24-vac across connector terminal PL1-8 and COM-24V on variable speed furnace control?	12	14	
14.	Turn power off.			15
15.	Do you have continuity across limit switch(es) LS?	19	16	
16.	Wait for unit to cool then recheck for continuity across limit switch(es) LS.			17
17.	Do you have continuity across limit switch(es) LS?	19	18	
18.	Replace limit switch.			10
19.	Do you have continuity across the flame rollout switch(es) FRS?	27	20	
20.	Can flame rollout switch(es) FRS be reset?	22	21	
21.	Replace flame rollout switch FRS.			10
22.	Reset flame rollout switch(es) FRS, turn power on, and observe furnace operation for (2) 15 minute cycles.			23

STEP	ACTION	YES	NO	GO TO
23.	Does flame rollout switch(es) FRS trip again?	25	24	
24.	Does a different status code flash?	5	10	
25.	You have inadequate combustion-air supply. This may be caused by: - Poor burner, manifold, or orifice alignment. - Blocked heat exchanger. - Leak in heat exchanger. - Furnace installed in a negative pressure area.			26
26.	Fix problem.			10
27.	Do you have a blocked vent safety switch BVSS?	28	35	
28.	Do you have continuity across the blocked vent safety switch BVSS?	35	29	
29.	Can blocked vent safety switch BVSS be reset?	31	30	
30.	Replace blocked vent safety switch BVSS.			10
31.	Reset blocked vent safety switch BVSS, turn power on, and observe furnace operation for (2) 15 minute cycles.			32
32.	Does the blocked vent safety switch BVSS trip again?	34	33	
33.	Does a different status code flash?	5	10	
34.	You may have excessive restriction in vent pipe. Check for the following: - Restriction in vent pipe. - Proper vent sizing for installation. - Elbow baffle installed. NOTE: If there are no signs of restriction then check for excessive wind. If there was no excessive wind then replace the blocked vent safety switch BVSS.			26
35.	Do you have continuity across draft safeguard switch DSS?	39	36	
36.	Wait for unit to cool then recheck for continuity across draft safeguard switch DSS.			37
37.	Do you have continuity across draft safeguard switch DSS?	39	38	
38.	Replace draft safeguard switch DSS.			10
39.	Turn power on.			40
40.	Does status code 33 flash?	42	41	
41.	Does a different status code flash?	5	6	
42.	You have an open RED wire or bad terminal in limit circuit. Repair wire or replace harness.			10
43.	Connect BLACK voltmeter probe to COM-24V on variable speed furnace control. Using the RED probe check for 24-vac on each terminal of the limit switch(es) LS. Do you have 24-vac on each terminal of limit switch LS?	49	44	
44.	Does furnace have the proper limit switch(es), rear baffle, and blower shelf baffle? If so, are the heat exchangers properly aligned?	45	26	
45.	Remove tape from door switch, turn power off at main disconnect, and remove jumper across R and W/W1.			46
46.	Is the blower wheel firmly mounted on motor shaft?	47	26	
47.	Does the model plug PL4 match the part number specified on the Model Plug Chart in the upper left hand corner of wiring schematic?	51	48	
48.	Replace model plug.			10
49.	Does the furnace have the proper draft safeguard switch?	50	26	
50.	You may have excessive restriction in vent pipe. Check for the following: - Restriction in vent pipe. - Proper vent sizing for installation. - Elbow baffle installed. NOTE: If there are no signs of restriction then check for excessive wind. If there was no excessive wind then replace the draft safeguard switch.			26
51.	Turn power on and depress door switch. Use a piece of tape to hold switch closed.			52
52.	Jumper R and W/W1 thermostat terminals.			53
53.	Does status code 33 occur during low fire?	54	75	
54.	Clean or replace filter if necessary, then recycle furnace after limit resets.			55
55.	Observe furnace operation for 25 minutes or until status code 33 starts flashing.			56
56.	Does status code 33 occur?	57	10	

STEP	ACTION	YES	NO	GO TO
57.	Is furnace considerably overfired (10% or more)? Clock input rate. Do not use manifold pressure method unless using propane.	58	59	
58.	Ensure gas inlet pressure and burner orifices (natural or propane) are correct. Then adjust gas valve to proper rate per Installation, Start-Up, and Operating Instructions. If it cannot be adjusted to proper rate, replace gas valve.			10
59.	Is temperature rise within rise range?	72	60	
60.	Does the installation have a bypass humidifier or zoning system bypass?	61	64	
61.	With blower access panel in place record temperature rise across return air duct before and after the bypass.			62
62.	Is temperature rise from bypass greater than 15 deg. F?	63	64	
63.	The bypass is oversized. Adjust damper or replace with properly sized bypass.			10
64.	Does installation have modulating zone dampers?	65	69	
65.	Disable modulating zone damper system with all dampers in open position except bypass damper. If installation is equipped with a bypass damper, it should be in the closed position.			66
66.	Turn power off and disconnect jumper from the R thermostat terminal. Turn power back on and reconnect jumper to R thermostat terminal. Observe for 15 minutes with the blower access panel in place.			67
67.	Does status code 33 flash?	69	68	
68.	The problem is caused by the modulating zone damper system. Check the zoning system manufacturer's Installation and Troubleshooting guide for corrective action.			10
69.	Turn power off and install a temperature probe in front of limit switch button. If this furnace has 2 main limits check each one.			70
70.	Turn power on and cycle unit. Does limit switch open at a temperature at least 10 deg. F below temperature setpoint for limit switch? (EXAMPLE: The setpoint is 220 deg F, but the switch opens at a temperature below 210 deg F.)	18	71	
71.	Adjust the blower airflow using dip switch SW1-3 and SW1-4 to get the temperature rise within the rise range.			26
72.	Turn power off and install a temperature probe in front of limit switch button. If this furnace has 2 main limits check each one.			73
73.	Turn power on and cycle unit. Does limit switch open at a temperature at least 10 deg. F below temperature setpoint for limit switch? (EXAMPLE: The setpoint is 220 deg F, but the switch opens at a temperature below 210 deg F.)	18	74	
74.	The problem may be related to poor air distribution or excessive pressure drop across filter. Check filter and return-air grilles for blockage. Add turning vanes, more supply openings, or more return-air openings. Use Appendix D to evaluate external static pressure.			26
75.	While the unit is operating in low heat jumper R and W2.			54
76.	While the unit is operating in low heat jumper R and W2.			77
77.	Observe furnace operation for another 10 minutes or until status code 33 starts flashing.			78
78.	Does status code 33 flash?	57	79	
79.	Does a different status code flash?	5	80	
80.	Is the furnace in the downflow or horizontal position?	81	10	
81.	Disconnect the R thermostat lead, wait for blower to stop, and continue to observe furnace for 5 minutes.			82
82.	Does fault occur after blower stops?	83	10	
83.	Increase the blower off-delay time to 180 seconds by putting both setup switches SW1-7 and SW1-8 into the ON position.			26

STATUS CODE 34

IGNITION-PROVING FAULT - This status code indicates flame was not sensed during trial for ignition period. The control will repeat ignition sequence 3 more times before going to status code 14 - IGNITION LOCKOUT. This status code can also indicate flame signal was lost during steady-state operation.

STEP	ACTION	YES	NO	GO TO
1.	Shut the power off, remove the blower access panel and disconnect the User Interface ABCD connector (if used) or the R thermostat lead (if used) from the furnace control board.			2
2.	Turn the power on and depress the door switch. Use a piece of tape to hold it closed.			3
3.	Jumper the R and W/W1 thermostat terminals.			4
4.	Observe the operation of the furnace through a heating cycle.			5
5.	Does status code 34 flash?	9	6	
6.	Does a different status code flash?	7	8	
7.	Go to page number indicated in the Index for the section covering the status code.			INDEX
8.	Go to page number indicated in Index for CLEANUP AND START-UP INSTRUCTIONS.			INDEX
9.	Turn off the power and disconnect the jumper across the R and W/W1 thermostat terminals.			10
10.	Turn the power on.			11
11.	Check the hot surface igniter. To do this run a COMPONENT TEST by putting setup switch SW1-6 in the ON position. Does the igniter glow orange/white hot by the end of the 15 second warm-up period?	16	12	
12.	Hook an AC voltmeter across PL2-3 and NEUTRAL-L2 on the variable speed furnace control. Repeat the COMPONENT TEST by turning setup switch SW1-6 OFF and then back ON. Is 115-vac across PL2-3 and NEUTRAL-L2 during the 15 second warm-up period?	14	13	
13.	Replace the variable speed furnace control.			8
14.	Check continuity in harness and igniter. Replace failed component.			15
15.	Fix problem.			8
16.	Jumper the R and W/W1 thermostat terminals.			17
17.	Is 24-vac across BLUE and GREEN/YELLOW wire to gas valve GV?	21	18	
18.	Turn off the power.			19
19.	Do you have continuity across the following connections? - PL1-10 and the BLUE wire at the gas valve GV. - PL1-5 and the GREEN/YELLOW wire at the gas valve GV.	13	20	
20.	The BLUE or GREEN/YELLOW wire from the variable speed furnace control to the gas valve GV is not making a good connection. Repair the wire(s) or replace the harness.			8
21.	Does the gas valve open and allow gas to flow?	24	22	
22.	Are all the manual gas cocks and the gas valve switch in the ON position?	23	15	
23.	Replace gas valve.			8
24.	Do the main burners ignite?	26	40	
25.	Check for the following: - Inadequate flame carryover on rough ignition. - Low inlet gas pressure.			15
26.	Do the main burners stay on longer than a few seconds?	36	40	
27.	Turn off the power and disconnect the jumpers across the R, W/W1, and W2 thermostat terminals.			28
28.	Connect a DC microampmeter in series with the flame sensor wire.			29
29.	Turn power on and jumper R, W/W1, and W2 thermostat terminals.			30
30.	Is the DC current below .5 microamps?	32	31	

STEP	ACTION	YES	NO	GO TO
31.	Check connections and retry. If current is near typical value (4.0 to 6.0 microamps) and main burners will not stay on longer than a few seconds, check the following: - Inadequate flame carryover on rough ignition. - Low inlet gas pressure. - Low manifold pressure. Reference installation instructions for proper manifold pressure. - Slow opening gas valve. Gas should flow at full pressure within 4 seconds after the gas valve is energized. If the above items are OK replace the variable speed furnace control.			8
32.	Clean flame sensor with fine sandpaper and make sure it is properly positioned then recheck current. Current is typically 4.0 to 6.0 microamps.			33
33.	Is current near typical value?	35	34	
34.	Replace electrode.			8
35.	Will main burners ignite and stay on?	8	13	
36.	Do you have burner pulsation's?	37	38	
37.	Check the following: - Inadequate flame carryover. - Low inlet gas pressure. - Proper vent sizing for installation. - Poor gas valve regulation. - Leakage in, or around heat exchanger. - Leakage in collector box. - Leakage between inducer and collector box.			8
38.	While the unit is operating in low heat jumper R and W2.			39
39.	Do you have burner pulsation's in high heat?	37	8	
40.	Turn off the power and disconnect the jumper across the R and W/W1 thermostat terminals.			41
41.	Turn power on and jumper R, W/W1, and W2 thermostat terminals.			42
42.	Do the main burners ignite?	43	25	
43.	Do the main burners stay on longer than a few seconds?	44	27	
44.	Do you have burner pulsation's?	37	45	
45.	Disconnect jumper from R and W2.			46
46.	Do the main burners remain ON?	47	48	
47.	Furnace will operate at low-heat but will not ignite on low-heat. Check the following: - Inadequate flame carryover. - Low manifold pressure. Reference installation instructions for proper low-heat manifold pressure. - Slow opening gas valve. Gas should flow at full pressure within 4 seconds after the gas valve is energized. - Flame sensor location.			8
48.	Furnace will not operate or ignite on low-heat. Check the following: - Flame sensor location. - Very low manifold pressure. Reference installation instructions for proper low-heat manifold pressure. Turn low-heat regulator adjustment clockwise 1/4 turn. Repeat until furnace will operate in low-heat. Then set to the proper manifold pressure. Re-orifice if necessary.			8

STATUS CODE 41

BLOWER MOTOR FAULT - This status code indicates the blower failed to reach 250 RPM or the blower failed to communicate to the variable speed furnace control within 30 seconds after being turned ON or within 10 seconds during steady-state operation.

STEP	ACTION	YES	NO	GO TO
1.	Shut the power off, remove the blower access panel and disconnect the User Interface ABCD connector (if used) or the R thermostat lead (if used) from the furnace control board.			2
2.	Turn the power on and depress the door switch. Use a piece of tape to hold it closed.			3
3.	Jumper the R and W/W1 thermostat terminals.			4
4.	Observe the operation of the furnace for the next 5 minutes or until fault occurs.			5
5.	Does status code 41 flash?	9	6	
6.	Does a different status code flash?	7	8	
7.	Go to page number indicated in the Index for the section covering the status code.			INDEX
8.	Go to page number Indicated in Index for CLEANUP AND START-UP INSTRUCTIONS.			INDEX
9.	Did the blower motor turn ON and come up to speed before status code flashes?	35	10	
10.	Remove tape from door switch and turn power off at main disconnect.			11
11.	Does the blower wheel rub against blower housing?	12	13	
12.	Fix the problem.			8
13.	Does the blower wheel turn freely?	14	15	
14.	Is blower wheel firmly mounted on motor shaft?	16	12	
15.	Replace the entire blower motor or blower control module attached to the blower motor. If you replace the blower control module go to step 36. Always inspect failed motor for water damage. If present, find source of water and fix it. Check A-coil and/or humidifier.			12
16.	Disconnect jumper wire across R and W/W1 thermostat terminals.			17
17.	Are all pins and wire leads intact on connectors between the variable speed furnace control and the blower motor.	18	12	
18.	Turn the power on and depress the door switch. Use a piece of tape to hold it closed.			19
19.	Do you have 115-vac across the BLACK blower motor wire connected to L1 and the WHITE blower motor wire connected to NEUTRAL-L2?	21	20	
20.	Replace the variable speed furnace control.			8
21.	Do you have 115-vac across the BLACK and WHITE power leads at the blower motor?	23	22	
22.	You have an open wire or bad terminal on either the BLACK or WHITE wire between the variable speed furnace control and the blower motor. If you have a power choke disconnect it and check for continuity.			12
23.	Check the blower 12-vdc supply. To do this connect a DC voltmeter across terminals PL3-1 RED (+) and PL3-2 GREEN (-). Is there 12-vdc across the RED and GREEN blower wires?	24	20	
24.	Connect a DC voltmeter across the RED (+) and GREEN (-) wires at connector PL13. Is there 12-vdc across the RED and GREEN blower wires?	26	25	
25.	You have an open wire or bad terminal on either the RED or GREEN wire between connectors PL3 and PL13. Repair it or replace harness.			8
26.	Check the blower motor serial input signal. To do this disconnect PL3 from the furnace control and connect a DC voltmeter across terminals PL3-3 (+) and PL3-2 (-) on the variable speed furnace control. Is there 5-vdc across PL3-3 and PL3-2? NOTE: The voltage should be very stable and should not fluctuate more than .02-vdc. If the voltage fluctuates get a different volt meter before going on to the following steps. NOTE: Since the variable speed furnace control and the blower motor are continuously communicating you do not actually need to run the blower motor to troubleshoot the PL3 connection.	27	20	

STEP	ACTION	YES	NO	GO TO
27.	Reconnect PL3 to the variable speed furnace control and connect a DC voltmeter across terminals PL3-3 YELLOW (+) and PL3-2 GREEN (-). Does the voltage appear to fluctuate more than it did in step 26? NOTE: Typical voltmeters will show a fluctuation of .2-vdc to 1-vdc. The amount of fluctuation is not important and you could see even more fluctuation depending on the voltmeter you use.	20	28	
28.	Check the blower motor serial output signal. To do this disconnect PL3 from the furnace control and connect a DC voltmeter across terminals PL3-4 (+) and PL3-2 (-) on the variable speed furnace control. The voltage should be near 0-vdc but it will fluctuate briefly several times a second. If you have an analog voltmeter the needle will briefly go high several times a second. If you have a digital voltmeter with a bar graph it will show a large change in magnitude on the bar graph several times a second. If you have a plain digital voltmeter it will show a brief fluctuation in voltage and the magnitude may vary depending on the volt meter used. NOTE: Some voltmeters will not sense this fluctuation at all. Test your voltmeter on a known good furnace prior to servicing this product. NOTE: You can also make a simple blinky light with a 1 KΩ resistor and an LED (RED works best). These parts can be purchased at a nearby Radio Shack. The schematic is shown below: PL3-4 1KΩ PL3-2 When using the blinky light the LED will flash briefly several times a second when the blower motor serial output signal is working properly. LED's are directional and the lead closest to the flat side goes to PL3-2.			29
29.	Does the voltage fluctuate as described in step 28?	30	20	
30.	Reconnect PL3 to the variable speed furnace control and connect a DC voltmeter across terminals PL3-4 BLUE (+) and PL3-2 GREEN (-). Does the voltage fluctuate as described in step 28?	31	33	
31.	Disconnect PL13 from the blower motor and connect a DC voltmeter across terminals PL13-3 BLUE (+) and PL13-4 GREEN (-). Does the voltage fluctuate as described in step 28?	15	32	
32.	You have an open wire or bad terminal on the BLUE wire between connectors PL3 and PL13. Repair it or replace harness.			8
33.	Disconnect PL13 from the blower motor and connect a DC voltmeter across terminals PL13-3 BLUE (+) and PL13-4 GREEN (-). Does the voltage fluctuate as described in step 28?	15	34	
34.	You have short to ground on the BLUE wire between connectors PL3 and PL13. Repair it or replace harness.			8
35.	The blower motor and furnace control are communicating but the RPM must be below 250.			14

⚠ WARNING

ELECTRICAL OPERATION HAZARD

Failure to follow this warning could result in personal injury or death.

Wait at least 5 minutes after disconnecting line voltage from equipment before opening blower motor to prevent electrical shock, which can cause personal injury or death.

STEP	ACTION	YES	NO	GO TO
36.	Remove tape from door switch and turn power off at main disconnect.			37
37.	Disconnect both multi-pin connectors from blower control module attached to the blower motor. Be sure to depress release latches on connectors or they may get damaged.			38
38.	Remove control box assembly from blower shelf and position out of the way.			39
39.	Remove blower assembly from furnace.			40
40.	Remove two Phillips head or two ¼-in. hex head bolts from blower control module attached to blower motor.			41
41.	Carefully lift blower control module off blower motor. Depress latch on internal connector to disconnect blower control module from motor portion of blower motor. DO NOT PULL ON WIRES. GRIP PLUG ONLY.			42
42.	When blower control module is completely detached from blower motor, verify with standard ohmmeter that the resistance from each motor lead in motor plug to unpainted motor end plate is greater than 100k ohms. Then verify motor windings are not shorted or open by measuring resistance between each combination of pins in motor plug (there are three different combinations, pin 1-2, pin 2-3, and pin 1-3). Resistance should be approximately equal across each combination of pins.			43
43.	Did the motor pass the resistance check?	44	46	
44.	Does blower wheel turn freely with blower control module removed?	45	46	
45.	Replace blower control module. Inspect failed blower control module for water damage. If present, find source of water and fix. Check AC coil and/or humidifier.			8
46.	Replace entire blower motor including blower control module. Inspect blower control module for water damage. If present, find source of water and fix. Check AC coil and/or humidifier.			8

STATUS CODE 43

LOW-HEAT PRESSURE SWITCH OPEN WHILE HIGH-HEAT PRESSURE SWITCH IS CLOSED - This status code can occur as a result of the low heat pressure switch LPS not making during a call for high heat. Keep in mind that whenever the variable speed furnace control shuts unit down, gas remains off or shuts off immediately and if the inducer is running it continues running for 5 seconds.

— LOW HEAT

1. PREPURGE - If the low heat pressure switch LPS does not make within 30 seconds after a call for heat is initiated the variable speed furnace control will continue running the inducer motor at high heat speed. If the high heat pressure switch HPS makes and the low heat pressure switch LPS is still open the variable speed furnace control starts flashing status code 43. If the low heat pressure switch LPS closes the variable speed furnace control stops flashing status code 43, and continues the heating cycle. If the low heat pressure switch LPS fails to close within 5 minutes the variable speed furnace control continues flashing status code 43, shuts unit down, and waits 15 minutes before restarting the heating cycle.

— HIGH HEAT

1. PREPURGE - If the high heat pressure switch HPS makes and the low heat pressure switch LPS is still open the variable speed furnace control starts flashing status code 43. If the low heat pressure switch LPS closes the variable speed furnace control stops flashing status code 43 and continues the heating cycle. If the low heat pressure switch LPS fails to close within 5 minutes the variable speed furnace control continues flashing status code 43, shuts unit down, and waits 15 minutes before restarting the heating cycle.

STEP	ACTION	YES	NO	GO TO
1.	Turn power off, remove the blower access panel and disconnect the User Interface ABCD connector (if used) or the R thermostat lead (if used) from the furnace control board.			2
2.	Turn the power on and depress the door switch. Use a piece of tape to hold switch closed.			3
3.	Jumper the R, W/W1, and W2 thermostat terminals.			4
4.	Observe the operation of the furnace until ignition.			5
5.	Does status code 43 flash?	9	6	
6.	Does a different status code flash?	7	8	
7.	Go to page number indicated in the Index for the section covering the status code.			INDEX
8.	Go to page number Indicated in Index for CLEANUP AND START-UP INSTRUCTIONS.			INDEX
9.	Are the pressure switches wired correctly?	11	10	
10.	Fix problem.			8
11.	Is 24-vac across YELLOW wire to the low heat pressure switch LPS and COM-24V on variable speed furnace control?	14	12	
12.	Is 24-vac across connector terminal PL1-2 and COM-24V on variable speed furnace control?	13	18	

STEP	ACTION	YES	NO	GO TO
13.	You have an open wire or bad terminal on the YELLOW wire from the variable speed furnace control to the low heat pressure switch LPS. Repair it or replace the harness.			8
14.	Is 24-vac across ORANGE wire on the low heat pressure switch LPS and COM-24V on variable speed furnace control?	15	19	
15.	Is 24-vac across connector terminal PL1-4 and COM-24V on variable speed furnace control?	18	16	
16.	Turn power off and disconnect jumper wire across R and W/W1 thermostat terminals.			17
17.	You have an open circuit between the low heat pressure switch LPS and the variable speed furnace control. This includes all the ORANGE wire interconnecting the low heat pressure switch LPS to the variable speed furnace control. It also includes the low gas pressure switch LGPS (if used). 1. Check the continuity across the low gas pressure switch LGPS (if used). If there is no continuity check the propane line pressure. If the propane line pressure is correct replace the low gas pressure switch LGPS. 2. Check the continuity of each ORANGE wire interconnecting the low heat pressure switch LPS and the variable speed furnace control. Repair open wire or replace harness.			8
18.	Replace the variable speed furnace control.			8
19.	Replace the low heat pressure switch or the pressure switch assembly.			8

STATUS CODE 45

CONTROL CIRCUITRY LOCKOUT - This status code indicates the variable speed furnace control detected one of the following:

1. 1. Flame sense circuitry failure.
2. 2. Software check error.
3. 3. Gas valve relay stuck open.

Auto-reset after 1 hour. Replace variable speed furnace control if status code repeats.

CLEANUP AND START-UP INSTRUCTIONS

1. Start furnace using procedure outlined on Lighting Instructions attached to furnace. Observe operation of furnace through at least 1 complete heating cycle controlled from the room thermostat. Observe cycle for 20 minutes or until a status code is flashed. If status code flashes, refer to the Index.
2. Recycle as necessary and check thermostat heat anticipator setting, gas input rates, and temperature rises. These procedures are outlined in Installation, Start-Up, and Operating Instructions.
3. Check operation of safety devices: draft safeguard switch, limit switch(es), and flame rollout switch(es).
4. Put all setup switches in their proper positions.
5. Remove tape from the door switch.
6. Replace thermostat leads (if used or User Interface ABCD connector (if used).
7. Set thermostat in AUTO position, calling for heat.
8. Set thermostat to desired temperature.
9. Replace the blower access panel and furnace door. Clean up.

APPENDIX A
Board Layout and Wiring Schematic

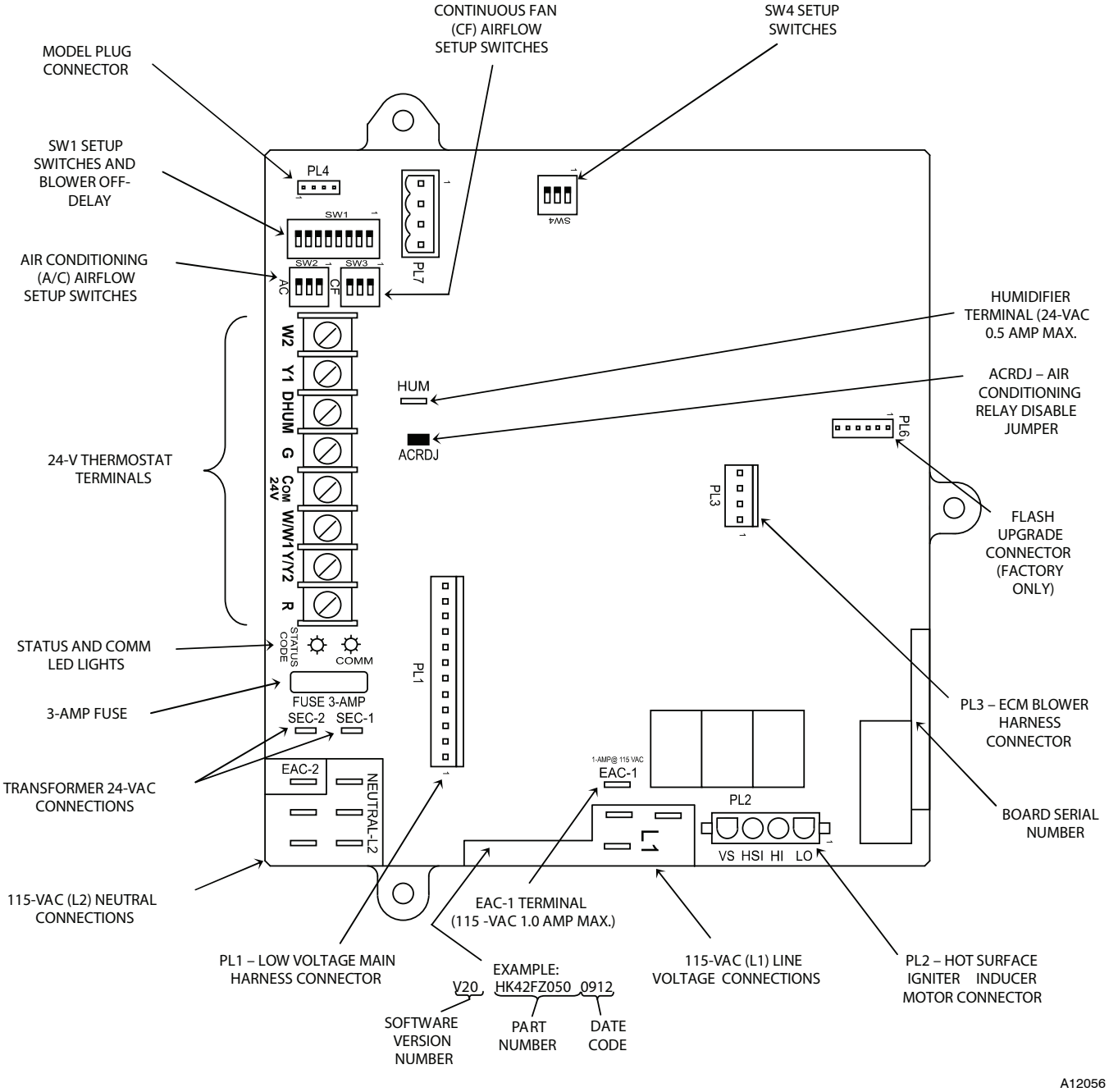

Fig. 1 - Variable-Speed Furnace Control

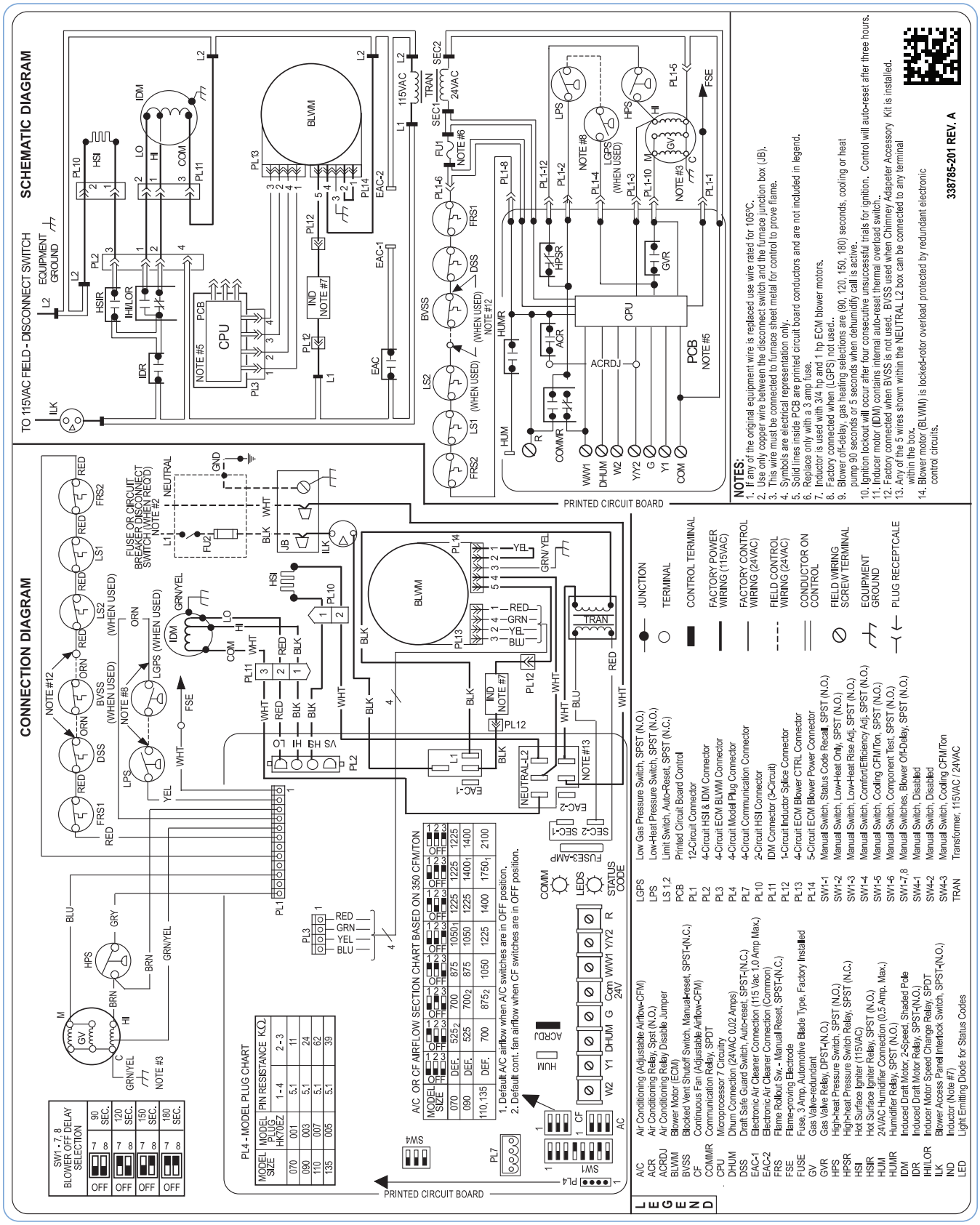

Fig. 2 - Wiring Schematic

APPENDIX B
ECM Blower Motor Description and Operation

The Electronically Commutated Motor (ECM) shown in figure 3 is different than previous generations of variable speed blower motors. This motor has all of the capabilities of previous ECM blower motors but it does not have to be pre-programmed at the factory. Instead the variable speed furnace control programs the ECM blower motor upon application of power to the ECM blower motor via the serial communication link between the variable speed furnace control and the ECM blower motor. This eliminates the need for a multitude of different ECM blower motors where each one is programmed for one specific furnace model. The ECM blower motor is energized with 115-vac whenever power is available at the variable speed furnace control, but operates only when the variable speed furnace control communicates the proper serial commands to the ECM blower motor at PL13

The ECM blower motor is first fed 115-vac power through the 5-pin connector PL14. The 115-vac power is then rectified to DC by a diode module. After rectification, the DC signal is electronically commutated and fed in sequential order to 3 stator windings. The frequency of commutation pulses determines motor speed.

Setting up the desired airflow CFM for an ECM blower motor is done by setting the A/C or CF selections on the variable speed furnace control shown in figure 1. The ECM blower motor then delivers requested airflow CFM as defined by serial commands received from the variable speed furnace control.

The ECM blower motor is configured via the variable speed furnace control to react to changes in system static pressures to maintain constant airflow CFM. The ECM blower motor delivers requested airflow CFM up to about 1.0 in.w.c. of static pressure for most airflow settings. The variable speed furnace control is pre-programmed and contains all the information relative to each furnace model for all modes of operation. Blower characteristics for each model (airflow CFM, torque, and speed versus static pressure) are known from laboratory testing. If any 3 characteristics are known, the fourth can be defined. The airflow CFM is known because of the A/C and CF selections, model plug, and the thermostat input signals on the variable speed furnace control. The variable speed furnace control then communicates the airflow CFM to the ECM blower motor. Torque is known by the ECM blower motor because it is directly related to armature current which is measured by the ECM blower motor control. Speed is measured from the generated back EMF by the ECM motor control. This information (airflow CFM, torque and speed) are entered into an expression which calculates torque from speed and airflow CFM numbers. If the calculation does not match stored blower characteristics, torque is adjusted every 0.8 seconds until agreement is reached. The ECM blower motor does not directly measure static pressure, but does react to changes in static pressure to maintain constant airflow CFM.

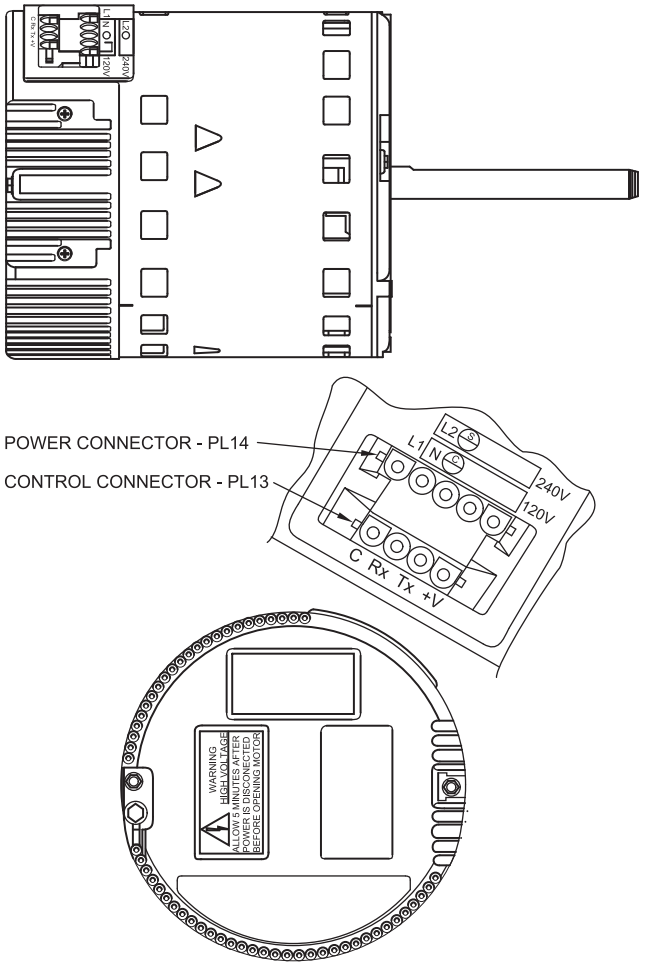

A12231

Fig. 3 - ECM Blower Motor

APPENDIX C
Pressure Check Diagram

Low Heat Pressure Switch LPS Settings

Model	Factory Settings All Altitudes	
	Make Point	Break Point
58CVA, 58CVX	0.33 in. w.c.	0.18 +/- 0.05 in. w.c.

High Heat Pressure Switch HPS Settings

Model	Factory Settings		High Altitude Settings	
	Make Point	Break Point	Make Point	Break Point
58CVA, 58CVX	0.42 in. w.c.	0.27 +/- 0.05 in. w.c.	0.36 in. w.c.	0.21 +/- 0.05 in. w.c.

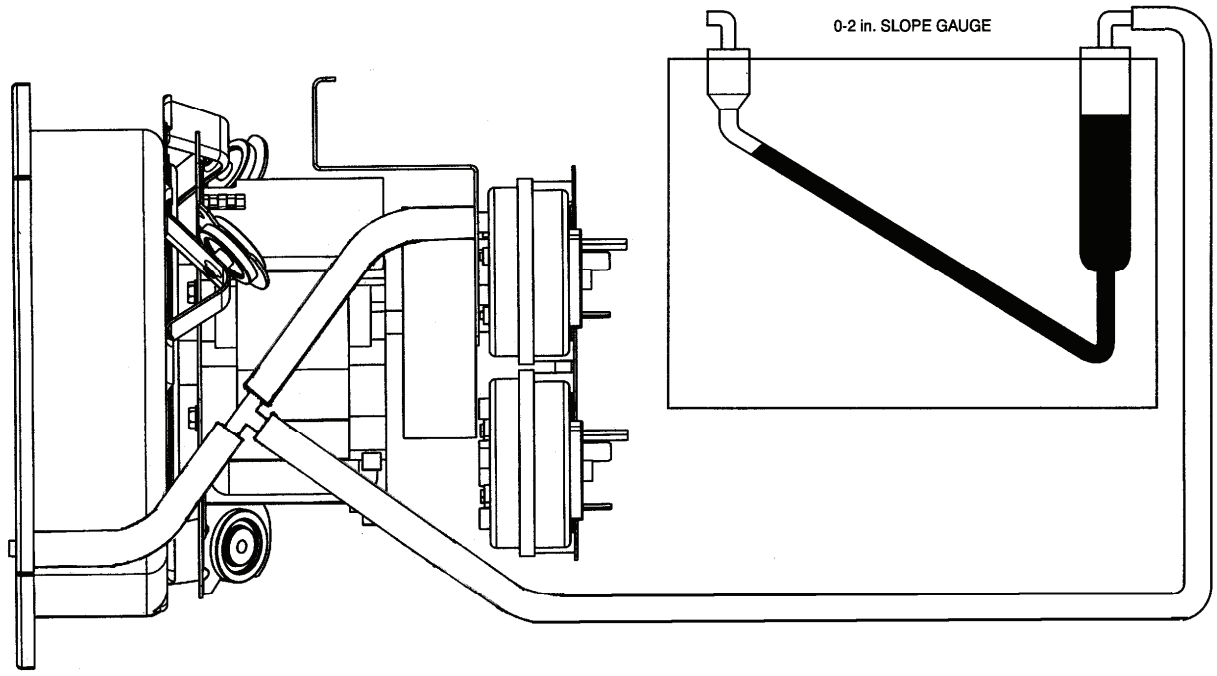

A12232

Fig. 4 - Pressure Check Diagram

APPENDIX D
Static Pressure Reading Location Diagrams

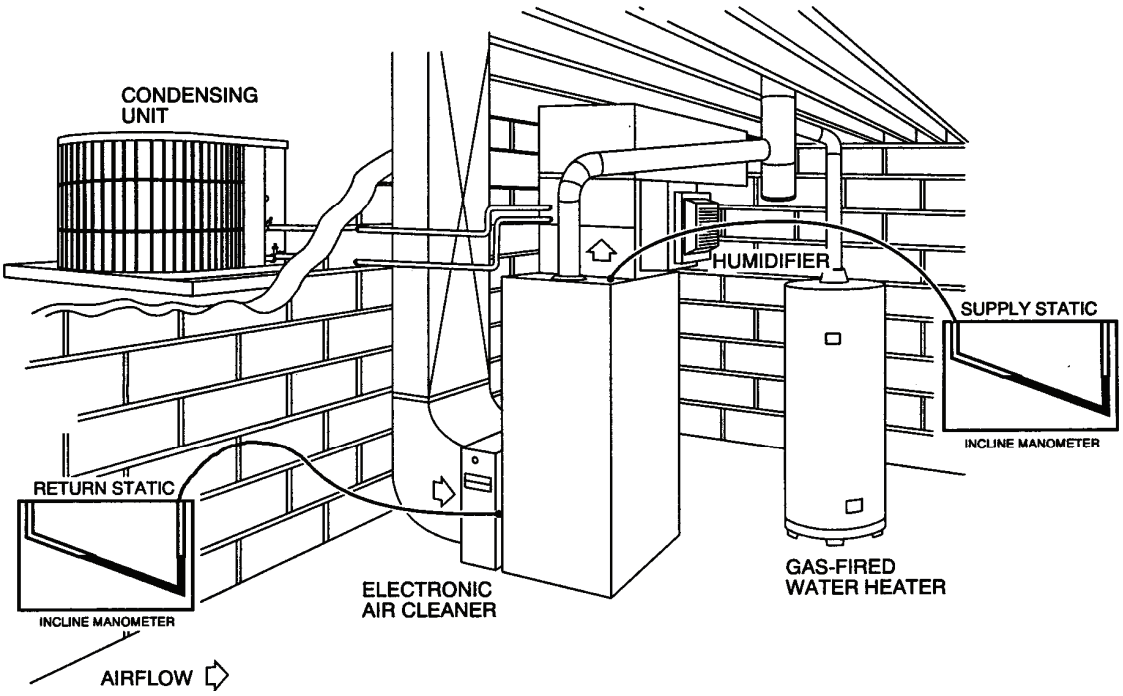

A12233

Fig. 5 - Upflow Total Static Pressure Reading Locations

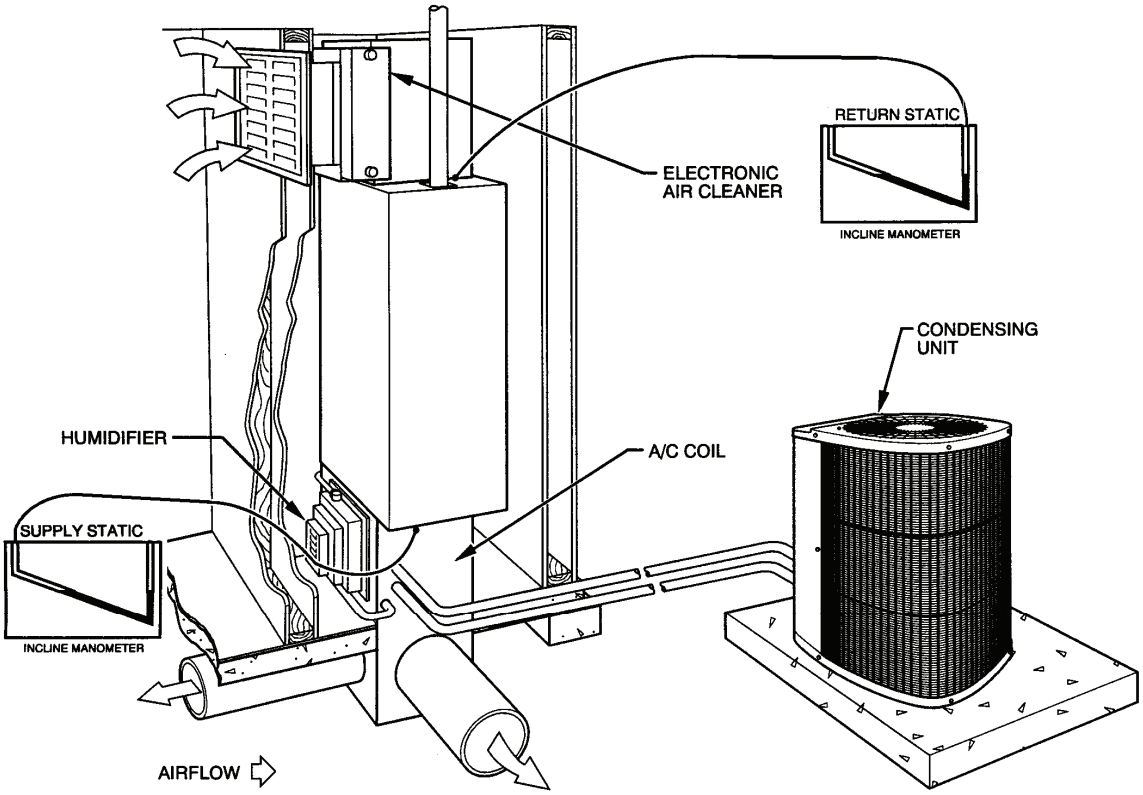

A12234

Fig. 6 - Downflow Total Static Pressure Reading Locations

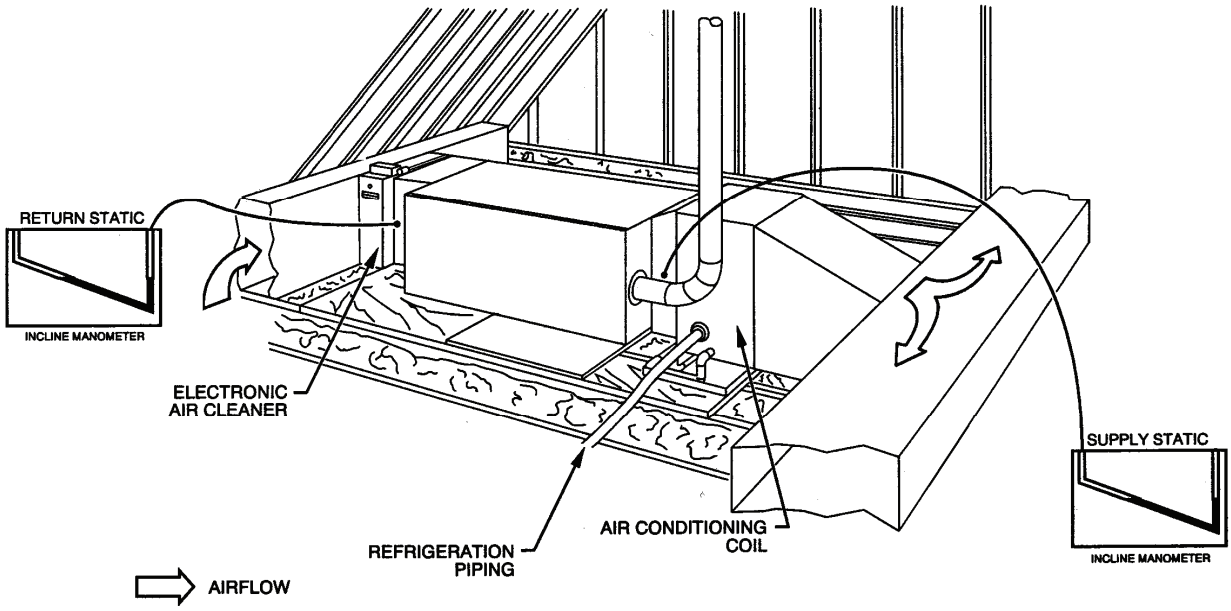

A12235

Fig. 7 - Horizontal Right Total Static Pressure Reading Locations

Tools Needed:
1.Pilot Tube
2.Incline Manometer/Magnahelic

EXAMPLE 1:

Return ESP after Filter	0.20 in.w.c.
Supply ESP before Coil	0.40 in.w.c.
Total ESP	0.60 in.w.c.

EXAMPLE 2:

Return ESP before Filter	0.10 in.w.c.
Filter Static Pressure Drop @ 2000 cfm	0.10 in.w.c.
Supply ESP after Coil	0.20 in.w.c.
Coil Static Pressure Drop Wet	0.20 in.w.c.
Total ESP	0.60 in.w.c.

Both Examples 1 and 2 are correct. Example 1 ESP readings were taken as laid out in static pressure reading location diagrams (Figures 5 - 7). Example 2 readings are taken as described. The coil and filter static pressure drops were taken from the manufacturer's product data sheets with the assumption that 2000 cfm is being delivered.

APPENDIX E

Quick Reference Information

Low Heat Pressure Switch LPS Settings

Model	Factory Settings	
	Make Point	Break Point
58CVA, 58CVX	0.33 in. w.c.	0.18 +/- 0.05 in. w.c.

High Heat Pressure Switch LPS Settings

Model	Factory Settings		High Altitude Settings	
	Make Point	Break Point	Make Point	Break Point
58CVA, 58CVX	0.42 in. w.c.	0.27 +/- 0.05 in. w.c.	0.36 in. w.c.	0.21 +/- 0.05 in. w.c.

Flame Sensor Microamperage:

Microamp Range: 0.5 to 6.0 microamps
Typical Reading: 4 to 6 microamps

Hot Surface Igniter Reading:

Ohm reading of HSI new cold: 40 to 70 ohms (Resistance will be stable throughout the HSI life.)

Gas Valve Ohm Readings:

M to C: (bridge rectifier, use diode test function setting on meter)
Hi to C: (bridge rectifier, use diode test function setting on meter)

Power Choke (Inductor):

Run unit in cooling mode, measure motor amp draw before power choke. Then rerun unit in cooling mode, but this time measure amp draw without power choke in line. The amp draw should be higher without power choke. Some ammeters will register a lower amp draw (look for a change in amperage).

Draft Safeguard Switch: HH18HA493 (Auto Reset) Break Point 200 Deg. F +/- 10

Flame Rollout Switch: HH18HA495 (Manual Reset) Break Point 350 Deg. F +/- 8

APPENDIX F
Furnace Staging Algorithm

On initial thermostat call for heat after power-up, furnace staging algorithm will provide 16 minutes of low heat provided setup switch SW1-2 is off. If call for heat still exists after operating for 16 minutes in low heat, furnace switches to high heat until the thermostat is satisfied.

During subsequent calls for heat:

— Low heat run time is calculated based on previous heating cycle.

— High heat run time is not calculated. High heat is energized in 1 of 3 ways and runs until the thermostat is satisfied:

1. After low heat has run for 16 minutes and call for heat is still present.
2. When the furnace staging algorithm (using previous cycle information) determines high heat is necessary for the entire thermostat cycle.
3. After the calculated low heat on time has elapsed and the call for heat is still present.

— The following flow chart shows how the furnace staging algorithm calculates low heat on times. To predict low heat operation, the times in Low Heat (LH) and High Heat (HH) on the previous cycle must be known. The furnace staging algorithm uses these values to determine how much low heat operation will occur on the next call for heat.

— Four examples are shown below to illustrate what the furnace will do on a cold start, coming out of night setback, coming on in low heat, and coming on in high heat.

```
EXAMPLE 1:
Furnace ran for 16 minutes in low heat and 5 minutes in high heat during previous call for heat.
LH = 16
HH = 5
Calculate: (228 x 16) + (350 x 5) = 5398
3648 < 5398 < 5600 ⇒ Calculate low heat run time for next cycle.
LH_run time = (5600 - 5398) / 122 = 1.6 ⇒ Next cycle, furnace will run for 2 minutes in low heat
                                          and then switch to high heat, if call for heat is still
                                          present.
```

```
EXAMPLE 2:
Furnace ran for 16 minutes in low heat and 10 minutes in high heat during previous call for
heat.
LH = 16
HH = 10
Calculate: (228 x 16) + (350 x 10) = 7148
7148 > 5600 ⇒ Next cycle furnace will only run in high heat, low heat run time is 0 min.
```

```
EXAMPLE 3:
Furnace ran for 13 minutes in low heat and 5 minutes in high heat during previous call for heat.
This can happen if the furnace staging algorithm calculated 13 minutes based on previous call
for heat.
LH = 13
HH = 5
Calculate: (228 x 13) + (350 x 5) = 4714
3648 < 4714 < 5600 ⇒ Calculate low heat run time for next cycle.
LH_run time = (5600 - 4714) / 122 = 7.26 ⇒ Next cycle, furnace will run for 7 minutes in low heat
                                           and then switch to high heat, if call for heat is still
                                           present.
```

```
EXAMPLE 4:
Furnace ran for 0 minutes in low heat and 10 minutes in high heat during previous call for heat.
LH = 0
HH = 10
Calculate: (228 x 0) + (350 x 10) = 3500
3500 < 3648 ⇒ Next cycle furnace will only run in low heat for 16 minutes maximum, then switch
              to high heat, if call for heat is still present.
```

Furnace Staging Algorithm

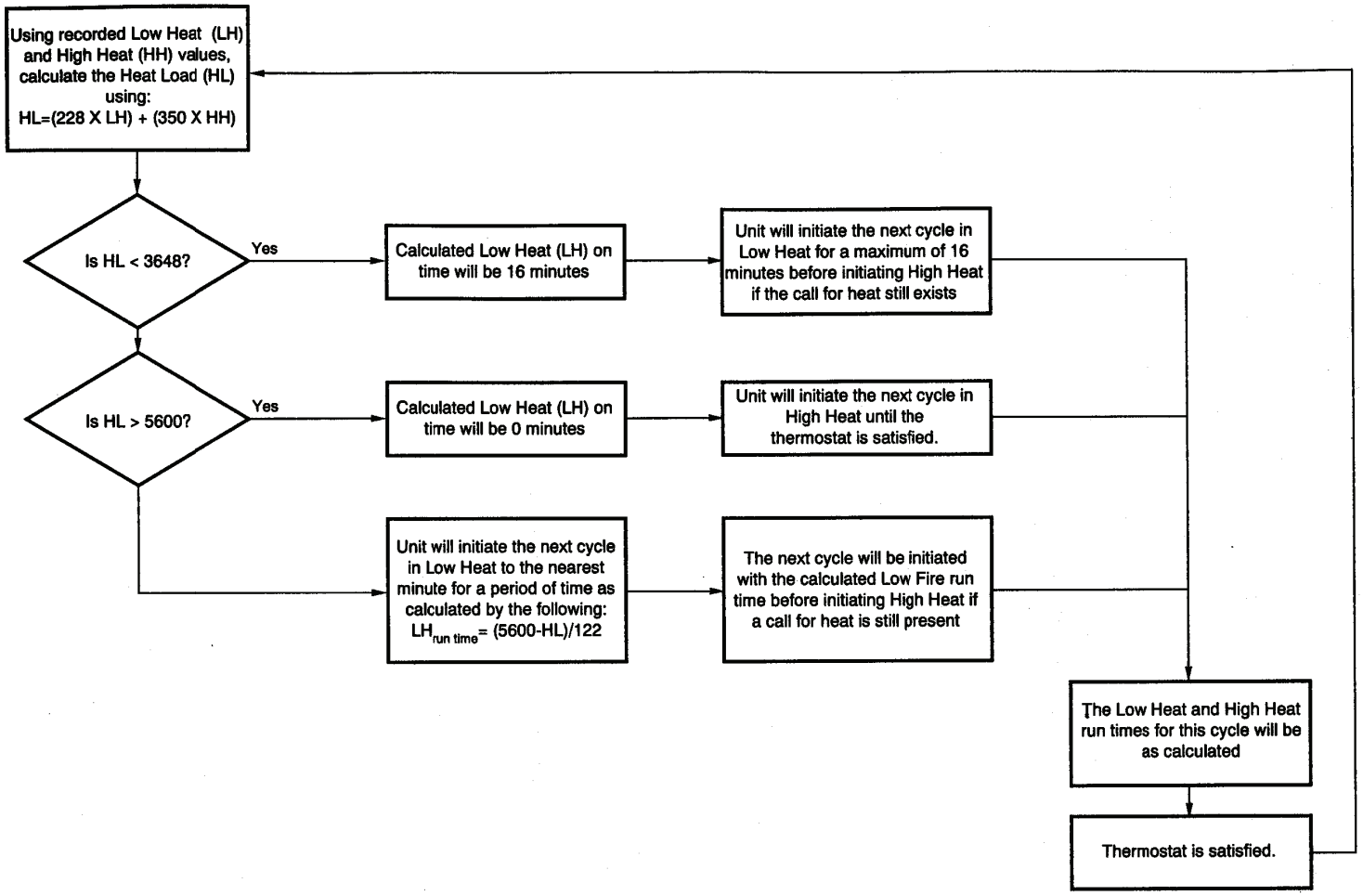

A12236

Copyright 2013 Carrier Corp. • 7310 W. Morris St. • Indianapolis, IN 46231
Edition Date: 11/13

Catalog No: TG−GFC80−01

Manufacturer reserves the right to change, at any time, specifications and designs without notice and without obligations.

Replaces: New