24ACB7
Performance™ 17 2–Stage Air Conditioner with Puron® Refrigerant
2 to 5 Tons

Carrier
turn to the experts™

Product Data

Puron Performance™ SERIES

Carrier Air Conditioners with Puron® refrigerant provide a collection of features unmatched by any other family of equipment. The 24ACB has been designed utilizing Carrier's Puron refrigerant. The environmentally sound refrigerant allows you to make a responsible decision in the protection of the earth's ozone layer.

This product has been designed and manufactured to meet Energy Star® criteria for energy efficiency when matched with appropriate coil components. Refer to the combination ratings in the Product Data for system combinations that meet Energy Star® guidelines.

NOTE: **Ratings contained in this document are subject to change at any time. Always refer to the AHRI directory (www.ahridirectory.org) for the most up-to-date ratings information.**

INDUSTRY LEADING FEATURES / BENEFITS

Efficiency

- Up to 17.0 SEER / Up to 13.0 EER
- Microtube Technology™ refrigeration system
- Indoor air quality accessories available

Sound

- Sound level as low as 72 dBA

Comfort

- System supports Thermidistat™ or standard 2-stage thermostat controls

Reliability

- Puron® refrigerant - environmentally sound, won't deplete the ozone layer and low lifetime service cost.
- Front-seating service valves
- 2-stage scroll compressor
- Internal pressure relief valve
- Internal thermal overload
- Low pressure switch
- High pressure switch
- Filter drier
- Balanced refrigeration system for maximum reliability

Durability

WeatherArmor Ultra™ protection package:

- Solid, Durable sheet metal construction
- Steel louver coil guard
- Baked-on, complete outer coverage, powder paint

Applications

- Long-line - up to 250 feet (76.2 m) total equivalent length, up to 200 feet (60.96 m) condenser above evaporator, or up to 80 ft. (24.38 m) evaporator above condenser (See Longline Guide for more information.)
- Low ambient cooling (down to 0°F / -17.8°C) with approved low ambient accessory kits.

MODEL NUMBER NOMENCLATURE

1	2	3	4	5	6	7	8	9	10	11	12	13
N	N	A	A	A/N	N	N	N	A/N	A/N	A/N	N	N
2	4	A	C	B	7	3	6	A	0	0	3	0
Product Series		Product Family	Tier	Major Series	SEER	Cooling Capacity		Variations	Design Variation	Not Defined	Voltage	Minor Series
24=AC		A=RES AC	C=Performance		7=17 SEER			A=Standard			3=208–230–1	0, 1, 2...

Puron

AHRI CERTIFIED™ www.ahridirectory.org

Use of the AHRI Certified TM Mark indicates a manufacturer's participation in the program For verification of certification for individual products, go to www.ahridirectory.org.

Certified System™

ISO 9001
QMI-SAI Global

c UL US

ENERGY STAR

This product has been designed and manufactured to meet Energy Star® criteria for energy efficiency when matched with appropriate coil components. However, proper refrigerant charge and proper air flow are critical to achieve rated capacity and efficiency. Installation of this product should follow all manufacturing refrigerant charging and air flow instructions. **Failure to confirm proper charge and air flow may reduce energy efficiency and shorten equipment life.**

STANDARD FEATURES

FEATURES	Unit Size – Series			
	24–31	36–31	48–31	60–32
Puron Refrigerant	X	X	X	X
Maximum SEER Rating*	17.0	17.0	17.0	16.0
2–Stage Scroll Compressor	X	X	X	X
Low Ambient Cooling Capability with Approved Kits	X	X	X	X
Crankcase Heater w/Temperature Switch	O	O	X	X
Louvered Coil Guard	X	X	X	X
Field Installed Filter Drier	X	X	X	X
Front Seating Service Valves	X	X	X	X
Internal Pressure Relief Valve	X	X	X	X
Internal Thermal Overload	X	X	X	X
Long Line capability	X	X	X	X
Low Pressure Switch	X	X	X	X
High Pressure Switch	X	X	X	X

X = Standard O = Accessory
* With approved combinations

REFRIGERANT PIPING LENGTH LIMITATIONS

Liquid Line Sizing and Maximum Total Equivalent Lengths† for Cooling Only Systems with Puron® Refrigerant:

The maximum allowable length of a residential split system depends on the liquid line diameter and vertical separation between indoor and outdoor units.

See Table below for liquid line sizing and maximum lengths :

Maximum Total Equivalent Length
Outdoor Unit BELOW Indoor Unit

Size	Liquid Line Connection	Liquid Line Diam. w/TXV	AC with Puron Refrigerant Maximum Total Equivalent Length†: Outdoor unit BELOW Indoor Vertical Separation ft (m)								
			0–5 (0–1.5)	6–10 (1.8–3.0)	11–20 (3.4–6.1)	21–30 (6.4–9.1)	31–40 (9.4–12.2)	41–50 (12.5–15.2)	51–60 (15.5–18.3)	61–70 (18.6–21.3)	71–80 (21.6–24.4)
024	3/8	1/4	75	75	75	50	50	– –	– –	– –	– –
		5/16	250*	250*	250*	250*	250*	225*	175	125	100
		3/8	250*	250*	250*	250*	250*	250*	250*	250*	250*
036	3/8	5/16	175	150	150	100	100	100	75	– –	– –
		3//8	250*	250*	250*	250*	250*	250*	250*	250*	250*
048	3/8	3/8	250*	250*	250*	250*	250*	250*	230	160	– –
060	3/8	3/8	250*	250*	250*	225*	190	150	110	– –	– –

*** Maximum actual length not to exceed 200 ft (61 m)**

† Total equivalent length accounts for losses due to elbows or fitting. See the Long Line Guideline for details.

– – = outside acceptable range

Maximum Total Equivalent Length
Outdoor Unit ABOVE Indoor Unit

Size	Liquid Line Connection	Liquid Line Diam. w/TXV	AC with Puron Refrigerant Maximum Total Equivalent Length†: Outdoor unit ABOVE Indoor Vertical Separation ft (m)							
			25 (7.6)	26–50 (7.9–15.2)	51–75 (15.5–22.9)	76–100 (23.2–30.5)	101–125 (30.8–38.1)	126–150 (38.4–45.7)	151–175 (46.0–53.3)	176–200 (53.6–61.0)
024	3/8	1/4	100	125	175	200	225*	250*	250*	250*
		5/16	250*	250*	250*	250*	250*	250*	250*	250*
		3/8	250*	250*	250*	250*	250*	250*	250*	250*
036	3/8	5/16	225*	250*	250*	250*	250*	250*	250*	250*
		3/8	250*	250*	250*	250*	250*	250*	250*	250*
048	3/8	3/8	250*	250*	250*	250*	250*	250*	250*	250*
060	3/8	3/8	250*	250*	250*	250*	250*	250*	250*	250*

*** Maximum actual length not to exceed 200 ft (61 m)**

† Total equivalent length accounts for losses due to elbows or fitting. See the Long Line Guideline for details.

REFRIGERANT CHARGE ADJUSTMENTS

Liquid Line Size	Puron Charge oz/ft (g/m)
3/8	0.60 (17.74) (Factory charge for lineset = 9 oz / 266.16 g)
5/16	0.40 (11.83)
1/4	0.27 (7.98)

Units are factory charged for 15 ft (4.6 m) of 3/8” liquid line. The factory charge for 3/8” lineset 9 oz.(266.16 g). When using other length or diameter liquid lines, charge adjustments are required per the chart above.

Charging Formula:

[(Lineset oz/ft x total length) – (factory charge for lineset)] = charge adjustment

Example 1: System has 15 ft of line set using existing 1/4“ liquid line. What charge adjustment is required?

Formula: (.27 oz/ft x 15ft) – (9 oz) = (-4.95) oz.

Net result is to remove 4.95 oz of refrigerant from the system

Example 2: System has 45 ft of existing 5/16” liquid line. What is the charge adjustment?

Formula: (.40 oz/ft. x 45ft) – (9 oz.) = 9 oz.

Net result is to add 9 oz of refrigerant to the system

NOTE: Conditions must be favorable for charging by subcooling method. Indoor temperature must be 70°F to 80°F (21.1°C to 26.7°C), and outdoor temperature must be 70°F to 100°F (21.1°C to 37.8°C). If outside these conditions, adjust charge for long line sets by weigh-in method.

LONG LINE APPLICATIONS

An application is considered Long Line, when the refrigerant level in the system requires the use of accessories to maintain acceptable refrigerant management for systems reliability. See Accessory Usage Guideline table for required accessories. Defining a system as long line depends on the liquid line diameter, actual length of the tubing, and vertical separation between the indoor and outdoor units.

For Air Conditioner systems, the chart below shows when an application is considered Long Line.

AC with Puron® Refrigerant Long Line Description ft (m) Beyond these lengths, a TXV is required

Total Length	Outdoor Unit Above or Below Indoor Unit
TXV required beyond 50 ft. (15.2 m)	TXV required beyond 20 ft. (6.1 m)

AC with Puron® Refrigerant Long Line Description ft (m) (Beyond these lengths, long line accessories are required)

Liquid Line Size	Units On Same Level	Outdoor Below Indoor	Outdoor Above Indoor
1/4 + TXV	No accessories needed within allowed lengths	No accessories needed within allowed lengths	175 (53.3)
5/16 + TXV	120 (36.6)	50 (15.2) vertical or 120 (36.6) total	120 (36.6)
3/8 + TXV	80 (24.4)	35 (10.7) vertical or 80 (24.4) total	80 (24.4)

Note: See Residential Piping and Long Line Guideline for details

VAPOR LINE SIZING AND COOLING CAPACITY LOSS

Acceptable vapor line diameters provide adequate oil return to the compressor while avoiding excessive capacity loss. The suction line diameters shown in the chart below are acceptable for AC systems with Puron refrigerant:

Vapor Line Sizing and Cooling Capacity Losses — Puron® Refrigerant 2-Stage Air Conditioner Applications

Unit Nominal Size (Btuh)	Maximum Liquid Line Diameters (In. OD)	Vapor Line Diameters (In.) OD	Cooling Capacity Loss (%) Total Equivalent Line Length ft. (m)								
			26–50 (7.9–15.2)	51–80 (15.5–24.4)	81–100 (24.7–30.5)	101–125 (30.8–38.1)	126–150 (38.4–45.7)	151–175 (46.0–50.3)	176–200 (53.6–60.0)	201–225 (61.3–68.6)	226–250 (68.9–76.2)
024	3/8	5/8	0	1	1	2	3	3	4	4	5
		3/4	0	0	0	0	1	1	1	1	1
036	3/8	5/8	1	2	4	5	6	7	9	10	11
		3/4	0	0	1	1	2	2	3	3	4
		7/8	0	0	0	0	1	1	1	1	2
048	3/8	3/4	1	2	2	3	4	5	6	7	7
		7/8	0	1	1	2	2	2	3	3	3
		1–1/8	0	0	—	—	—	—	—	—	—
060	3/8	3/4	1	2	4	5	6	7	9	10	11
		7/8	0	1	2	2	3	4	4	5	5
		1–1/8	0	0	0	1	1	1	1	1	1

Applications in this area may be long line and may have height restrictions. See the *Residential Piping and Long Line Guideline*.

— Applications in this area are not recommended due to insufficient oil return

PHYSICAL DATA

UNIT SIZE SERIES	24–31	36–31	48–31	60–32
Compressor Type	Ultratech 2–Stage Scroll			
REFRIGERANT	Puron® (R–410A)			
Control	TXV (Puron Hard Shutoff)			
Charge lb (kg)	6.64 (3.01)	9.26 (4.20)	12.94 (5.87)	12.70 (5.76)
COND FAN	Propeller Type, Direct Drive			
Air Discharge	Vertical			
Air Qty (CFM)	2481	3068	4700	4700
Motor HP	1/12	1/10	1/4	1/4
Motor RPM	800	825	825	825
COND COIL				
Face Area (Sq ft)	19.38	19.38	25.12	25.12
Fins per In.	25	20	20	20
Rows	1	2	2	2
Circuits	5	7	7	7
VALVE CONNECT. (In. ID)				
Vapor	3/4	7/8	7/8	7/8
Liquid	3/8			
REFRIGERANT TUBES (In. OD)				
Rated Vapor*	3/4	7/8	1–1/8	1–1/8
Liquid	3/8			

*Units are rated with 25 ft (7.6 m) of lineset length. See *Vapor Line Sizing and Cooling Capacity Loss* table when using other sizes and lengths of lineset.

ELECTRICAL DATA

UNIT SIZE – SERIES	V/PH	OPER VOLTS*		COMPR		FAN	MCA	MAX FUSE† or CKT BRK AMPS
		MAX	MIN	LRA	RLA	FLA		
24–31	208–230/1	253	197	58.3	11.1	0.6	14.5	20
36–31				83.0	15.3	0.7	19.8	35
48–31				104.0	21.2	1.3	27.8	40
60–32				152.9	28.8	1.3	37.3	60

* Permissible limits of the voltage range at which the unit will operate satisfactorily

† Time–Delay fuse.

FLA – Full Load Amps
LRA – Locked Rotor Amps
MCA – Minimum Circuit Amps
RLA – Rated Load Amps
NOTE: Control circuit is 24–V on all units and requires external power source. Copper wire must be used from service disconnect to unit. All motors/compressors contain internal overload protection.

Complies with 2010 requirements of ASHRAE Standards 90.1

A-WEIGHTED SOUND POWER LEVEL

UNIT SIZE–VOLTAGE,SERIES	STANDARD RATING (dBA)	TYPICAL OCTAVE BAND SPECTRUM (dBA, without tone adjustment)					
		125	250	500	1000	4000	8000
24–31	73 – High Stage	49.0	58.0	66.5	69.5	61.0	57.5
	74 – Low Stage	52.0	59.5	67.0	69.5	61.0	55.0
36–31	74 – High Stage	53.5	61.5	68.0	71.0	62.5	57.5
	73 – Low Stage	54.0	61.5	67.5	68.0	63.0	56.0
48–31	74 – High Stage	54.5	59.5	67.0	68.0	60.0	53.5
	72 – Low Stage	55.5	61.5	67.0	66.0	60.5	55.0
60–32	75 – low stage	71.0	70.0	69.0	70.0	63.0	60.0
	74 – high stage	69.0	68.0	69.0	71.0	61.0	59.0

NOTE: Tested in accordance with AHRI Standard 270–95. (Not listed with AHRI).

CHARGING SUBCOOLING (TXV-TYPE EXPANSION DEVICE)

UNIT SIZE–VOLTAGE, SERIES	REQUIRED SUBCOOLING °F (°C)
24–31	10 (5.6)
36–31	14 (7.8)
48–31	13 (7.2)
60–32	14 (7.8)

THERMOSTATS

PART NUMBER	PROGRAM	GAS	ELECTRIC	HEAT	COOL
Performance					
TP–PAC01	7–Day	√	√	1	1
TP–NAC01	NP	√	√	1	1

THERMOSTAT ACCESSORIES		
PART NUMBER	**BRIEF DESCRIPTION**	**THERMOSTATS USED WITH**
SYSTXCCRRS01	Indoor Remote Room Temperature Sensor	All TP– thermostats
TP–EXP01–A	ExP® Computer Programming Accessory	TP–P thermostats
TSTATXXCNV10‡	Thermostat Conversion Kit (4 to 5 wire) – 10 pack	All Carrier® branded thermostats
TX–LBP01	Large Decorative Backplate	TP–Pxx, TP–Nxx, TC–Pxx
TSTATXXSEN01–B	Outdoor Air Temperature Sensor	All TP– thermostats

‡ Available through RCD

ACCESSORIES

ORDER NUMBER	DESCRIPTION	24–31	36–31	48–31	60–32
KAACH1701AAA	CRKC HTR KIT	X	X	S	S
KAALS0201LLS	SOL VALVE KIT	X	X	X	X
KAAWS0101AAA	WINTER ST KIT	X	X	X	X
KSAFT0101AAA	FRZ THERM KIT	X	X	X	X
KSAHS2501AAA	HARD START KIT	X	X		
KSAHS2801AAA	HARD START KIT			X	X
KSALA0301410	LOW AMBIENT KIT	X	X	X	X
KSASF0101AAA	SPRT FEET KIT	X	X	X	X
KSASH2301COP	SOUND BLKT KIT	X	X		
KSASH2401COP	SOUND BLKT KIT			X	X

X = Accessory S= Standard

* Not backward compatible to previous series.

ACCESSORY USAGE GUIDELINE

Accessory	Required for Low Ambient Cooling Applications (Below 55° F / 12.8° C)	Required for Long Line Applications*	Required for Sea Coast Applications (within 2 miles/3.2 km)
Compressor Start Assist Capacitor and Relay	Yes	Yes	No
Crankcase Heater	Yes (standard on some units)	Yes (standard on some units)	No
Evaporator Freeze Thermostat	Yes	No	No
Hard Shutoff TXV	Yes (standard w/factory approved indoor unit)	Yes (standard w/factory approved indoor unit)	Yes (standard w/factory approved indoor unit)
Liquid Line Solenoid Valve	No	See Residential Piping and Long Line Guideline	No
Low–Ambient Pressure Switch	Yes	No	No
Support Feet	Recommended	No	Recommended
Winter Start Control	Yes	No	No

* For tubing line sets between 80 and 200 ft. (24.38 and 60.96 m) and/or 35 ft. (10.7 m) vertical differential, refer to Residential Piping and Longline Guideline.

Accessory Description and Usage (Listed Alphabetically)

1. Compressor Start Assist - Capacitor and Relay

Start capacitor and relay gives a ”hard” boost to compressor motor at each start up.

Usage Guideline:

Required for 2-stage non-communicating units in the following applications:

- Long line
- Low ambient cooling

Suggested for all compressors in areas with a history of low voltage problems.

2. Crankcase Heater

An electric resistance heater which mounts to the base of the compressor to keep the lubricant warm during off cycles. Improves compressor lubrication on restart and minimizes the chance of liquid slugging.

Usage Guideline:

Required in low ambient cooling applications.

Required in long line applications.

Suggested in all commercial applications.

3. Evaporator Freeze Thermostat

An SPST temperature-actuated switch that stops unit operation when evaporator reaches freeze-up conditions.

Usage Guideline:

Required when low ambient kit has been added.

4. Low-Ambient Pressure Switch

A long life pressure switch which is mounted to outdoor unit service valve. It is designed to cycle the outdoor fan motor in order to maintain head pressure within normal operating limits. The control will maintain working head pressure at low-ambient temperatures down to 0°F (-17.8°C) when properly installed.

Usage Guideline:

A Low-Ambient Pressure Switch must be used when cooling operation is used at outdoor temperatures below 55°F (12.8°C).

5. Support Feet

Four stick-on plastic feet that raise the unit 4 in. (101.6 mm) above the mounting pad. This allows sand, dirt, and other debris to be flushed from the unit base, minimizing corrosion.

Usage Guideline:

Suggested in the following applications:

Coastal installations.

Windy areas or where debris is normally circulating.

Rooftop installations.

For improved sound ratings.

6. Thermostatic Expansion Valve (TXV)

A modulating flow-control valve which meters refrigerant liquid flow rate into the evaporator in response to the superheat of the refrigerant gas leaving the evaporator.

Kit includes valve, adapter tubes, and external equalizer tube. Hard shut off types are available.

NOTE: When using a hard shut off TXV with single phase reciprocating compressors, a Compressor Start Assist Capacitor and Relay is required.

Usage Guideline:

Required to achieve AHRI ratings in certain equipment combinations. Refer to combination ratings.

Hard shut off TXV or LLS required in air conditioner long line applications.

7. Winter Start Control

This control is designed to alleviate nuisance opening of the low-pressure switch by bypassing it for the first 3 minutes of operation.

DIMENSIONS

UNIT	SERIES	ELECTRICAL CHARACTERISTICS				A		B		C		D		E		F		G		H		I		J		K		OPERATING WEIGHT		SHIPPING WEIGHT		SHIPPING LENGTH / WIDTH (Sq.)		SHIPPING HEIGHT	
						INCH	MM	INCH	MM	INCH	MM	INCH	MM	INCH	MM	INCH	MM	INCH	MM	INCH	MM	INCH	MM	INCH	MM	INCH	MM	Lbs	Kgs	Lbs	Kgs	INCH	MM	INCH	MM
24ACB724A0031030	1	Y	N	N	N	31 3/16	792.5	35 1/2	901.4	3/4	19.1	6 9/16	166.1	24 11/16	626.3	9 1/8	231.3	5/16	7.9	3	76.2	16	406.4	15 1/2	393.7	16 1/8	409.6	183	83.0	222	100.7	33 5/16	846.6	40	1015.8
24ACB736A0031030	1	Y	N	N	N	31 3/16	792.5	35 1/2	901.4	7/8	22.2	6 9/16	166.1	24 11/16	626.3	9 1/8	231.3	5/16	7.9	3	76.2	15 3/4	400.1	15 1/2	393.7	15	381.0	216	98.0	255	115.7	33 5/16	846.6	40	1015.8
24ACB748A0031030	1	Y	N	N	N	35	889.0	38 7/8	987.8	7/8	22.2	6 9/16	166.1	28 7/16	722.8	9 1/8	231.3	5/16	7.9	3	76.2	18 1/2	469.9	16 1/2	419.1	17	431.8	277	125.6	318	144.2	37 1/8	943.1	43 3/8	1102.2
24ACB760AB032030	2	Y	N	N	N	35	889.0	38 7/8	987.8	7/8	22.2	6 9/16	166.1	28 7/16	722.8	9 1/8	231.3	5/16	7.9	3	76.2	17 3/4	450.9	16 1/2	419.1	17	431.8	281	127.5	323	146.5	37 1/8	943.1	43 3/8	1102.2

208-230-1-60	208/230-3-60	460-3-60	575-3-60	Y=YES N=NO

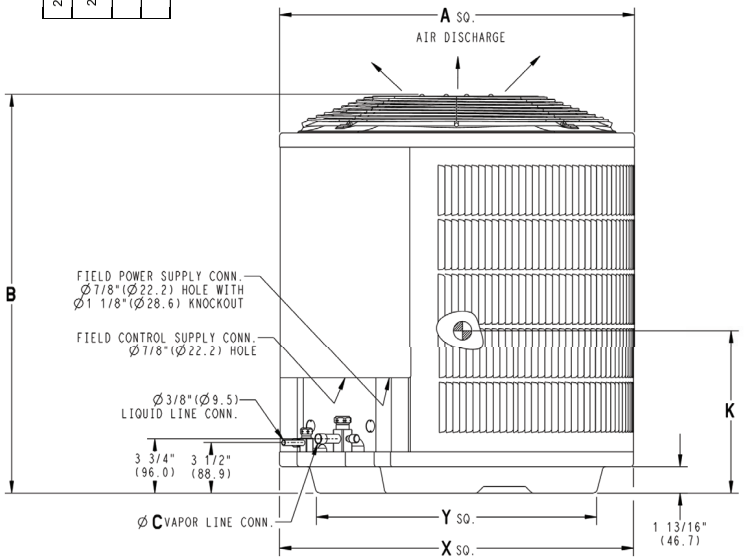

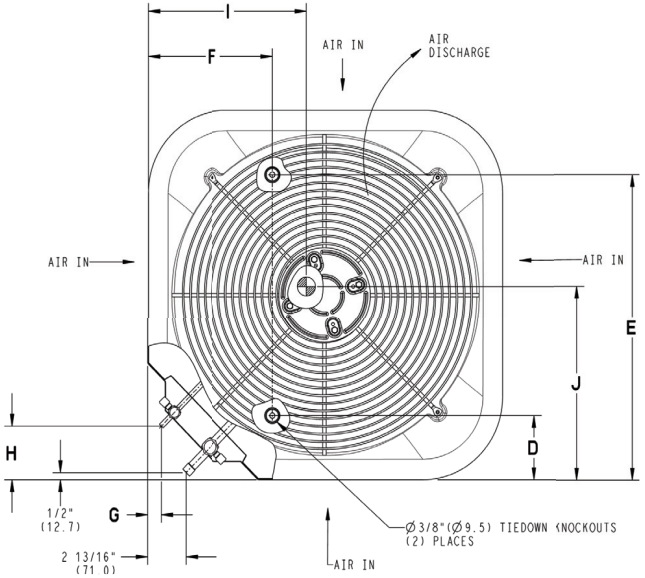

UNIT SIZE	"X" MINIMUM GROUND MOUNTING PAD APPLICATION DIMENSIONS		"Y" MINIMUM ROOF-TOP MOUNTING PAD APPLICATION DIMENSIONS	
-	23 1/8	587.3	17 7/8	454.6
-	25 3/4	654.0	20 7/16	518.5
24,36	31 3/16	792.5	22 15/16	583.2
48,60	35	889.0	26 3/4	679.7

NOTE: ALL DIMENSIONS IN INCH (MM)

U.S. ECCN: Not Subject to Regulation (N.S.R.)

SD5151-4 REV. F

CLEARANCES

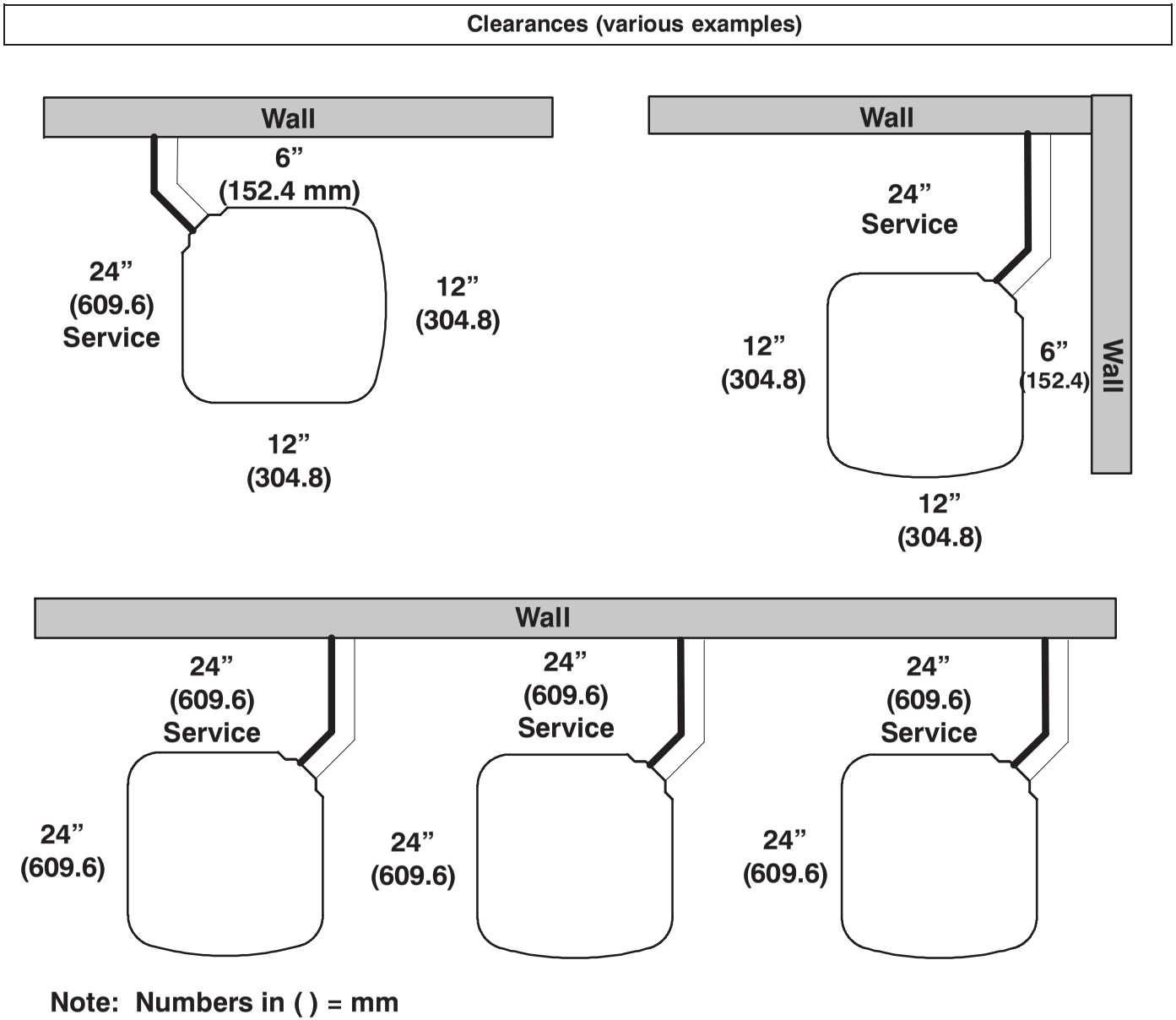

IMPORTANT: When installing multiple units in an alcove, roof well, or partially enclosed area, ensure there is adequate ventilation to prevent re-circulation of discharge air.

A07833

TESTED AHRI COMBINATION RATINGS

NOTE: Ratings contained in this document are subject to change at any time.

For AHRI ratings certificates, please refer to the AHRI directory www.ahridirectory.org

Additional ratings and system combinations can be accessed via the Carrier database at: www.MyCarrierRatings.com

For performance data at specific application &/or design conditions with various indoor unit combinations, the equipment performance calculator can be accessed at : http://rpmob.wrightsoft.com/

Model Number	Indoor Model	AHRI STANDARD RATINGS – COOLING					
		Capacity		EER	SEER	ID SCFM	
		High	Low			High	Low
24ACB724A**031	CNPV*3117AL*	25000	21200	12.2	14.0	800	680
24ACB736A**031	CAP**3721AL*	36800	30200	12.2	14.0	1050	840
24ACB748A**031	CAP**6124AL*	49000	40500	12.5	15.0	1400	1120
24ACB760AB*032	CAP**6124AL*	56500	44500	14.5	12.0	1625	1300

AHRI —Air Conditioning, Heating & Refrigeration Institute
EER —Energy Efficiency Ratio – 80°F (26.6°C) indoor db/67°F (19.4°C) indoor wb & 95°F (35°C) outdoor wb.
SEER —Seasonal Energy Efficiency Ratio
TDR —Time–Delay Relay. In most cases, only 1 method should be used to achieve TDR function. Using more than 1 method in a system may cause degradation in performance. Use either the accessory Time–Delay Relay KAATD0101TDR or a furnace equipped with TDR. Most Carrier furnaces are equipped with TDR.

NOTES:
1. Ratings are net values reflecting the effects of circulating fan motor heat. Supplemental electric heat is not included.
2 Tested outdoor/indoor combinations have been tested in accordance with DOE test procedures for central air conditioners. Ratings for other combinations are determined under DOE computer simulation procedures.
3. Determine actual CFM values obtainable for your system by referring to fan performance data in fan coil or furnace coil literature.
4. Do not apply with capillary tube coils as performance and reliability are affected.

DETAILED COOLING CAPACITIES#

EVAPORATOR AIR		CONDENSER ENTERING AIR TEMPERATURES °F (°C)																	
		75 (23.9)			85 (29.4)			95 (35)			105 (40.6)			115 (46.1)			125 (51.7)		
CFM	EWB °F (°C)	Capacity MBtuh		Total System KW**	Capacity MBtuh		Total System KW**	Capacity MBtuh		Total System KW**	Capacity MBtuh		Total System KW**	Capacity MBtuh		Total System KW**	Capacity MBtuh		Total System KW**
		Total	Sens‡		Total	Sens‡		Total	Sens‡		Total	Sens‡		Total	Sens‡		Total	Sens‡	
24ACB724A*031 Outdoor Section With CNPV*3117AL* Indoor Section High																			
600	57 (13.9)	22.30	22.30	1.61	21.56	21.56	1.77	20.75	20.75	1.95	19.87	19.87	2.16	18.91	18.91	2.41	17.90	17.90	2.71
	62 (16.7)	23.76	20.20	1.62	22.78	19.73	1.78	21.72	19.22	1.96	20.59	18.68	2.17	19.38	18.12	2.41	18.12	17.52	2.71
	63 (17.2)††	24.22	16.66	1.62	23.22	16.19	1.78	22.14	15.68	1.96	20.97	15.15	2.17	19.73	14.58	2.42	18.41	14.00	2.71
	67 (19.4)	26.19	17.29	1.63	25.11	16.81	1.79	23.94	16.31	1.97	22.69	15.77	2.18	21.36	15.21	2.43	19.98	14.64	2.72
	72 (22.2)	28.90	14.31	1.65	27.71	13.84	1.80	26.43	13.33	1.98	25.06	12.81	2.19	23.62	12.26	2.44	22.10	11.69	2.74
650	57 (13.9)	22.98	22.98	1.63	22.20	22.20	1.79	21.35	21.35	1.97	20.42	20.42	2.18	19.43	19.43	2.43	18.37	18.37	2.73
	62 (16.7)	24.16	21.11	1.64	23.17	20.63	1.80	22.08	20.11	1.98	20.90	19.56	2.19	19.68	18.98	2.43	18.79	17.66	2.73
	63 (17.2)††	24.61	17.28	1.64	23.58	16.80	1.80	22.46	16.28	1.98	21.26	15.74	2.19	19.98	15.17	2.44	18.63	14.57	2.73
	67 (19.4)	26.60	17.94	1.66	25.48	17.46	1.81	24.27	16.95	1.99	22.99	16.40	2.20	21.62	15.84	2.45	20.20	15.25	2.74
	72 (22.2)	29.33	14.74	1.67	28.10	14.25	1.82	26.78	13.72	2.00	25.37	13.19	2.21	23.88	12.64	2.46	22.32	12.07	2.76
700	57 (13.9)	23.59	23.59	1.66	22.78	22.78	1.81	21.89	21.89	1.99	20.92	20.92	2.21	19.89	19.89	2.46	18.79	18.79	2.75
	62 (16.7)	24.52	22.00	1.66	23.50	21.51	1.82	22.38	20.98	2.00	21.19	20.42	2.21	20.37	19.03	2.46	18.82	18.82	2.75
	63 (17.2)††	24.95	17.87	1.66	23.88	17.38	1.82	22.73	16.86	2.00	21.50	16.31	2.21	20.19	15.74	2.46	18.82	15.14	2.75
	67 (19.4)	26.95	18.58	1.68	25.79	18.09	1.83	24.56	17.57	2.01	23.24	17.02	2.22	21.84	16.45	2.47	20.38	15.86	2.76
	72 (22.2)	29.70	15.12	1.69	28.43	14.63	1.84	27.08	14.12	2.02	25.63	13.57	2.23	24.11	13.01	2.48	22.51	12.43	2.78
750	57 (13.9)	24.15	24.15	1.68	23.31	23.31	1.84	22.38	22.38	2.02	21.38	21.38	2.23	20.30	20.30	2.48	19.16	19.16	2.78
	62 (16.7)	24.84	22.86	1.68	23.79	22.36	1.84	22.66	21.82	2.02	21.47	21.22	2.23	20.34	20.34	2.48	19.20	19.20	2.78
	63 (17.2)††	25.24	18.45	1.69	24.14	17.96	1.84	22.96	17.43	2.02	21.70	16.88	2.23	20.37	16.29	2.48	18.97	15.69	2.77
	67 (19.4)	27.24	19.20	1.70	26.06	18.71	1.85	24.80	18.18	2.03	23.45	17.63	2.24	22.02	17.05	2.49	20.53	16.45	2.78
	72 (22.2)	30.01	15.50	1.71	28.71	15.01	1.86	27.32	14.48	2.04	25.84	13.94	2.25	24.29	13.37	2.50	22.66	12.78	2.80
800	57 (13.9)	24.66	24.66	1.70	23.78	23.78	1.86	22.82	22.82	2.04	21.79	21.79	2.25	20.68	20.68	2.50	19.50	19.50	2.80
	62 (16.7)	25.13	23.70	1.70	24.06	23.19	1.86	22.94	22.61	2.04	22.00	21.45	2.25	20.71	20.71	2.50	19.53	19.53	2.80
	63 (17.2)††	25.49	19.02	1.71	24.37	18.52	1.86	23.16	17.99	2.04	21.88	17.42	2.25	20.52	16.84	2.50	19.11	16.23	2.79
	67 (19.4)	27.50	19.81	1.72	26.30	19.32	1.87	25.00	18.78	2.05	23.62	18.22	2.26	22.18	17.64	2.51	20.66	17.03	2.80
	72 (22.2)	30.28	15.87	1.73	28.94	15.37	1.88	27.52	14.84	2.06	26.02	14.29	2.27	24.44	13.72	2.52	22.79	13.13	2.82
835	57 (13.9)	24.99	24.99	1.72	24.09	24.09	1.87	23.10	23.10	2.05	22.05	22.05	2.26	20.92	20.92	2.51	19.72	19.72	2.81
	62 (16.7)	25.34	24.28	1.72	24.26	23.74	1.87	23.33	22.74	2.05	22.08	22.08	2.26	20.95	20.95	2.51	19.75	19.75	2.81
	63 (17.2)††	25.64	19.41	1.72	24.51	18.91	1.87	23.28	18.37	2.05	21.99	17.81	2.26	20.61	17.21	2.51	19.18	16.60	2.81
	67 (19.4)	27.66	20.24	1.73	26.44	19.73	1.88	25.12	19.20	2.06	23.74	18.63	2.27	22.27	18.05	2.52	20.74	17.43	2.82
	72 (22.2)	30.44	16.12	1.75	29.09	15.62	1.90	27.65	15.09	2.08	26.13	14.53	2.29	24.53	13.96	2.54	22.86	13.36	2.83
900	57 (13.9)	25.55	25.55	1.74	24.61	24.61	1.90	23.59	23.59	2.08	22.49	22.49	2.29	21.32	21.32	2.54	20.08	20.08	2.84
	62 (16.7)	25.69	25.27	1.74	24.84	24.22	1.90	23.62	23.62	2.08	22.52	22.52	2.29	21.35	21.35	2.54	20.11	20.11	2.84
	63 (17.2)††	25.89	20.12	1.75	24.73	19.62	1.90	23.48	19.07	2.08	22.16	18.50	2.29	20.77	17.89	2.54	19.31	17.27	2.83
	67 (19.4)	27.92	21.00	1.76	26.66	20.49	1.91	25.33	19.95	2.09	23.91	19.38	2.30	22.42	18.79	2.55	20.87	18.17	2.84
	72 (22.2)	30.70	16.57	1.77	29.32	16.07	1.92	27.85	15.53	2.10	26.30	14.98	2.31	24.67	14.40	2.56	22.98	13.80	2.86

See notes on page 14

DETAILED COOLING CAPACITIES# (CONTINUED)

EVAPORATOR AIR		CONDENSER ENTERING AIR TEMPERATURES °F (°C)																	
		75 (23.9)			85 (29.4)			95 (35)			105 (40.6)			115 (46.1)			125 (51.7)		
CFM	EWB °F (°C)	Capacity MBtuh		Total Sys. KW**	Capacity MBtuh		Total Sys. KW**	Capacity MBtuh		Total Sys. KW**	Capacity MBtuh		Total Sys. KW**	Capacity MBtuh		Total Sys. KW**	Capacity MBtuh		Total Sys. KW**
		Total	Sens‡		Total	Sens‡		Total	Sens‡		Total	Sens‡		Total	Sens‡		Total	Sens‡	
24ACB724A*031 Outdoor Section With CNPV*3117AL* Indoor Section – Low																			
450	57 (13.9)	17.13	17.13	1.15	15.55	15.55	1.29	13.98	13.98	1.46	12.43	12.43	1.65	10.95	10.95	1.86	9.54	9.54	2.10
	62 (16.7)	18.23	15.64	1.14	16.39	14.37	1.28	14.57	13.11	1.45	12.79	11.88	1.64	11.11	10.69	1.86	9.59	9.52	2.10
	63 (17.2)††	18.60	12.88	1.13	16.73	11.77	1.28	14.86	10.66	1.45	13.04	9.59	1.64	11.32	8.56	1.86	9.71	7.58	2.10
	67 (19.4)	20.17	13.39	1.12	18.14	12.24	1.26	16.13	11.11	1.43	14.18	10.01	1.63	12.33	8.96	1.85	10.59	7.97	2.10
	72 (22.2)	22.34	11.09	1.09	20.09	10.07	1.24	17.89	9.07	1.41	15.75	8.11	1.61	13.73	7.20	1.84	11.82	6.34	2.09
500	57 (13.9)	17.84	17.84	1.16	16.18	16.18	1.30	14.53	14.53	1.47	12.91	12.91	1.66	11.36	11.36	1.87	9.89	9.89	2.12
	62 (16.7)	18.65	16.61	1.15	16.76	15.27	1.30	14.88	13.95	1.47	13.06	12.65	1.66	11.37	11.37	1.87	9.91	9.91	2.12
	63 (17.2)††	19.01	13.53	1.15	17.08	12.37	1.29	15.15	11.22	1.46	13.29	10.10	1.66	11.52	9.03	1.87	9.86	8.02	2.12
	67 (19.4)	20.60	14.09	1.13	18.50	12.89	1.28	16.43	11.72	1.45	14.43	10.57	1.64	12.54	9.47	1.86	10.75	8.44	2.11
	72 (22.2)	22.79	11.53	1.11	20.48	10.47	1.26	18.21	9.44	1.43	16.01	8.45	1.63	13.93	7.51	1.85	11.99	6.62	2.11
550	57 (13.9)	18.47	18.47	1.17	16.74	16.74	1.31	15.01	15.01	1.48	13.33	13.33	1.67	11.71	11.71	1.89	10.19	10.19	2.13
	62 (16.7)	19.01	17.55	1.16	17.07	16.15	1.31	15.15	14.76	1.48	13.49	13.09	1.67	11.73	11.73	1.89	10.20	10.20	2.13
	63 (17.2)††	19.35	14.16	1.16	17.35	12.96	1.31	15.38	11.76	1.48	13.48	10.61	1.67	11.67	9.50	1.89	9.98	8.45	2.14
	67 (19.4)	20.95	14.76	1.14	18.79	13.52	1.29	16.67	12.30	1.46	14.63	11.12	1.66	12.69	9.98	1.88	10.88	8.90	2.13
	72 (22.2)	23.16	11.94	1.12	20.78	10.86	1.27	18.46	9.79	1.44	16.21	8.79	1.64	14.09	7.81	1.87	12.11	6.90	2.13
600	57 (13.9)	19.02	19.02	1.18	17.22	17.22	1.33	15.43	15.43	1.50	13.69	13.69	1.69	12.02	12.02	1.90	10.45	10.45	2.15
	62 (16.7)	19.33	18.46	1.18	17.35	16.99	1.33	15.62	15.14	1.49	13.71	13.71	1.69	12.04	12.04	1.90	10.46	10.46	2.15
	63 (17.2)††	19.62	14.78	1.18	17.58	13.53	1.32	15.57	12.30	1.49	13.63	11.10	1.69	11.79	9.96	1.91	10.08	8.87	2.15
	67 (19.4)	21.24	15.42	1.16	19.03	14.14	1.31	16.87	12.87	1.48	14.79	11.65	1.68	12.82	10.47	1.90	10.98	9.35	2.15
	72 (22.2)	23.46	12.34	1.14	21.03	11.23	1.29	18.65	10.15	1.46	16.37	9.11	1.66	14.22	8.11	1.89	12.20	7.17	2.14
650	57 (13.9)	19.52	19.52	1.19	17.65	17.65	1.34	15.81	15.81	1.51	14.01	14.01	1.70	12.29	12.29	1.92	10.67	10.67	2.17
	62 (16.7)	19.91	18.83	1.19	17.81	17.43	1.34	15.83	15.83	1.51	14.03	14.03	1.70	12.31	12.31	1.92	10.69	10.69	2.17
	63 (17.2)††	19.85	15.37	1.19	17.77	14.09	1.34	15.73	12.82	1.51	13.76	11.58	1.70	11.91	10.40	1.92	10.16	9.27	2.17
	67 (19.4)	21.47	16.07	1.17	19.23	14.74	1.32	17.03	13.43	1.49	14.92	12.17	1.69	12.93	10.95	1.91	11.07	9.79	2.17
	72 (22.2)	23.70	12.73	1.15	21.23	11.60	1.30	18.81	10.49	1.47	16.50	9.42	1.68	14.31	8.40	1.90	12.27	7.44	2.16
680	57 (13.9)	19.78	19.78	1.20	17.89	17.89	1.35	16.01	16.01	1.52	14.18	14.18	1.71	12.44	12.44	1.93	10.79	10.79	2.18
	62 (16.7)	20.10	19.26	1.20	17.92	17.92	1.35	16.04	16.04	1.52	14.21	14.21	1.71	12.46	12.46	1.93	10.81	10.81	2.18
	63 (17.2)††	19.97	15.73	1.20	17.87	14.42	1.35	15.81	13.12	1.52	13.82	11.87	1.72	11.95	10.66	1.94	10.21	9.51	2.18
	67 (19.4)	21.59	16.45	1.18	19.33	15.10	1.33	17.11	13.77	1.50	14.99	12.48	1.70	12.98	11.24	1.93	11.11	10.05	2.18
	72 (22.2)	23.83	12.96	1.16	21.33	11.81	1.31	18.89	10.68	1.48	16.56	9.60	1.69	14.36	8.57	1.91	12.31	7.59	2.17
700	57 (13.9)	19.96	19.96	1.21	18.04	18.04	1.35	16.14	16.14	1.52	14.29	14.29	1.72	12.53	12.53	1.94	10.87	10.87	2.19
	62 (16.7)	20.20	19.56	1.20	18.07	18.07	1.35	16.16	16.16	1.52	14.32	14.32	1.72	12.55	12.55	1.94	10.89	10.89	2.19
	63 (17.2)††	20.04	15.96	1.21	17.93	14.63	1.36	15.86	13.33	1.53	13.87	12.05	1.72	11.99	10.83	1.94	10.24	9.67	2.19
	67 (19.4)	21.67	16.70	1.19	19.39	15.33	1.34	17.16	13.99	1.51	15.03	12.68	1.71	13.01	11.43	1.93	11.14	10.22	2.18
	72 (22.2)	23.90	13.11	1.17	21.39	11.95	1.32	18.94	10.81	1.49	16.60	9.72	1.69	14.39	8.68	1.92	12.33	7.70	2.18

See notes on page 14

DETAILED COOLING CAPACITIES# (CONTINUED)

EVAPORATOR AIR		CONDENSER ENTERING AIR TEMPERATURES °F (°C)																	
		75 (23.9)			85 (29.4)			95 (35)			105 (40.6)			115 (46.1)			125 (51.7)		
CFM	EWB °F (°C)	Capacity MBtuh Total	Capacity MBtuh Sens‡	Total Sys. KW**	Capacity MBtuh Total	Capacity MBtuh Sens‡	Total Sys. KW**	Capacity MBtuh Total	Capacity MBtuh Sens‡	Total Sys. KW**	Capacity MBtuh Total	Capacity MBtuh Sens‡	Total Sys. KW**	Capacity MBtuh Total	Capacity MBtuh Sens‡	Total Sys. KW**	Capacity MBtuh Total	Capacity MBtuh Sens‡	Total Sys. KW**
24ACB736A*031 Outdoor Section With CAP3721AL* Indoor Section – High**																			
900	57 (13.9)	33.46	33.46	2.30	32.30	32.30	2.58	31.04	31.04	2.91	29.65	29.65	3.29	28.10	28.10	3.73	26.35	26.35	4.23
	62 (16.7)	35.72	30.52	2.32	34.20	29.82	2.60	32.55	29.06	2.92	30.73	28.23	3.30	28.74	27.31	3.73	26.57	26.29	4.23
	63 (17.2)††	36.47	25.16	2.33	34.94	24.47	2.61	33.24	23.70	2.93	31.37	22.87	3.31	29.33	21.97	3.74	27.06	20.98	4.23
	67 (19.4)	39.41	26.11	2.36	37.73	25.40	2.63	35.92	24.64	2.95	33.89	23.80	3.33	31.70	22.90	3.76	29.25	21.90	4.26
	72 (22.2)	43.45	21.55	2.40	41.62	20.84	2.66	39.60	20.08	2.98	37.39	19.25	3.36	34.95	18.34	3.79	32.28	17.36	4.29
975	57 (13.9)	34.48	34.48	2.34	33.27	33.27	2.62	31.95	31.95	2.95	30.48	30.48	3.33	28.85	28.85	3.76	27.02	27.02	4.27
	62 (16.7)	36.31	31.90	2.36	34.75	31.19	2.63	33.05	30.41	2.96	31.18	29.56	3.33	29.15	28.61	3.77	27.06	27.06	4.27
	63 (17.2)††	37.05	26.10	2.36	35.45	25.38	2.64	33.70	24.62	2.96	31.79	23.77	3.34	29.67	22.86	3.78	27.35	21.86	4.27
	67 (19.4)	40.02	27.11	2.39	38.28	26.39	2.66	36.39	25.61	2.98	34.33	24.77	3.36	32.04	23.85	3.79	29.55	22.85	4.29
	72 (22.2)	44.08	22.16	2.43	42.18	21.45	2.70	40.11	20.67	3.02	37.82	19.83	3.39	35.33	18.92	3.82	32.57	17.93	4.32
1050	57 (13.9)	35.40	35.40	2.38	34.14	34.14	2.66	32.76	32.76	2.98	31.23	31.23	3.36	29.52	29.52	3.80	27.61	27.61	4.30
	62 (16.7)	36.83	33.26	2.39	35.21	32.52	2.66	33.48	31.73	2.99	31.58	30.84	3.37	29.57	29.57	3.80	27.66	27.66	4.31
	63 (17.2)††	37.54	27.01	2.40	35.89	26.29	2.67	34.10	25.51	2.99	32.12	24.65	3.37	29.97	23.74	3.81	27.58	22.71	4.30
	67 (19.4)	40.53	28.08	2.42	38.74	27.35	2.70	36.80	26.57	3.02	34.67	25.71	3.39	32.33	24.78	3.83	29.79	23.78	4.33
	72 (22.2)	44.61	22.76	2.47	42.67	22.04	2.73	40.53	21.26	3.05	38.01	20.34	3.41	35.62	19.48	3.86	32.81	18.48	4.35
1200	57 (13.9)	37.04	37.04	2.45	35.66	35.66	2.73	34.18	34.18	3.05	32.53	32.53	3.44	30.68	30.68	3.87	28.63	28.63	4.37
	62 (16.7)	37.72	35.86	2.45	36.06	35.08	2.73	34.41	33.92	3.06	32.57	32.57	3.43	30.72	30.72	3.87	28.67	28.67	4.37
	63 (17.2)††	38.34	28.78	2.46	36.60	28.04	2.73	34.72	27.24	3.06	32.66	26.37	3.43	30.41	25.42	3.87	27.95	24.39	4.37
	67 (19.4)	41.34	29.98	2.49	39.46	29.23	2.76	37.42	28.43	3.08	35.22	27.56	3.46	32.80	26.62	3.89	30.15	25.59	4.39
	72 (22.2)	45.45	23.92	2.53	43.39	23.18	2.79	41.16	22.38	3.11	38.72	21.53	3.49	36.09	20.60	3.92	33.17	19.58	4.42
1350	57 (13.9)	38.41	38.41	2.52	36.94	36.94	2.79	35.35	35.35	3.12	33.60	33.60	3.50	31.63	31.63	3.94	29.46	29.46	4.44
	62 (16.7)	38.92	37.40	2.52	37.01	37.01	2.79	35.40	35.40	3.12	33.64	33.64	3.50	31.68	31.68	3.94	29.50	29.50	4.45
	63 (17.2)††	38.91	30.48	2.52	37.11	29.72	2.79	35.20	28.92	3.12	33.06	28.02	3.50	30.76	27.07	3.94	28.23	25.99	4.43
	67 (19.4)	41.93	31.81	2.55	39.99	31.05	2.82	37.90	30.24	3.14	35.45	29.29	3.51	33.13	28.39	3.96	30.42	27.34	4.45
	72 (22.2)	46.03	25.01	2.59	43.92	24.27	2.86	41.63	23.47	3.17	39.10	22.59	3.55	36.39	21.65	3.98	33.39	20.63	4.48
24ACB736A*031 Outdoor Section With CAP3721AL* Indoor Section – Low**																			
720	57 (13.9)	25.27	25.27	1.66	23.25	23.25	1.85	21.24	21.24	2.07	19.23	19.23	2.31	17.21	17.21	2.60	15.19	15.19	2.92
	62 (16.7)	26.45	23.83	1.65	24.11	22.20	1.84	21.80	20.58	2.06	19.50	18.97	2.31	17.25	17.25	2.60	15.21	15.21	2.92
	63 (17.2)††	27.05	19.40	1.65	24.65	17.98	1.84	22.28	16.57	2.06	19.92	15.19	2.31	17.57	13.81	2.60	15.23	12.44	2.92
	67 (19.4)	29.36	20.22	1.63	26.75	18.75	1.82	24.18	17.31	2.04	21.64	15.88	2.29	19.13	14.48	2.58	16.58	13.07	2.90
	72 (22.2)	32.60	16.54	1.61	29.69	15.23	1.80	26.85	13.96	2.02	24.04	12.71	2.27	21.26	11.47	2.56	18.49	10.25	2.88
780	57 (13.9)	26.04	26.04	1.68	23.93	23.93	1.87	21.85	21.85	2.08	19.76	19.76	2.33	17.67	17.67	2.62	15.57	15.57	2.94
	62 (16.7)	26.87	24.96	1.67	24.48	23.27	1.86	22.12	21.58	2.08	19.81	19.81	2.33	17.70	17.70	2.61	15.60	15.60	2.94
	63 (17.2)††	27.45	20.17	1.67	24.99	18.70	1.86	22.57	17.24	2.08	20.17	15.82	2.33	17.77	14.40	2.61	15.39	12.99	2.94
	67 (19.4)	29.78	21.06	1.65	27.11	19.54	1.84	24.49	18.04	2.06	21.89	16.57	2.31	19.31	15.11	2.60	16.75	13.67	2.92
	72 (22.2)	33.07	17.05	1.62	30.08	15.71	1.82	27.17	14.40	2.04	24.30	13.12	2.29	21.47	11.86	2.58	18.65	10.61	2.90
840	57 (13.9)	26.72	26.72	1.69	24.55	24.55	1.88	22.39	22.39	2.10	20.24	20.24	2.35	18.08	18.08	2.63	15.92	15.92	2.95
	62 (16.7)	27.25	26.07	1.69	24.81	24.29	1.88	22.45	22.42	2.10	20.27	20.27	2.35	18.11	18.11	2.63	15.94	15.94	2.95
	63 (17.2)††	27.79	20.93	1.69	25.28	19.40	1.88	22.81	17.92	2.10	20.36	16.45	2.35	17.93	14.99	2.63	15.51	13.54	2.96
	67 (19.4)	30.14	21.87	1.67	27.41	20.30	1.86	24.74	18.76	2.08	22.10	17.25	2.33	19.48	15.75	2.62	16.88	14.26	2.94
	72 (22.2)	33.44	17.54	1.64	30.40	16.17	1.84	27.44	14.84	2.06	24.52	13.53	2.31	21.65	12.24	2.60	18.78	10.97	2.92
980	57 (13.9)	28.12	28.12	1.73	25.78	25.78	1.92	23.48	23.48	2.14	21.18	21.18	2.39	18.89	18.89	2.67	16.59	16.59	2.99
	62 (16.7)	28.46	27.56	1.73	25.85	25.85	1.92	23.52	23.52	2.14	21.21	21.21	2.39	18.91	18.91	2.67	16.62	16.62	2.99
	63 (17.2)††	28.40	22.63	1.73	25.80	21.02	1.92	23.24	19.44	2.14	20.72	17.87	2.39	18.22	16.32	2.68	15.74	14.77	3.01
	67 (19.4)	30.78	23.71	1.71	27.95	22.04	1.91	25.19	20.40	2.13	22.47	18.79	2.38	19.77	17.19	2.66	17.10	15.60	2.99
	72 (22.2)	34.12	18.66	1.69	30.98	17.23	1.88	27.90	15.83	2.11	24.90	14.46	2.36	21.93	13.11	2.64	18.99	11.78	2.97
1080	57 (13.9)	28.95	28.95	1.76	26.52	26.52	1.95	24.12	24.12	2.17	21.74	21.74	2.42	19.36	19.36	2.70	16.98	16.98	3.02
	62 (16.7)	29.00	29.00	1.76	26.56	26.56	1.95	24.15	24.15	2.17	21.77	21.77	2.42	19.39	19.39	2.70	17.00	17.00	3.02
	63 (17.2)††	28.73	23.81	1.76	26.07	22.13	1.96	23.48	20.49	2.18	20.92	18.86	2.43	18.38	17.23	2.71	15.89	15.59	3.04
	67 (19.4)	31.12	24.98	1.74	28.23	23.24	1.94	25.43	21.54	2.16	22.67	19.86	2.41	19.93	18.19	2.70	17.24	16.52	3.02
	72 (22.2)	34.46	19.43	1.72	31.26	17.96	1.92	28.14	16.52	2.14	25.09	15.12	2.39	22.06	13.72	2.68	19.08	12.35	3.00

See notes on page 14

DETAILED COOLING CAPACITIES# (CONTINUED)

EVAPORATOR AIR		CONDENSER ENTERING AIR TEMPERATURES °F (°C)																	
		75 (23.9)			85 (29.4)			95 (35)			105 (40.6)			115 (46.1)			125 (51.7)		
CFM	EWB °F (°C)	Capacity MBtuh Total	Capacity MBtuh Sens‡	Total Sys. KW**	Capacity MBtuh Total	Capacity MBtuh Sens‡	Total Sys. KW**	Capacity MBtuh Total	Capacity MBtuh Sens‡	Total Sys. KW**	Capacity MBtuh Total	Capacity MBtuh Sens‡	Total Sys. KW**	Capacity MBtuh Total	Capacity MBtuh Sens‡	Total Sys. KW**	Capacity MBtuh Total	Capacity MBtuh Sens‡	Total Sys. KW**
24ACB748A*031 Outdoor Section With CAP**6124AL* Indoor Section – High																			
1200	57 (13.9)	44.81	44.81	3.12	43.25	43.25	3.43	41.48	41.48	3.79	39.59	39.59	4.21	37.63	37.63	4.70	35.66	35.66	5.28
	62 (16.7)	47.79	40.93	3.14	45.71	39.92	3.45	43.41	38.82	3.80	40.97	37.66	4.22	38.49	36.48	4.71	36.03	35.28	5.29
	63 (17.2)††	48.76	33.72	3.15	46.64	32.72	3.46	44.28	31.63	3.81	41.77	30.48	4.23	39.22	29.33	4.72	36.65	28.19	5.30
	67 (19.4)	52.67	34.96	3.17	50.37	33.98	3.48	47.84	32.88	3.84	45.17	31.74	4.26	42.46	30.61	4.75	39.73	29.48	5.33
	72 (22.2)	57.99	28.83	3.19	55.51	27.82	3.51	52.75	26.77	3.87	49.88	25.64	4.30	46.96	24.56	4.80	44.00	23.46	5.39
1300	57 (13.9)	46.17	46.17	3.17	44.53	44.53	3.48	42.68	42.68	3.84	40.70	40.70	4.26	38.66	38.66	4.75	36.59	36.59	5.33
	62 (16.7)	48.57	42.76	3.18	46.44	41.74	3.49	44.07	40.61	3.85	41.57	39.42	4.26	39.06	38.18	4.75	36.86	36.28	5.33
	63 (17.2)††	49.51	34.97	3.19	47.31	33.95	3.50	44.88	32.84	3.85	42.30	31.68	4.27	39.68	30.51	4.76	37.07	29.36	5.33
	67 (19.4)	53.44	36.30	3.21	51.08	35.28	3.52	48.47	34.18	3.88	45.73	33.03	4.30	42.95	31.88	4.79	40.14	30.74	5.38
	72 (22.2)	58.81	29.66	3.23	56.23	28.64	3.55	53.42	27.54	3.91	50.45	26.45	4.34	47.46	25.33	4.84	44.43	24.22	5.43
1400	57 (13.9)	47.41	47.41	3.21	45.69	45.69	3.52	43.76	43.76	3.88	41.70	41.70	4.30	39.57	39.57	4.80	37.43	37.43	5.38
	62 (16.7)	49.26	44.55	3.22	47.07	43.51	3.53	44.66	42.36	3.89	42.14	41.11	4.31	40.07	38.78	4.80	37.49	37.49	5.38
	63 (17.2)††	50.14	36.17	3.23	47.88	35.15	3.54	45.39	34.03	3.90	42.76	32.85	4.31	40.07	31.67	4.80	37.39	30.50	5.38
	67 (19.4)	54.09	37.59	3.25	51.66	36.57	3.56	49.00	35.45	3.92	46.19	34.30	4.34	43.34	33.12	4.84	40.48	31.97	5.42
	72 (22.2)	59.49	30.46	3.27	56.86	29.39	3.59	53.97	28.30	3.95	50.93	27.20	4.38	47.87	26.09	4.88	44.77	24.97	5.48
1500	57 (13.9)	48.54	48.54	3.26	46.75	46.75	3.57	44.74	44.74	3.93	42.60	42.60	4.35	40.40	40.40	4.84	38.18	38.18	5.43
	62 (16.7)	49.88	46.31	3.26	47.65	45.23	3.58	45.22	44.03	3.93	43.10	41.75	4.35	40.47	40.47	4.85	38.24	38.24	5.43
	63 (17.2)††	50.69	37.36	3.27	48.38	36.31	3.58	45.82	35.19	3.94	43.13	33.99	4.35	40.41	32.82	4.84	37.68	31.63	5.42
	67 (19.4)	54.66	38.86	3.29	52.16	37.82	3.60	49.45	36.70	3.96	46.58	35.53	4.38	43.69	34.36	4.88	40.78	33.19	5.46
	72 (22.2)	60.09	31.19	3.31	57.37	30.20	3.63	54.40	29.10	3.99	51.32	27.97	4.42	48.20	26.84	4.93	45.05	25.72	5.52
1600	57 (13.9)	49.57	49.57	3.30	47.70	47.70	3.61	45.63	45.63	3.97	43.42	43.42	4.39	41.15	41.15	4.89	38.86	38.86	5.48
	62 (16.7)	50.46	48.01	3.31	48.20	46.89	3.62	46.02	45.05	3.98	43.49	43.49	4.40	41.21	41.21	4.89	38.92	38.92	5.48
	63 (17.2)††	51.16	38.52	3.31	48.80	37.46	3.62	46.19	36.32	3.98	43.46	35.12	4.39	40.69	33.92	4.89	37.92	32.73	5.47
	67 (19.4)	55.13	40.11	3.33	52.60	39.06	3.64	49.85	37.93	4.00	46.91	36.75	4.42	43.99	35.57	4.92	41.04	34.39	5.50
	72 (22.2)	60.59	31.95	3.35	57.80	30.95	3.67	54.78	29.83	4.03	51.65	28.70	4.46	48.48	27.56	4.97	45.28	26.43	5.56
1700	57 (13.9)	50.51	50.51	3.34	48.59	48.59	3.66	46.44	46.44	4.02	44.16	44.16	4.44	41.83	41.83	4.94	39.47	39.47	5.53
	62 (16.7)	51.01	49.65	3.35	48.77	48.41	3.66	46.53	46.53	4.02	44.23	44.23	4.44	41.89	41.89	4.94	39.53	39.53	5.53
	63 (17.2)††	51.57	39.66	3.35	49.15	38.59	3.66	46.52	37.44	4.02	43.77	36.24	4.43	40.93	35.02	4.93	38.15	33.82	5.51
	67 (19.4)	55.56	41.33	3.37	52.97	40.28	3.68	50.13	39.12	4.04	47.24	37.96	4.46	44.24	36.75	4.96	41.26	35.57	5.55
	72 (22.2)	60.99	32.71	3.39	58.16	31.69	3.71	55.11	30.57	4.07	51.93	29.42	4.50	48.71	28.27	5.01	45.47	27.13	5.60
24ACB748A*031 Outdoor Section With CAP**6124AL* Indoor Section – Low																			
960	57 (13.9)	33.80	33.80	2.21	31.13	31.13	2.49	28.39	28.39	2.81	25.62	25.62	3.17	22.86	22.86	3.58	20.12	20.12	4.04
	62 (16.7)	35.36	31.84	2.19	32.26	29.72	2.48	29.07	27.57	2.80	25.88	25.39	3.17	22.90	22.90	3.58	20.16	20.16	4.04
	63 (17.2)††	36.13	25.91	2.19	32.96	24.06	2.48	29.70	22.17	2.80	26.40	20.29	3.16	23.13	18.43	3.58	19.90	16.60	4.05
	67 (19.4)	39.28	27.05	2.16	35.89	25.16	2.45	32.41	23.24	2.78	28.90	21.33	3.14	25.40	19.44	3.56	21.95	17.58	4.03
	72 (22.2)	43.74	22.16	2.13	40.05	20.51	2.43	36.26	18.83	2.75	32.44	17.14	3.12	28.64	15.48	3.54	24.87	13.85	4.00
1010	57 (13.9)	34.44	34.44	2.22	31.72	31.72	2.50	28.92	28.92	2.82	26.09	26.09	3.18	23.27	23.27	3.59	20.47	20.47	4.06
	62 (16.7)	35.71	32.77	2.21	32.58	30.62	2.50	29.37	28.41	2.82	26.34	25.76	3.18	23.31	23.31	3.59	20.51	20.51	4.06
	63 (17.2)††	36.47	26.56	2.20	33.25	24.68	2.49	29.95	22.75	2.82	26.62	20.84	3.18	23.30	18.94	3.60	20.04	17.08	4.06
	67 (19.4)	39.65	27.74	2.18	36.21	25.82	2.47	32.68	23.87	2.80	29.13	21.92	3.16	25.60	19.99	3.58	22.11	18.10	4.04
	72 (22.2)	44.16	22.60	2.15	40.42	20.90	2.44	36.57	19.21	2.77	32.70	17.51	3.14	28.85	15.82	3.55	25.04	14.17	4.02
1120	57 (13.9)	35.74	35.74	2.25	32.90	32.90	2.53	29.98	29.98	2.85	27.03	27.03	3.22	24.09	24.09	3.63	21.17	21.17	4.09
	62 (16.7)	36.44	34.83	2.24	33.25	32.52	2.53	30.67	28.81	2.85	27.08	27.08	3.22	24.13	24.13	3.63	21.21	21.21	4.09
	63 (17.2)††	37.11	27.95	2.24	33.82	25.99	2.53	30.44	24.01	2.85	27.02	22.02	3.22	23.63	20.05	3.63	20.31	18.11	4.10
	67 (19.4)	40.33	29.26	2.21	36.81	27.25	2.50	33.20	25.22	2.83	29.56	23.20	3.20	25.95	21.19	3.61	22.40	19.22	4.08
	72 (22.2)	44.91	23.52	2.18	41.07	21.79	2.48	37.13	20.06	2.81	33.17	18.29	3.18	29.23	16.56	3.59	25.33	14.86	4.06
1280	57 (13.9)	37.37	37.37	2.29	34.37	34.37	2.58	31.30	31.30	2.90	28.20	28.20	3.27	25.10	25.10	3.68	22.04	22.04	4.14
	62 (16.7)	37.95	36.41	2.29	34.43	34.43	2.58	31.35	31.35	2.90	28.24	28.24	3.27	25.14	25.14	3.68	22.08	22.07	4.14
	63 (17.2)††	37.84	29.90	2.29	34.45	27.85	2.58	30.98	25.76	2.91	27.48	23.68	3.27	24.02	21.61	3.69	20.64	19.55	4.16
	67 (19.4)	41.11	31.35	2.26	37.49	29.26	2.56	33.79	27.13	2.88	30.06	24.99	3.25	26.37	22.89	3.67	22.74	20.81	4.13
	72 (22.2)	45.75	24.82	2.23	41.79	23.02	2.53	37.75	21.20	2.86	33.68	19.39	3.23	29.63	17.60	3.65	25.63	15.84	4.11
1440	57 (13.9)	38.75	38.75	2.34	35.62	35.62	2.63	32.42	32.42	2.95	29.18	29.18	3.32	25.95	25.95	3.73	22.76	22.76	4.19
	62 (16.7)	38.81	38.81	2.34	35.68	35.68	2.63	32.47	32.47	2.95	29.23	29.23	3.32	25.99	25.99	3.73	22.79	22.79	4.19
	63 (17.2)††	38.40	31.79	2.34	34.94	29.64	2.63	31.40	27.46	2.96	27.84	25.28	3.33	24.34	23.09	3.74	20.96	20.84	4.21
	67 (19.4)	41.71	33.40	2.32	38.01	31.21	2.61	34.23	28.98	2.94	30.44	26.75	3.31	26.70	24.52	3.72	23.04	22.29	4.19
	72 (22.2)	46.37	26.04	2.29	42.32	24.19	2.58	38.18	22.34	2.91	34.02	20.49	3.29	29.90	18.61	3.70	25.84	16.78	4.17

See notes on page 14

DETAILED COOLING CAPACITIES# (CONTINUED)

EVAPORATOR AIR		CONDENSER ENTERING AIR TEMPERATURES °F (°C)																	
		75 (23.9)			85 (29.4)			95 (35)			105 (40.6)			115 (46.1)			125 (51.7)		
CFM	EWB °F (°C)	Capacity MBtuh Total	Capacity MBtuh Sens‡	Total Sys. KW**	Capacity MBtuh Total	Capacity MBtuh Sens‡	Total Sys. KW**	Capacity MBtuh Total	Capacity MBtuh Sens‡	Total Sys. KW**	Capacity MBtuh Total	Capacity MBtuh Sens‡	Total Sys. KW**	Capacity MBtuh Total	Capacity MBtuh Sens‡	Total Sys. KW**	Capacity MBtuh Total	Capacity MBtuh Sens‡	Total Sys. KW**
24ACB760AB032 Outdoor Section With CAP6124AL* Indoor Section – High**																			
1500	57 (13.9)	52.86	52.86	3.81	51.03	51.03	4.17	49.08	49.08	4.58	46.93	46.93	5.05	44.52	44.52	5.60	41.77	41.77	6.21
	62 (16.7)	55.69	48.76	3.84	53.31	47.64	4.19	50.79	46.46	4.60	48.06	45.18	5.07	45.06	43.75	5.60	41.74	41.74	6.21
	63 (17.2)††	56.79	39.92	3.85	54.36	38.80	4.20	51.76	37.63	4.61	48.94	36.37	5.07	45.81	34.99	5.61	42.35	33.48	6.22
	67 (19.4)	61.31	41.44	3.90	58.67	40.31	4.25	55.83	39.13	4.65	52.75	37.85	5.12	49.38	36.47	5.66	45.62	34.95	6.26
	72 (22.2)	67.55	33.95	3.96	64.42	32.75	4.30	61.47	31.63	4.72	58.04	30.35	5.18	54.28	28.96	5.72	50.16	27.42	6.33
1625	57 (13.9)	54.39	54.39	3.88	52.47	52.47	4.23	50.41	50.41	4.64	48.15	48.15	5.12	45.60	45.60	5.66	42.74	42.74	6.27
	62 (16.7)	56.55	50.96	3.90	54.10	49.81	4.25	51.51	48.60	4.66	48.72	47.26	5.12	45.72	45.62	5.66	42.80	42.80	6.27
	63 (17.2)††	57.59	41.39	3.91	55.07	40.26	4.26	52.40	39.08	4.66	49.48	37.79	5.13	46.28	36.40	5.67	42.72	34.86	6.27
	67 (19.4)	62.15	43.03	3.95	59.42	41.89	4.30	56.50	40.68	4.71	53.33	39.39	5.18	49.84	37.98	5.71	45.99	36.44	6.32
	72 (22.2)	68.43	34.93	4.02	65.39	33.78	4.37	62.16	32.57	4.77	58.63	31.26	5.24	54.80	29.86	5.78	50.53	28.32	6.38
1750	57 (13.9)	55.76	55.76	3.94	53.76	53.76	4.29	51.60	51.60	4.71	49.24	49.24	5.18	46.59	46.59	5.72	43.60	43.60	6.34
	62 (16.7)	57.31	53.09	3.95	54.80	51.91	4.31	52.18	50.65	4.71	49.87	48.12	5.19	46.66	46.66	5.72	43.67	43.67	6.34
	63 (17.2)††	58.26	42.83	3.96	55.68	41.69	4.31	52.92	40.47	4.72	49.93	39.18	5.19	46.67	37.77	5.72	43.03	36.21	6.33
	67 (19.4)	62.85	44.57	4.01	60.03	43.41	4.36	57.05	42.19	4.76	53.79	40.87	5.23	50.24	39.46	5.77	46.31	37.90	6.37
	72 (22.2)	69.20	35.92	4.08	65.95	34.66	4.42	62.68	33.47	4.83	59.12	32.16	5.29	55.14	30.71	5.83	50.83	29.18	6.44
2000	57 (13.9)	58.07	58.07	4.06	55.90	55.90	4.42	53.58	53.58	4.83	51.01	51.01	5.30	48.19	48.19	5.84	44.96	44.96	6.45
	62 (16.7)	58.62	57.09	4.07	56.08	55.76	4.42	53.66	53.66	4.83	51.09	51.09	5.30	48.25	48.25	5.84	45.03	45.03	6.46
	63 (17.2)††	59.34	45.61	4.07	56.62	44.43	4.42	53.75	43.19	4.83	50.63	41.85	5.29	47.24	40.41	5.83	43.48	38.79	6.43
	67 (19.4)	63.96	47.56	4.12	61.03	46.38	4.47	57.88	45.12	4.87	54.51	43.77	5.34	50.80	42.30	5.87	46.76	40.71	6.48
	72 (22.2)	70.34	37.66	4.19	67.07	36.47	4.53	63.58	35.22	4.93	59.85	33.88	5.40	55.75	32.43	5.94	51.28	30.87	6.55
24ACB760AB032 Outdoor Section With CAP6124AL* Indoor Section – Low**																			
1100	57 (13.9)	39.47	39.47	2.61	36.39	36.39	2.93	33.18	33.17	3.30	29.90	29.90	3.71	26.63	26.63	4.17	23.40	23.40	4.69
	62 (16.7)	41.54	36.96	2.59	37.89	34.50	2.92	34.11	31.99	3.29	30.29	29.44	3.71	26.70	26.70	4.17	23.44	23.44	4.69
	63 (17.2)††	42.47	30.19	2.59	38.74	28.02	2.92	34.87	25.80	3.29	30.92	23.57	3.71	27.01	21.39	4.17	23.18	19.23	4.69
	67 (19.4)	46.16	31.48	2.56	42.12	29.27	2.89	37.96	27.00	3.27	33.75	24.71	3.68	29.56	22.50	4.15	25.47	20.32	4.67
	72 (22.2)	51.16	25.80	2.52	46.73	23.82	2.86	42.18	21.81	3.24	37.59	19.81	3.66	33.03	17.84	4.13	28.56	15.92	4.65
1225	57 (13.9)	41.11	41.11	2.64	37.86	37.86	2.97	34.48	34.48	3.34	31.05	31.05	3.75	27.62	27.62	4.21	24.23	24.23	4.73
	62 (16.7)	42.45	39.32	2.63	38.70	36.74	2.96	34.84	34.07	3.33	31.11	31.11	3.75	27.67	27.67	4.21	24.27	24.27	4.73
	63 (17.2)††	43.35	31.80	2.63	39.49	29.54	2.96	35.50	27.24	3.33	31.45	24.93	3.75	27.43	22.64	4.22	23.51	20.42	4.74
	67 (19.4)	47.06	33.20	2.60	42.89	30.88	2.93	38.60	28.53	3.31	34.28	26.17	3.73	29.98	23.86	4.19	25.80	21.61	4.72
	72 (22.2)	52.13	26.86	2.56	47.56	24.83	2.90	42.87	22.76	3.28	38.15	20.70	3.70	33.47	18.67	4.17	28.89	16.70	4.69
1350	57 (13.9)	42.54	42.54	2.67	39.15	39.15	3.00	35.63	35.63	3.37	32.05	32.05	3.79	28.47	28.47	4.25	24.94	24.94	4.77
	62 (16.7)	43.25	41.59	2.67	39.54	38.98	3.00	35.69	35.69	3.37	32.10	32.10	3.79	28.52	28.52	4.25	24.98	24.98	4.77
	63 (17.2)††	44.04	33.35	2.67	41.92	41.92	2.98	36.00	28.63	3.37	31.86	26.24	3.79	27.77	23.88	4.26	23.78	21.57	4.78
	67 (19.4)	47.76	34.85	2.64	43.49	32.46	2.97	39.11	30.03	3.35	34.69	27.60	3.77	30.32	25.20	4.24	26.05	22.85	4.76
	72 (22.2)	52.88	27.89	2.60	48.19	25.79	2.94	43.39	23.67	3.32	38.57	21.56	3.74	33.80	19.49	4.21	29.12	17.46	4.73
1475	57 (13.9)	43.82	43.82	2.71	40.29	40.29	3.04	36.62	36.62	3.41	32.91	32.91	3.83	29.16	29.16	4.29	25.55	25.55	4.81
	62 (16.7)	44.56	42.51	2.70	40.36	40.36	3.04	36.68	36.68	3.41	32.96	32.96	3.82	29.24	29.24	4.29	25.59	25.59	4.81
	63 (17.2)††	44.62	34.87	2.71	40.58	32.45	3.04	36.41	29.99	3.41	32.20	27.53	3.83	28.04	25.08	4.30	24.01	22.68	4.83
	67 (19.4)	48.34	36.48	2.68	43.99	34.01	3.01	39.45	31.46	3.39	35.02	28.98	3.81	30.58	26.50	4.28	26.27	24.06	4.80
	72 (22.2)	53.48	28.88	2.64	48.68	26.73	2.98	43.67	24.54	3.35	38.90	22.39	3.78	34.04	20.27	4.25	29.30	18.21	4.78

† Total and sensible capacities are net capacities. Blower motor heat has been subtracted.

‡ Sensible capacities shown are based on 80°F (27°C) entering air at the indoor coil. For sensible capacities at other than 80°F (27°C), deduct 835 Btuh (245 kW) per 1000 CFM (480 L/S) of indoor coil air for each degree below 80°F (27°C), or add 835 Btuh (245 kW) per 1000 CFM (480 L/S) of indoor coil air per degree above 80°F (27°C).

Detailed cooling capacities are based on indoor and outdoor unit at the same elevation per AHRI standard 210/240–2008. If additional tubing length and/or indoor unit is located above outdoor unit, a slight variation in capacity may occur.

** System kw is total of indoor and outdoor unit kilowatts.

At TVA rating indoor condition (75°F edb/63°F ewb). All other indoor air temperatures are at 80°F edb.

EWB — Entering Wet Bulb

NOTE: When the required data fall between the published data, interpolation may be performed. Extrapolation is not an acceptable practice.

CONDENSER ONLY RATINGS*

SST °F (°C)		CONDENSER ENTERING AIR TEMPERATURES °F (°C)							
		55 (12.78)	65 (18.33)	75 (23.89)	85 (29.44)	95 (35.0)	105 (40.56)	115 (46.11)	125 (51.67)
24ACB724A*031 – High									
30 (–1.11)	TCG	20.20	19.70	19.00	18.10	17.10	16.00	14.80	13.60
	SDT	71.20	81.10	90.90	100.60	110.20	119.90	129.60	139.40
	KW	1.07	1.20	1.34	1.49	1.67	1.87	2.12	2.41
35 (1.67)	TCG	22.50	21.90	21.10	20.10	19.10	17.90	16.70	15.30
	SDT	72.70	82.40	92.20	101.80	111.40	121.10	130.80	140.50
	KW	1.10	1.23	1.36	1.51	1.69	1.90	2.15	2.44
40 (4.44)	TCG	24.90	24.20	23.30	22.30	21.20	20.00	18.60	17.20
	SDT	74.20	83.80	93.50	103.10	112.70	122.30	132.00	141.60
	KW	1.12	1.25	1.38	1.54	1.71	1.92	2.17	2.47
45 (7.22)	TCG	27.50	26.70	25.70	24.60	23.40	22.10	20.70	19.20
	SDT	75.70	85.30	94.90	104.50	114.00	123.50	133.10	142.80
	KW	1.15	1.27	1.40	1.56	1.73	1.95	2.20	2.50
50 (10.0)	TCG	30.30	29.40	28.30	27.10	25.80	24.40	23.00	21.40
	SDT	77.30	86.90	96.40	105.90	115.30	124.80	134.30	143.90
	KW	1.17	1.29	1.42	1.58	1.76	1.97	2.22	2.53
55 (12.78)	TCG	33.30	32.20	31.10	29.80	28.40	26.90	25.30	23.70
	SDT	79.00	88.40	97.90	107.30	116.70	126.10	135.60	145.00
	KW	1.19	1.31	1.44	1.60	1.78	1.99	2.25	2.56
60 (15.56)	TCG	36.40	35.20	34.00	32.60	31.10	29.50	27.90	26.10
	SDT	80.70	90.10	99.40	108.80	118.10	127.40	136.80	146.20
	KW	1.21	1.33	1.46	1.62	1.80	2.02	2.28	2.58
24ACB724A*031 Low									
30 (–1.11)	TCG	14.50	14.20	13.70	12.90	12.00	11.00	9.90	8.80
	SDT	63.50	73.40	83.10	92.70	102.20	111.70	121.10	130.60
	KW	0.79	0.91	1.04	1.18	1.34	1.51	1.69	1.90
35 (1.67)	TCG	16.20	15.90	15.30	14.50	13.50	12.40	11.30	10.20
	SDT	64.30	74.10	83.80	93.40	102.90	112.30	121.80	131.20
	KW	0.78	0.90	1.02	1.17	1.33	1.50	1.69	1.89
40 (4.44)	TCG	18.10	17.70	17.00	16.10	15.10	14.00	12.80	11.60
	SDT	65.20	75.00	84.60	94.10	103.60	113.00	122.40	131.80
	KW	0.77	0.88	1.01	1.15	1.31	1.49	1.68	1.89
45 (7.22)	TCG	20.10	19.60	18.80	17.80	16.70	15.50	14.30	13.00
	SDT	66.10	75.80	85.40	94.90	104.30	113.70	123.10	132.40
	KW	0.76	0.87	0.99	1.14	1.30	1.47	1.67	1.89
50 (10.0)	TCG	22.20	21.60	20.70	19.70	18.50	17.20	15.90	14.50
	SDT	67.10	76.70	86.10	95.70	105.00	114.40	123.70	133.10
	KW	0.75	0.85	0.98	1.12	1.28	1.46	1.66	1.88
55 (12.78)	TCG	24.50	23.70	22.70	21.60	20.30	19.00	17.50	16.10
	SDT	68.10	77.60	87.10	96.50	105.80	115.10	124.40	133.70
	KW	0.73	0.83	0.96	1.10	1.26	1.45	1.65	1.88
60 (15.56)	TCG	26.90	26.00	24.90	23.60	22.20	20.80	19.30	17.70
	SDT	69.10	78.60	88.00	97.30	106.60	115.90	125.10	134.40
	KW	0.71	0.81	0.93	1.08	1.24	1.43	1.64	1.87
24ACB736A*031 – High									
30 (–1.11)	TCG	31.90	30.70	29.40	28.00	26.50	24.90	23.00	20.90
	SDT	71.60	81.10	90.60	100.20	109.60	119.10	128.40	137.70
	KW	1.61	1.77	1.97	2.19	2.45	2.74	3.06	3.42
35 (1.67)	TCG	35.30	34.00	32.60	31.10	29.50	27.60	25.60	23.30
	SDT	73.10	82.50	92.00	101.40	110.80	120.20	129.50	138.70
	KW	1.65	1.81	2.00	2.22	2.48	2.77	3.10	3.46
40 (4.44)	TCG	38.90	37.50	36.00	34.40	32.60	30.60	28.40	26.00
	SDT	74.70	84.00	93.40	102.80	112.20	121.40	130.60	139.80
	KW	1.69	1.85	2.03	2.25	2.51	2.80	3.13	3.50
45 (7.22)	TCG	42.70	41.20	39.60	37.90	36.00	33.80	31.40	28.80
	SDT	76.30	85.60	94.90	104.20	113.50	122.70	131.80	140.80
	KW	1.74	1.89	2.07	2.29	2.54	2.83	3.16	3.53
50 (10.0)	TCG	46.70	45.10	43.40	41.60	39.50	37.20	34.60	31.80
	SDT	77.90	87.20	96.50	105.70	114.90	124.00	133.00	141.90
	KW	1.80	1.93	2.11	2.32	2.57	2.87	3.20	3.57
55 (12.78)	TCG	50.90	49.30	47.50	45.50	43.30	40.80	38.00	35.00
	SDT	79.70	88.90	98.10	107.20	116.30	125.30	134.20	143.10
	KW	1.85	1.98	2.15	2.36	2.61	2.90	3.23	3.60
60 (15.56)	TCG	55.40	53.60	51.70	49.60	47.20	44.60	41.60	38.40
	SDT	81.50	90.60	99.70	108.80	117.80	126.70	135.50	144.20
	KW	1.92	2.04	2.20	2.40	2.65	2.94	3.27	3.64

See notes on page 19

CONDENSER ONLY RATINGS* CONTINUED

SST °F (°C)		CONDENSER ENTERING AIR TEMPERATURES °F (°C)							
		55 (12.78)	65 (18.33)	75 (23.89)	85 (29.44)	95 (35.0)	105 (40.56)	115 (46.11)	125 (51.67)
24ACB736A*031 – Low									
30 (–1.11)	TCG	21.70	20.80	19.90	19.00	17.90	16.70	15.20	13.60
	SDT	64.40	74.10	83.70	93.30	102.90	112.50	121.90	131.40
	KW	1.44	1.49	1.54	1.59	1.63	1.66	1.67	1.66
35 (1.67)	TCG	24.20	23.20	22.20	21.20	20.00	18.70	17.20	15.40
	SDT	65.40	74.90	84.50	94.10	103.70	113.20	122.60	132.00
	KW	1.41	1.47	1.53	1.58	1.62	1.65	1.66	1.65
40 (4.44)	TCG	27.00	25.90	24.70	23.60	22.30	20.90	19.20	17.40
	SDT	66.30	75.80	85.40	95.00	104.50	114.00	123.30	132.70
	KW	1.38	1.45	1.51	1.56	1.60	1.64	1.65	1.64
45 (7.22)	TCG	29.90	28.70	27.40	26.10	24.80	23.20	21.50	19.50
	SDT	67.40	76.80	86.40	95.90	105.40	114.70	124.10	133.40
	KW	1.34	1.42	1.49	1.54	1.59	1.62	1.64	1.62
50 (10.0)	TCG	33.10	31.70	30.30	28.90	27.40	25.70	23.80	21.70
	SDT	68.50	77.90	87.40	96.80	106.30	115.60	124.90	134.10
	KW	1.31	1.39	1.47	1.53	1.58	1.61	1.62	1.61
55 (12.78)	TCG	36.40	34.90	33.40	31.80	30.10	28.30	26.20	24.00
	SDT	69.70	79.00	88.50	97.80	107.20	116.50	125.70	134.80
	KW	1.26	1.36	1.44	1.51	1.56	1.60	1.61	1.60
60 (15.56)	TCG	40.00	38.30	36.60	34.90	33.00	31.00	28.80	26.30
	SDT	70.90	80.20	89.50	98.90	108.20	117.40	126.50	135.60
	KW	1.22	1.33	1.42	1.49	1.55	1.58	1.60	1.58
24ACB748A*031 – High									
30 (–1.11)	TCG	40.00	39.40	38.00	36.20	34.10	31.80	29.50	27.20
	SDT	71.70	81.50	91.20	100.70	110.10	119.60	129.20	139.00
	KW	2.03	2.28	2.54	2.83	3.16	3.54	3.99	4.52
35 (1.67)	TCG	44.60	43.70	42.20	40.20	38.00	35.50	33.10	30.70
	SDT	73.30	83.00	92.60	102.10	111.50	120.90	130.40	140.10
	KW	2.08	2.32	2.58	2.87	3.20	3.58	4.03	4.58
40 (4.44)	TCG	49.40	48.30	46.60	44.50	42.10	39.50	36.90	34.30
	SDT	75.00	84.60	94.10	103.50	112.80	122.20	131.70	141.30
	KW	2.12	2.36	2.62	2.91	3.24	3.63	4.09	4.63
45 (7.22)	TCG	54.40	53.10	51.30	48.90	46.40	43.60	40.90	38.20
	SDT	76.70	86.20	95.60	104.90	114.20	123.50	132.90	142.50
	KW	2.16	2.40	2.66	2.95	3.28	3.68	4.14	4.70
50 (10.0)	TCG	59.60	58.10	56.10	53.60	50.90	48.00	45.10	42.20
	SDT	78.40	87.80	97.10	106.30	115.60	124.80	134.20	143.60
	KW	2.19	2.43	2.69	2.99	3.33	3.73	4.20	4.76
55 (12.78)	TCG	64.90	63.30	61.00	58.40	55.50	52.50	49.50	46.40
	SDT	80.10	89.40	98.60	107.80	116.90	126.20	135.40	144.80
	KW	2.22	2.46	2.73	3.03	3.38	3.78	4.26	4.83
60 (15.56)	TCG	70.40	68.50	66.10	63.40	60.30	57.20	54.00	50.80
	SDT	81.80	91.00	100.20	109.20	118.30	127.50	136.60	145.90
	KW	2.25	2.49	2.76	3.06	3.42	3.84	4.33	4.90
24ACB748A*031 – Low									
30 (–1.11)	TCG	28.80	27.80	26.40	24.60	22.60	20.30	17.80	15.10
	SDT	66.70	76.50	86.20	95.80	105.30	114.70	124.20	133.60
	KW	1.47	1.67	1.90	2.15	2.43	2.75	3.11	3.52
35 (1.67)	TCG	32.00	30.90	29.40	27.60	25.40	0.00	20.40	17.60
	SDT	67.80	77.50	87.20	96.80	106.30	0.00	125.10	134.60
	KW	1.44	1.65	1.88	2.13	2.42	0.00	3.10	3.51
40 (4.44)	TCG	35.50	34.30	32.70	30.80	28.50	26.00	23.30	20.30
	SDT	68.90	78.70	88.30	97.90	107.30	116.80	126.10	135.60
	KW	1.41	1.63	1.86	2.12	2.40	2.73	3.09	3.50
45 (7.22)	TCG	39.20	38.00	36.30	34.30	31.90	29.30	26.40	23.20
	SDT	70.10	79.80	89.50	99.00	108.40	117.80	127.20	136.60
	KW	1.39	1.60	1.84	2.10	2.39	2.72	3.08	3.50
50 (10.0)	TCG	43.30	42.00	40.20	38.10	35.60	32.80	29.70	0.00
	SDT	71.50	81.10	90.70	100.20	109.60	118.90	128.30	0.00
	KW	1.36	1.58	1.82	2.09	2.38	2.70	3.07	0.00
55 (12.78)	TCG	47.70	46.30	44.40	42.20	39.60	36.60	33.40	30.00
	SDT	72.80	82.50	92.00	101.50	110.80	120.20	129.40	138.70
	KW	1.33	1.56	1.80	2.07	2.36	2.69	3.06	3.47
60 (15.56)	TCG	52.50	51.00	49.00	46.60	43.90	40.80	37.40	33.80
	SDT	74.30	83.90	93.40	102.80	112.10	121.40	130.60	139.90
	KW	1.30	1.53	1.78	2.05	2.35	2.68	3.05	3.46

See notes on page 19

CONDENSER ONLY RATINGS* CONTINUED

SST °F (°C)		CONDENSER ENTERING AIR TEMPERATURES °F (°C)							
		55 (12.78)	65 (18.33)	75 (23.89)	85 (29.44)	95 (35.0)	105 (40.56)	115 (46.11)	125 (51.67)
24ACB760AB032 – High									
30 (–1.11)	TCG	49.90	47.90	45.90	43.90	41.70	39.30	36.50	33.30
	SDT	72.70	81.80	91.10	100.50	109.90	119.20	128.50	137.70
	KW	2.48	2.75	3.06	3.41	3.81	4.27	4.78	5.36
35 (1.67)	TCG	55.00	52.80	50.70	48.60	46.20	43.60	40.60	37.10
	SDT	74.30	83.40	92.60	101.90	111.20	120.40	129.60	138.80
	KW	2.54	2.80	3.11	3.46	3.86	4.32	4.85	5.44
40 (4.44)	TCG	60.50	58.20	55.90	53.60	51.00	48.20	44.90	41.30
	SDT	76.00	85.00	94.20	103.40	112.60	121.70	130.80	139.90
	KW	2.60	2.86	3.16	3.51	3.92	4.38	4.91	5.51
45 (7.22)	TCG	66.40	63.90	61.50	59.00	56.20	53.10	49.60	45.70
	SDT	77.80	86.70	95.80	104.90	114.00	123.10	132.10	141.10
	KW	2.67	2.92	3.22	3.57	3.98	4.45	4.98	5.58
50 (10.0)	TCG	72.70	70.10	67.50	64.70	61.70	58.40	54.60	50.40
	SDT	79.70	88.60	97.50	106.50	115.50	124.50	133.40	142.20
	KW	2.75	2.99	3.29	3.64	4.05	4.52	5.05	5.66
55 (12.78)	TCG	79.60	76.70	73.90	70.80	67.60	64.00	59.90	55.40
	SDT	81.80	90.50	99.40	108.30	117.10	126.00	134.80	143.50
	KW	2.83	3.07	3.36	3.71	4.12	4.59	5.13	5.74
60 (15.56)	TCG	86.80	83.80	80.70	77.40	73.90	69.90	65.60	60.80
	SDT	84.00	92.60	101.30	110.00	118.80	127.50	136.10	144.70
	KW	2.91	3.15	3.44	3.79	4.20	4.67	5.21	5.82
24ACB760AB032 – Low									
30 (–1.11)	TCG	33.30	32.50	31.00	29.00	26.50	23.70	20.70	17.50
	SDT	66.60	76.30	85.90	95.30	104.70	113.90	123.10	132.30
	KW	1.73	1.97	2.23	2.53	2.87	3.24	3.66	4.13
35 (1.67)	TCG	37.30	36.30	34.70	32.50	29.90	27.00	23.90	20.50
	SDT	67.80	77.50	87.10	96.50	105.70	115.00	124.10	133.30
	KW	1.71	1.95	2.22	2.52	2.86	3.24	3.66	4.13
40 (4.44)	TCG	41.50	40.40	38.60	36.30	33.60	30.50	27.20	23.70
	SDT	69.20	78.80	88.30	97.60	106.90	116.00	125.10	134.30
	KW	1.68	1.93	2.20	2.51	2.85	3.23	3.66	4.13
45 (7.22)	TCG	46.10	44.70	42.80	40.40	37.50	34.30	30.80	27.10
	SDT	70.60	80.20	89.50	98.80	108.00	117.10	126.20	135.20
	KW	1.66	1.91	2.19	2.50	2.84	3.23	3.65	4.13
50 (10.0)	TCG	50.90	49.40	47.30	44.70	41.70	38.30	34.70	30.80
	SDT	72.10	81.50	90.80	100.00	109.20	118.20	127.20	136.30
	KW	1.63	1.89	2.17	2.48	2.83	3.21	3.64	4.12
55 (12.78)	TCG	56.10	54.30	52.10	49.30	46.10	42.50	38.70	34.70
	SDT	73.60	83.00	92.20	101.30	110.40	119.40	128.40	137.30
	KW	1.60	1.86	2.14	2.46	2.81	3.20	3.64	4.11
60 (15.56)	TCG	61.50	59.60	57.10	54.20	50.80	47.00	43.00	38.80
	SDT	75.20	84.40	93.60	102.60	111.70	120.60	129.50	138.40
	KW	1.57	1.83	2.12	2.44	2.79	3.19	3.62	4.10

* AHRI listing applies only to systems shown in Combination Ratings table.

KW – Outdoor Unit Kilowatts Only.

SDT – Saturated Temperature Leaving Compressor (°F)

SST – Saturated Temperature Entering Compressor (°F/°C)

TCG – Gross Cooling Capacity (1000 Btuh)

GUIDE SPECIFICATIONS
GENERAL

System Description

Outdoor-mounted, air-cooled, split-system air conditioner unit suitable for ground or rooftop installation. Unit consists of a hermetic compressor, an air-cooled coil, propeller-type condenser fan, and a control box. Unit will discharge supply air upward as shown on contract drawings. Unit will be used in a refrigeration circuit to match up to a packaged fan coil or coil unit.

Quality Assurance

— Unit will be rated in accordance with the latest edition of AHRI Standard 210.

— Unit will be certified for capacity and efficiency, and listed in the latest AHRI directory.

— Unit construction will comply with latest edition of ANSI/ ASHRAE and with NEC.

— Unit will be constructed in accordance with UL standards and will carry the UL label of approval. Unit will have c-UL approval.

— Unit cabinet will be capable of withstanding Federal Test Method Standard No. 141 (Method 6061) 500-hr salt spray test.

— Air-cooled condenser coils will be leak tested and pressure tested.

— Unit constructed in ISO9001 approved facility.

Delivery, Storage, and Handling

— Unit will be shipped as single package only and is stored and handled per unit manufacturer's recommendations.

Warranty (for inclusion by specifying engineer)

— U.S. and Canada only.

PRODUCTS

Equipment

— Factory assembled, single piece, air-cooled air conditioner unit. Contained within the unit enclosure is all factory wiring, piping, controls, compressor, refrigerant charge Puron® (R-410A), and special features required prior to field start-up.

Unit Cabinet

— Unit cabinet, including louvered coil guard, will be constructed of galvanized steel, bonderized, and coated with a powder coat paint.

Fans

— Condenser fan will be direct-drive propeller type, discharging air upward.

— Condenser fan motors will be totally enclosed, 1-phase type with class B insulation and permanently lubricated bearings. Shafts will be corrosion resistant.

— Fan blades will be statically and dynamically balanced.

— Condenser fan openings will be equipped with coated steel wire safety guards.

Compressor

— Compressor will be hermetically sealed.

— Compressor will be mounted on rubber vibration isolators.

Condenser Coil

— Condenser coil will be air cooled.

— Coil will be constructed of aluminum fins mechanically bonded to copper tubes which are then cleaned, dehydrated, and sealed.

Refrigeration Components

— Refrigeration circuit components will include liquid-line shutoff valve with sweat connections, vapor-line shutoff valve with sweat connections, system charge of Puron® (R-410A) refrigerant, and compressor oil.

— Unit will be equipped with high-pressure switch, low pressure switch and filter drier for Puron refrigerant.

Operating Characteristics

— The capacity of the unit will meet or exceed _____ Btuh at a suction temperature of _____ °F/°C. The power consumption at full load will not exceed _____ kW.

— Combination of the unit and the evaporator or fan coil unit will have a total net cooling capacity of _____ Btuh or greater at conditions of _____ CFM entering air temperature at the evaporator at _____ °F/°C wet bulb and _____ °F/°C dry bulb, and air entering the unit at _____ °F/°C.

— The system will have a SEER of _____ Btuh/watt or greater at DOE conditions.

Electrical Requirements

— Nominal unit electrical characteristics will be _____ v, single phase, 60 hz. The unit will be capable of satisfactory operation within voltage limits of _____ v to _____ v.

— Unit electrical power will be single point connection.

— Control circuit will be 24v.

Special Features

— Refer to section of this literature identifying accessories and descriptions for specific features and available enhancements.

SYSTEM DESIGN SUMMARY

1. Intended for outdoor installation with free air inlet and outlet. Outdoor fan external static pressure available is less than 0.01-in. wc.
2. Minimum outdoor operating air temperature without low-ambient operation accessory is 55°F (12.8°C).
3. The maximum outdoor operating ambient in cooling mode is 125°F (51.67°C) when operating voltage is 230v. For 208v applications, the maximum outdoor ambient is 120°F (48.9°C).
4. Minimum outdoor operating air temperature for heating mode is –20°F (–28.9°C).
5. Maximum outdoor operating air temperature for heating mode is 66°F (18.9°C).
6. For reliable operation, unit should be level in all horizontal planes.
7. For interconnecting refrigerant tube lengths greater than 80 ft (23.4 m) and/or elevation differences between indoor and outdoor units greater than 20 ft (6.1 m), consult Residential Piping and Longline Guideline and Service Manual available from equipment distributor.
8. If any refrigerant tubing is buried, provide a 6 in. (152.4 mm) vertical rise to the valve connections at the unit. Refrigerant tubing lengths up to 36 in. (914.4 mm) may be buried without further consideration. Do not bury refrigerant lines longer than 36 in. (914.4 mm).
9. Use only copper wire for electric connection at unit. Aluminum and clad aluminum are not acceptable for the type of connector provided.
10. Do not apply capillary tube indoor coils to these units.
11. Factory-supplied filter drier must be installed.

Copyright 2017 Carrier Corp. • 7310 W. Morris St. • Indianapolis, IN 46231

Edition Date: 05/17

Catalog No. 24ACB7–8PD

Manufacturer reserves the right to change, at any time, specifications and designs without notice and without obligations.

Replaces: 24ACB7–7PD