25HNB5
Infinity® 15 Heat Pump with Puron® Refrigerant
1–1/2 to 5 Nominal Tons (Sizes 18–60)

Carrier
turn to the experts™

Product Data

INFINITY™ SYSTEM

Carrier's heat pumps with Puron® refrigerant provide a collection of features unmatched by any other family of equipment. The 25HNB5 has been designed utilizing Carrier's Puron® refrigerant. The environmentally sound refrigerant allows consumers to make a responsible decision in the protection of the earth's ozone layer.

This product has been designed and manufactured to meet Energy Star® criteria for energy efficiency when matched with appropriate coil components. Refer to the combination ratings in the Product Data for system combinations that meet Energy Star® guidelines.

NOTE: Ratings contained in this document are subject to change at any time. Always refer to the AHRI directory (www.ahridirectory.org) for the most up-to-date ratings information.

INDUSTRY LEADING FEATURES / BENEFITS

Efficiency

- 15.3 SEER (nominal) / 11.0- 13.0 EER / 7.7 - 8.0 HSPF
- Microtube Technology™ refrigeration system
- Indoor air quality accessories available

Sound

- Sound level as low as 68 dBA
- Compressor sound blanket standard
- Quiet shift defrost

Comfort

- System supports Infinity Control or standard thermostat controls

Reliability

- Puron® refrigerant - environmentally sound, won't deplete the ozone layer and low lifetime servce cost.
- Scroll compressor
- Internal pressure relief valve
- Internal thermal overload
- Filter drier
- High pressure switches
- Loss-of-charge switch
- Balanced refrigeration system for maximum reliability

Durability

WeatherArmor™ protection package:

- Solid, durable sheet metal construction
- Louvered coil guard
- Baked-on, complete outer coverage, powder paint

Applications

- Long-line - up to 250 feet (76.20 m) total equivalent length, up to 200 feet (60.96 m) condenser above evaporator, or up to 80 ft. (24.38 m) evaporator above condenser (See Longline Guide for more information.)
- Low ambient (down to -20°F/-28.9°C)) with accessory kit

MODEL NUMBER NOMENCLATURE

1	2	3	4	5	6	7	8	9	10	11	12	13
N	N	A	A	A/N	N	N	N	A/N	A/N	A/N	N	N
2	5	H	N	B	5	3	6	A	0	0	3	0
Product Series		Product Family	Tier	Major Series	SEER	Cooling Capacity		Variations	Open	Open	Voltage	Minor Series
25 = HP		H = RES HP	n= infinity Series	B= Puron	5=15 SEER			A = Standard	0=Not Defined	0=Not Defined	3=208/230–1	0, 1, 2...

Puron™ the environmentally sound refrigerant

AHRI CERTIFIED™ www.ahridirectory.org

Use of the AHRI Certified TM Mark indicates a manufacturer's participation in the program For verification of certification for individual products, go to www.ahridirectory.org.

c UL US

ENERGY STAR

This product has been designed and manufactured to meet Energy Star criteria for energy efficiency when matched with appropriate coil components. However, proper refrigerant charge and proper air flow are critical to achieve rated capacity and efficiency. Installation of this product should follow all manufacturing refrigerant charging and air flow instructions. **Failure to confirm proper charge and air flow may reduce energy efficiency and shorten equipment life.**

Thinks. Heats. Saves. HYBRIDHEAT™ Ready for use in a Hybrid Heat® Duel Fuel system.

Certified System™

ISO 9001 QMI-SAI Global

Perfect Humidity™

25HNB5

STANDARD FEATURES

Feature	018	024	030	036	042	048	060
Puron® Refrigerant	X	X	X	X	X	X	X
Maximum SEER Rating*	15.5	16.0	15.5	15.5	16.0	15.5	15.0
Scroll Compressor	X	X	X	X	X	X	X
Louvered Coil Guard	X	X	X	X	X	X	X
Field–Installed Filter Drier	X	X	X	X	X	X	X
Compressor Sound Blanket	X	X	X	X	X	X	X
Front–Seating Service Valves	X	X	X	X	X	X	X
Internal Pressure–Relief Valve	X	X	X	X	X	X	X
Internal Thermal Overload	X	X	X	X	X	X	X
Long Line capability	X	X	X	X	X	X	X
Low–ambient capability with Kit or Infinity™ Control	X	X	X	X	X	X	X
Suction Line Accumulator	X	X	X	X	X	X	X
High–Pressure Switch	X	X	X	X	X	X	X
Loss–of–Charge Switch	X	X	X	X	X	X	X

*With approved combinations

X = Standard

PHYSICAL DATA

UNIT SIZE SERIES	18–30	24–30	30–30	36–30	42–30	48–30	60–30
Operating Weight lb (Kg)	192 (87)	222 (101)	235 (107)	236 (107)	271 (123)	287 (130)	323 (147)
Shipping Weight lb (Kg)	226 (103)	264 (120)	278 (126)	279 (126)	311 (141)	338 (153)	368 (167)
Compressor Type	Scroll						
REFRIGERANT	R–410A						
Control	TXV (R–410A Hard Shutoff)						
Charge lb (Kg)	5.6 (2.54)	7.6 (3.45)	8.25 (3.74)	7.4 (3.36)	8.9 (4.04)	9.6 (4.35)	12.5 (5.67)
Outdoor Heating Piston Number	42	46	57	61	61	67	76
COND FAN	Propeller Type, Direct Drive						
Air Discharge	Vertical						
Air Qty (CFM)	2233	3223	3223	3810	3810	4046	4046
Motor HP	1/12	1/12	1/8	1/5	1/5	1/4	1/4
Motor RPM	800	800	800	800	800	800	800
COND COIL							
Face Area (Sq ft)	15.07	20.09	22.61	22.61	17.58	20.10	25.12
Fins per In.	20	20	20	20	20	20	20
Rows	1	1	1	1	2	2	2
Circuits	4	5	6	6	7	7	9
VALVE CONNECT. (In. ID)							
Vapor	5/8	5/8	3/4	3/4	7/8	7/8	7/8
Liquid	3/8						
REFRIGERANT TUBES (In. OD)							
Rated Vapor*	5/8	5/8	3/4	3/4	7/8	7/8	1–1/8
Liquid	3/8”						

*Units are rated with 25 ft (7.6 m) of lineset length. See *Vapor Line Sizing and Cooling Capacity Loss* table when using other sizes and lengths of lineset.

Note: See unit Installation Instruction for proper installation.

VAPOR LINE SIZING AND COOLING CAPACITY LOSS

Acceptable vapor line diameters provide adequate oil return to the compressor while avoiding excessive capacity loss. The suction line diameters shown in the chart below are acceptable for HP systems with Puron refrigerant:

Vapor Line Sizing and Cooling Capacity Losses - Puron® Refrigerant 1- Stage Heat Pump Applications

Unit Nominal Size (Btuh)	Maximum Liquid Line Diameters (In. OD)	Vapor Line Diameters (In.) OD	Cooling Capacity Loss (%) Total Equivalent Line Length ft. (m)								
			Standard Application		Long Line Application Requires Accessories						
			26–50 (7.9–15.2)	51–80 (15.5–24.4)	81–100 (24.7–30.5)	101–125 (30.8–38.1)	126–150 (38.4–45.7)	151–175 (46.0–50.3)	176–200 (53.6–60.0)	201–225 (61.3–68.6)	226–250 (68.9–76.2)
18,000 1–Stage HP with Puron	3/8	1/2	1	2	3	4	6	7	8	9	10
		5/8	0	0	1	1	1	2	2	3	3
24,000 1–Stage HP with Puron	3/8	5/8	0	1	1	2	3	3	4	4	5
		3/4	0	0	0	0	1	1	1	1	1
30,000 1–Stage HP with Puron	3/8	5/8	1	2	3	3	4	5	6	7	8
		3/4	0	0	1	1	1	2	2	2	3
		7/8	0	0	0	0	1	1	1	1	1
36,000 1–Stage HP with Puron	3/8	5/8	1	2	4	5	6	7	9	10	11
		3/4	0	0	1	1	2	2	3	3	4
		7/8	0	0	0	0	1	1	1	1	2
42,000 1–Stage HP with Puron	3/8	3/4	0	1	2	2	3	4	4	5	6
		7/8	0	0	1	1	1	2	2	2	3
48,000 1–Stage HP with Puron	3/8	3/4	0	1	2	3	4	5	5	6	7
		7/8	0	0	1	1	2	2	2	3	3
60,000 1–Stage HP with Puron	3/8	3/4	1	2	4	5	6	7	9	10	11
		7/8	0	1	2	2	3	4	4	5	5
		1–1/8	0	0	0	1	1	1	1	1	1

Standard Length = 80 ft. (24.4 m) or less total equivalent length

Applications in this area are long line. Accessories are required as shown recommended on Long Line Application Guidelines

Applications in this area may have height restrictions that limit allowable total equivalent length, when outdoor unit is below indoor unit See Long Line Application Guidelines

REFRIGERANT PIPING LENGTH LIMITATIONS

Maximum Line Lengths:

The maximum allowable total equivalent length for heat pumps varies depending on the vertical separation. See the tables below for allowable lengths depending on whether the outdoor unit is on the same level, above or below the outdoor unit.

Maximum Line Lengths for Heat Pump Applications

	MAXIMUM ACTUAL LENGTH ft (m)	MAXIMUM EQUIVALENT LENGTH† ft (m)	MAXIMUM VERTICAL SEPARATION ft (m)
Units on equal level	200 (61)	250 (76.2)	N/A
Outdoor unit ABOVE indoor unit	200 (61)	250 (76.2)	200 (61)
Outdoor unit BELOW indoor unit	See Table *'Maximum Total Equivalent Length: Outdoor Unit BELOW Indoor Unit'*		

† Total equivalent length accounts for losses due to elbows or fitting. See the Long Line Guideline for details.

25HNB5

Maximum Total Equivalent Length† - Outdoor Unit BELOW Indoor Unit

Size	Liquid Line Diameter w/ TXV	HP with Puron® Refrigerant – Maximum Total Equivalent Length† Vertical Separation ft (m) Outdoor unit BELOW indoor unit;						
		0–20 (0 – 6.1)	21–30 (6.4 – 9.1)	31–40 (9.4 – 12.2)	41–50 (12.5 – 15.2)	51–60 (15.5 – 18.3)	61–70 (18.6 – 21.3)	71–80 (21.6 – 24.4)
018 HP with Puron	3/8	250*	250*	250*	250*	250*	250*	250*
024 HP with Puron	3/8	250*	250*	250*	250*	250*	250*	250*
030 HP with Puron	3/8	250*	250*	250*	250*	250*	250*	250*
036 HP with Puron	3/8	250*	250*	250*	250*	250*	250*	250*
042 HP with Puron	3/8	250*	250*	250*	250*	250*	250*	150
048 HP with Puron	3/8	250*	250*	250*	250*	230	160	– –
060 HP with Puron	3/8	250*	225*	190	150	110	– –	– –

*** Maximum actual length not to exceed 200 ft (61 m)**

† Total equivalent length accounts for losses due to elbows or fitting. See the Long Line Guideline for details.

– – = outside acceptable range

LONG LINE APPLICATIONS

An application is considered Long Line when the refrigerant level in the system requires the use of accessories to maintain acceptable refrigerant management for systems reliability. Defining a system as long line depends on the liquid line diameter, actual length of the tubing, and vertical separation between the indoor and outdoor units.

For Heat Pump systems, the chart below shows when an application is considered Long Line. Beyond these lengths, long line accessories are required:

HP WITH PURON® REFRIGERANT LONG LINE DESCRIPTION ft (m)
Beyond these lengths, long line accessories are required

Liquid Line Size	Units On Same Level	Outdoor Below Indoor	Outdoor Above Indoor
3/8	80 (24.4)	20 (6.1) vertical or 80 (24.4) total	80 (24.4)

Note: See Long Line Guideline for details

ACCESSORIES

KIT NUMBER	KIT NAME	UNIT SIZE – SERIES						
		18–30	24–30	30–30	36–30	42–30	48–30	60–30
KAACH1701AAA	CRANKCASE HEATER	X	X	X	X			
KAACH1601AAA	CRANKCASE HEATER					X	S	S
KAACS0201PTC	PTC START ASSIST	X	X	X	X	X	X	X
KAAFT0101AAA	FREEZE THERMOSTAT	X	X	X	X	X	X	X
KAATD0101TDR	TIME DELAY RELAY	X	X	X	X	X	X	X
KHALS0401LLS	SOLENOID VALVE	X	X	X	X	X	X	X
KHAOT0201SEC	OUTDOOR THERMOSTAT	X	X	X	X	X	X	X
KHAOT0301FST	OUTDOOR THERMOSTAT	X	X	X	X	X	X	X
KHASS0606MPK*	SNOW STAND	X	X	X	X	X	X	X
KSAHS2701AAA	HARD START (CAP/RELAY)	X	X	X	X	X	X	X
KSALA0301410	LOW–AMBIENT SWITCH	X	X	X	X	X	X	X
KSASF0101AAA	SUPPORT FEET	X	X	X	X	X	X	X
KSATX0201PUR	TXV (HSO)	X	X	X				
KSATX0301PUR	TXV (HSO)				X			
KSATX0401PUR	TXV (HSO)					X		
KSATX0501PUR	TXV (HSO)						X	X

x = Accessory S = Standard

* Order through RCD–Totaline, part number KHASS0706MPK (qty 6).

ACCESSORY THERMOSTATS & CONTROLS

PART NUMBER	PROGRAM	GAS	ELECTRIC	HEAT PUMP	HYBRID HEAT	HEAT	COOL
Performance							
TP–PRH01–A	7–Day	√	√	√	√	3	2
TP–PHP01	7–Day		√	√		3	2
TP–PAC01	7–Day	√	√			1	1
TP–NRH01–A	NP	√	√	√	√	3	2
TP–NHP01	NP		√	√		3	2
TP–NAC01	NP	√	√			1	1
Comfort							
TC–PHP01	5–2 Day		√	√		3	2
TC–PAC01	5–2 Day	√	√			1	1
TC–NHP01	NP		√	√		3	2
TC–NAC01	NP	√	√			1	1
TCSNHP01	NP		√	√		2	1
TCSNAC01	NP	√	√			1	1
Base							
TB–PHP01	5–2 Day	√	√	√		2	1
TB–PAC01	5–2 Day		√			1	1
TB–NHP01	NP	√	√	√		2	1
TB–NAC01	NP					1	1

THERMOSTAT ACCESSORIES		
PART NUMBER	**BRIEF DESCRIPTION**	**THERMOSTATS USED WITH**
SYSTXCCRRS01	Indoor Remote Room Temperature Sensor	All TP– thermostats
TP–EXP01–A	ExP® Computer Programming Accessory	TP–P thermostats
TSTATXXCNV10**	Thermostat Conversion Kit (4 to 5 wire) – 10 pack	All Carrier® branded thermostats
TX–LBP01	Large Decorative Backplate	TP–Pxx, TP–Nxx, TC–Pxx
TX–MBP01	Medium Decorative Backplate	TC–Nxx, TB–Pxx
TX–SBP01	Small Decorative Backplate	TB–Nxx
TSTATXXSEN01–B*	Outdoor Air Temperature Sensor	All TP– thermostats

* Outdoor temperature sensor is an accessory for all Carrier electronic thermostats, except the non–programmable air conditioner version and builder;s thermostats. It allows the temperature at a remote location (outdoors) to be displayed on the thermostat. The outdoor air temperature sensor must be used with the HybridHeat™ (dual fuel) thermostat. The outdoor air temperature sensor is included with the Thermidistat Control and HybridHeat™ (dual fuel) thermostat.

88 Thermostat conversion kit is a 24–vac accessory that can turn a 4–wire thermostat application into a 5–wire application. This kit can also be used to replace a broken thermostat wire, or add an extra wire when needed.

CONTROLS	
PART NO.	**DESCRIPTION**
SYSTXCCUID01-B	Infinity Control Deluxe 7-Day Programmable (Wall-mounted system control.)
SYSTXCCUIZ01-B	Infinity Control Deluxe Zoning 7-Day Programmable (Wall-mounted control for a multi-zone system.)
SYSTXCC4ZC01	Infinity 4-Zone Damper Control Module (Wall-mounted control for a four-zone system.)
SYSTXCCSMS01	Infinity Smart Sensor (Optional wall control used to monitor temperature and/or fan control in an individual zone.)
SYSTXCCRRS01	Infinity Remote Room Sensor (Monitors temperature in an individual zone.)
SYSTXCCRCT01 or SYSTXCCRWF01	Infinity System Access Module (Hardware for wireless access and control via internet.)
SYSTXCCNIM01	Infinity Network Interface Module (Connects Heat Recovery and Energy Recovery Ventilators on Non-zoning applications.)
SYSTXXXBPU01	Decorative Back Plate for Infinity Control (Decorative wall plate.)

ACCESSORY USAGE GUIDELINE

Accessory	REQUIRED FOR LONG LINE APPLICATIONS*	REQUIRED FOR SEA COAST APPLICATIONS (Within 2 miles / 3.22 km)
Accumulator	Standard	Standard
Ball Bearing Fan Motor	Standard	Standard
Compressor Start Assist Capacitor and Relay	Yes	No
Crankcase Heater	Yes	No
Evaporator Freeze Thermostat	No	No
Hard Shutoff TXV	Yes	Yes
Isolation Relay	No	No
Liquid Line Solenoid Valve	See Long–Line Application Guideline	No
Low Ambient Switch	No	No
Support Feet	No	Recommended

* For tubing line sets between 80 and 200 ft. (24.38 and 60.96 m) and/or 20 ft. (6.09 m) vertical differential, refer to Residential Piping and Longline Guideline.

Accessory Description and Usage (Listed Alphabetically)

1. Compressor Start Assist - Capacitor and Relay

Start capacitor and relay gives a ”hard” boost to compressor motor at each start up.

Usage Guideline:

Required for reciprocating compressors in the following applications:

Long line

Low ambient cooling

Hard shut off expansion valve on indoor coil

Liquid line solenoid on indoor coil

Required for single-phase scroll compressors in the following applications:

Long line

Low ambient cooling

Suggested for all compressors in areas with a history of low voltage problems.

2. Compressor Start Assist — PTC Type

Solid state electrical device which gives a ”soft” boost to the compressor at each start-up.

Usage Guideline:

Suggested in installations with marginal power supply.

3. Crankcase Heater

An electric resistance heater which mounts to the base of the compressor to keep the lubricant warm during off cycles. Improves compressor lubrication on restart and minimizes the chance of liquid slugging.

Usage Guideline:

Required in low ambient cooling applications.

Required in long line applications.

Suggested in all commercial applications.

4. Evaporator Freeze Thermostat

An SPST temperature-actuated switch that stops unit operation when evaporator reaches freeze-up conditions.

Usage Guideline:

Required when low ambient kit has been added.

5. Isolation Relay

An SPDT relay which switches the low-ambient controller out of the outdoor fan motor circuit when the heat pump switches to heating mode.

Usage Guideline:

Required in all heat pumps where low ambient kit has been added.

6. Liquid-Line Solenoid Valve (LLS)

An electrically operated shutoff valve which stops and starts refrigerant liquid flow in response to compressor operation. It is to be installed at the outdoor unit to control refrigerant off cycle migration in the heating mode.

Usage Guideline:

An LLS is required in all long line heat pump applications to control refrigerant off cycle migration in the heating mode. See Long Line Guideline.

7. Low-Ambient Pressure Switch Kit

A long life pressure switch which is mounted to outdoor unit service valve. It is designed to cycle the outdoor fan motor in order to maintain head pressure within normal operating limits. The control will maintain working head pressure at low-ambient temperatures down to 0°F (-17.8°C) when properly installed.

Usage Guideline:

A Low-Ambient Pressure Switch or MotorMaster® Low-Ambient Controller must be used when cooling operation is used at outdoor temperatures below 55°F (12.8°C).

8. Outdoor Air Temperature Sensor

Designed for use with Carrier Thermostats listed in this publication. This device enables the thermostat to display the outdoor temperature. This device also is required to enable special thermostat features such as auxiliary heat lock out.

Usage Guideline:

Suggested for all Carrier thermostats listed in this publication.

9. Outdoor Thermostat

An SPDT temperature-actuated switch which turns on supplemental electric heaters when outdoor air temperature drops below a user-selected set point.

Usage Guideline:

Electric supplemental heat applications in non-variable speed indoor units when electric heat staging is desired.

10. Secondary Outdoor Thermostat

An SPDT temperature-actuated switch which turns on third-stage of supplemental electric heaters when outdoor air temperature drops below the second-stage set point.

Usage Guideline:

Outdoor thermostat applications where electric heater is capable of 3-stage operation.

11. Snow Stand

Coated wire rack which supports unit 18 in. (457.2 mm) above mounting pad to allow for drainage from unit base.

Usage Guideline:

Suggested in the following applications:

Heat pump installations in heavy snowfall areas.

Heat pump installations in snow drift locations.

Heat pump installations in areas of prolonged subfreezing temperatures.

All commercial installations.

Note: Snow stand does not support 26” X 26” (660 X 660 mm) small basepan size.

12. Thermostatic Expansion Valve (TXV) Bi-Flow

A modulating flow-control valve which meters refrigerant liquid flow rate into the evaporator in response to the superheat of the refrigerant gas leaving the evaporator.

Usage Guideline:

Accessory required to meet AHRI rating and system reliability, where indoor not equipped.

Required in all heat pump applications designed with Puron refrigerant.

13. Time-Delay Relay

An SPST delay relay which briefly continues operation of indoor blower motor to provide additional cooling after the compressor cycles off.

Note: Most indoor unit controls include this feature. For those that do not, use the guideline below.

Usage Guideline:

Accessory required to meet AHRI rating, where indoor not equipped.

ELECTRICAL DATA

UNIT SIZE – SERIES	V/PH	OPER VOLTS*		COMPR		FAN	MCA	MIN WIRE SIZE†	MIN WIRE SIZE†	MAX LENGTH ft (m)‡	MAX LENGTH ft (m)‡	MAX FUSE** or CKT BRK AMPS
		MAX	MIN	LRA	RLA	FLA		60° C	75° C	60° C	75° C	
18–30	208/230/1	253	197	48.0	9.0	0.5	11.8	14	14	66 (20.1)	62 (20.7)	20
24–30				58.3	12.8	0.5	16.5	14	14	46 (14.0)	44 (13.4)	25
30–30				73.0	14.1	0.9	18.5	14	14	41 (12.4)	39 (11.8)	30
36–30				79.0	16.7	1.2	22.1	12	12	57 (17.4)	54 (16.5)	35
42–30				109.0	21.1	1.2	27.6	10	10	71 (21.6)	68 (20.7)	40
48–30				117.0	21.8	1.2	28.5	10	10	69 (21.0)	66 (20.1)	40
60–30				134.0	26.4	1.2	34.2	8	10	91 (27.7)	56 (17.1)	50

* Permissible limits of the voltage range at which the unit will operate satisfactorily

† If wire is applied at ambient greater than 30°C, consult table 310–16 of the NEC (NFPA 70). The ampacity of non–metallic–sheathed cable (NM), trade name ROMEX, shall be that of 60°C conditions, per the NEC (NFPA 70) Article 336–26. If other than uncoated (no–plated), 60 or 75°C insulation, copper wire (solid wire for 10 AWG or smaller, stranded wire for larger than 10 AWG) is used, consult applicable tables of the NEC (NFPA 70).

‡ Length shown is as measured 1 way along wire path between unit and service panel for voltage drop not to exceed 2%.

** Time–Delay fuse.

FLA – Full Load Amps

LRA – Locked Rotor Amps

MCA – Minimum Circuit Amps

RLA – Rated Load Amps

NOTE: Control circuit is 24–V on all units and requires external power source. Copper wire must be used from service disconnect to unit.
All motors/compressors contain internal overload protection.
Complies with 2007 requirements of ASHRAE Standards 90.1

A-WEIGHTED SOUND LEVEL (dBA)

UNIT SIZE – SERIES	STANDARD RATING dBA	TYPICAL OCTAVE BAND SPECTRUM (Dba, without tone adjustment)						
		125	250	500	1000	2000	4000	8000
18–30	68	56.0	58.0	62.0	63.0	60.0	54.5	45.0
24–30	68	52.5	56.5	60.5	61.5	61.5	57.0	49.0
30–30	70	55.5	60.0	62.5	64.0	61.5	58.0	49.0
36–30	70	53.5	59.5	62.0	65.0	62.0	58.5	52.5
37–30	69	55.0	60.5	63.0	63.5	60.5	57.0	49.0
42–30	73	59.5	64.5	65.5	67.5	63.5	58.0	53.0
48–30	73	57.5	64.5	67.0	67.5	61.5	57.0	50.5
60–30	70	56.5	62.0	64.5	64.0	60.5	58.5	51.5

NOTE: Tested in accordance with AHRI Standard 270–08 (not listed in AHRI).

CHARGING SUBCOOLING (TXV-TYPE EXPANSION DEVICE)

UNIT SIZE–SERIES	REQUIRED SUBCOOLING °F (°C)
18–30	12 (6.7)
24–30	14 (7.8)
30–30	10 (5.6)
36–30	10 (5.6)
42–30	10 (5.6)
48–30	13 (7.2)
60–30	11 (6.1)

DIMENSIONS - ENGLISH

UNIT	SERIES	ELECTRICAL CHARACTERISTICS				A	B	C	D	E	F	G	K	L	M	N	P	OPERATING WEIGHT (lbs)	SHIPPING WEIGHT (lbs)	SHIPPING DIMENSIONS (L x W x H)
25HNB518	0	X	O	O	O	31 3/16"	29 9/16"	3 3/4"	5/8"	6 9/16"	24 11/16"	9 1/8"	2 13/16"	1/2"	15 1/4"	16 1/4"	13"	192	226	32 5/16" X 35 1/2" X 35 15/16"
25HNB524	0	X	O	O	O	35"	33 7/8"	3 3/4"	5/8"	6 9/16"	28 7/16"	9 1/8"	2 13/16"	1/2"	17 1/4"	17 1/2"	16 1/4"	222	264	36 1/8" X 39 1/4" X 39 3/8"
25HNB530	0	X	O	O	O	35"	37 1/4"	3 3/4"	3/4"	6 9/16"	28 7/16"	9 1/8"	2 13/16"	1/2"	17 1/4"	17 1/2"	17 1/2"	235	278	36 1/8" X 39 1/4" X 42 3/4"
25HNB536	0	X	O	O	O	35"	37 1/4"	3 3/4"	3/4"	6 9/16"	28 7/16"	9 1/8"	2 13/16"	1/2"	17 1/4"	16 3/4"	16 3/4"	236	279	36 1/8" X 39 1/4" X 42 3/4"
25HNB542	0	X	O	O	O	35"	30 7/16"	3 7/8"	7/8"	6 9/16"	28 7/16"	9 1/8"	2 15/16"	5/8"	17 5/8"	16 1/4"	14"	271	311	36 1/8" X 39 1/4" X 35 15/16"
25HNB548	0	X	O	O	O	35"	33 7/8"	3 7/8"	7/8"	6 9/16"	28 7/16"	9 1/8"	2 15/16"	5/8"	17 5/8"	16"	16"	287	338	36 1/8" X 39 1/4" X 39 3/8"
25HNB560	0	X	O	O	O	35"	40 5/8"	3 7/8"	7/8"	6 9/16"	28 7/16"	9 1/8"	2 15/16"	5/8"	17 1/4"	17 1/2"	17 1/2"	323	368	36 1/8" X 39 1/4" X 46 1/8"
		208-230-1-60	230-1-60	208/230-3-60	460-3-60															

X = YES
O = NO

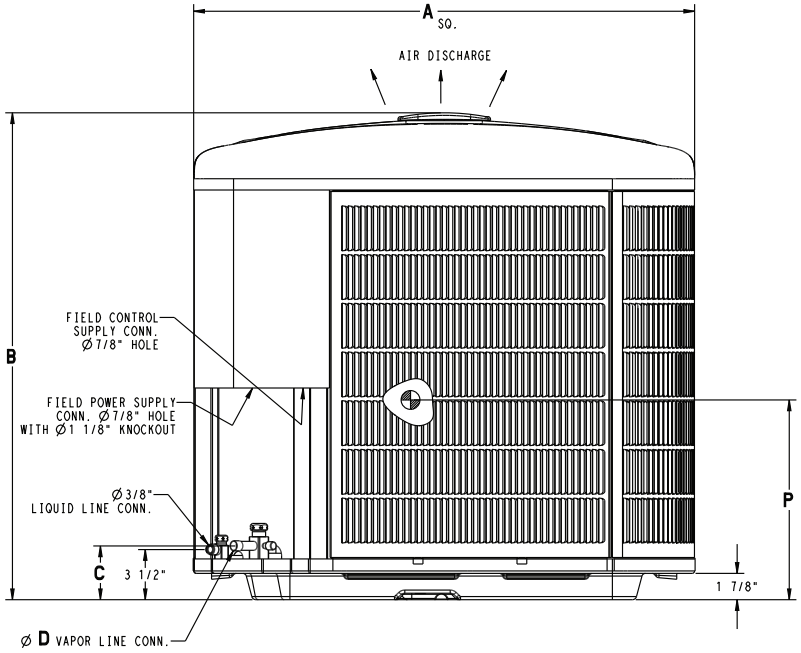

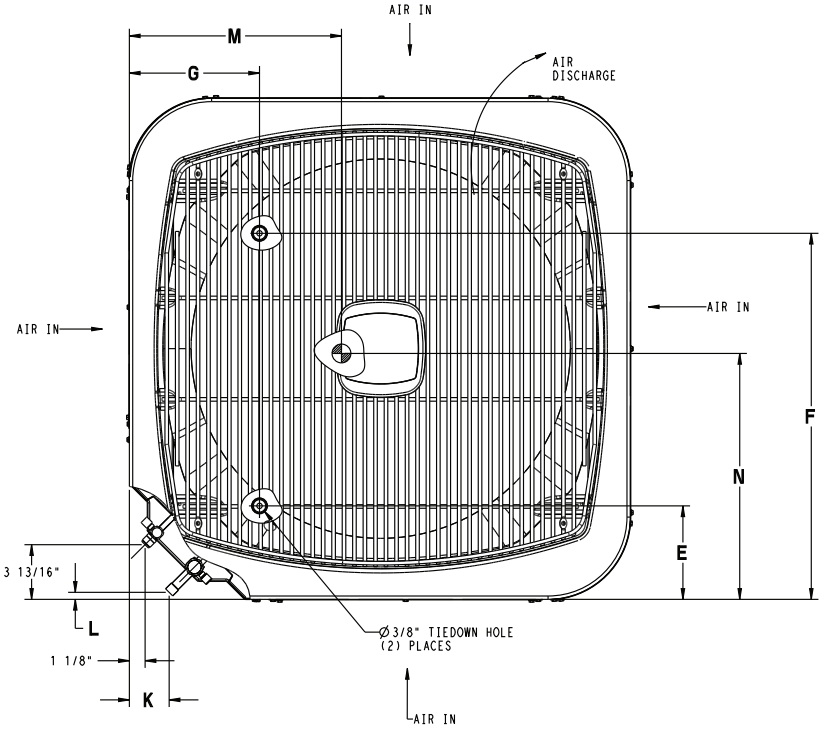

UNIT SIZE	MINIMUM MOUNTING PAD DIMENSIONS
-	26" X 26"
18	31 1/2" X 31 1/2"
24,30,36 42,48,60	35" X 35"

DIMENSIONS - SI

UNIT	SERIES	ELECTRICAL CHARACTERISTICS				A	B	C	D	E	F	G	K	L	M	N	P	OPERATING WEIGHT (Kgs)	SHIPPING WEIGHT (Kgs)	SHIPPING DIMENSIONS (L x W x H)
25HNB518	0	X	O	O	O	792.5	750.6	95.6	15.9	166.1	626.3	231.3	70.9	12.7	373.6	412.8	330.2	87	103	821.2 X 901.2 X 913.2
25HNB524	0	X	O	O	O	889.0	859.9	95.6	15.9	166.1	722.8	231.3	70.9	12.7	438.2	444.5	412.8	101	120	917.7 X 997.7 X 999.5
25HNB530	0	X	O	O	O	889.0	946.3	95.6	19.1	166.1	722.8	231.3	70.9	12.7	438.2	444.5	444.5	107	126	917.7 X 997.7 X 1085.9
25HNB536	0	X	O	O	O	889.0	946.3	35.6	19.1	166.1	722.8	231.3	70.9	12.7	438.2	425.5	425.5	107	126	917.7 X 997.7 X 1085.9
25HNB542	0	X	O	O	O	889.0	773.6	97.9	22.2	166.1	722.8	231.3	74.5	16.3	447.7	412.8	355.6	123	141	917.7 X 997.7 X 913.2
25HNB548	0	X	O	O	O	889.0	859.9	97.9	22.2	166.1	722.8	231.3	74.5	16.3	447.7	406.4	406.4	130	153	917.7 X 997.7 X 999.5
25HNB560	0	X	O	O	O	889.0	1032.6	97.9	22.2	166.1	722.8	231.3	74.5	16.3	438.2	444.5	444.5	147	167	917.7 X 997.7 X 1172.2
		208-230-1-60	230-1-60	208/230-3-60	460-3-60															

X = YES
O = NO

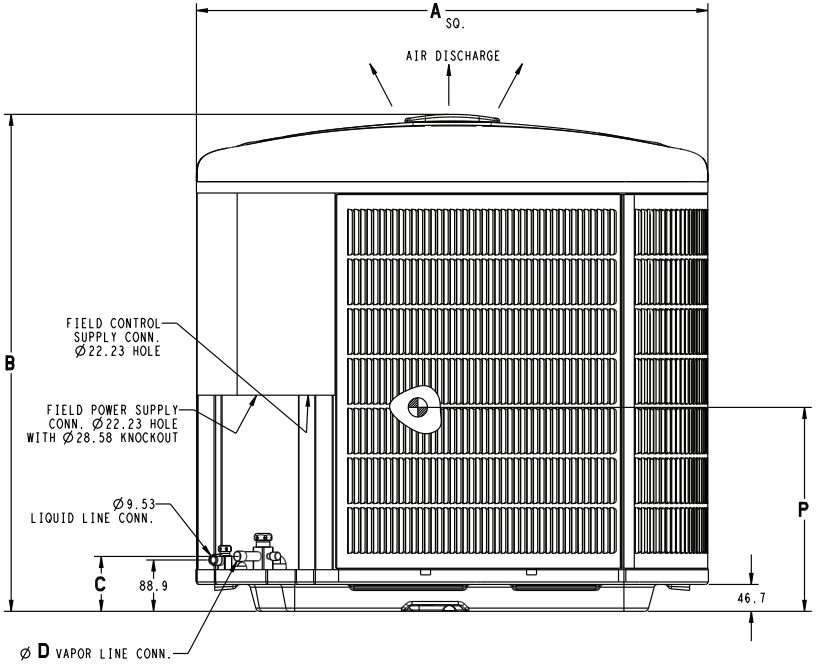

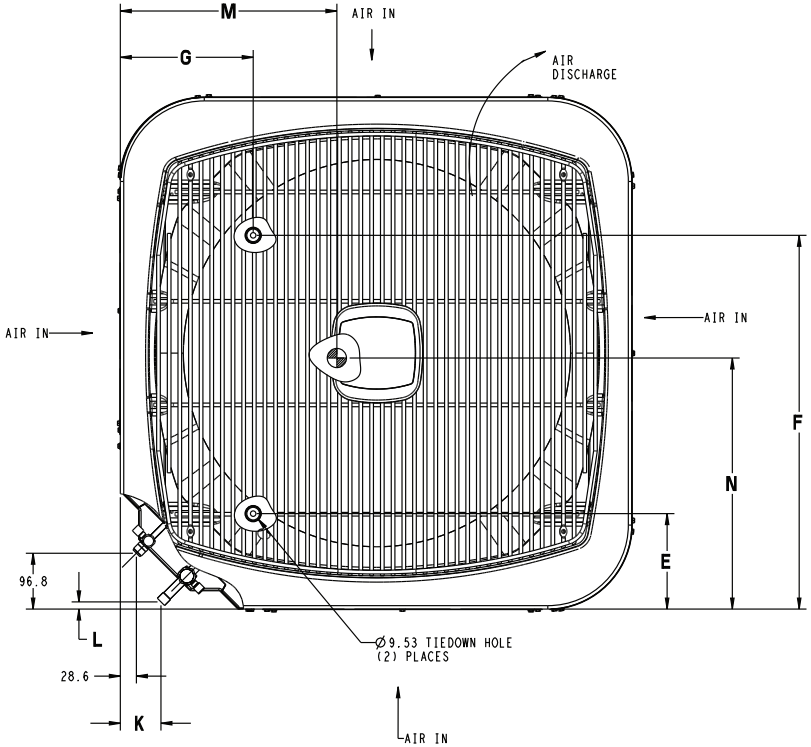

UNIT SIZE	MINIMUM MOUNTING PAD DIMENSIONS
-	660.4 X 660.4
18	800.1 X 800.1
24,30,36 42,48,60	889.0 X 889.0

BALANCE POINT WORKSHEET

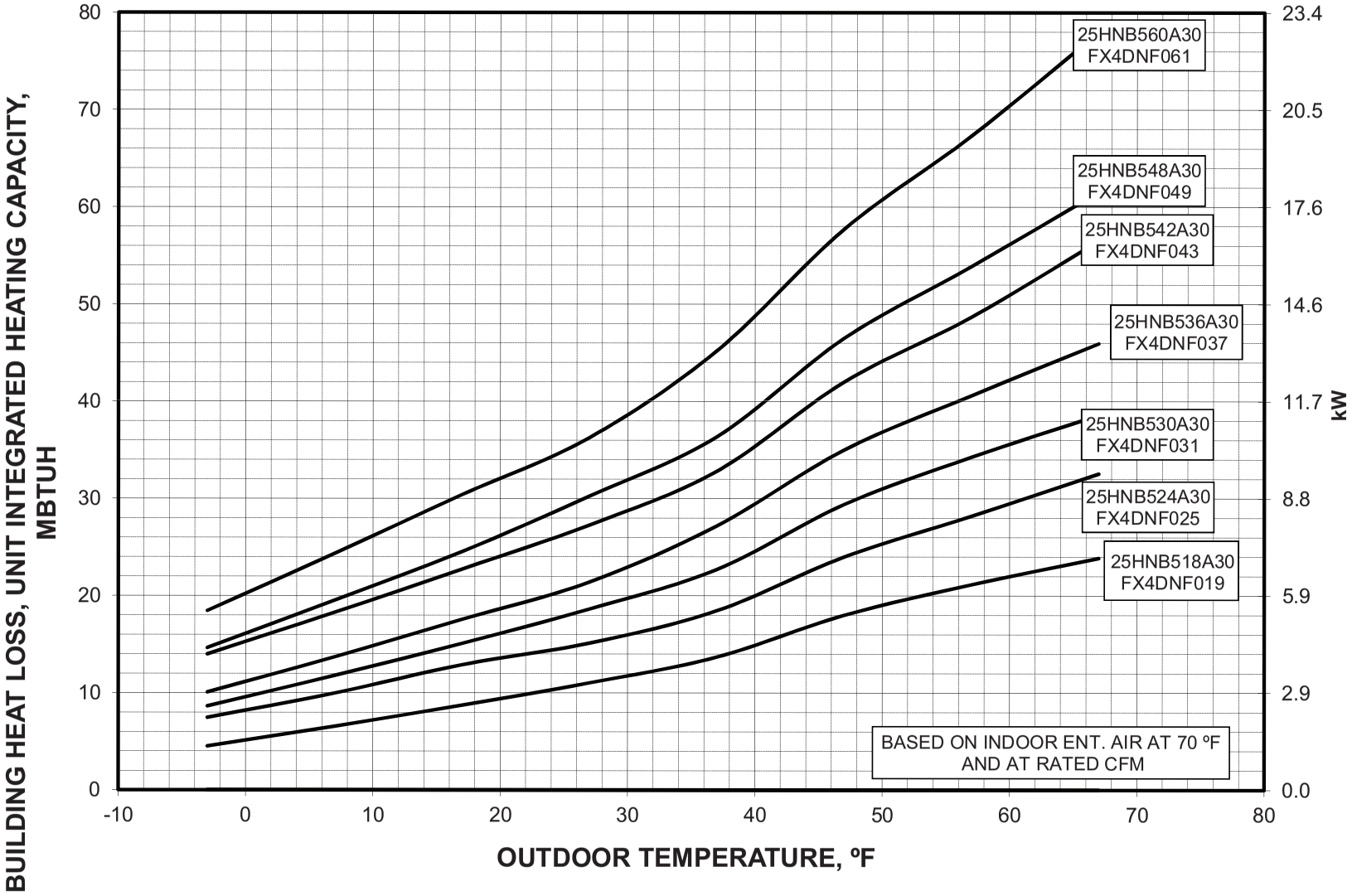

25HNB5

CLEARANCES

Clearances (various examples)

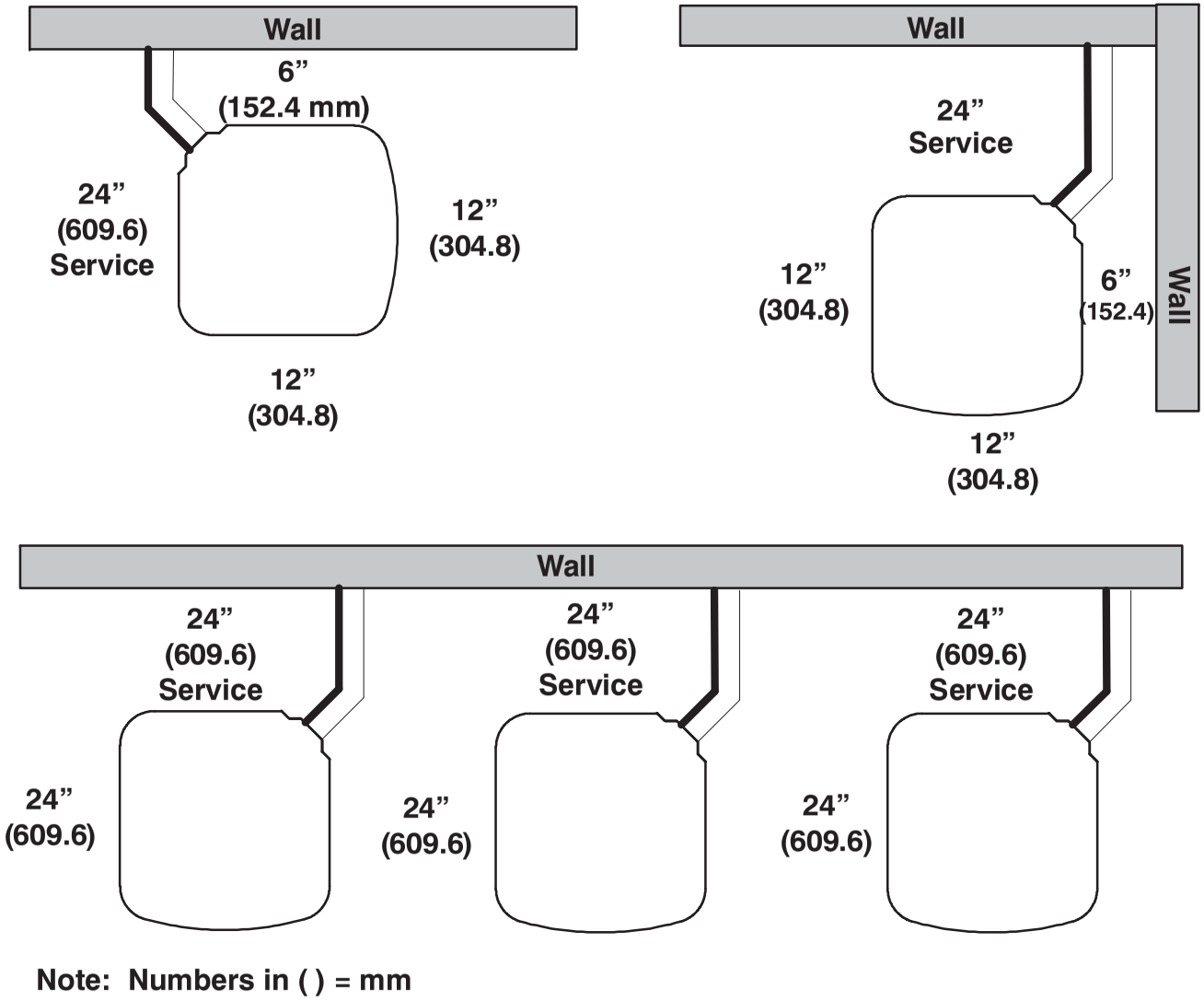

A07833

IMPORTANT: When installing multiple units in an alcove, roof well, or partially enclosed area, ensure there is adequate ventilation to prevent re-circulation of discharge air.

COMBINATION RATINGS

Unit Size – Series	Indoor Model	Clg Cap.	ARI Standard Ratings										Furnace Model
			Cooling					Heating					
			Factory Enhance	Std. Rating	SEER TDR	PU-RON TXV	EER	High Temp		Low Temp		HSPF	
								E Cap.	E COP	H Cap.	H COP		
18–30	*FX4DNF019	18,000	TDR&TXV	15.0			12.5	17,700	3.86	10,600	2.56	8.5	
	FB4CNF018	17,700	TDR			14.0	12.2	17,600	3.74	10,600	2.48	8.2	
	FB4CNF024	17,700	TDR			14.0	12.0	17,600	3.74	10,600	2.48	8.2	
	FE4ANF002	17,900	TDR&TXV	14.5			12.5	17,400	3.80	10,400	2.52	8.2	
	FF1ENP018	17,300	TDR&TXV				11.0	18,000	3.50	11,100	2.34	7.8	
	FF1ENP019	17,700	TDR&TXV	14.0			12.0	17,600	3.72	10,700	2.48	8.2	
	FF1ENP024	17,500	TDR&TXV	13.0			11.2	18,000	3.54	11,100	2.36	7.8	
	FF1ENP025	18,000	TDR&TXV	14.5			12.5	17,600	3.82	10,600	2.54	8.2	
	FV4CNF002	17,900	TDR&TXV	14.5			12.5	17,400	3.80	10,400	2.52	8.2	
	FX4DNF025	18,000	TDR&TXV	14.5			12.5	17,700	3.86	10,600	2.54	8.5	
	FY5BNF018	17,600	TDR			13.0	11.5	17,900	3.60	10,900	2.40	8.0	
	FY5BNF024	17,700	TDR			13.0	11.5	17,900	3.64	11,000	2.42	8.0	
	CAP**1814A**	17,200	TXV				11.0	18,000	3.48	11,100	2.34	7.8	
	CAP**1814A**	17,200	TDR&TXV	14.0			12.0	17,100	3.54	10,300	2.42	7.8	58CV(A,X)070–12
	CAP**1814A**	17,400	TDR&TXV	14.0			12.0	17,400	3.64	10,500	2.46	8.0	58PH*045–08
	CAP**2414A**	17,600	TXV		13.0		11.2	18,000	3.58	11,200	2.38	8.0	
	CAP**2414A**	17,500	TDR&TXV	14.5			12.2	17,300	3.66	10,400	2.46	8.0	58CV(A,X)070–12
	CAP**2414A**	17,800	TDR&TXV	14.5			12.2	17,600	3.80	10,600	2.52	8.2	58PH*045–08
	CAP**2417A**	17,600	TXV		13.0		11.2	18,000	3.58	11,200	2.38	8.0	
	CAP**2417A**	17,500	TDR&TXV	14.5			12.2	17,300	3.68	10,400	2.48	8.0	58MV(B,C)060–14
	CAP**2417A**	17,600	TDR&TXV	14.5			12.2	17,300	3.70	10,400	2.48	8.0	58CV(A,X)090–16
	CAP**2417A**	18,000	TDR&TXV	15.0			12.7	17,700	3.96	10,700	2.60	8.5	58MEB040–12
	CAP**2417A**	18,000	TDR&TXV	14.5			12.5	17,600	3.88	10,600	2.56	8.5	353BAV036060
	CAP**2417A**	18,000	TDR&TXV	14.5			12.2	17,700	3.84	10,700	2.52	8.2	OVMAAB036098
	CAP**2417A**	17,900	TDR&TXV	14.5			12.2	17,600	3.78	10,600	2.50	8.2	OVLAAB036098
	CNPF*2418A**	17,600	TXV		13.0		11.2	18,000	3.62	11,200	2.38	8.0	
	CNPH*2417A**	17,500	TDR&TXV	14.5			12.2	17,400	3.70	10,400	2.48	8.2	58MVB040–14
	CNPH*2417A**	17,500	TDR&TXV	14.5			12.2	17,400	3.70	10,400	2.48	8.2	58MV(B,C)060–14
	CNPH*2417A**	17,500	TDR&TXV	14.5			12.2	17,300	3.70	10,400	2.48	8.0	58MV(B,C)080–14
	CNPH*2417A**	17,500	TDR&TXV	14.5			12.2	17,300	3.70	10,400	2.48	8.0	58CV(A,X)070–12
	CNPH*2417A**	17,600	TDR&TXV	14.5			12.2	17,400	3.72	10,400	2.48	8.2	58CV(A,X)090–16
	CNPH*2417A**	17,800	TDR&TXV	14.5			12.2	17,600	3.80	10,600	2.52	8.2	58PH*045–08
	CNPH*2417A**	18,000	TDR&TXV	14.5			12.5	17,700	3.92	10,600	2.56	8.5	58MEB040–12
	CNPH*2417A**	17,800	TDR&TXV	14.5			12.5	17,500	3.82	10,500	2.52	8.2	58MEC060–12
	CNPH*2417A**	18,000	TDR&TXV	14.0			12.0	18,000	3.90	11,000	2.54	8.5	58HDV040––12
	CNPH*2417A**	18,000	TDR&TXV	14.0			12.2	18,000	3.92	10,900	2.54	8.5	58HDV060––12
	CNPH*2417A**	17,600	TXV				11.0	18,000	3.60	11,200	2.38	8.0	
	CNPH*2417A**	18,000	TDR&TXV	14.0			12.2	17,800	3.86	10,800	2.52	8.2	OVMAAB036098
	CNPH*2417A**	17,900	TDR&TXV	14.0			12.2	17,700	3.80	10,700	2.50	8.2	OVLAAB036098
	CNPV*1814A**	17,500	TXV		13.0		11.0	18,000	3.58	11,100	2.38	8.0	
	CNPV*1814A**	17,400	TDR&TXV	14.0			12.2	17,300	3.64	10,400	2.44	8.0	58CV(A,X)070–12
	CNPV*1814A**	17,600	TDR&TXV	14.0			12.2	17,500	3.70	10,500	2.48	8.2	58PH*045–08
	CNPV*1917A**	17,800	TXV		13.0		11.2	18,000	3.64	11,200	2.40	8.0	
	CNPV*1917A**	17,700	TDR&TXV	14.5			12.2	17,400	3.74	10,400	2.50	8.2	58MV(B,C)060–14
	CNPV*1917A**	17,700	TDR&TXV	14.5			12.5	17,400	3.76	10,400	2.50	8.2	58CV(A,X)090–16
	CNPV*1917A**	18,000	TDR&TXV	15.0			12.7	17,800	4.04	10,700	2.62	8.5	58MEB040–12
	CNPV*1917A**	18,000	TDR&TXV	15.0			12.7	17,700	3.94	10,600	2.58	8.5	58MEC060–12
	CNPV*1917A**	18,000	TDR&TXV	14.5			12.2	17,900	3.92	10,800	2.54	8.5	OVMAAB036098
	CNPV*1917A**	18,000	TDR&TXV	14.5			12.2	17,700	3.88	10,700	2.54	8.5	OVLAAB036098
	CNPV*2414A**	17,600	TXV		13.0		11.2	18,000	3.62	11,200	2.38	8.0	
	CNPV*2414A**	17,500	TDR&TXV	14.5			12.2	17,300	3.70	10,400	2.48	8.0	58CV(A,X)070–12
	CNPV*2414A**	17,800	TDR&TXV	14.5			12.2	17,600	3.80	10,600	2.52	8.2	58PH*045–08
	CNPV*2417A**	17,600	TXV		13.0		11.2	18,000	3.62	11,200	2.38	8.0	
	CNPV*2417A**	17,500	TDR&TXV	14.5			12.2	17,400	3.70	10,400	2.48	8.2	58MV(B,C)060–14
	CNPV*2417A**	17,600	TDR&TXV	14.5			12.2	17,400	3.72	10,400	2.48	8.2	58CV(A,X)090–16
	CNPV*2417A**	18,000	TDR&TXV	14.5			12.5	17,700	3.92	10,600	2.56	8.5	58MEB040–12
	CNPV*2417A**	17,800	TDR&TXV	14.5			12.5	17,500	3.82	10,500	2.52	8.2	58MEC060–12
	CNPV*2417A**	18,000	TDR&TXV	14.0			12.2	17,800	3.86	10,800	2.52	8.2	OVMAAB036098
	CNPV*2417A**	17,900	TDR&TXV	14.0			12.2	17,700	3.80	10,700	2.50	8.2	OVLAAB036098
	CSPH*2412A**	17,800	TXV		13.0		11.2	18,000	3.64	11,200	2.40	8.0	
	CSPH*2412A**	17,700	TDR&TXV	14.5			12.2	17,400	3.70	10,500	2.48	8.2	58MVB040–14
	CSPH*2412A**	17,700	TDR&TXV	14.5			12.2	17,400	3.70	10,500	2.48	8.2	58MV(B,C)060–14
	CSPH*2412A**	17,600	TDR&TXV	14.5			12.2	17,300	3.68	10,400	2.48	8.0	58MV(B,C)080–14
	CSPH*2412A**	17,600	TDR&TXV	14.5			12.2	17,400	3.68	10,400	2.48	8.0	58CV(A,X)070–12
	CSPH*2412A**	17,700	TDR&TXV	14.5			12.2	17,400	3.72	10,500	2.48	8.2	58CV(A,X)090–16
	CSPH*2412A**	17,900	TDR&TXV	14.5			12.2	17,600	3.78	10,600	2.50	8.2	58PH*045–08
	CSPH*2412A**	18,000	TDR&TXV	14.5			12.5	17,600	3.86	10,600	2.56	8.2	58MEB040–12
	CSPH*2412A**	17,800	TDR&TXV	14.5			12.5	17,400	3.74	10,400	2.50	8.2	58MEC060–12
	CSPH*2412A**	18,000	TDR&TXV	14.0			12.0	18,000	3.90	11,000	2.54	8.5	58HDV040––12
	CSPH*2412A**	18,000	TDR&TXV	14.0			12.2	18,000	3.88	11,000	2.52	8.5	58HDV060––12
	CSPH*2412A**	18,000	TDR&TXV	14.0			12.2	17,900	3.86	10,800	2.52	8.2	OVMAAB036098
	CSPH*2412A**	18,000	TDR&TXV	14.0			12.2	17,700	3.80	10,700	2.50	8.2	OVLAAB036098
24–30	*FX4DNF025	24,000	TDR&TXV	15.0			12.5	24,000	3.92	14,800	2.68	9.0	
	FB4CNF024	23,600	TDR			14.5	11.5	24,000	3.76	14,800	2.58	8.5	
	FB4CNF030	24,000	TDR			15.0	12.2	24,000	3.92	14,800	2.68	8.7	
	FE4AN(B,F)003	24,000	TDR&TXV	15.5			12.5	24,000	3.90	14,400	2.70	9.0	
	FE4ANF002	24,000	TDR&TXV	15.2			12.5	24,000	3.90	14,500	2.68	9.0	
	FF1ENP024	23,600	TDR&TXV	13.0			11.0	24,000	3.62	15,300	2.50	8.2	
	FF1ENP025	24,000	TDR&TXV	14.5			12.0	24,000	3.82	14,800	2.64	8.5	
	FF1ENP030	23,600	TDR&TXV	13.0			11.0	24,000	3.62	15,200	2.50	8.2	
	FF1ENP031	24,000	TDR&TXV	14.5			12.0	24,000	3.82	14,900	2.64	8.5	
	FF1ENP037	24,000	TDR&TXV	14.5			12.0	24,000	3.90	14,900	2.68	8.7	
	FV4CN(B,F)003	24,000	TDR&TXV	15.5			12.5	24,000	3.90	14,400	2.70	9.0	
	FV4CNF002	24,000	TDR&TXV	15.0			12.5	24,000	3.90	14,500	2.68	8.7	

See notes on page 26

COMBINATION RATINGS CONTINUED

Unit Size – Series	Indoor Model	Clg Cap.	ARI Standard Ratings										Furnace Model
			Cooling					Heating					
			Factory Enhance	Std. Rating	SEER TDR	PU-RON TXV	EER	High Temp		Low Temp		HSPF	
								E Cap.	E COP	H Cap.	H COP		
	FX4DN(B,F)031	24,000	TDR&TXV	14.5			12.2	24,000	3.92	14,900	2.68	8.7	
	FY5BNF024	24,000	TDR			14.0	11.5	24,000	3.76	15,000	2.60	8.5	
	FY5BNF030	24,000	TDR			13.5	11.5	24,000	3.76	15,200	2.56	8.5	
	CAP**2414A**	23,600	TXV		13.0		11.2	24,000	3.68	15,300	2.52	8.5	
	CAP**2414A**	23,400	TDR&TXV	15.0			12.2	24,000	3.74	14,200	2.58	8.5	58CV(A,X)070–12
	CAP**2414A**	23,800	TDR&TXV	15.0			12.2	24,000	3.80	14,600	2.62	8.5	58PH*045–08
	CAP**2417A**	23,600	TXV		13.0		11.2	24,000	3.68	15,300	2.52	8.5	
	CAP**2417A**	23,800	TDR&TXV	15.0			12.5	24,000	3.86	14,600	2.66	8.7	58MV(B,C)060–14
	CAP**2417A**	23,600	TDR&TXV	15.0			12.5	24,000	3.78	14,400	2.64	8.5	58CV(A,X)090–16
	CAP**2417A**	24,000	TDR&TXV	15.0			12.5	24,000	3.94	14,600	2.70	8.7	58MEB040–12
	CAP**2417A**	24,000	TDR&TXV	15.0			12.5	24,000	3.96	14,600	2.70	8.8	58MEC060–12
	CAP**2417A**	24,000	TDR&TXV	15.0			12.5	24,000	3.90	14,600	2.68	8.7	58MEC080–12
	CAP**2417A**	24,000	TDR&TXV	14.5			12.0	24,000	3.78	14,200	2.52	8.2	OVMAAB036098
	CAP**2417A**	24,000	TDR&TXV	14.5			12.0	24,000	3.78	14,100	2.54	8.5	OVLAAB036098
	CAP**2417A**	23,800	TDR&TXV	14.5			12.2	24,000	3.78	13,900	2.54	8.2	OVMAAB042112
	CAP**3014A**	23,800	TXV		13.5		11.2	24,000	3.70	15,300	2.54	8.5	
	CAP**3014A**	23,600	TDR&TXV	15.0			12.2	24,000	3.76	14,500	2.64	8.5	58CV(A,X)070–12
	CAP**3014A**	24,000	TDR&TXV	15.0			12.2	24,000	3.84	14,700	2.66	8.7	58PH*045–08
	CAP**3017A**	23,800	TXV		13.5		11.2	24,000	3.70	15,300	2.54	8.5	
	CAP**3017A**	24,000	TDR&TXV	15.2			12.5	24,000	3.90	14,600	2.70	9.0	58MV(B,C)060–14
	CAP**3017A**	23,800	TDR&TXV	15.2			12.5	24,000	3.82	14,400	2.66	8.5	58CV(A,X)090–16
	CAP**3017A**	24,000	TDR&TXV	15.5			12.5	24,000	4.00	14,700	2.74	9.0	58MEB040–12
	CAP**3017A**	24,000	TDR&TXV	15.5			12.5	24,000	4.00	14,700	2.74	9.0	58MEC060–12
	CAP**3017A**	24,000	TDR&TXV	15.2			12.5	24,000	3.96	14,600	2.72	9.0	58MEC080–12
	CAP**3017A**	24,000	TDR&TXV	14.5			12.2	24,000	3.80	14,200	2.56	8.5	OVMAAB036098
	CAP**3017A**	24,000	TDR&TXV	14.5			12.2	24,000	3.82	14,100	2.56	8.5	OVLAAB036098
	CAP**3017A**	24,000	TDR&TXV	15.0			12.2	24,000	3.80	14,000	2.56	8.5	OVMAAB042112
	CAP**3619A**	24,000	TDR&TXV	14.5			12.2	24,000	3.90	14,800	2.68	8.7	58HDV040––12
	CAP**3619A**	24,000	TDR&TXV	15.0			12.2	24,000	3.96	14,900	2.70	9.0	58HDV060––12
	CNPF*2418A**	23,600	TXV		13.0		11.2	24,000	3.76	15,300	2.54	8.5	
	CNPH*2417A**	23,600	TXV		13.0		11.2	24,000	3.76	15,300	2.54	8.5	
	CNPH*2417A**	23,600	TDR&TXV	14.5			12.2	24,000	3.82	14,600	2.62	8.5	58MVB040–14
	CNPH*2417A**	23,800	TDR&TXV	15.0			12.2	24,000	3.92	14,600	2.66	8.6	58MV(B,C)060–14
	CNPH*2417A**	23,600	TDR&TXV	14.5			12.2	24,000	3.82	14,500	2.62	8.5	58MV(B,C)080–14
	CNPH*2417A**	23,400	TDR&TXV	14.5			12.2	24,000	3.76	14,100	2.58	8.5	58MV(B,C)080–20
	CNPH*2417A**	23,600	TDR&TXV	15.0			12.2	24,000	3.84	14,500	2.64	8.5	58MV(B,C)100–20
	CNPH*2417A**	23,600	TDR&TXV	15.0			12.2	24,000	3.88	14,500	2.66	8.7	58MV(B,C)120–20
	CNPH*2417A**	23,400	TDR&TXV	14.5			12.2	24,000	3.80	14,500	2.62	8.5	58CV(A,X)070–12
	CNPH*2417A**	23,600	TDR&TXV	15.0			12.2	24,000	3.84	14,500	2.64	8.7	58CV(A,X)090–16
	CNPH*2417A**	23,600	TDR&TXV	14.5			12.2	24,000	3.84	14,500	2.64	8.5	58CV(A,X)110–20
	CNPH*2417A**	23,600	TDR&TXV	15.0			12.2	24,000	3.84	14,500	2.64	8.5	58CV(A,X)135–22
	CNPH*2417A**	23,600	TDR&TXV	15.0			12.2	24,000	3.84	14,500	2.64	8.5	58CV(A,X)155–22
24–30	CNPH*2417A**	23,600	TDR&TXV	14.5			12.0	24,000	3.84	14,600	2.64	8.5	58PH*045–08
	CNPH*2417A**	23,800	TDR&TXV	15.0			12.5	24,000	3.94	14,600	2.68	8.7	58MEB040–12
	CNPH*2417A**	24,000	TDR&TXV	15.0			12.5	24,000	3.94	14,600	2.68	8.7	58MEC060–12
	CNPH*2417A**	23,800	TDR&TXV	15.0			12.5	24,000	3.92	14,600	2.68	8.7	58MEC080–12
	CNPH*2417A**	23,600	TDR&TXV	14.5			12.0	24,000	3.84	14,800	2.62	8.5	58HDV040––12
	CNPH*2417A**	23,800	TDR&TXV	14.5			12.0	24,000	3.88	14,800	2.64	8.7	58HDV060––12
	CNPH*2417A**	23,800	TDR&TXV	14.5			12.0	24,000	3.82	14,300	2.52	8.5	OVMAAB036098
	CNPH*2417A**	24,000	TDR&TXV	14.5			12.0	24,000	3.84	14,200	2.54	8.5	OVLAAB036098
	CNPH*2417A**	23,800	TDR&TXV	14.5			12.2	24,000	3.82	14,000	2.54	8.5	OVMAAB042112
	CNPH*3017A**	23,800	TXV		13.5		11.2	24,000	3.72	15,300	2.56	8.5	
	CNPH*3017A**	23,800	TDR&TXV	15.0			12.5	24,000	3.80	14,500	2.66	8.5	58MVB040–14
	CNPH*3017A**	24,000	TDR&TXV	15.0			12.5	24,000	3.90	14,600	2.70	9.0	58MV(B,C)060–14
	CNPH*3017A**	23,800	TDR&TXV	15.0			12.5	24,000	3.80	14,400	2.64	8.5	58MV(B,C)080–14
	CNPH*3017A**	23,600	TDR&TXV	15.0			12.5	24,000	3.74	14,100	2.60	8.5	58MV(B,C)080–20
	CNPH*3017A**	23,800	TDR&TXV	15.2			12.5	24,000	3.82	14,400	2.66	8.5	58MV(B,C)100–20
	CNPH*3017A**	24,000	TDR&TXV	15.2			12.5	24,000	3.86	14,500	2.68	8.7	58MV(B,C)120–20
	CNPH*3017A**	23,800	TDR&TXV	15.0			12.5	24,000	3.78	14,500	2.64	8.5	58CV(A,X)070–12
	CNPH*3017A**	23,800	TDR&TXV	15.2			12.5	24,000	3.82	14,400	2.66	8.5	58CV(A,X)090–16
	CNPH*3017A**	23,800	TDR&TXV	15.0			12.5	24,000	3.82	14,500	2.66	8.5	58CV(A,X)110–20
	CNPH*3017A**	23,800	TDR&TXV	15.2			12.5	24,000	3.82	14,500	2.66	8.5	58CV(A,X)135–22
	CNPH*3017A**	23,800	TDR&TXV	15.2			12.5	24,000	3.84	14,500	2.66	8.5	58CV(A,X)155–22
	CNPH*3017A**	24,000	TDR&TXV	15.0			12.2	24,000	3.88	14,700	2.68	8.7	58PH*045–08
	CNPH*3017A**	24,000	TDR&TXV	15.5			12.5	24,000	3.98	14,700	2.74	9.0	58MEB040–12
	CNPH*3017A**	24,000	TDR&TXV	15.5			12.5	24,000	4.00	14,700	2.74	9.0	58MEC060–12
	CNPH*3017A**	24,000	TDR&TXV	15.5			12.5	24,000	3.96	14,600	2.72	9.0	58MEC080–12
	CNPH*3017A**	24,000	TDR&TXV	14.5			12.2	24,000	3.86	14,800	2.66	8.7	58HDV040––12
	CNPH*3017A**	24,000	TDR&TXV	14.5			12.2	24,000	3.92	14,900	2.68	8.7	58HDV060––12
	CNPH*3017A**	24,000	TDR&TXV	14.5			12.2	24,000	3.82	14,500	2.58	8.5	OVMAAB036098
	CNPH*3017A**	24,000	TDR&TXV	14.5			12.2	24,000	3.82	14,200	2.56	8.5	OVLAAB036098
	CNPH*3017A**	24,000	TDR&TXV	15.0			12.2	24,000	3.82	14,000	2.56	8.5	OVMAAB042112
	CNPH*3117A**	24,000	TDR&TXV	15.0			12.5	24,000	4.04	14,900	2.72	9.0	58HDV040––12
	CNPH*3117A**	24,000	TDR&TXV	15.0			12.5	24,000	4.14	15,000	2.74	9.0	58HDV060––12
	CNPH*3117A**	24,000	TDR&TXV	15.0			12.2	24,000	3.98	14,300	2.62	8.7	OVMAAB036098
	CNPH*3117A**	24,000	TDR&TXV	15.0			12.5	24,000	4.00	14,300	2.62	8.7	OVLAAB036098
	CNPH*3117A**	24,000	TDR&TXV	15.2			12.5	24,000	3.98	14,100	2.62	8.7	OVMAAB042112
	CNPV*2414A**	23,600	TXV		13.0		11.2	24,000	3.76	15,300	2.54	8.5	
	CNPV*2414A**	23,400	TDR&TXV	14.5			12.0	24,000	3.80	14,500	2.62	8.5	58CV(A,X)070–12
	CNPV*2414A**	23,600	TDR&TXV	14.5			12.0	24,000	3.84	14,600	2.64	8.5	58PH*045–08
	CNPV*2417A**	23,600	TXV		13.0		11.2	24,000	3.76	15,300	2.54	8.5	
	CNPV*2417A**	23,800	TDR&TXV	15.0			12.2	24,000	3.92	14,600	2.66	8.7	58MV(B,C)060–14
	CNPV*2417A**	23,600	TDR&TXV	15.0			12.2	24,000	3.84	14,500	2.64	8.7	58CV(A,X)090–16
	CNPV*2417A**	23,800	TDR&TXV	15.0			12.5	24,000	3.94	14,600	2.68	8.7	58MEB040–12
	CNPV*2417A**	24,000	TDR&TXV	15.0			12.5	24,000	3.94	14,600	2.68	8.7	58MEC060–12

See notes on page 26

COMBINATION RATINGS CONTINUED

Unit Size – Series	Indoor Model	Clg Cap.	ARI Standard Ratings										Furnace Model
			Cooling					Heating					
								High Temp		Low Temp			
			Factory Enhance	Std. Rating	SEER TDR	PU-RON TXV	EER	E Cap.	E COP	H Cap.	H COP	HSPF	
	CNPV*2417A**	23,800	TDR&TXV	15.0			12.5	24,000	3.92	14,600	2.68	8.7	58MEC080–12
	CNPV*2417A**	23,800	TDR&TXV	14.5			12.0	24,000	3.82	14,300	2.52	8.5	OVMAAB036098
	CNPV*2417A**	24,000	TDR&TXV	14.5			12.0	24,000	3.84	14,200	2.54	8.5	OVLAAB036098
	CNPV*2417A**	23,800	TDR&TXV	14.5			12.2	24,000	3.82	14,000	2.54	8.5	OVMAAB042112
	CNPV*3014A**	23,800	TXV		13.5		11.2	24,000	3.72	15,300	2.56	8.5	
	CNPV*3014A**	23,600	TDR&TXV	15.0			12.2	24,000	3.78	14,500	2.64	8.5	58CV(A,X)070–12
	CNPV*3014A**	23,800	TDR&TXV	15.0			12.2	24,000	3.82	14,700	2.64	8.5	58PH*045–08
	CNPV*3017A**	23,800	TXV		13.5		11.2	24,000	3.72	15,300	2.56	8.5	
	CNPV*3017A**	24,000	TDR&TXV	15.2			12.5	24,000	3.90	14,600	2.70	9.0	58MV(B,C)060–14
	CNPV*3017A**	23,800	TDR&TXV	15.2			12.5	24,000	3.82	14,400	2.66	8.5	58CV(A,X)090–16
	CNPV*3017A**	24,000	TDR&TXV	15.2			12.5	24,000	3.98	14,700	2.74	9.0	58MEB040–12
	CNPV*3017A**	24,000	TDR&TXV	15.2			12.5	24,000	4.00	14,700	2.74	9.0	58MEC060–12
	CNPV*3017A**	24,000	TDR&TXV	15.2			12.5	24,000	3.96	14,600	2.72	9.0	58MEC080–12
	CNPV*3017A**	24,000	TDR&TXV	14.5			12.2	24,000	3.82	14,500	2.58	8.5	OVMAAB036098
	CNPV*3017A**	24,000	TDR&TXV	14.5			12.2	24,000	3.82	14,200	2.56	8.5	OVLAAB036098
	CNPV*3017A**	24,000	TDR&TXV	15.0			12.2	24,000	3.82	14,000	2.56	8.5	OVMAAB042112
	CNPV*3117A**	24,000	TXV		13.5		11.5	24,000	3.88	15,400	2.60	8.7	
	CNPV*3117A**	24,000	TDR&TXV	15.5			12.5	24,000	4.08	14,700	2.76	9.0	58MV(B,C)060–14
	CNPV*3117A**	24,000	TDR&TXV	15.5			12.5	24,000	3.98	14,500	2.72	8.8	58CV(A,X)090–16
	CNPV*3117A**	24,000	TDR&TXV	15.5			13.0	24,000	4.20	14,800	2.80	9.0	58MEB040–12
	CNPV*3117A**	24,000	TDR&TXV	15.5			13.0	24,000	4.22	14,800	2.80	9.0	58MEC060–12
	CNPV*3117A**	24,000	TDR&TXV	15.5			12.5	24,000	4.16	14,700	2.78	9.0	58MEC080–12
	CNPV*3117A**	24,000	TDR&TXV	15.0			12.2	24,000	3.98	14,600	2.64	8.8	OVMAAB036098
	CNPV*3117A**	24,000	TDR&TXV	15.0			12.5	24,000	4.00	14,500	2.66	8.8	OVLAAB036098
	CNPV*3117A**	24,000	TDR&TXV	15.2			12.5	24,000	3.98	14,400	2.66	8.8	OVMAAB042112
	CSPH*2412A**	24,000	TXV		13.5		11.2	24,000	3.76	15,300	2.56	8.5	
	CSPH*2412A**	23,800	TDR&TXV	15.0			12.2	24,000	3.82	14,600	2.64	8.5	58MVB040–14
	CSPH*2412A**	24,000	TDR&TXV	15.0			12.5	24,000	3.92	14,700	2.68	8.7	58MV(B,C)060–14
	CSPH*2412A**	23,800	TDR&TXV	15.0			12.2	24,000	3.80	14,500	2.64	8.5	58MV(B,C)080–14
	CSPH*2412A**	23,600	TDR&TXV	15.0			12.2	24,000	3.74	14,200	2.58	8.5	58MV(B,C)080–20
	CSPH*2412A**	23,800	TDR&TXV	15.0			12.5	24,000	3.82	14,500	2.64	8.5	58MV(B,C)100–20
	CSPH*2412A**	24,000	TDR&TXV	15.0			12.5	24,000	3.88	14,600	2.66	8.7	58MV(B,C)120–20
	CSPH*2412A**	23,800	TDR&TXV	15.0			12.2	24,000	3.80	14,500	2.64	8.5	58CV(A,X)070–12
24–30	CSPH*2412A**	23,800	TDR&TXV	15.0			12.5	24,000	3.84	14,500	2.66	8.5	58CV(A,X)090–16
	CSPH*2412A**	23,800	TDR&TXV	15.0			12.2	24,000	3.82	14,600	2.64	8.5	58CV(A,X)110–20
	CSPH*2412A**	23,800	TDR&TXV	15.0			12.2	24,000	3.82	14,600	2.64	8.5	58CV(A,X)135–22
	CSPH*2412A**	23,800	TDR&TXV	15.0			12.5	24,000	3.84	14,600	2.64	8.5	58CV(A,X)155–22
	CSPH*2412A**	23,800	TDR&TXV	15.0			12.2	24,000	3.82	14,600	2.64	8.5	58PH*045–08
	CSPH*2412A**	24,000	TDR&TXV	15.0			12.5	24,000	3.92	14,600	2.68	8.7	58MEB040–12
	CSPH*2412A**	24,000	TDR&TXV	15.0			12.5	24,000	3.94	14,700	2.68	8.7	58MEC060–12
	CSPH*2412A**	24,000	TDR&TXV	15.0			12.5	24,000	3.90	14,600	2.68	8.7	58MEC080–12
	CSPH*2412A**	23,800	TDR&TXV	14.5			12.0	24,000	3.82	14,800	2.62	8.5	58HDV040––12
	CSPH*2412A**	24,000	TDR&TXV	14.5			12.0	24,000	3.86	14,900	2.64	8.7	58HDV060––12
	CSPH*2412A**	24,000	TDR&TXV	14.5			12.0	24,000	3.82	14,300	2.54	8.5	OVMAAB036098
	CSPH*2412A**	24,000	TDR&TXV	14.5			12.0	24,000	3.82	14,200	2.54	8.5	OVLAAB036098
	CSPH*2412A**	24,000	TDR&TXV	14.5			12.2	24,000	3.82	14,100	2.54	8.5	OVMAAB042112
	CSPH*3012A**	24,000	TXV		13.5		11.2	24,000	3.74	15,300	2.56	8.5	
	CSPH*3012A**	23,800	TDR&TXV	15.0			12.5	24,000	3.80	14,500	2.64	8.5	58MVB040–14
	CSPH*3012A**	24,000	TDR&TXV	15.2			12.5	24,000	3.90	14,600	2.70	9.0	58MV(B,C)060–14
	CSPH*3012A**	23,800	TDR&TXV	15.0			12.5	24,000	3.78	14,500	2.64	8.5	58MV(B,C)080–14
	CSPH*3012A**	23,600	TDR&TXV	15.0			12.5	24,000	3.72	14,100	2.58	8.5	58MV(B,C)080–20
	CSPH*3012A**	23,800	TDR&TXV	15.2			12.5	24,000	3.80	14,500	2.66	8.5	58MV(B,C)100–20
	CSPH*3012A**	24,000	TDR&TXV	15.5			12.5	24,000	3.86	14,500	2.68	8.7	58MV(B,C)120–20
	CSPH*3012A**	23,800	TDR&TXV	15.0			12.5	24,000	3.78	14,500	2.64	8.5	58CV(A,X)070–12
	CSPH*3012A**	23,800	TDR&TXV	15.5			12.5	24,000	3.82	14,500	2.66	8.5	58CV(A,X)090–16
	CSPH*3012A**	23,800	TDR&TXV	15.0			12.5	24,000	3.80	14,500	2.66	8.5	58CV(A,X)110–20
	CSPH*3012A**	23,800	TDR&TXV	15.0			12.5	24,000	3.82	14,500	2.66	8.5	58CV(A,X)135–22
	CSPH*3012A**	24,000	TDR&TXV	15.2			12.5	24,000	3.82	14,500	2.66	8.5	58CV(A,X)155–22
	CSPH*3012A**	24,000	TDR&TXV	15.0			12.2	24,000	3.86	14,700	2.66	8.7	58PH*045–08
	CSPH*3012A**	24,000	TDR&TXV	15.5			12.5	24,000	3.96	14,700	2.72	9.0	58MEB040–12
	CSPH*3012A**	24,000	TDR&TXV	15.5			12.5	24,000	3.98	14,700	2.72	9.0	58MEC060–12
	CSPH*3012A**	24,000	TDR&TXV	15.2			12.5	24,000	3.94	14,600	2.70	9.0	58MEC080–12
	CSPH*3012A**	24,000	TDR&TXV	14.5			12.2	24,000	3.84	14,800	2.64	8.5	58HDV040––12
	CSPH*3012A**	24,000	TDR&TXV	14.5			12.2	24,000	3.90	14,900	2.68	8.5	58HDV060––12
	CSPH*3012A**	24,000	TDR&TXV	14.5			12.2	24,000	3.86	14,300	2.56	8.5	OVMAAB036098
	CSPH*3012A**	24,000	TDR&TXV	14.5			12.2	24,000	3.88	14,200	2.56	8.5	OVLAAB036098
	CSPH*3012A**	24,000	TDR&TXV	15.0			12.2	24,000	3.86	14,000	2.56	8.5	OVMAAB042112
	*FX4DN(B,F)031	28,800	TDR&TXV	15.0			12.5	29,600	3.92	17,300	2.58	8.5	
	FB4CNF030	28,400	TDR			14.5	12.0	29,600	3.82	17,400	2.52	8.5	
	FB4CNF036	28,400	TDR			14.5	12.0	29,600	3.82	17,400	2.52	8.5	
	FE4AN(B,F)003	28,600	TDR&TXV	15.5			12.5	29,000	3.86	16,800	2.56	8.5	
	FE4ANF002	28,400	TDR&TXV	15.0			12.2	29,200	3.84	17,000	2.54	8.5	
	FF1ENP030	28,000	TDR&TXV	13.5			11.2	30,000	3.64	17,700	2.40	8.0	
	FF1ENP031	28,400	TDR&TXV	14.5			12.0	29,400	3.80	17,300	2.52	8.5	
	FF1ENP036	28,400	TDR&TXV	13.7			11.3	30,000	3.68	17,900	2.44	8.2	
30–30	FF1ENP037	28,600	TDR&TXV	14.5			11.7	29,800	3.82	17,500	2.52	8.5	
	FV4CN(B,F)003	28,600	TDR&TXV	15.5			12.5	29,000	3.86	16,800	2.56	8.5	
	FV4CNF002	28,400	TDR&TXV	15.0			12.2	29,200	3.84	17,000	2.54	8.2	
	FX4DN(B,F)037	29,400	TDR&TXV	15.2			12.5	29,600	4.02	17,400	2.62	8.7	
	FY5BNF030	28,600	TDR			14.5	12.0	29,800	3.82	17,600	2.50	8.5	
	FY5BNF036	28,600	TDR			14.0	11.5	30,000	3.76	17,700	2.48	8.2	
	CAP**3014A**	28,200	TXV		13.5		11.2	30,000	3.68	18,000	2.44	8.2	
	CAP**3014A**	28,000	TDR&TXV	14.5			12.0	29,000	3.74	17,000	2.50	8.2	58CV(A,X)070–12

See notes on page 26

COMBINATION RATINGS CONTINUED

Unit Size – Series	Indoor Model	Clg Cap.	ARI Standard Ratings										Furnace Model
			Cooling					Heating					
								High Temp		Low Temp			
			Factory Enhance	Std. Rating	SEER TDR	PU-RON TXV	EER	E Cap.	E COP	H Cap.	H COP	HSPF	
	CAP**3017A**	28,200	TXV		13.5		11.2	30,000	3.68	18,000	2.44	8.2	
	CAP**3017A**	28,200	TDR&TXV	15.0			12.2	29,000	3.80	16,900	2.54	8.2	58MV(B,C)060–14
	CAP**3017A**	28,200	TDR&TXV	15.0			12.2	29,000	3.78	16,800	2.52	8.2	58CV(A,X)090–16
	CAP**3017A**	28,200	TDR&TXV	14.5			12.0	29,400	3.78	17,200	2.50	8.2	58PH*070–16
	CAP**3017A**	28,600	TDR&TXV	15.2			12.2	29,200	3.86	17,100	2.56	8.5	58MEB040–12
	CAP**3017A**	28,600	TDR&TXV	15.0			12.2	29,400	3.88	17,100	2.56	8.5	58MEC060–12
	CAP**3017A**	28,400	TDR&TXV	15.0			12.2	29,200	3.84	17,000	2.54	8.5	58MEC080–12
	CAP**3017A**	28,600	TDR&TXV	15.0			12.2	29,400	3.88	17,200	2.56	8.5	58MEC080–16
	CAP**3017A**	28,000	TDR&TXV	15.0			12.2	28,800	3.72	16,800	2.48	8.2	58VMR105–12
	CAP**3017A**	28,200	TDR&TXV	15.0			12.2	29,200	3.80	17,000	2.52	8.2	58VLR105–12
	CAP**3017A**	28,200	TDR&TXV	14.5			12.0	28,800	3.80	16,800	2.50	8.2	OVMAAB036098
	CAP**3017A**	28,200	TDR&TXV	15.0			12.2	28,800	3.80	16,700	2.52	8.2	OVLAAB036098
	CAP**3017A**	28,200	TDR&TXV	15.2			12.5	28,600	3.86	16,600	2.54	8.5	OVMAAB042112
	CAP**3614A**	28,400	TXV		13.5		11.2	30,000	3.70	18,000	2.44	8.2	
	CAP**3614A**	28,200	TDR&TXV	15.0			12.0	29,200	3.76	17,000	2.50	8.2	58CV(A,X)070–12
	CAP**3617A**	28,400	TXV		13.5		11.2	30,000	3.70	18,000	2.44	8.2	
	CAP**3617A**	28,400	TDR&TXV	15.2			12.2	29,200	3.84	17,000	2.54	8.5	58MV(B,C)060–14
	CAP**3617A**	28,200	TDR&TXV	15.2			12.2	29,000	3.80	16,800	2.54	8.2	58CV(A,X)090–16
	CAP**3617A**	28,400	TDR&TXV	14.5			12.0	29,400	3.80	17,200	2.52	8.2	58PH*070–16
	CAP**3617A**	28,600	TDR&TXV	15.2			12.2	29,200	3.90	17,100	2.58	8.5	58MEB040–12
	CAP**3617A**	28,600	TDR&TXV	15.2			12.2	29,400	3.90	17,200	2.58	8.5	58MEC060–12
	CAP**3617A**	28,600	TDR&TXV	15.2			12.2	29,200	3.88	17,100	2.56	8.5	58MEC080–12
	CAP**3617A**	28,800	TDR&TXV	15.0			12.2	29,400	3.92	17,300	2.58	8.5	58MEC080–16
	CAP**3617A**	28,000	TDR&TXV	15.0			12.2	28,800	3.74	16,800	2.50	8.2	58VMR105–12
	CAP**3617A**	28,400	TDR&TXV	15.0			12.2	29,200	3.82	17,100	2.54	8.5	58VLR105–12
	CAP**3617A**	28,200	TDR&TXV	14.5			12.2	28,800	3.82	16,800	2.52	8.2	OVMAAB036098
	CAP**3617A**	28,200	TDR&TXV	15.0			12.2	28,800	3.82	16,700	2.52	8.2	OVLAAB036098
	CAP**3617A**	28,400	TDR&TXV	15.5			12.5	28,600	3.90	16,600	2.56	8.5	OVMAAB042112
	CAP**3619A**	28,400	TXV		13.5		11.2	30,000	3.70	18,000	2.44	8.2	
	CAP**3619A**	28,200	TDR&TXV	14.5			12.0	29,600	3.76	17,300	2.48	8.2	58HDV040––12
	CAP**3619A**	28,400	TDR&TXV	14.5			12.0	29,600	3.80	17,400	2.52	8.5	58HDV060––12
	CAP**3619A**	28,200	TDR&TXV	14.5			12.0	29,600	3.76	17,300	2.48	8.2	58HDV040––12
	CAP**3619A**	28,400	TDR&TXV	14.5			12.0	29,600	3.80	17,400	2.52	8.5	58HDV060––12
	CAP**3621A**	28,400	TXV		13.5		11.2	30,000	3.70	18,000	2.44	8.2	
	CAP**3621A**	28,200	TDR&TXV	15.0			12.2	29,000	3.76	16,800	2.52	8.2	58MV(B,C)080–14
	CAP**3621A**	28,200	TDR&TXV	15.0			12.2	29,000	3.80	16,900	2.52	8.2	58MV(B,C)080–20
	CAP**3621A**	28,000	TDR&TXV	15.0			12.2	28,800	3.74	16,800	2.50	8.2	58MV(B,C)100–20
	CAP**3621A**	28,400	TDR&TXV	15.2			12.2	29,000	3.82	16,900	2.54	8.5	58CV(A,X)110–20
	CAP**3621A**	28,600	TDR&TXV	15.2			12.2	29,400	3.90	17,200	2.56	8.5	58PH*090–16
	CAP**3621A**	28,400	TDR&TXV	15.2			12.5	28,800	3.90	16,700	2.56	8.5	OVLAAB048112
	CNPF*3618A**	28,200	TXV		13.5		11.2	30,000	3.68	18,000	2.44	8.2	
	CNPH*3017A**	28,200	TXV		13.5		11.2	30,000	3.68	18,000	2.44	8.2	
30–30	CNPH*3017A**	28,000	TDR&TXV	14.5			12.0	29,000	3.74	17,000	2.50	8.2	58MVB040–14
	CNPH*3017A**	28,400	TDR&TXV	15.0			12.2	29,200	3.82	17,000	2.54	8.2	58MV(B,C)060–14
	CNPH*3017A**	28,000	TDR&TXV	15.0			12.0	29,000	3.74	16,900	2.50	8.2	58MV(B,C)080–14
	CNPH*3017A**	28,200	TDR&TXV	15.0			12.2	29,000	3.76	16,900	2.52	8.2	58MV(B,C)080–20
	CNPH*3017A**	28,000	TDR&TXV	15.0			12.0	28,800	3.72	16,800	2.48	8.2	58MV(B,C)100–20
	CNPH*3017A**	28,200	TDR&TXV	15.0			12.2	29,000	3.80	16,900	2.52	8.2	58MV(B,C)120–20
	CNPH*3017A**	28,200	TDR&TXV	14.5			12.0	29,000	3.76	17,000	2.50	8.2	58CV(A,X)070–12
	CNPH*3017A**	28,200	TDR&TXV	15.0			12.2	29,000	3.78	16,800	2.52	8.2	58CV(A,X)090–16
	CNPH*3017A**	28,200	TDR&TXV	15.0			12.2	29,000	3.80	16,900	2.52	8.2	58CV(A,X)110–20
	CNPH*3017A**	28,200	TDR&TXV	15.0			12.2	29,000	3.80	16,900	2.52	8.2	58CV(A,X)135–22
	CNPH*3017A**	28,200	TDR&TXV	15.2			12.2	29,000	3.80	16,800	2.54	8.2	58CV(A,X)155–22
	CNPH*3017A**	28,200	TDR&TXV	14.5			12.0	29,400	3.78	17,200	2.50	8.2	58PH*070–16
	CNPH*3017A**	28,400	TDR&TXV	15.0			12.2	29,200	3.80	17,100	2.52	8.2	58PH*090–16
	CNPH*3017A**	28,600	TDR&TXV	15.2			12.2	29,200	3.86	17,100	2.56	8.5	58MEB040–12
	CNPH*3017A**	28,600	TDR&TXV	15.0			12.2	29,400	3.86	17,100	2.56	8.5	58MEC060–12
	CNPH*3017A**	28,400	TDR&TXV	15.0			12.2	29,200	3.84	17,000	2.54	8.5	58MEC080–12
	CNPH*3017A**	28,600	TDR&TXV	15.0			12.2	29,400	3.88	17,300	2.56	8.5	58MEC080–16
	CNPH*3017A**	28,200	TDR&TXV	14.0			11.7	29,400	3.72	17,300	2.48	8.2	58HDV040––12
	CNPH*3017A**	28,400	TDR&TXV	14.5			12.0	29,600	3.76	17,400	2.50	8.2	58HDV060––12
	CNPH*3017A**	28,000	TDR&TXV	15.0			12.0	28,800	3.72	16,800	2.48	8.2	58VMR105–12
	CNPH*3017A**	28,400	TDR&TXV	15.0			12.0	29,200	3.80	17,100	2.52	8.2	58VLR105–12
	CNPH*3017A**	28,200	TDR&TXV	14.5			12.0	28,800	3.80	16,800	2.50	8.2	OVMAAB036098
	CNPH*3017A**	28,200	TDR&TXV	15.0			12.2	28,800	3.80	16,700	2.52	8.2	OVLAAB036098
	CNPH*3017A**	28,200	TDR&TXV	15.2			12.2	28,600	3.86	16,600	2.54	8.5	OVMAAB042112
	CNPH*3017A**	28,400	TDR&TXV	15.0			12.2	29,000	3.86	16,800	2.54	8.5	OVLAAB048112
	CNPH*3117A**	28,800	TDR&TXV	14.5			12.0	29,800	3.88	17,500	2.54	8.5	58HDV040––12
	CNPH*3117A**	29,000	TDR&TXV	14.5			12.0	29,800	3.94	17,600	2.56	8.5	58HDV060––12
	CNPH*3117A**	28,800	TDR&TXV	15.2			12.2	29,200	3.94	17,000	2.56	8.5	OVMAAB036098
	CNPH*3117A**	28,800	TDR&TXV	15.2			12.5	29,000	3.96	16,900	2.58	8.5	OVLAAB036098
	CNPH*3117A**	29,000	TDR&TXV	15.5			12.7	29,000	4.02	16,800	2.62	8.5	OVMAAB042112
	CNPH*3117A**	29,000	TDR&TXV	15.5			12.5	29,200	4.02	17,000	2.60	8.5	OVLAAB048112
	CNPH*3617A**	28,200	TXV		13.5		11.2	30,000	3.68	18,000	2.44	8.2	
	CNPH*3617A**	28,000	TDR&TXV	14.5			12.0	29,000	3.74	17,000	2.50	8.2	58MVB040–14
	CNPH*3617A**	28,400	TDR&TXV	15.0			12.2	29,200	3.82	17,000	2.54	8.2	58MV(B,C)060–14
	CNPH*3617A**	28,000	TDR&TXV	15.0			12.0	29,000	3.74	16,900	2.50	8.2	58MV(B,C)080–14
	CNPH*3617A**	28,200	TDR&TXV	15.0			12.2	29,000	3.76	16,900	2.52	8.2	58MV(B,C)080–20
	CNPH*3617A**	28,000	TDR&TXV	15.0			12.0	28,800	3.72	16,800	2.48	8.2	58MV(B,C)100–20
	CNPH*3617A**	28,200	TDR&TXV	15.0			12.2	29,000	3.80	16,900	2.52	8.2	58MV(B,C)120–20
	CNPH*3617A**	28,200	TDR&TXV	14.5			12.0	29,000	3.76	17,000	2.50	8.2	58CV(A,X)070–12
	CNPH*3617A**	28,200	TDR&TXV	15.0			12.2	29,000	3.78	16,800	2.52	8.2	58CV(A,X)090–16
	CNPH*3617A**	28,200	TDR&TXV	15.0			12.2	29,000	3.80	16,900	2.52	8.2	58CV(A,X)110–20
	CNPH*3617A**	28,200	TDR&TXV	15.0			12.2	29,000	3.80	16,900	2.52	8.2	58CV(A,X)135–22
	CNPH*3617A**	28,200	TDR&TXV	15.2			12.2	29,000	3.80	16,800	2.54	8.2	58CV(A,X)155–22

See notes on page 26

COMBINATION RATINGS CONTINUED

Unit Size – Series	Indoor Model	Clg Cap.	ARI Standard Ratings										Furnace Model
			Cooling					Heating					
								High Temp		Low Temp			
			Factory Enhance	Std. Rating	SEER TDR	PU-RON TXV	EER	E Cap.	E COP	H Cap.	H COP	HSPF	
	CNPH*3617A**	28,200	TDR&TXV	14.5			12.0	29,400	3.78	17,200	2.50	8.2	58PH*070–16
	CNPH*3617A**	28,400	TDR&TXV	15.0			12.2	29,200	3.80	17,100	2.52	8.2	58PH*090–16
	CNPH*3617A**	28,600	TDR&TXV	15.2			12.2	29,200	3.86	17,100	2.56	8.5	58MEB040–12
	CNPH*3617A**	28,600	TDR&TXV	15.0			12.2	29,400	3.86	17,100	2.56	8.5	58MEC060–12
	CNPH*3617A**	28,400	TDR&TXV	15.0			12.2	29,200	3.84	17,000	2.54	8.5	58MEC080–12
	CNPH*3617A**	28,600	TDR&TXV	15.0			12.2	29,400	3.88	17,300	2.56	8.5	58MEC080–16
	CNPH*3617A**	28,200	TDR&TXV	14.0			11.7	29,400	3.72	17,300	2.48	8.2	58HDV040– –12
	CNPH*3617A**	28,400	TDR&TXV	14.5			12.0	29,600	3.76	17,400	2.50	8.2	58HDV060– –12
	CNPH*3617A**	28,000	TDR&TXV	15.0			12.0	28,800	3.72	16,800	2.48	8.2	58VMR105–12
	CNPH*3617A**	28,400	TDR&TXV	15.0			12.0	29,200	3.80	17,100	2.52	8.2	58VLR105–12
	CNPH*3617A**	28,200	TDR&TXV	14.5			12.0	28,800	3.80	16,800	2.50	8.2	OVMAAB036098
	CNPH*3617A**	28,200	TDR&TXV	15.0			12.2	28,800	3.80	16,700	2.52	8.2	OVLAAB036098
	CNPH*3617A**	28,200	TDR&TXV	15.2			12.2	28,600	3.86	16,600	2.54	8.5	OVMAAB042112
	CNPH*3617A**	28,400	TDR&TXV	15.0			12.2	29,000	3.86	16,800	2.54	8.5	OVLAAB048112
	CNPV*3014A**	28,200	TXV		13.5		11.2	30,000	3.68	18,000	2.44	8.2	
	CNPV*3014A**	28,000	TDR&TXV	14.5			12.0	29,200	3.72	17,000	2.48	8.2	58CV(A,X)070–12
	CNPV*3017A**	28,200	TXV		13.5		11.2	30,000	3.68	18,000	2.44	8.2	
	CNPV*3017A**	28,400	TDR&TXV	15.0			12.2	29,200	3.82	17,000	2.54	8.2	58MV(B,C)060–14
	CNPV*3017A**	28,200	TDR&TXV	15.0			12.2	29,000	3.78	16,800	2.52	8.2	58CV(A,X)090–16
	CNPV*3017A**	28,200	TDR&TXV	14.5			12.0	29,400	3.78	17,200	2.50	8.2	58PH*070–16
	CNPV*3017A**	28,600	TDR&TXV	15.2			12.2	29,200	3.86	17,100	2.56	8.5	58MEB040–12
	CNPV*3017A**	28,600	TDR&TXV	15.0			12.2	29,400	3.86	17,100	2.56	8.5	58MEC060–12
	CNPV*3017A**	28,400	TDR&TXV	15.0			12.2	29,200	3.84	17,000	2.54	8.5	58MEC080–12
	CNPV*3017A**	28,600	TDR&TXV	15.0			12.2	29,400	3.88	17,300	2.56	8.5	58MEC080–16
	CNPV*3017A**	28,000	TDR&TXV	15.0			12.0	28,800	3.72	16,800	2.48	8.2	58VMR105–12
	CNPV*3017A**	28,400	TDR&TXV	15.0			12.0	29,200	3.80	17,100	2.52	8.2	58VLR105–12
	CNPV*3017A**	28,200	TDR&TXV	14.5			12.0	28,800	3.80	16,800	2.50	8.2	OVMAAB036098
	CNPV*3017A**	28,200	TDR&TXV	15.0			12.2	28,800	3.80	16,700	2.52	8.2	OVLAAB036098
	CNPV*3017A**	28,200	TDR&TXV	15.2			12.2	28,600	3.86	16,600	2.54	8.5	OVMAAB042112
	CNPV*3117A**	29,000	TXV		13.7		11.3	30,000	3.82	18,200	2.48	8.5	
	CNPV*3117A**	29,000	TDR&TXV	15.5			12.5	29,400	3.96	17,100	2.60	8.5	58MV(B,C)060–14
	CNPV*3117A**	28,800	TDR&TXV	15.5			12.5	29,200	3.94	17,000	2.58	8.5	58CV(A,X)090–16
	CNPV*3117A**	29,000	TDR&TXV	15.0			12.2	29,600	3.94	17,400	2.56	8.5	58PH*070–16
	CNPV*3117A**	29,200	TDR&TXV	15.5			12.5	29,600	4.02	17,300	2.62	8.7	58MEB040–12
	CNPV*3117A**	29,200	TDR&TXV	15.5			12.5	29,600	4.04	17,300	2.62	8.7	58MEC060–12
	CNPV*3117A**	29,200	TDR&TXV	15.5			12.5	29,600	4.00	17,200	2.62	8.7	58MEC080–12
	CNPV*3117A**	29,400	TDR&TXV	15.2			12.5	29,800	4.04	17,400	2.62	8.7	58MEC080–16
	CNPV*3117A**	28,600	TDR&TXV	15.2			12.2	29,200	3.86	17,000	2.56	8.5	58VMR105–12
	CNPV*3117A**	29,000	TDR&TXV	15.2			12.2	29,400	3.94	17,200	2.58	8.5	58VLR105–12
	CNPV*3117A**	28,800	TDR&TXV	15.2			12.2	29,200	3.94	17,000	2.56	8.5	OVMAAB036098
	CNPV*3117A**	28,800	TDR&TXV	15.2			12.5	29,000	3.96	16,900	2.58	8.5	OVLAAB036098
	CNPV*3117A**	29,000	TDR&TXV	15.5			12.7	29,000	4.02	16,800	2.62	8.5	OVMAAB042112
30–30	CNPV*3617A**	28,200	TXV		13.5		11.2	30,000	3.68	18,000	2.44	8.2	
	CNPV*3617A**	28,400	TDR&TXV	15.0			12.2	29,200	3.82	17,000	2.54	8.5	58MV(B,C)060–14
	CNPV*3617A**	28,200	TDR&TXV	15.0			12.2	29,000	3.78	16,800	2.52	8.2	58CV(A,X)090–16
	CNPV*3617A**	28,200	TDR&TXV	14.5			12.0	29,400	3.78	17,200	2.50	8.2	58PH*070–16
	CNPV*3617A**	28,600	TDR&TXV	15.2			12.2	29,200	3.86	17,100	2.56	8.5	58MEB040–12
	CNPV*3617A**	28,600	TDR&TXV	15.0			12.2	29,400	3.86	17,100	2.56	8.5	58MEC060–12
	CNPV*3617A**	28,400	TDR&TXV	15.0			12.2	29,200	3.84	17,000	2.54	8.5	58MEC080–12
	CNPV*3617A**	28,600	TDR&TXV	15.0			12.2	29,400	3.88	17,300	2.56	8.5	58MEC080–16
	CNPV*3617A**	28,000	TDR&TXV	15.0			12.0	29,000	3.72	16,800	2.48	8.2	58VMR105–12
	CNPV*3617A**	28,400	TDR&TXV	15.0			12.0	29,200	3.80	17,100	2.52	8.2	58VLR105–12
	CNPV*3617A**	28,200	TDR&TXV	14.5			12.0	28,800	3.80	16,800	2.50	8.2	OVMAAB036098
	CNPV*3617A**	28,200	TDR&TXV	15.0			12.2	28,800	3.80	16,700	2.52	8.2	OVLAAB036098
	CNPV*3617A**	28,200	TDR&TXV	15.2			12.2	28,600	3.86	16,600	2.54	8.5	OVMAAB042112
	CNPV*3621A**	28,200	TXV		13.5		11.2	30,000	3.68	18,000	2.44	8.2	
	CNPV*3621A**	28,000	TDR&TXV	15.0			12.0	29,000	3.74	16,900	2.50	8.2	58MV(B,C)080–14
	CNPV*3621A**	28,200	TDR&TXV	15.0			12.2	29,000	3.76	16,900	2.52	8.2	58MV(B,C)080–20
	CNPV*3621A**	28,000	TDR&TXV	15.0			12.2	28,800	3.72	16,800	2.48	8.2	58MV(B,C)100–20
	CNPV*3621A**	28,200	TDR&TXV	15.0			12.2	29,000	3.80	16,900	2.52	8.2	58CV(A,X)110–20
	CNPV*3621A**	28,400	TDR&TXV	15.0			12.2	29,200	3.82	17,100	2.54	8.5	58PH*090–16
	CNPV*3621A**	28,400	TDR&TXV	15.0			12.2	29,000	3.86	16,800	2.54	8.5	OVLAAB048112
	CNPV*3717A**	29,200	TXV		14.0		11.5	30,000	3.88	18,200	2.50	8.5	
	CNPV*3717A**	29,400	TDR&TXV	15.5			12.7	29,600	4.04	17,200	2.62	8.7	58MV(B,C)060–14
	CNPV*3717A**	29,200	TDR&TXV	15.5			12.7	29,400	4.00	17,100	2.62	8.5	58CV(A,X)090–16
	CNPV*3717A**	29,400	TDR&TXV	15.2			12.2	29,800	4.02	17,500	2.60	8.7	58PH*070–16
	CNPV*3717A**	29,600	TDR&TXV	16.0			13.0	29,600	4.12	17,300	2.66	9.0	58MEB040–12
	CNPV*3717A**	29,600	TDR&TXV	15.5			12.7	29,800	4.12	17,400	2.66	9.0	58MEC060–12
	CNPV*3717A**	29,600	TDR&TXV	15.5			12.7	29,600	4.10	17,300	2.64	8.8	58MEC080–12
	CNPV*3717A**	29,800	TDR&TXV	15.5			12.7	30,000	4.14	17,500	2.66	9.0	58MEC080–16
	CNPV*3717A**	28,800	TDR&TXV	15.5			12.5	29,200	3.94	17,000	2.58	8.5	58VMR105–12
	CNPV*3717A**	29,200	TDR&TXV	15.5			12.5	29,600	4.02	17,300	2.62	8.7	58VLR105–12
	CNPV*3717A**	29,200	TDR&TXV	15.2			12.5	29,200	4.02	17,000	2.60	8.5	OVMAAB036098
	CNPV*3717A**	29,200	TDR&TXV	15.5			12.7	29,200	4.04	16,900	2.60	8.7	OVLAAB036098
	CNPV*3717A**	29,200	TDR&TXV	16.0			13.0	29,000	4.10	16,800	2.64	8.8	OVMAAB042112
	CSPH*3012A**	28,400	TXV		13.7		11.2	30,000	3.72	18,000	2.44	8.2	
	CSPH*3012A**	28,200	TDR&TXV	14.5			12.0	29,200	3.74	17,000	2.50	8.2	58MVB040–14
	CSPH*3012A**	28,400	TDR&TXV	15.0			12.2	29,200	3.82	17,000	2.54	8.5	58MV(B,C)060–14
	CSPH*3012A**	28,200	TDR&TXV	14.5			12.0	29,000	3.74	17,000	2.50	8.2	58MV(B,C)080–14
	CSPH*3012A**	28,200	TDR&TXV	15.0			12.2	29,200	3.78	17,000	2.52	8.2	58MV(B,C)080–20
	CSPH*3012A**	28,000	TDR&TXV	15.0			12.0	29,000	3.72	16,900	2.48	8.2	58MV(B,C)100–20
	CSPH*3012A**	28,400	TDR&TXV	15.0			12.2	29,000	3.80	16,900	2.52	8.2	58MV(B,C)120–20
	CSPH*3012A**	28,200	TDR&TXV	14.5			12.0	29,200	3.76	17,000	2.50	8.2	58CV(A,X)070–12
	CSPH*3012A**	28,200	TDR&TXV	15.0			12.2	29,000	3.78	16,900	2.52	8.2	58CV(A,X)090–16
	CSPH*3012A**	28,400	TDR&TXV	15.0			12.2	29,200	3.80	17,000	2.52	8.2	58CV(A,X)110–20

See notes on page 26

COMBINATION RATINGS CONTINUED

Unit Size – Series	Indoor Model	Clg Cap.	ARI Standard Ratings										Furnace Model
			Cooling					Heating					
								High Temp		Low Temp			
			Factory Enhance	Std. Rating	SEER TDR	PU-RON TXV	EER	E Cap.	E COP	H Cap.	H COP	HSPF	
30–30	CSPH*3012A**	28,400	TDR&TXV	15.0			12.2	29,000	3.80	16,900	2.52	8.2	58CV(A,X)135–22
	CSPH*3012A**	28,400	TDR&TXV	15.0			12.2	29,000	3.80	16,900	2.54	8.2	58CV(A,X)155–22
	CSPH*3012A**	28,400	TDR&TXV	14.5			12.0	29,400	3.76	17,200	2.50	8.2	58PH*070–16
	CSPH*3012A**	28,400	TDR&TXV	15.0			12.2	29,200	3.78	17,100	2.52	8.2	58PH*090–16
	CSPH*3012A**	28,600	TDR&TXV	15.0			12.2	29,200	3.84	17,100	2.54	8.5	58MEB040–12
	CSPH*3012A**	28,600	TDR&TXV	15.0			12.2	29,400	3.86	17,100	2.54	8.5	58MEC060–12
	CSPH*3012A**	28,400	TDR&TXV	15.0			12.2	29,200	3.84	17,000	2.54	8.5	58MEC080–12
	CSPH*3012A**	28,600	TDR&TXV	15.0			12.2	29,400	3.86	17,300	2.54	8.5	58MEC080–16
	CSPH*3012A**	28,200	TDR&TXV	14.0			11.7	29,400	3.72	17,300	2.46	8.2	58HDV040––12
	CSPH*3012A**	28,400	TDR&TXV	14.5			12.0	29,600	3.76	17,400	2.48	8.2	58HDV060––12
	CSPH*3012A**	28,000	TDR&TXV	14.5			12.0	29,000	3.72	16,900	2.48	8.2	58VMR105–12
	CSPH*3012A**	28,400	TDR&TXV	14.5			12.0	29,400	3.80	17,200	2.52	8.2	58VLR105–12
	CSPH*3012A**	28,200	TDR&TXV	14.5			12.0	29,000	3.84	16,900	2.52	8.2	OVMAAB036098
	CSPH*3012A**	28,200	TDR&TXV	15.0			12.0	29,000	3.84	16,800	2.52	8.2	OVLAAB036098
	CSPH*3012A**	28,400	TDR&TXV	15.2			12.2	28,800	3.90	16,800	2.54	8.5	OVMAAB042112
	CSPH*3012A**	28,600	TDR&TXV	15.0			12.2	29,000	3.90	17,000	2.54	8.5	OVLAAB048112
	CSPH*3612A**	28,800	TXV		13.7		11.3	30,000	3.80	18,100	2.48	8.5	
	CSPH*3612A**	28,600	TDR&TXV	15.2			12.2	29,200	3.86	17,100	2.54	8.5	58MVB040–14
	CSPH*3612A**	29,000	TDR&TXV	15.5			12.5	29,400	3.94	17,100	2.58	8.5	58MV(B,C)060–14
	CSPH*3612A**	28,600	TDR&TXV	15.2			12.2	29,200	3.84	17,000	2.54	8.5	58MV(B,C)080–14
	CSPH*3612A**	28,800	TDR&TXV	15.2			12.2	29,200	3.88	17,000	2.56	8.5	58MV(B,C)080–20
	CSPH*3612A**	28,600	TDR&TXV	15.2			12.2	29,000	3.82	16,900	2.54	8.5	58MV(B,C)100–20
	CSPH*3612A**	28,800	TDR&TXV	15.5			12.5	29,200	3.90	17,000	2.58	8.5	58MV(B,C)120–20
	CSPH*3612A**	28,600	TDR&TXV	15.2			12.2	29,200	3.86	17,100	2.54	8.5	58CV(A,X)070–12
	CSPH*3612A**	28,800	TDR&TXV	15.5			12.5	29,200	3.90	17,000	2.56	8.5	58CV(A,X)090–16
	CSPH*3612A**	28,800	TDR&TXV	15.5			12.5	29,200	3.90	17,000	2.58	8.5	58CV(A,X)110–20
	CSPH*3612A**	28,800	TDR&TXV	15.5			12.5	29,200	3.92	17,000	2.58	8.5	58CV(A,X)135–22
	CSPH*3612A**	28,800	TDR&TXV	15.5			12.5	29,200	3.92	17,000	2.58	8.5	58CV(A,X)155–22
	CSPH*3612A**	29,000	TDR&TXV	15.0			12.2	29,600	3.90	17,400	2.56	8.5	58PH*070–16
	CSPH*3612A**	29,000	TDR&TXV	15.2			12.5	29,400	3.96	17,200	2.58	8.5	58PH*090–16
	CSPH*3612A**	29,200	TDR&TXV	15.5			12.5	29,400	4.00	17,200	2.62	8.5	58MEB040–12
	CSPH*3612A**	29,200	TDR&TXV	15.5			12.5	29,600	4.00	17,300	2.62	8.7	58MEC060–12
	CSPH*3612A**	29,200	TDR&TXV	15.5			12.5	29,400	3.98	17,200	2.60	8.7	58MEC080–12
	CSPH*3612A**	29,400	TDR&TXV	15.2			12.5	29,800	4.02	17,400	2.62	8.7	58MEC080–16
	CSPH*3612A**	28,800	TDR&TXV	14.5			12.0	29,600	3.84	17,500	2.52	8.5	58HDV040––12
	CSPH*3612A**	29,000	TDR&TXV	14.5			12.0	29,800	3.90	17,500	2.54	8.5	58HDV060––12
	CSPH*3612A**	28,600	TDR&TXV	15.2			12.2	29,000	3.82	16,900	2.54	8.5	58VMR105–12
	CSPH*3612A**	29,000	TDR&TXV	15.2			12.2	29,400	3.92	17,200	2.56	8.5	58VLR105–12
	CSPH*3612A**	28,800	TDR&TXV	15.0			12.2	29,000	3.92	16,900	2.56	8.5	OVMAAB036098
	CSPH*3612A**	28,800	TDR&TXV	15.2			12.5	29,000	3.92	16,800	2.56	8.5	OVLAAB036098
	CSPH*3612A**	28,800	TDR&TXV	15.5			12.7	28,800	3.98	16,700	2.60	8.5	OVMAAB042112
	CSPH*3612A**	29,000	TDR&TXV	15.2			12.5	29,000	3.98	16,900	2.58	8.5	OVLAAB048112
36–30	*FX4DN(B,F)037	35,200	TDR&TXV	15.0			12.5	35,000	3.88	21,800	2.64	8.7	
	FB4CNF036	33,800	TDR			13.5	11.5	35,000	3.66	21,800	2.50	8.2	
	FB4CNF042	35,200	TDR			14.5	12.0	35,200	3.86	21,800	2.64	8.5	
	FE4AN(B,F)003	34,000	TDR&TXV	14.5			12.0	34,200	3.70	21,200	2.58	8.2	
	FE4ANB006	35,600	TDR&TXV	15.5			13.0	34,400	4.04	21,400	2.72	9.0	
	FE4ANF002	33,800	TDR&TXV	14.0			11.5	34,600	3.68	21,400	2.54	8.2	
	FF1ENP036	33,800	TDR&TXV	13.0			11.0	35,400	3.52	22,400	2.44	8.0	
	FF1ENP037	34,000	TDR&TXV	13.0			11.2	35,400	3.58	22,200	2.48	8.0	
	FV4CN(B,F)003	34,000	TDR&TXV	14.5			12.0	34,200	3.70	21,200	2.58	8.2	
	FV4CNB006	35,600	TDR&TXV	15.5			13.0	34,400	4.04	21,400	2.72	9.0	
	FV4CNF002	33,800	TDR&TXV	14.0			11.5	34,600	3.68	21,400	2.54	8.2	
	FX4DN(B,F)043	35,200	TDR&TXV	15.0			12.0	35,000	3.88	21,800	2.64	8.5	
	FY5BNF036	34,200	TDR			13.5	11.5	35,200	3.66	22,000	2.52	8.2	
	FY5BNF042	34,800	TDR			14.0	11.5	35,400	3.74	22,200	2.56	8.2	
	CAP**3614A**	33,600	TXV		13.0		11.0	35,200	3.52	22,200	2.46	8.0	
	CAP**3614A**	33,400	TDR&TXV	14.0			11.5	34,400	3.58	21,400	2.50	8.0	58CV(A,X)070–12
	CAP**3614A**	33,400	TDR&TXV	13.5			11.0	34,800	3.52	21,800	2.46	8.0	58PH*045–08
	CAP**3617A**	33,800	TXV		13.0		11.0	35,600	3.58	22,400	2.46	8.0	
	CAP**3617A**	33,800	TDR&TXV	14.0			12.0	34,400	3.66	21,400	2.54	8.2	58MV(B,C)060–14
	CAP**3617A**	33,600	TDR&TXV	14.5			12.0	34,200	3.64	21,200	2.54	8.2	58CV(A,X)090–16
	CAP**3617A**	33,600	TDR&TXV	14.0			11.5	34,600	3.60	21,600	2.50	8.0	58PH*070–16
	CAP**3617A**	34,000	TDR&TXV	14.5			12.0	34,400	3.68	21,400	2.56	8.2	58MEB040–12
	CAP**3617A**	34,000	TDR&TXV	14.0			12.0	34,600	3.68	21,400	2.56	8.2	58MEC060–12
	CAP**3617A**	33,800	TDR&TXV	14.5			12.0	34,400	3.68	21,400	2.56	8.2	58MEC080–12
	CAP**3617A**	34,000	TDR&TXV	14.0			12.0	34,600	3.68	21,400	2.56	8.2	58MEC080–16
	CAP**3617A**	33,600	TDR&TXV	13.5			11.3	34,800	3.54	21,800	2.46	8.0	OVMAAB036098
	CAP**3617A**	33,400	TDR&TXV	13.5			11.3	34,600	3.52	21,600	2.46	8.0	OVLAAB036098
	CAP**3617A**	33,600	TDR&TXV	14.0			11.5	34,600	3.60	21,400	2.50	8.0	OVMAAB042112
	CAP**3619A**	33,800	TXV		13.0		11.0	35,600	3.58	22,400	2.46	8.0	
	CAP**3619A**	33,400	TDR&TXV	13.5			11.0	35,000	3.52	21,800	2.46	8.0	58HDV040––12
	CAP**3619A**	33,800	TDR&TXV	13.5			11.5	35,000	3.60	21,800	2.50	8.0	58HDV060––12
	CAP**3621A**	33,800	TXV		13.0		11.0	35,600	3.58	22,400	2.46	8.0	
	CAP**3621A**	33,800	TDR&TXV	14.0			11.5	34,400	3.62	21,400	2.52	8.0	58MV(B,C)080–14
	CAP**3621A**	33,600	TDR&TXV	14.5			12.0	34,200	3.62	21,200	2.54	8.0	58MV(B,C)080–20
	CAP**3621A**	33,800	TDR&TXV	14.5			12.0	34,400	3.66	21,200	2.54	8.0	58MV(B,C)100–20
	CAP**3621A**	33,800	TDR&TXV	14.5			12.0	34,200	3.66	21,200	2.56	8.0	58CV(A,X)110–20
	CAP**3621A**	34,000	TDR&TXV	14.5			12.0	34,400	3.72	21,400	2.58	8.2	58PH*090–16
	CAP**3621A**	34,200	TDR&TXV	14.5			12.0	34,600	3.76	21,400	2.60	8.5	58PH*110–20
	CAP**3621A**	34,000	TDR&TXV	14.5			12.0	34,200	3.72	21,200	2.58	8.2	58MEC100–20
	CAP**3621A**	33,800	TDR&TXV	14.0			11.5	34,800	3.64	21,600	2.52	8.2	OVLAAB048112
	CAP**4221A**	34,000	TXV		13.0		11.0	35,600	3.62	22,400	2.48	8.0	

See notes on page 26

COMBINATION RATINGS CONTINUED

Unit Size – Series	Indoor Model	Cooling Cap.	ARI Standard Ratings										Furnace Model
			Cooling					Heating					
			Factory Enhance	Std. Rating	SEER TDR	PU-RON TXV	EER	High Temp		Low Temp		HSP F	
								E Cap.	E COP	H Cap.	H COP		
	CAP**4221A**	34,000	TDR&TXV	14.0			12.0	34,600	3.66	21,400	2.54	8.2	58MV(B,C)080–14
	CAP**4221A**	34,000	TDR&TXV	14.5			12.0	34,400	3.68	21,400	2.56	8.2	58MV(B,C)080–20
	CAP**4221A**	34,000	TDR&TXV	14.5			12.0	34,400	3.70	21,400	2.56	8.2	58MV(B,C)100–20
	CAP**4221A**	34,000	TDR&TXV	14.5			12.0	34,400	3.70	21,200	2.58	8.2	58CV(A,X)110–20
	CAP**4221A**	34,400	TDR&TXV	14.5			12.0	34,600	3.76	21,400	2.60	8.5	58PH*090–16
	CAP**4221A**	34,400	TDR&TXV	14.5			12.0	34,600	3.80	21,400	2.62	8.5	58PH*110–20
	CAP**4221A**	34,200	TDR&TXV	14.5			12.0	34,400	3.74	21,200	2.60	8.2	58MEC100–20
	CAP**4221A**	34,200	TDR&TXV	14.0			11.7	34,800	3.68	21,800	2.54	8.2	OVLAAB048112
	CAP**4224A**	34,000	TXV		13.0		11.0	35,600	3.62	22,400	2.48	8.0	
	CAP**4224A**	33,800	TDR&TXV	14.0			12.0	34,400	3.64	21,400	2.54	8.2	58MVB040–14
	CAP**4224A**	34,000	TDR&TXV	14.5			12.0	34,200	3.70	21,200	2.58	8.2	58MV(B,C)120–20
	CAP**4224A**	34,000	TDR&TXV	14.5			12.0	34,200	3.72	21,200	2.58	8.2	58CV(A,X)135–22
	CAP**4224A**	34,200	TDR&TXV	15.0			12.5	34,200	3.74	21,000	2.60	8.2	58CV(A,X)155–22
	CAP**4224A**	34,400	TDR&TXV	14.5			12.0	34,800	3.78	21,600	2.60	8.5	58HDV100––20
	CNPF*3618A**	33,800	TXV		13.0		11.0	35,600	3.58	22,400	2.46	8.0	
	CNPH*3617A**	33,800	TXV		13.0		11.0	35,600	3.58	22,400	2.46	8.0	
	CNPH*3617A**	33,400	TDR&TXV	14.0			11.5	34,400	3.56	21,400	2.48	8.0	58MVB040–14
	CNPH*3617A**	33,800	TDR&TXV	14.0			11.5	34,600	3.62	21,400	2.52	8.2	58MV(B,C)060–14
	CNPH*3617A**	33,600	TDR&TXV	14.0			11.5	34,600	3.58	21,400	2.50	8.0	58MV(B,C)080–14
	CNPH*3617A**	33,600	TDR&TXV	14.0			11.5	34,400	3.58	21,400	2.50	8.0	58MV(B,C)080–20
	CNPH*3617A**	33,600	TDR&TXV	14.0			11.5	34,400	3.62	21,400	2.52	8.0	58MV(B,C)100–20
	CNPH*3617A**	33,600	TDR&TXV	14.0			12.0	34,200	3.62	21,200	2.52	8.0	58MV(B,C)120–20
	CNPH*3617A**	33,400	TDR&TXV	14.0			11.5	34,400	3.58	21,400	2.50	8.0	58CV(A,X)070–12
	CNPH*3617A**	33,600	TDR&TXV	14.0			12.0	34,200	3.62	21,200	2.52	8.0	58CV(A,X)090–16
	CNPH*3617A**	33,600	TDR&TXV	14.0			12.0	34,400	3.62	21,200	2.52	8.0	58CV(A,X)110–20
	CNPH*3617A**	33,600	TDR&TXV	14.5			12.0	34,200	3.62	21,200	2.54	8.0	58CV(A,X)135–22
	CNPH*3617A**	33,800	TDR&TXV	14.5			12.0	34,200	3.64	21,200	2.54	8.2	58CV(A,X)155–22
	CNPH*3617A**	33,400	TDR&TXV	13.5			11.2	34,800	3.52	21,800	2.46	8.0	58PH*045–08
	CNPH*3617A**	33,600	TDR&TXV	13.5			11.5	34,600	3.56	21,600	2.48	8.0	58PH*070–16
	CNPH*3617A**	33,800	TDR&TXV	14.5			12.0	34,400	3.64	21,200	2.54	8.2	58PH*090–16
	CNPH*3617A**	33,800	TDR&TXV	14.5			12.0	34,400	3.68	21,200	2.56	8.2	58PH*110–20
	CNPH*3617A**	33,800	TDR&TXV	14.0			12.0	34,400	3.64	21,400	2.54	8.2	58MEB040–12
	CNPH*3617A**	33,800	TDR&TXV	14.0			11.5	34,400	3.64	21,400	2.54	8.2	58MEC060–12
	CNPH*3617A**	33,800	TDR&TXV	14.0			12.0	34,400	3.64	21,400	2.54	8.2	58MEC080–12
	CNPH*3617A**	33,800	TDR&TXV	14.0			11.5	34,400	3.64	21,400	2.54	8.2	58MEC080–16
	CNPH*3617A**	33,600	TDR&TXV	14.5			12.0	34,200	3.62	21,000	2.54	8.0	58MEC100–20
	CNPH*3617A**	33,400	TDR&TXV	13.0			11.0	34,800	3.50	21,800	2.44	8.0	58HDV040––12
	CNPH*3617A**	33,600	TDR&TXV	13.5			11.5	34,800	3.56	21,800	2.48	8.0	58HDV060––12
	CNPH*3617A**	34,000	TDR&TXV	14.0			11.5	35,000	3.68	21,800	2.54	8.2	58HDV080––20
	CNPH*3617A**	33,800	TDR&TXV	14.0			11.5	34,600	3.64	21,600	2.54	8.2	58HDV100––20
	CNPH*3617A**	33,400	TDR&TXV	13.2			11.2	34,800	3.52	21,800	2.44	8.0	OVMAAB036098
	CNPH*3617A**	33,400	TDR&TXV	13.5			11.3	34,600	3.50	21,600	2.44	8.0	OVLAAB036098
36–30	CNPH*3617A**	33,600	TDR&TXV	13.7			11.5	34,600	3.56	21,600	2.48	8.0	OVMAAB042112
	CNPH*3617A**	33,800	TDR&TXV	13.5			11.3	34,800	3.58	21,800	2.48	8.0	OVLAAB048112
	CNPH*3617A**	34,400	TDR&TXV	14.0			11.5	35,200	3.72	22,000	2.56	8.2	OVLAAB060154
	CNPH*4221A**	34,200	TXV		13.0		11.0	35,600	3.64	22,600	2.50	8.0	
	CNPH*4221A**	33,800	TDR&TXV	14.0			11.5	34,600	3.64	21,400	2.52	8.2	58MVB040–14
	CNPH*4221A**	34,200	TDR&TXV	14.5			12.0	34,600	3.72	21,600	2.56	8.2	58MV(B,C)060–14
	CNPH*4221A**	34,000	TDR&TXV	14.0			11.5	34,600	3.66	21,600	2.54	8.2	58MV(B,C)080–14
	CNPH*4221A**	34,000	TDR&TXV	14.0			12.0	34,400	3.66	21,400	2.54	8.2	58MV(B,C)080–20
	CNPH*4221A**	34,200	TDR&TXV	14.5			12.0	34,600	3.70	21,400	2.56	8.2	58MV(B,C)100–20
	CNPH*4221A**	34,000	TDR&TXV	14.5			12.0	34,400	3.70	21,200	2.56	8.2	58MV(B,C)120–20
	CNPH*4221A**	33,800	TDR&TXV	14.0			11.5	34,600	3.64	21,400	2.54	8.2	58CV(A,X)070–12
	CNPH*4221A**	34,000	TDR&TXV	14.5			12.0	34,400	3.68	21,200	2.56	8.2	58CV(A,X)090–16
	CNPH*4221A**	34,000	TDR&TXV	14.5			12.0	34,400	3.70	21,400	2.56	8.2	58CV(A,X)110–20
	CNPH*4221A**	34,000	TDR&TXV	14.5			12.0	34,400	3.70	21,200	2.58	8.2	58CV(A,X)135–22
	CNPH*4221A**	34,200	TDR&TXV	14.5			12.0	34,400	3.74	21,200	2.58	8.2	58CV(A,X)155–22
	CNPH*4221A**	33,800	TDR&TXV	13.5			11.2	35,000	3.60	22,000	2.50	8.0	58PH*045–08
	CNPH*4221A**	34,000	TDR&TXV	14.0			11.5	34,800	3.66	21,600	2.52	8.2	58PH*070–16
	CNPH*4221A**	34,200	TDR&TXV	14.5			12.0	34,600	3.74	21,400	2.58	8.2	58PH*090–16
	CNPH*4221A**	34,400	TDR&TXV	14.5			12.0	34,600	3.78	21,400	2.60	8.5	58PH*110–20
	CNPH*4221A**	34,200	TDR&TXV	14.5			12.0	34,600	3.74	21,400	2.58	8.2	58MEB040–12
	CNPH*4221A**	34,200	TDR&TXV	14.5			12.0	34,600	3.74	21,600	2.58	8.2	58MEC060–12
	CNPH*4221A**	34,200	TDR&TXV	14.5			12.0	34,600	3.72	21,400	2.58	8.2	58MEC080–12
	CNPH*4221A**	34,200	TDR&TXV	14.5			12.0	34,600	3.74	21,600	2.58	8.5	58MEC080–16
	CNPH*4221A**	34,200	TDR&TXV	14.5			12.0	34,400	3.72	21,200	2.58	8.2	58MEC100–20
	CNPH*4221A**	33,800	TDR&TXV	13.5			11.0	35,000	3.58	22,000	2.48	8.0	58HDV040––12
	CNPH*4221A**	34,000	TDR&TXV	14.0			11.5	35,000	3.66	22,000	2.52	8.2	58HDV060––12
	CNPH*4221A**	34,600	TDR&TXV	14.0			11.5	35,200	3.76	22,000	2.58	8.5	58HDV080––20
	CNPH*4221A**	34,400	TDR&TXV	14.5			12.0	34,800	3.74	21,600	2.58	8.2	58HDV100––20
	CNPH*4221A**	33,800	TDR&TXV	13.7			11.3	34,800	3.60	21,800	2.48	8.0	OVMAAB036098
	CNPH*4221A**	33,800	TDR&TXV	13.7			11.3	34,800	3.58	21,800	2.48	8.0	OVLAAB036098
	CNPH*4221A**	34,000	TDR&TXV	14.0			11.7	34,600	3.64	21,600	2.52	8.2	OVMAAB042112
	CNPH*4221A**	34,200	TDR&TXV	13.7			11.5	35,000	3.66	21,800	2.52	8.2	OVLAAB048112
	CNPH*4221A**	34,800	TDR&TXV	14.0			11.7	35,200	3.82	22,000	2.60	8.5	OVLAAB060154
	CNPH*4321A**	34,800	TDR&TXV	14.0			11.5	35,200	3.78	22,200	2.56	8.5	58HDV040––12
	CNPH*4321A**	35,200	TDR&TXV	14.0			12.0	35,200	3.86	22,200	2.62	8.5	58HDV060––12
	CNPH*4321A**	35,800	TDR&TXV	14.5			12.0	35,200	3.98	22,200	2.68	8.7	58HDV080––20
	CNPH*4321A**	35,600	TDR&TXV	15.0			12.5	35,000	3.98	22,000	2.68	8.7	58HDV100––20
	CNPH*4321A**	34,800	TDR&TXV	14.0			11.7	35,200	3.78	22,000	2.56	8.5	OVMAAB036098
	CNPH*4321A**	34,800	TDR&TXV	14.0			11.7	35,200	3.76	22,000	2.56	8.2	OVLAAB036098
	CNPH*4321A**	35,000	TDR&TXV	14.5			12.0	35,000	3.84	21,800	2.60	8.5	OVMAAB042112
	CNPH*4321A**	35,200	TDR&TXV	14.5			12.0	35,400	3.86	22,000	2.62	8.5	OVLAAB048112
	CNPH*4321A**	36,000	TDR&TXV	14.5			12.2	35,600	4.02	22,200	2.68	8.7	OVLAAB060154
	CNPV*3617A**	33,800	TXV		13.0		11.0	35,600	3.58	22,400	2.46	8.0	

See notes on page 26

COMBINATION RATINGS CONTINUED

Unit Size – Series	Indoor Model	Cooling Cap.	ARI Standard Ratings										Furnace Model
			Cooling					Heating					
								High Temp		Low Temp			
			Factory Enhance	Std. Rating	SEER TDR	PU-RON TXV	EER	E Cap.	E COP	H Cap.	H COP	HSP F	
	CNPV*3617A**	33,800	TDR&TXV	14.0			11.5	34,600	3.62	21,400	2.52	8.2	58MV(B,C)060–14
	CNPV*3617A**	33,600	TDR&TXV	14.0			12.0	34,200	3.62	21,200	2.52	8.0	58CV(A,X)090–16
	CNPV*3617A**	33,600	TDR&TXV	13.5			11.5	34,600	3.56	21,600	2.48	8.0	58PH*070–16
	CNPV*3617A**	33,800	TDR&TXV	14.0			12.0	34,400	3.64	21,400	2.54	8.2	58MEB040–12
	CNPV*3617A**	33,800	TDR&TXV	14.0			11.5	34,400	3.64	21,400	2.54	8.2	58MEC060–12
	CNPV*3617A**	33,800	TDR&TXV	14.0			12.0	34,400	3.64	21,400	2.54	8.2	58MEC080–12
	CNPV*3617A**	33,800	TDR&TXV	14.0			11.5	34,400	3.64	21,400	2.54	8.2	58MEC080–16
	CNPV*3617A**	33,400	TDR&TXV	13.2			11.2	34,800	3.52	21,800	2.44	8.0	OVMAAB036098
	CNPV*3617A**	33,400	TDR&TXV	13.5			11.3	34,600	3.50	21,600	2.44	8.0	OVLAAB036098
	CNPV*3617A**	33,600	TDR&TXV	13.7			11.5	34,600	3.56	21,600	2.48	8.0	OVMAAB042112
	CNPV*3621A**	33,800	TXV		13.0		11.0	35,600	3.58	22,400	2.46	8.0	
	CNPV*3621A**	33,600	TDR&TXV	14.0			11.5	34,400	3.58	21,400	2.50	8.0	58MV(B,C)080–14
	CNPV*3621A**	33,600	TDR&TXV	14.0			11.5	34,400	3.60	21,400	2.52	8.0	58MV(B,C)080–20
	CNPV*3621A**	33,800	TDR&TXV	14.0			11.5	34,400	3.62	21,400	2.52	8.0	58MV(B,C)100–20
	CNPV*3621A**	33,600	TDR&TXV	14.0			12.0	34,400	3.62	21,200	2.54	8.0	58CV(A,X)110–20
	CNPV*3621A**	33,800	TDR&TXV	14.5			12.0	34,400	3.66	21,200	2.54	8.2	58PH*090–16
	CNPV*3621A**	34,000	TDR&TXV	14.5			12.0	34,400	3.68	21,200	2.56	8.2	58PH*110–20
	CNPV*3621A**	33,600	TDR&TXV	14.5			12.0	34,200	3.64	21,000	2.54	8.2	58MEC100–20
	CNPV*3621A**	33,800	TDR&TXV	13.7			11.3	34,800	3.58	21,800	2.48	8.0	OVLAAB048112
	CNPV*3717A**	35,200	TXV		13.5		11.5	36,000	3.80	22,800	2.56	8.5	
	CNPV*3717A**	35,200	TDR&TXV	14.5			12.0	35,000	3.90	21,800	2.64	8.5	58MV(B,C)060–14
	CNPV*3717A**	35,000	TDR&TXV	15.0			12.5	34,800	3.88	21,600	2.64	8.5	58CV(A,X)090–16
	CNPV*3717A**	35,000	TDR&TXV	14.5			12.0	35,200	3.84	22,000	2.60	8.5	58PH*070–16
	CNPV*3717A**	35,200	TDR&TXV	15.0			12.5	35,000	3.92	21,800	2.66	8.5	58MEB040–12
	CNPV*3717A**	35,400	TDR&TXV	15.0			12.0	35,200	3.94	21,800	2.66	8.5	58MEC060–12
	CNPV*3717A**	35,200	TDR&TXV	15.0			12.5	35,000	3.92	21,800	2.66	8.5	58MEC080–12
	CNPV*3717A**	35,200	TDR&TXV	15.0			12.0	35,200	3.92	21,800	2.66	8.5	58MEC080–16
	CNPV*3717A**	34,800	TDR&TXV	14.0			11.7	35,400	3.76	22,000	2.56	8.2	OVMAAB036098
	CNPV*3717A**	34,600	TDR&TXV	14.0			11.7	35,200	3.76	22,000	2.56	8.2	OVLAAB036098
	CNPV*3717A**	35,000	TDR&TXV	14.5			12.0	35,200	3.82	21,800	2.60	8.5	OVMAAB042112
	CNPV*4217A**	34,400	TXV		13.0		11.0	35,800	3.68	22,600	2.52	8.2	
	CNPV*4217A**	34,400	TDR&TXV	14.5			12.0	34,800	3.76	21,600	2.58	8.5	58MV(B,C)060–14
	CNPV*4217A**	34,200	TDR&TXV	14.5			12.0	34,600	3.74	21,400	2.58	8.2	58CV(A,X)090–16
	CNPV*4217A**	34,200	TDR&TXV	14.0			11.5	35,000	3.70	21,800	2.56	8.2	58PH*070–16
	CNPV*4217A**	34,600	TDR&TXV	14.5			12.0	34,800	3.78	21,600	2.60	8.5	58MEB040–12
	CNPV*4217A**	34,600	TDR&TXV	14.5			12.0	34,800	3.78	21,600	2.60	8.5	58MEC060–12
	CNPV*4217A**	34,400	TDR&TXV	14.5			12.0	34,800	3.78	21,600	2.60	8.5	58MEC080–12
	CNPV*4217A**	34,600	TDR&TXV	14.5			12.0	34,800	3.78	21,600	2.60	8.5	58MEC080–16
	CNPV*4217A**	34,200	TDR&TXV	13.7			11.5	35,000	3.64	22,000	2.50	8.2	OVMAAB036098
	CNPV*4217A**	34,000	TDR&TXV	13.7			11.5	35,000	3.62	21,800	2.50	8.2	OVLAAB036098
	CNPV*4217A**	34,200	TDR&TXV	14.0			11.7	34,800	3.70	21,800	2.54	8.2	OVMAAB042112
	CNPV*4221A**	34,200	TXV		13.0		11.0	35,600	3.64	22,600	2.50	8.2	
36–30	CNPV*4221A**	34,000	TDR&TXV	14.0			11.5	34,600	3.66	21,600	2.54	8.2	58MV(B,C)080–14
	CNPV*4221A**	34,000	TDR&TXV	14.0			12.0	34,400	3.66	21,400	2.54	8.2	58MV(B,C)080–20
	CNPV*4221A**	34,200	TDR&TXV	14.5			12.0	34,600	3.70	21,400	2.56	8.2	58MV(B,C)100–20
	CNPV*4221A**	34,000	TDR&TXV	14.5			12.0	34,400	3.70	21,400	2.56	8.2	58CV(A,X)110–20
	CNPV*4221A**	34,200	TDR&TXV	14.5			12.0	34,600	3.74	21,400	2.58	8.2	58PH*090–16
	CNPV*4221A**	34,400	TDR&TXV	14.5			12.0	34,600	3.78	21,400	2.60	8.5	58PH*110–20
	CNPV*4221A**	34,200	TDR&TXV	14.5			12.0	34,400	3.72	21,200	2.58	8.2	58MEC100–20
	CNPV*4221A**	34,200	TDR&TXV	13.7			11.5	35,000	3.66	21,800	2.52	8.2	OVLAAB048112
	CNPV*4324A**	35,200	TXV	13.5	13.5		11.5	36,000	3.80	22,800	2.56	8.5	
	CNPV*4324A**	34,800	TDR&TXV	14.5			12.0	34,800	3.84	21,600	2.62	8.5	58MVB040–14
	CNPV*4324A**	35,000	TDR&TXV	15.0			12.5	34,800	3.90	21,400	2.66	8.5	58MV(B,C)120–20
	CNPV*4324A**	35,000	TDR&TXV	15.0			12.5	34,600	3.92	21,400	2.68	8.5	58CV(A,X)135–22
	CNPV*4324A**	35,200	TDR&TXV	15.5			12.5	34,600	3.96	21,400	2.70	8.5	58CV(A,X)155–22
	CNPV*4324A**	35,600	TDR&TXV	15.0			12.5	35,400	4.00	22,000	2.70	8.7	58HDV100––20
	CNPV*4324A**	35,000	TDR&TXV	15.0			12.0	35,000	3.88	21,600	2.64	8.5	58MV(B,C)080–14
	CNPV*4324A**	35,000	TDR&TXV	15.0			12.5	34,800	3.88	21,600	2.64	8.5	58MV(B,C)080–20
	CNPV*4821A**	34,600	TDR&TXV	14.5			12.0	34,800	3.78	21,600	2.60	8.5	58MV(B,C)080–14
	CNPV*6024A**	35,000	TDR&TXV	14.5			12.0	34,800	3.84	21,600	2.62	8.5	58MV(B,C)080–14
	CSPH*3612A**	34,600	TXV		13.0		11.0	35,800	3.70	22,600	2.52	8.2	
	CSPH*3612A**	34,200	TDR&TXV	14.0			12.0	34,800	3.70	21,600	2.56	8.2	58MVB040–14
	CSPH*3612A**	34,600	TDR&TXV	14.5			12.0	34,800	3.78	21,600	2.60	8.5	58MV(B,C)060–14
	CSPH*3612A**	34,400	TDR&TXV	14.0			12.0	34,800	3.74	21,600	2.58	8.2	58MV(B,C)080–14
	CSPH*3612A**	34,400	TDR&TXV	14.5			12.0	34,600	3.74	21,400	2.58	8.2	58MV(B,C)080–20
	CSPH*3612A**	34,600	TDR&TXV	14.5			12.0	34,800	3.78	21,600	2.60	8.5	58MV(B,C)100–20
	CSPH*3612A**	34,400	TDR&TXV	14.5			12.0	34,600	3.76	21,400	2.60	8.2	58MV(B,C)120–20
	CSPH*3612A**	34,400	TDR&TXV	14.5			12.0	34,600	3.72	21,600	2.56	8.2	58CV(A,X)070–12
	CSPH*3612A**	34,400	TDR&TXV	14.5			12.0	34,600	3.76	21,400	2.60	8.5	58CV(A,X)090–16
	CSPH*3612A**	34,600	TDR&TXV	14.5			12.0	34,600	3.78	21,400	2.60	8.2	58CV(A,X)110–20
	CSPH*3612A**	34,400	TDR&TXV	14.5			12.0	34,600	3.78	21,400	2.60	8.2	58CV(A,X)135–22
	CSPH*3612A**	34,600	TDR&TXV	14.5			12.0	34,400	3.80	21,400	2.62	8.5	58CV(A,X)155–22
	CSPH*3612A**	34,400	TDR&TXV	13.5			11.5	35,200	3.68	22,000	2.52	8.2	58PH*045–08
	CSPH*3612A**	34,400	TDR&TXV	14.0			11.5	35,000	3.72	21,800	2.56	8.2	58PH*070–16
	CSPH*3612A**	34,800	TDR&TXV	14.5			12.0	34,800	3.82	21,600	2.62	8.5	58PH*090–16
	CSPH*3612A**	34,800	TDR&TXV	14.5			12.0	34,800	3.84	21,600	2.64	8.5	58PH*110–20
	CSPH*3612A**	34,800	TDR&TXV	14.5			12.0	34,800	3.82	21,600	2.62	8.5	58MEB040–12
	CSPH*3612A**	34,800	TDR&TXV	14.5			12.0	34,800	3.82	21,600	2.62	8.5	58MEC060–12
	CSPH*3612A**	34,600	TDR&TXV	14.5			12.0	34,800	3.80	21,600	2.60	8.5	58MEC080–12
	CSPH*3612A**	34,800	TDR&TXV	14.5			12.0	34,800	3.80	21,600	2.62	8.5	58MEC080–16
	CSPH*3612A**	34,600	TDR&TXV	14.5			12.0	34,600	3.80	21,400	2.62	8.5	58MEC100–20
	CSPH*3612A**	34,200	TDR&TXV	13.5			11.0	35,200	3.64	22,000	2.50	8.2	58HDV040––12
	CSPH*3612A**	34,600	TDR&TXV	14.0			11.5	35,200	3.72	22,000	2.56	8.2	58HDV060––12
	CSPH*3612A**	35,000	TDR&TXV	14.0			12.0	35,400	3.84	22,000	2.62	8.5	58HDV080––20
	CSPH*3612A**	34,800	TDR&TXV	14.5			12.0	35,000	3.82	21,800	2.60	8.5	58HDV100––20

See notes on page 26

COMBINATION RATINGS CONTINUED

Unit Size – Series	Indoor Model	Cool-ing Cap.	ARI Standard Ratings										Furnace Model
			Cooling					Heating					
			Factory Enhance	Std. Rating	SEER TDR	PU-RON TXV	EER	High Temp		Low Temp		HSP F	
								E Cap.	E COP	H Cap.	H COP		
36–30	CSPH*3612A**	34,200	TDR&TXV	13.7			11.5	35,000	3.66	22,000	2.52	8.2	OVMAAB036098
	CSPH*3612A**	34,200	TDR&TXV	13.7			11.5	35,000	3.64	21,800	2.50	8.2	OVLAAB036098
	CSPH*3612A**	34,400	TDR&TXV	14.0			11.7	34,800	3.72	21,800	2.54	8.2	OVMAAB042112
	CSPH*3612A**	34,600	TDR&TXV	14.0			11.7	35,200	3.72	22,000	2.54	8.2	OVLAAB048112
	CSPH*3612A**	35,400	TDR&TXV	14.5			12.0	35,400	3.88	22,200	2.62	8.5	OVLAAB060154
	CSPH*4212A**	34,800	TXV		13.0		11.0	36,000	3.74	22,600	2.54	8.2	
	CSPH*4212A**	34,400	TDR&TXV	14.5			12.0	34,800	3.74	21,600	2.58	8.2	58MVB040–14
	CSPH*4212A**	34,800	TDR&TXV	14.5			12.0	34,800	3.82	21,600	2.62	8.5	58MV(B,C)060–14
	CSPH*4212A**	34,600	TDR&TXV	14.5			12.0	34,800	3.78	21,600	2.60	8.5	58MV(B,C)080–14
	CSPH*4212A**	34,600	TDR&TXV	14.5			12.0	34,800	3.78	21,600	2.60	8.5	58MV(B,C)080–20
	CSPH*4212A**	34,800	TDR&TXV	14.5			12.0	34,800	3.82	21,600	2.62	8.5	58MV(B,C)100–20
	CSPH*4212A**	34,600	TDR&TXV	14.5			12.0	34,600	3.80	21,400	2.62	8.5	58MV(B,C)120–20
	CSPH*4212A**	34,600	TDR&TXV	14.5			12.0	34,800	3.76	21,600	2.58	8.5	58CV(A,X)070–12
	CSPH*4212A**	34,600	TDR&TXV	14.5			12.0	34,600	3.80	21,400	2.62	8.5	58CV(A,X)090–16
	CSPH*4212A**	34,800	TDR&TXV	14.5			12.0	34,600	3.82	21,400	2.62	8.5	58CV(A,X)110–20
	CSPH*4212A**	34,800	TDR&TXV	14.5			12.0	34,600	3.82	21,400	2.62	8.5	58CV(A,X)135–22
	CSPH*4212A**	34,800	TDR&TXV	15.0			12.5	34,600	3.84	21,400	2.64	8.5	58CV(A,X)155–22
	CSPH*4212A**	34,600	TDR&TXV	13.5			11.5	35,400	3.72	22,200	2.54	8.2	58PH*045–08
	CSPH*4212A**	34,600	TDR&TXV	14.0			12.0	35,000	3.78	21,800	2.58	8.5	58PH*070–16
	CSPH*4212A**	35,000	TDR&TXV	14.5			12.0	34,800	3.86	21,600	2.64	8.5	58PH*090–16
	CSPH*4212A**	35,200	TDR&TXV	15.0			12.5	34,800	3.90	21,600	2.66	8.5	58PH*110–20
	CSPH*4212A**	35,000	TDR&TXV	14.5			12.0	34,800	3.86	21,600	2.64	8.5	58MEB040–12
	CSPH*4212A**	35,000	TDR&TXV	14.5			12.0	35,000	3.86	21,800	2.64	8.5	58MEC060–12
	CSPH*4212A**	35,000	TDR&TXV	14.5			12.0	34,800	3.84	21,600	2.62	8.5	58MEC080–12
	CSPH*4212A**	35,000	TDR&TXV	14.5			12.0	35,000	3.86	21,800	2.64	8.5	58MEC080–16
	CSPH*4212A**	34,800	TDR&TXV	15.0			12.5	34,600	3.86	21,400	2.64	8.5	58MEC100–20
	CSPH*4212A**	34,400	TDR&TXV	13.5			11.5	35,400	3.68	22,200	2.52	8.2	58HDV040––12
	CSPH*4212A**	34,800	TDR&TXV	14.0			11.5	35,400	3.78	22,000	2.58	8.5	58HDV060––12
	CSPH*4212A**	35,400	TDR&TXV	14.5			12.0	35,400	3.90	22,200	2.64	8.5	58HDV080––20
	CSPH*4212A**	35,000	TDR&TXV	14.5			12.0	35,000	3.88	21,800	2.64	8.5	58HDV100––20
	CSPH*4212A**	34,600	TDR&TXV	14.0			11.7	35,200	3.70	22,000	2.54	8.2	OVMAAB036098
	CSPH*4212A**	34,400	TDR&TXV	14.0			11.7	35,000	3.68	21,800	2.52	8.2	OVLAAB036098
	CSPH*4212A**	34,600	TDR&TXV	14.0			12.0	35,000	3.76	21,800	2.56	8.2	OVMAAB042112
	CSPH*4212A**	34,800	TDR&TXV	14.0			11.7	35,200	3.78	22,000	2.58	8.5	OVLAAB048112
	CSPH*4212A**	35,600	TDR&TXV	14.5			12.0	35,600	3.94	22,200	2.66	8.7	OVLAAB060154
42–30	*FX4DN(B,F)043	42,000	TDR&TXV	15.0			12.5	42,000	3.80	26,800	2.58	8.5	
	FB4CNF042	42,000	TDR			14.5	12.0	42,000	3.78	26,800	2.58	8.5	
	FB4CNF048	42,000	TDR			15.0	12.5	42,000	3.80	26,600	2.60	8.5	
	FE4AN(B,F)003	40,500	TDR&TXV	14.5			12.0	41,500	3.66	25,800	2.52	8.2	
	FV4CN(B,F)003	40,500	TDR&TXV	14.5			12.0	41,500	3.66	25,800	2.52	8.2	
	FX4DN(B,F)049	42,000	TDR&TXV	15.5			13.0	42,000	3.94	26,800	2.66	8.7	
	FY5BNF042	42,000	TDR			14.0	12.0	42,000	3.74	27,000	2.54	8.2	
	FY5BNF048	42,000	TDR			14.5	12.0	42,000	3.78	27,200	2.56	8.5	
	CAP**4221A**	41,000	TXV		13.5		11.5	42,000	3.60	27,200	2.46	8.0	
	CAP**4221A**	40,500	TDR&TXV	14.0			11.5	42,000	3.60	26,200	2.48	8.0	58MV(B,C)080–14
	CAP**4221A**	40,500	TDR&TXV	14.0			12.0	42,000	3.62	26,200	2.50	8.2	58MV(B,C)080–20
	CAP**4221A**	40,500	TDR&TXV	14.0			12.0	41,500	3.60	26,000	2.50	8.0	58MV(B,C)100–20
	CAP**4221A**	40,500	TDR&TXV	14.5			12.0	42,000	3.66	26,000	2.52	8.2	58CV(A,X)110–20
	CAP**4221A**	41,000	TDR&TXV	14.5			12.0	42,000	3.68	26,000	2.54	8.2	58PH*090–16
	CAP**4221A**	41,000	TDR&TXV	14.5			12.0	42,000	3.70	26,000	2.56	8.2	58PH*110–20
	CAP**4221A**	41,000	TDR&TXV	14.5			12.0	42,000	3.70	26,000	2.56	8.2	58MEC100–20
	CAP**4221A**	41,000	TDR&TXV	13.7			11.7	42,000	3.62	26,600	2.50	8.2	OVLAAB048112
	CAP**4224A**	41,000	TXV		13.5		11.5	42,000	3.60	27,200	2.46	8.0	
	CAP**4224A**	40,500	TDR&TXV	14.0			12.0	42,000	3.58	26,200	2.48	8.0	58MVB040–14
	CAP**4224A**	40,500	TDR&TXV	14.5			12.0	41,500	3.64	26,000	2.52	8.2	58MV(B,C)120–20
	CAP**4224A**	41,000	TDR&TXV	14.5			12.0	41,500	3.68	25,800	2.56	8.2	58CV(A,X)135–22
	CAP**4224A**	41,000	TDR&TXV	14.5			12.5	41,500	3.68	25,800	2.56	8.2	58CV(A,X)155–22
	CAP**4224A**	41,000	TDR&TXV	14.5			12.0	42,000	3.70	26,200	2.56	8.2	58PH*135–20
	CAP**4224A**	41,000	TDR&TXV	15.0			12.5	42,000	3.74	26,000	2.58	8.5	58MEC120–20
	CAP**4224A**	41,000	TDR&TXV	14.5			12.0	42,000	3.68	26,200	2.54	8.2	58HDV100––20
	CAP**4817A**	42,000	TXV		13.5		11.5	42,000	3.78	27,600	2.54	8.2	
	CAP**4817A**	42,000	TDR&TXV	14.5			12.0	42,000	3.82	26,600	2.58	8.5	58MV(B,C)060–14
	CAP**4817A**	41,500	TDR&TXV	14.5			12.5	42,000	3.80	26,400	2.58	8.5	58CV(A,X)090–16
	CAP**4817A**	41,500	TDR&TXV	14.0			12.0	42,000	3.74	27,000	2.52	8.2	58PH*070–16
	CAP**4817A**	42,000	TDR&TXV	14.5			12.0	42,000	3.82	26,600	2.60	8.5	58MEB040–12
	CAP**4817A**	42,000	TDR&TXV	14.5			12.0	42,000	3.82	26,800	2.58	8.5	58MEC060–12
	CAP**4817A**	42,000	TDR&TXV	14.5			12.0	42,000	3.84	26,600	2.60	8.5	58MEC080–12
	CAP**4817A**	41,500	TDR&TXV	14.5			12.0	42,000	3.80	26,400	2.58	8.5	58MEC080–16
	CAP**4817A**	41,500	TDR&TXV	14.0			12.0	42,000	3.76	26,800	2.54	8.5	OVMAAB042112
	CAP**4821A**	41,500	TXV		13.5		11.5	42,000	3.72	27,400	2.52	8.2	
	CAP**4821A**	41,000	TDR&TXV	14.0			12.0	42,000	3.70	26,600	2.52	8.2	58MV(B,C)080–14
	CAP**4821A**	41,500	TDR&TXV	14.5			12.0	42,000	3.72	26,400	2.54	8.2	58MV(B,C)080–20
	CAP**4821A**	41,000	TDR&TXV	14.5			12.0	42,000	3.70	26,200	2.54	8.2	58MV(B,C)100–20
	CAP**4821A**	41,500	TDR&TXV	14.5			12.0	42,000	3.76	26,200	2.58	8.5	58CV(A,X)110–20
	CAP**4821A**	41,500	TDR&TXV	14.5			12.5	42,000	3.78	26,200	2.58	8.5	58PH*090–16
	CAP**4821A**	41,500	TDR&TXV	15.0			12.5	42,000	3.80	26,200	2.60	8.5	58PH*110–20
	CAP**4821A**	41,500	TDR&TXV	15.0			12.5	42,000	3.80	26,200	2.60	8.5	58MEC100–20
	CAP**4821A**	41,500	TDR&TXV	14.0			11.7	42,000	3.72	27,000	2.54	8.2	OVLAAB048112
	CAP**4823A**	41,500	TXV		13.5		11.5	42,000	3.72	27,400	2.52	8.2	
	CAP**4823A**	42,000	TDR&TXV	14.5			12.2	42,000	3.80	26,800	2.58	8.5	58HDV080––20
	CAP**4824A**	41,500	TXV		13.5		11.5	42,000	3.72	27,400	2.52	8.2	
	CAP**4824A**	41,000	TDR&TXV	14.5			12.0	42,000	3.70	26,400	2.54	8.2	58MVB040–14
	CAP**4824A**	41,500	TDR&TXV	14.5			12.0	42,000	3.76	26,200	2.58	8.5	58MV(B,C)120–20

See notes on page 26

COMBINATION RATINGS CONTINUED

Unit Size – Series	Indoor Model	Cooling Cap.	ARI Standard Ratings										Furnace Model
			Cooling					Heating					
			Factory Enhance	Std. Rating	SEER TDR	PU-RON TXV	EER	High Temp		Low Temp		HSP F	
								E Cap.	E COP	H Cap.	H COP		
	CAP**4824A**	41,500	TDR&TXV	15.0			12.5	42,000	3.80	26,000	2.60	8.5	58CV(A,X)135–22
	CAP**4824A**	41,500	TDR&TXV	15.0			12.5	42,000	3.80	26,000	2.60	8.5	58CV(A,X)155–22
	CAP**4824A**	41,500	TDR&TXV	15.0			12.5	42,000	3.82	26,400	2.60	8.5	58PH*135–20
	CAP**4824A**	42,000	TDR&TXV	15.0			12.5	42,000	3.86	26,200	2.62	8.5	58MEC120–20
	CNPF*4818A**	41,500	TXV		13.5		11.5	42,000	3.68	27,400	2.50	8.2	
	CNPH*4221A**	41,000	TXV		13.5		11.5	42,000	3.62	27,200	2.48	8.0	
	CNPH*4221A**	40,500	TDR&TXV	14.0			11.5	42,000	3.58	26,200	2.48	8.0	58MVB040–14
	CNPH*4221A**	41,000	TDR&TXV	14.0			12.0	42,000	3.66	26,400	2.52	8.2	58MV(B,C)060–14
	CNPH*4221A**	40,500	TDR&TXV	14.0			11.5	42,000	3.58	26,400	2.48	8.0	58MV(B,C)080–14
	CNPH*4221A**	40,500	TDR&TXV	14.0			12.0	42,000	3.62	26,400	2.50	8.0	58MV(B,C)080–20
	CNPH*4221A**	40,500	TDR&TXV	14.0			12.0	42,000	3.58	26,200	2.48	8.0	58MV(B,C)100–20
	CNPH*4221A**	40,500	TDR&TXV	14.5			12.0	42,000	3.64	26,000	2.52	8.2	58MV(B,C)120–20
	CNPH*4221A**	40,500	TDR&TXV	14.0			11.5	42,000	3.58	26,400	2.48	8.0	58CV(A,X)070–12
	CNPH*4221A**	40,500	TDR&TXV	14.5			12.0	42,000	3.64	26,000	2.52	8.2	58CV(A,X)090–16
	CNPH*4221A**	41,000	TDR&TXV	14.5			12.0	42,000	3.64	26,200	2.52	8.2	58CV(A,X)110–20
	CNPH*4221A**	41,000	TDR&TXV	14.5			12.0	42,000	3.68	26,000	2.54	8.2	58CV(A,X)135–22
	CNPH*4221A**	41,000	TDR&TXV	14.5			12.0	41,500	3.68	26,000	2.54	8.2	58CV(A,X)155–22
	CNPH*4221A**	40,500	TDR&TXV	13.5			11.5	42,000	3.58	26,800	2.46	8.0	58PH*070–16
	CNPH*4221A**	41,000	TDR&TXV	14.5			12.0	42,000	3.66	26,000	2.52	8.2	58PH*090–16
	CNPH*4221A**	41,000	TDR&TXV	14.5			12.0	42,000	3.68	26,000	2.54	8.2	58PH*110–20
	CNPH*4221A**	41,000	TDR&TXV	14.5			12.0	42,000	3.66	26,000	2.52	8.2	58PH*135–20
	CNPH*4221A**	41,000	TDR&TXV	14.0			12.0	42,000	3.66	26,400	2.52	8.2	58MEB040–12
	CNPH*4221A**	41,000	TDR&TXV	14.0			12.0	42,000	3.66	26,400	2.52	8.2	58MEC060–12
	CNPH*4221A**	41,000	TDR&TXV	14.5			12.0	42,000	3.66	26,400	2.52	8.2	58MEC080–12
	CNPH*4221A**	41,000	TDR&TXV	14.0			12.0	42,000	3.64	26,200	2.52	8.2	58MEC080–16
	CNPH*4221A**	41,000	TDR&TXV	14.5			12.0	42,000	3.68	26,000	2.54	8.2	58MEC100–20
	CNPH*4221A**	41,000	TDR&TXV	14.5			12.0	42,000	3.70	26,000	2.56	8.2	58MEC120–20
	CNPH*4221A**	41,000	TDR&TXV	14.0			12.0	42,000	3.66	26,600	2.52	8.2	58HDV080––20
	CNPH*4221A**	41,000	TDR&TXV	14.0			12.0	42,000	3.66	26,200	2.52	8.2	58HDV100––20
	CNPH*4221A**	40,500	TDR&TXV	13.7			11.7	42,000	3.60	26,400	2.48	8.2	OVMAAB042112
	CNPH*4221A**	41,000	TDR&TXV	13.7			11.5	42,000	3.62	26,800	2.48	8.2	OVLAAB048112
	CNPH*4221A**	41,500	TDR&TXV	14.0			12.0	42,000	3.74	27,000	2.56	8.5	OVLAAB060154
	CNPH*4321A**	42,000	TDR&TXV	15.0			12.5	42,000	3.90	27,000	2.62	8.5	58HDV080––20
	CNPH*4321A**	42,000	TDR&TXV	15.0			12.5	42,000	3.88	26,600	2.62	8.7	58HDV100––20
	CNPH*4321A**	42,000	TDR&TXV	14.5			12.2	42,000	3.82	26,600	2.58	8.5	OVMAAB042112
	CNPH*4321A**	42,000	TDR&TXV	14.5			12.0	42,000	3.82	27,000	2.58	8.5	OVLAAB048112
	CNPH*4321A**	42,000	TDR&TXV	15.0			12.5	42,000	3.98	27,200	2.66	8.7	OVLAAB060154
	CNPH*4821A**	42,000	TXV		13.5		11.5	42,000	3.72	27,400	2.52	8.2	
	CNPH*4821A**	41,000	TDR&TXV	14.5			12.0	42,000	3.70	26,400	2.54	8.2	58MVB040–14
	CNPH*4821A**	41,500	TDR&TXV	14.5			12.0	42,000	3.78	26,400	2.58	8.5	58MV(B,C)060–14
	CNPH*4821A**	41,500	TDR&TXV	14.5			12.0	42,000	3.72	26,400	2.54	8.2	58MV(B,C)080–14
	CNPH*4821A**	41,500	TDR&TXV	14.5			12.0	42,000	3.74	26,400	2.56	8.5	58MV(B,C)080–20
42–30	CNPH*4821A**	41,000	TDR&TXV	14.5			12.0	42,000	3.72	26,200	2.56	8.2	58MV(B,C)100–20
	CNPH*4821A**	41,500	TDR&TXV	14.5			12.5	42,000	3.76	26,200	2.58	8.5	58MV(B,C)120–20
	CNPH*4821A**	41,000	TDR&TXV	14.5			12.0	42,000	3.70	26,400	2.54	8.2	58CV(A,X)070–12
	CNPH*4821A**	41,500	TDR&TXV	14.5			12.0	42,000	3.76	26,200	2.58	8.5	58CV(A,X)090–16
	CNPH*4821A**	41,500	TDR&TXV	15.0			12.5	42,000	3.78	26,200	2.60	8.5	58CV(A,X)110–20
	CNPH*4821A**	41,500	TDR&TXV	15.0			12.5	42,000	3.80	26,000	2.60	8.5	58CV(A,X)135–22
	CNPH*4821A**	41,500	TDR&TXV	15.0			12.5	42,000	3.80	26,000	2.60	8.5	58CV(A,X)155–22
	CNPH*4821A**	41,500	TDR&TXV	14.0			12.0	42,000	3.70	27,000	2.52	8.2	58PH*070–16
	CNPH*4821A**	42,000	TDR&TXV	15.0			12.5	42,000	3.80	26,400	2.60	8.5	58PH*090–16
	CNPH*4821A**	42,000	TDR&TXV	15.0			12.5	42,000	3.84	26,200	2.62	8.5	58PH*110–20
	CNPH*4821A**	42,000	TDR&TXV	15.0			12.5	42,000	3.82	26,400	2.60	8.5	58PH*135–20
	CNPH*4821A**	42,000	TDR&TXV	14.5			12.0	42,000	3.80	26,600	2.60	8.5	58MEB040–12
	CNPH*4821A**	42,000	TDR&TXV	14.5			12.0	42,000	3.80	26,600	2.58	8.5	58MEC060–12
	CNPH*4821A**	42,000	TDR&TXV	14.5			12.0	42,000	3.80	26,600	2.60	8.5	58MEC080–12
	CNPH*4821A**	41,500	TDR&TXV	14.5			12.0	42,000	3.78	26,400	2.58	8.5	58MEC080–16
	CNPH*4821A**	42,000	TDR&TXV	15.0			12.5	42,000	3.84	26,400	2.62	8.5	58MEC100–20
	CNPH*4821A**	42,000	TDR&TXV	15.0			12.5	42,000	3.86	26,200	2.64	8.5	58MEC120–20
	CNPH*4821A**	42,000	TDR&TXV	14.5			12.2	42,000	3.82	26,800	2.60	8.5	58HDV080––20
	CNPH*4821A**	42,000	TDR&TXV	15.0			12.5	42,000	3.80	26,400	2.60	8.5	58HDV100––20
	CNPH*4821A**	41,500	TDR&TXV	14.5			12.0	42,000	3.72	26,600	2.56	8.2	OVMAAB042112
	CNPH*4821A**	41,500	TDR&TXV	14.0			12.0	42,000	3.74	26,800	2.54	8.2	OVLAAB048112
	CNPH*4821A**	42,000	TDR&TXV	14.5			12.2	42,000	3.88	27,000	2.62	8.5	OVLAAB060154
	CNPV*4217A**	41,500	TXV		13.5		11.5	42,000	3.68	27,400	2.50	8.2	
	CNPV*4217A**	41,500	TDR&TXV	14.5			12.0	42,000	3.70	26,600	2.54	8.2	58MV(B,C)060–14
	CNPV*4217A**	41,000	TDR&TXV	14.5			12.0	42,000	3.70	26,200	2.54	8.2	58CV(A,X)090–16
	CNPV*4217A**	41,000	TDR&TXV	13.5			11.5	42,000	3.62	26,800	2.48	8.2	58PH*070–16
	CNPV*4217A**	41,500	TDR&TXV	14.5			12.0	42,000	3.72	26,400	2.54	8.2	58MEB040–12
	CNPV*4217A**	41,500	TDR&TXV	14.5			12.0	42,000	3.70	26,600	2.54	8.2	58MEC060–12
	CNPV*4217A**	41,500	TDR&TXV	14.5			12.0	42,000	3.72	26,400	2.54	8.2	58MEC080–12
	CNPV*4217A**	41,000	TDR&TXV	14.5			12.0	42,000	3.70	26,400	2.54	8.2	58MEC080–16
	CNPV*4217A**	41,000	TDR&TXV	14.0			11.7	42,000	3.64	26,600	2.50	8.2	OVMAAB042112
	CNPV*4221A**	41,000	TXV		13.5		11.5	42,000	3.62	27,200	2.48	8.0	
	CNPV*4221A**	40,500	TDR&TXV	14.0			11.5	42,000	3.58	26,400	2.48	8.0	58MV(B,C)080–14
	CNPV*4221A**	40,500	TDR&TXV	14.0			11.5	42,000	3.62	26,400	2.50	8.0	58MV(B,C)080–20
	CNPV*4221A**	40,500	TDR&TXV	14.0			12.0	42,000	3.58	26,200	2.48	8.0	58MV(B,C)100–20
	CNPV*4221A**	41,000	TDR&TXV	14.5			12.0	42,000	3.64	26,200	2.52	8.2	58CV(A,X)110–20
	CNPV*4221A**	41,000	TDR&TXV	14.5			12.0	42,000	3.66	26,000	2.52	8.2	58PH*090–16
	CNPV*4221A**	41,000	TDR&TXV	14.5			12.0	42,000	3.68	26,000	2.54	8.2	58PH*110–20
	CNPV*4221A**	41,000	TDR&TXV	14.5			12.0	42,000	3.68	26,000	2.54	8.2	58MEC100–20
	CNPV*4221A**	41,000	TDR&TXV	13.7			11.5	42,000	3.62	26,800	2.48	8.2	OVLAAB048112
	CNPV*4324A**	42,000	TXV		14.0		12.0	42,000	3.80	27,600	2.56	8.5	
	CNPV*4324A**	42,000	TDR&TXV	15.0			12.5	42,000	3.80	26,400	2.58	8.5	58MVB040–14
	CNPV*4324A**	42,000	TDR&TXV	15.0			12.5	42,000	3.86	26,400	2.62	8.5	58MV(B,C)120–20

See notes on page 26

COMBINATION RATINGS CONTINUED

Unit Size – Series	Indoor Model	Clg. Cap.	ARI Standard Ratings										Furnace Model
			Cooling					Heating					
								High Temp		Low Temp			
			Factory Enhance	Std. Rating	SEER TDR	PU-RON TXV	EER	E Cap.	E COP	H Cap.	H COP	HSPF	
	CNPV*4324A**	42,000	TDR&TXV	15.5			13.0	42,000	3.92	26,200	2.66	8.7	58CV(A,X)135–22
	CNPV*4324A**	42,000	TDR&TXV	15.5			13.0	42,000	3.90	26,200	2.66	8.7	58CV(A,X)155–22
	CNPV*4324A**	42,000	TDR&TXV	15.5			12.5	42,000	3.94	26,600	2.66	8.7	58PH*135–20
	CNPV*4324A**	42,000	TDR&TXV	15.5			13.0	42,000	3.98	26,600	2.68	8.7	58MEC120–20
	CNPV*4324A**	42,000	TDR&TXV	15.0			12.5	42,000	3.84	26,600	2.60	8.5	58MV(B,C)080–20
	CNPV*4324A**	42,000	TDR&TXV	15.0			12.5	42,000	3.82	26,400	2.60	8.5	58MV(B,C)100–20
	CNPV*4324A**	42,000	TDR&TXV	15.0			12.5	42,000	3.94	26,400	2.66	8.7	58MEC100–20
	CNPV*4324A**	42,000	TDR&TXV	15.0			12.5	42,000	3.88	26,200	2.64	8.7	58CV(A,X)110–20
	CNPV*4324A**	42,000	TDR&TXV	15.5			13.0	42,000	3.94	26,400	2.66	8.7	58PH*110–20
	CNPV*4324A**	42,000	TDR&TXV	15.0			12.5	42,000	3.90	26,600	2.64	8.7	58HDV100––20
	CNPV*4821A**	42,000	TXV		13.5		11.5	42,000	3.72	27,400	2.52	8.2	
	CNPV*4821A**	41,500	TDR&TXV	14.5			12.0	42,000	3.72	26,400	2.54	8.2	58MV(B,C)080–14
	CNPV*4821A**	41,500	TDR&TXV	14.5			12.0	42,000	3.74	26,400	2.56	8.5	58MV(B,C)080–20
	CNPV*4821A**	41,000	TDR&TXV	14.5			12.0	42,000	3.72	26,200	2.56	8.2	58MV(B,C)100–20
	CNPV*4821A**	41,500	TDR&TXV	15.0			12.5	42,000	3.78	26,200	2.60	8.5	58CV(A,X)110–20
	CNPV*4821A**	42,000	TDR&TXV	15.0			12.5	42,000	3.80	26,400	2.60	8.5	58PH*090–16
	CNPV*4821A**	42,000	TDR&TXV	15.0			12.5	42,000	3.84	26,200	2.62	8.5	58PH*110–20
	CNPV*4821A**	42,000	TDR&TXV	15.0			12.5	42,000	3.84	26,400	2.62	8.5	58MEC100–20
	CNPV*4821A**	41,500	TDR&TXV	14.0			12.0	42,000	3.74	26,800	2.54	8.2	OVLAAB048112
	CNPV*4824A**	42,000	TXV		13.5		11.5	42,000	3.72	27,400	2.52	8.2	
	CNPV*4824A**	41,000	TDR&TXV	14.5			12.0	42,000	3.70	26,400	2.54	8.2	58MVB040–14
	CNPV*4824A**	41,500	TDR&TXV	14.5			12.5	42,000	3.76	26,200	2.58	8.5	58MV(B,C)120–20
	CNPV*4824A**	41,500	TDR&TXV	15.0			12.5	42,000	3.80	26,000	2.60	8.5	58CV(A,X)135–22
	CNPV*4824A**	41,500	TDR&TXV	15.0			12.5	42,000	3.80	26,000	2.60	8.5	58CV(A,X)155–22
	CNPV*4824A**	42,000	TDR&TXV	15.0			12.5	42,000	3.82	26,400	2.60	8.5	58PH*135–20
	CNPV*4824A**	42,000	TDR&TXV	15.0			12.5	42,000	3.86	26,200	2.64	8.5	58MEC120–20
	CNPV*4824A**	42,000	TDR&TXV	15.0			12.5	42,000	3.80	26,400	2.60	8.5	58HDV100––20
	CSPH*4212A**	42,000	TXV		13.5		11.5	42,000	3.74	27,400	2.52	8.2	
	CSPH*4212A**	41,500	TDR&TXV	14.5			12.0	42,000	3.70	26,400	2.54	8.2	58MVB040–14
	CSPH*4212A**	42,000	TDR&TXV	14.5			12.0	42,000	3.78	26,600	2.58	8.5	58MV(B,C)060–14
	CSPH*4212A**	41,500	TDR&TXV	14.0			12.0	42,000	3.72	26,600	2.54	8.2	58MV(B,C)080–14
	CSPH*4212A**	41,500	TDR&TXV	14.5			12.0	42,000	3.74	26,600	2.56	8.2	58MV(B,C)080–20
	CSPH*4212A**	41,500	TDR&TXV	14.5			12.0	42,000	3.70	26,200	2.54	8.2	58MV(B,C)100–20
	CSPH*4212A**	41,500	TDR&TXV	14.5			12.0	42,000	3.76	26,200	2.58	8.5	58MV(B,C)120–20
	CSPH*4212A**	41,500	TDR&TXV	14.0			12.0	42,000	3.70	26,600	2.54	8.2	58CV(A,X)070–12
	CSPH*4212A**	41,500	TDR&TXV	14.5			12.0	42,000	3.76	26,200	2.58	8.5	58CV(A,X)090–16
	CSPH*4212A**	41,500	TDR&TXV	14.5			12.0	42,000	3.78	26,400	2.58	8.5	58CV(A,X)110–20
	CSPH*4212A**	42,000	TDR&TXV	15.0			12.5	42,000	3.80	26,200	2.60	8.5	58CV(A,X)135–22
	CSPH*4212A**	41,500	TDR&TXV	15.0			12.5	42,000	3.80	26,200	2.60	8.5	58CV(A,X)155–22
	CSPH*4212A**	41,500	TDR&TXV	13.5			11.5	42,000	3.70	27,000	2.52	8.2	58PH*070–16
42–30	CSPH*4212A**	42,000	TDR&TXV	14.5			12.5	42,000	3.80	26,400	2.60	8.5	58PH*090–16
	CSPH*4212A**	42,000	TDR&TXV	15.0			12.5	42,000	3.82	26,200	2.60	8.5	58PH*110–20
	CSPH*4212A**	42,000	TDR&TXV	15.0			12.5	42,000	3.80	26,400	2.60	8.5	58PH*135–20
	CSPH*4212A**	42,000	TDR&TXV	14.5			12.0	42,000	3.80	26,600	2.58	8.5	58MEB040–12
	CSPH*4212A**	42,000	TDR&TXV	14.5			12.0	42,000	3.78	26,600	2.58	8.5	58MEC060–12
	CSPH*4212A**	42,000	TDR&TXV	14.5			12.0	42,000	3.80	26,600	2.58	8.5	58MEC080–12
	CSPH*4212A**	41,500	TDR&TXV	14.5			12.0	42,000	3.78	26,400	2.58	8.5	58MEC080–16
	CSPH*4212A**	42,000	TDR&TXV	15.0			12.5	42,000	3.82	26,400	2.60	8.5	58MEC100–20
	CSPH*4212A**	42,000	TDR&TXV	15.0			12.5	42,000	3.84	26,200	2.62	8.5	58MEC120–20
	CSPH*4212A**	42,000	TDR&TXV	14.5			12.0	42,000	3.80	26,800	2.58	8.5	58HDV080––20
	CSPH*4212A**	42,000	TDR&TXV	14.5			12.2	42,000	3.78	26,400	2.58	8.5	58HDV100––20
	CSPH*4212A**	41,500	TDR&TXV	14.5			12.0	42,000	3.72	26,600	2.54	8.2	OVMAAB042112
	CSPH*4212A**	42,000	TDR&TXV	14.0			11.7	42,000	3.74	27,000	2.54	8.2	OVLAAB048112
	CSPH*4212A**	42,000	TDR&TXV	14.5			12.2	42,000	3.88	27,200	2.62	8.5	OVLAAB060154
	CSPH*4812A**	42,000	TXV		14.0		11.5	42,000	3.76	27,600	2.54	8.2	
	CSPH*4812A**	41,500	TDR&TXV	14.5			12.0	42,000	3.72	26,400	2.54	8.2	58MVB040–14
	CSPH*4812A**	42,000	TDR&TXV	14.5			12.5	42,000	3.80	26,600	2.58	8.5	58MV(B,C)060–14
	CSPH*4812A**	41,500	TDR&TXV	14.5			12.0	42,000	3.74	26,600	2.54	8.2	58MV(B,C)080–14
	CSPH*4812A**	41,500	TDR&TXV	14.5			12.0	42,000	3.76	26,600	2.56	8.5	58MV(B,C)080–20
	CSPH*4812A**	41,500	TDR&TXV	14.5			12.0	42,000	3.74	26,400	2.56	8.2	58MV(B,C)100–20
	CSPH*4812A**	42,000	TDR&TXV	15.0			12.5	42,000	3.78	26,400	2.58	8.5	58MV(B,C)120–20
	CSPH*4812A**	41,500	TDR&TXV	14.5			12.0	42,000	3.72	26,600	2.54	8.2	58CV(A,X)070–12
	CSPH*4812A**	42,000	TDR&TXV	15.0			12.5	42,000	3.78	26,400	2.58	8.5	58CV(A,X)090–16
	CSPH*4812A**	42,000	TDR&TXV	15.0			12.5	42,000	3.80	26,400	2.60	8.5	58CV(A,X)110–20
	CSPH*4812A**	42,000	TDR&TXV	15.0			12.5	42,000	3.84	26,200	2.62	8.5	58CV(A,X)135–22
	CSPH*4812A**	42,000	TDR&TXV	15.0			12.5	42,000	3.82	26,200	2.62	8.5	58CV(A,X)155–22
	CSPH*4812A**	42,000	TDR&TXV	14.0			12.0	42,000	3.72	27,000	2.54	8.2	58PH*070–16
	CSPH*4812A**	42,000	TDR&TXV	15.0			12.5	42,000	3.82	26,400	2.60	8.5	58PH*090–16
	CSPH*4812A**	42,000	TDR&TXV	15.0			12.5	42,000	3.84	26,200	2.62	8.5	58PH*110–20
	CSPH*4812A**	42,000	TDR&TXV	15.0			12.5	42,000	3.82	26,400	2.60	8.5	58PH*135–20
	CSPH*4812A**	42,000	TDR&TXV	14.5			12.5	42,000	3.82	26,600	2.60	8.5	58MEB040–12
	CSPH*4812A**	42,000	TDR&TXV	14.5			12.0	42,000	3.82	26,600	2.60	8.5	58MEC060–12
	CSPH*4812A**	42,000	TDR&TXV	15.0			12.5	42,000	3.82	26,600	2.60	8.5	58MEC080–12
	CSPH*4812A**	42,000	TDR&TXV	14.5			12.5	42,000	3.80	26,400	2.58	8.5	58MEC080–16
	CSPH*4812A**	42,000	TDR&TXV	15.0			12.5	42,000	3.84	26,400	2.62	8.5	58MEC100–20
	CSPH*4812A**	42,000	TDR&TXV	15.0			12.5	42,000	3.88	26,400	2.64	8.5	58MEC120–20
	CSPH*4812A**	42,000	TDR&TXV	14.5			12.2	42,000	3.84	26,800	2.60	8.5	58HDV080––20
	CSPH*4812A**	42,000	TDR&TXV	15.0			12.5	42,000	3.82	26,600	2.60	8.5	58HDV100––20
	CSPH*4812A**	41,500	TDR&TXV	14.5			12.0	42,000	3.74	26,600	2.56	8.5	OVMAAB042112
	CSPH*4812A**	42,000	TDR&TXV	14.0			12.0	42,000	3.76	27,000	2.54	8.2	OVLAAB048112
	CSPH*4812A**	42,000	TDR&TXV	14.5			12.2	42,000	3.90	27,200	2.64	8.5	OVLAAB060154
48–30	*FX4DN(B,F)049	47,500	TDR&TXV	15.0			12.5	47,000	3.84	28,000	2.66	8.7	
	FB4CNF048	46,500	TDR			14.0	11.5	46,500	3.68	28,000	2.56	8.2	

See notes on page 26

COMBINATION RATINGS CONTINUED

25HNB5

Unit Size – Series	Indoor Model	Clg. Cap.	ARI Standard Ratings										
			Cooling					Heating					Furnace Model
								High Temp		Low Temp		HSPF	
			Factory Enhance	Std. Rating	SEER TDR	PU-RON TXV	EER	E Cap.	E COP	H Cap.	H COP		
	FB4CNF060	47,500	TDR&TXV	14.0			12.0	47,000	3.78	28,200	2.62	8.5	
	FE4AN(B,F)005	47,000	TDR&TXV	15.0			12.5	46,000	3.76	27,400	2.64	8.5	
	FV4CN(B,F)005	47,000	TDR&TXV	15.0			12.5	46,000	3.76	27,400	2.64	8.5	
	FX4DN(B,F)061	48,000	TDR&TXV	15.0			12.5	47,000	3.94	28,000	2.70	9.0	
	FY5BNB060	47,500	TDR&TXV	13.5			11.5	48,000	3.72	29,000	2.54	8.4	
	FY5BNF048	47,500	TDR			14.0	12.0	47,000	3.76	28,400	2.60	8.5	
	CAP**4817A**	46,000	TXV		13.5		11.5	47,000	3.64	28,200	2.54	8.2	
	CAP**4817A**	46,000	TDR&TXV	14.0			11.5	46,500	3.68	27,800	2.56	8.2	58CV(A,X)090–16
	CAP**4817A**	46,000	TDR&TXV	14.0			11.5	47,000	3.70	28,000	2.56	8.2	58MEC080–16
	CAP**4821A**	46,500	TXV		13.5		11.2	47,500	3.66	28,600	2.54	8.2	
	CAP**4821A**	45,500	TDR&TXV	13.5			11.5	46,000	3.60	27,600	2.52	8.2	58MV(B,C)080–20
	CAP**4821A**	45,500	TDR&TXV	13.5			11.5	46,500	3.62	27,800	2.54	8.2	58MV(B,C)100–20
	CAP**4821A**	45,500	TDR&TXV	14.0			11.5	46,000	3.66	27,600	2.56	8.2	58CV(A,X)110–20
	CAP**4821A**	46,000	TDR&TXV	14.0			11.5	46,500	3.68	27,600	2.56	8.2	58PH*090–16
	CAP**4821A**	46,000	TDR&TXV	14.5			12.0	46,000	3.70	27,400	2.58	8.2	58PH*110–20
	CAP**4821A**	46,000	TDR&TXV	14.0			12.0	46,000	3.70	27,600	2.58	8.2	58MEC100–20
	CAP**4821A**	45,500	TDR&TXV	13.2			11.2	47,000	3.58	28,400	2.50	8.2	OVLAAB048112
	CAP**4823A**	46,500	TXV		13.5		11.2	47,500	3.66	28,600	2.54	8.2	
	CAP**4823A**	46,000	TDR&TXV	13.5			11.5	47,000	3.66	28,200	2.54	8.2	58HDV080––20
	CAP**4824A**	46,500	TXV		13.5		11.2	47,500	3.66	28,600	2.54	8.2	
	CAP**4824A**	45,500	TDR&TXV	14.0			11.5	46,000	3.66	27,600	2.56	8.2	58MV(B,C)120–20
	CAP**4824A**	46,000	TDR&TXV	14.5			12.0	46,000	3.70	27,400	2.58	8.2	58CV(A,X)135–22
	CAP**4824A**	46,000	TDR&TXV	14.5			12.0	46,000	3.72	27,200	2.60	8.2	58CV(A,X)155–22
	CAP**4824A**	46,000	TDR&TXV	14.0			12.0	46,000	3.70	27,600	2.58	8.2	58PH*135–20
	CAP**4824A**	46,000	TDR&TXV	14.5			12.0	46,000	3.74	27,600	2.60	8.5	58MEC120–20
	CAP**6021A**	47,000	TXV		13.5		11.5	47,500	3.72	28,800	2.56	8.5	
	CAP**6021A**	46,500	TDR&TXV	14.0			12.0	46,000	3.66	27,600	2.56	8.2	58MV(B,C)080–20
	CAP**6021A**	46,500	TDR&TXV	14.0			12.0	46,500	3.68	28,000	2.58	8.2	58MV(B,C)100–20
	CAP**6021A**	46,500	TDR&TXV	14.5			12.0	46,500	3.72	27,600	2.60	8.5	58CV(A,X)110–20
	CAP**6021A**	47,000	TDR&TXV	14.5			12.0	46,500	3.74	27,800	2.60	8.5	58PH*090–16
	CAP**6021A**	47,000	TDR&TXV	14.5			12.0	46,000	3.76	27,600	2.64	8.5	58PH*110–20
	CAP**6021A**	47,000	TDR&TXV	14.5			12.0	46,500	3.76	27,600	2.62	8.5	58MEC100–20
	CAP**6021A**	46,500	TDR&TXV	13.5			11.5	47,000	3.64	28,400	2.54	8.2	OVLAAB048112
	CAP**6024A**	47,000	TXV		13.5		11.5	47,500	3.72	28,800	2.56	8.5	
	CAP**6024A**	46,500	TDR&TXV	14.5			12.0	46,500	3.72	27,800	2.60	8.5	58MV(B,C)120–20
	CAP**6024A**	47,000	TDR&TXV	14.5			12.0	46,000	3.76	27,600	2.62	8.5	58CV(A,X)135–22
	CAP**6024A**	47,000	TDR&TXV	15.0			12.5	46,000	3.78	27,400	2.64	8.5	58CV(A,X)155–22
	CAP**6024A**	47,000	TDR&TXV	14.5			12.0	46,500	3.76	27,800	2.62	8.5	58PH*135–20
	CAP**6024A**	47,000	TDR&TXV	14.5			12.0	46,500	3.80	27,600	2.64	8.5	58MEC120–20
	CAP**6025A**	47,000	TXV		13.5		11.5	47,500	3.72	28,800	2.56	8.5	
	CAP**6025A**	47,000	TDR&TXV	14.0			12.0	46,500	3.72	28,000	2.60	8.5	58HDV100––20
	CNPF*4818A**	45,500	TXV		13.5		11.2	46,500	3.56	28,000	2.50	8.2	
48–30	CNPH*4821A**	46,500	TXV		13.5		11.5	47,500	3.66	28,600	2.54	8.2	
	CNPH*4821A**	45,500	TDR&TXV	14.0			11.5	46,000	3.62	27,600	2.54	8.2	58MV(B,C)080–20
	CNPH*4821A**	46,000	TDR&TXV	13.5			11.5	46,500	3.64	27,800	2.54	8.2	58MV(B,C)100–20
	CNPH*4821A**	46,000	TDR&TXV	14.0			12.0	46,000	3.66	27,600	2.56	8.2	58MV(B,C)120–20
	CNPH*4821A**	46,000	TDR&TXV	14.0			12.0	46,000	3.66	27,600	2.56	8.2	58CV(A,X)090–16
	CNPH*4821A**	46,000	TDR&TXV	14.0			12.0	46,000	3.68	27,400	2.58	8.2	58CV(A,X)110–20
	CNPH*4821A**	46,000	TDR&TXV	14.5			12.0	46,000	3.70	27,400	2.60	8.2	58CV(A,X)135–22
	CNPH*4821A**	46,000	TDR&TXV	14.5			12.0	46,000	3.74	27,200	2.60	8.5	58CV(A,X)155–22
	CNPH*4821A**	46,000	TDR&TXV	14.0			12.0	46,500	3.70	27,800	2.58	8.2	58PH*090–16
	CNPH*4821A**	46,000	TDR&TXV	14.5			12.0	46,000	3.72	27,400	2.60	8.5	58PH*110–20
	CNPH*4821A**	46,000	TDR&TXV	14.0			12.0	46,000	3.72	27,600	2.58	8.2	58PH*135–20
	CNPH*4821A**	46,000	TDR&TXV	14.0			11.5	46,500	3.68	28,000	2.56	8.2	58MEC080–16
	CNPH*4821A**	46,000	TDR&TXV	14.5			12.0	46,000	3.72	27,600	2.60	8.5	58MEC100–20
	CNPH*4821A**	46,500	TDR&TXV	14.5			12.0	46,000	3.74	27,600	2.62	8.5	58MEC120–20
	CNPH*4821A**	46,000	TDR&TXV	13.5			11.5	47,000	3.68	28,200	2.56	8.3	58HDV080––20
	CNPH*4821A**	46,000	TDR&TXV	14.0			11.5	46,500	3.68	27,800	2.56	8.3	58HDV100––20
	CNPH*4821A**	46,000	TDR&TXV	13.2			11.2	47,000	3.60	28,200	2.52	8.2	OVLAAB048112
	CNPH*4821A**	47,000	TDR&TXV	13.7			11.5	47,500	3.74	28,400	2.58	8.5	OVLAAB060154
	CNPH*6024A**	47,000	TXV		13.5		11.5	47,500	3.70	28,600	2.56	8.2	
	CNPH*6024A**	46,500	TDR&TXV	14.0			12.0	46,000	3.66	27,600	2.58	8.2	58MV(B,C)080–20
	CNPH*6024A**	46,500	TDR&TXV	14.0			12.0	46,500	3.70	28,000	2.58	8.2	58MV(B,C)100–20
	CNPH*6024A**	46,500	TDR&TXV	14.5			12.0	46,000	3.72	27,600	2.60	8.5	58MV(B,C)120–20
	CNPH*6024A**	46,500	TDR&TXV	14.5			12.0	46,000	3.70	27,600	2.60	8.5	58CV(A,X)090–16
	CNPH*6024A**	46,500	TDR&TXV	14.5			12.0	46,000	3.72	27,600	2.60	8.5	58CV(A,X)110–20
	CNPH*6024A**	47,000	TDR&TXV	14.5			12.0	46,000	3.76	27,400	2.62	8.5	58CV(A,X)135–22
	CNPH*6024A**	47,000	TDR&TXV	15.0			12.5	46,000	3.78	27,400	2.64	8.5	58CV(A,X)155–22
	CNPH*6024A**	47,000	TDR&TXV	14.5			12.0	46,500	3.74	27,800	2.62	8.5	58PH*090–16
	CNPH*6024A**	47,000	TDR&TXV	14.5			12.5	46,000	3.78	27,600	2.64	8.5	58PH*110–20
	CNPH*6024A**	47,000	TDR&TXV	14.5			12.0	46,500	3.76	27,800	2.62	8.5	58PH*135–20
	CNPH*6024A**	47,000	TDR&TXV	14.0			12.0	46,500	3.72	28,000	2.58	8.5	58MEC080–16
	CNPH*6024A**	47,000	TDR&TXV	14.5			12.0	46,500	3.78	27,600	2.64	8.5	58MEC100–20
	CNPH*6024A**	47,000	TDR&TXV	14.5			12.0	46,500	3.80	27,600	2.64	8.5	58MEC120–20
	CNPH*6024A**	47,000	TDR&TXV	14.0			11.5	47,000	3.72	28,200	2.58	8.4	58HDV080––20
	CNPH*6024A**	47,000	TDR&TXV	14.0			12.0	46,500	3.72	28,000	2.60	8.4	58HDV100––20
	CNPH*6024A**	46,500	TDR&TXV	13.7			11.5	47,000	3.66	28,400	2.54	8.2	OVLAAB048112
	CNPH*6024A**	47,500	TDR&TXV	14.0			11.7	47,500	3.80	28,600	2.62	8.5	OVLAAB060154
	CNPH*6124A**	47,500	TXV		13.5		11.5	47,500	3.76	28,800	2.58	8.5	
	CNPH*6124A**	46,500	TDR&TXV	14.0			12.0	46,500	3.68	27,800	2.58	8.2	58MV(B,C)080–20
	CNPH*6124A**	47,000	TDR&TXV	14.0			12.0	47,000	3.72	28,000	2.58	8.5	58MV(B,C)100–20
	CNPH*6124A**	47,000	TDR&TXV	14.5			12.0	46,500	3.74	27,800	2.60	8.5	58MV(B,C)120–20
	CNPH*6124A**	47,000	TDR&TXV	14.5			12.0	46,500	3.74	27,800	2.60	8.5	58CV(A,X)090–16
	CNPH*6124A**	47,000	TDR&TXV	14.5			12.0	46,500	3.76	27,800	2.62	8.5	58CV(A,X)110–20
	CNPH*6124A**	47,000	TDR&TXV	14.5			12.0	46,500	3.78	27,600	2.64	8.5	58CV(A,X)135–22

See notes on page 26

COMBINATION RATINGS CONTINUED

Unit Size – Series	Indoor Model	Clg. Cap.	ARI Standard Ratings										Furnace Model
			Cooling					Heating					
								High Temp		Low Temp			
			Factory Enhance	Std. Rating	SEER TDR	PU-RON TXV	EER	E Cap.	E COP	H Cap.	H COP	HSPF	
	CNPH*6124A**	47,000	TDR&TXV	15.0			12.5	46,000	3.82	27,600	2.66	8.5	58CV(A,X)155–22
	CNPH*6124A**	47,000	TDR&TXV	14.5			12.0	46,500	3.78	27,800	2.62	8.5	58PH*090–16
	CNPH*6124A**	47,000	TDR&TXV	14.5			12.5	46,500	3.80	27,600	2.64	8.5	58PH*110–20
	CNPH*6124A**	47,000	TDR&TXV	14.5			12.0	46,500	3.78	27,800	2.62	8.5	58PH*135–20
	CNPH*6124A**	47,000	TDR&TXV	14.0			12.0	47,000	3.76	28,200	2.60	8.5	58MEC080–16
	CNPH*6124A**	47,000	TDR&TXV	14.5			12.0	46,500	3.80	27,800	2.64	8.5	58MEC100–20
	CNPH*6124A**	47,500	TDR&TXV	15.0			12.5	46,500	3.84	27,800	2.66	8.5	58MEC120–20
	CNPH*6124A**	47,000	TDR&TXV	14.0			12.0	47,000	3.76	28,400	2.60	8.5	58HDV080––20
	CNPH*6124A**	47,000	TDR&TXV	14.0			12.0	47,000	3.76	28,000	2.60	8.5	58HDV100––20
	CNPH*6124A**	47,000	TDR&TXV	13.5			11.5	47,500	3.68	28,400	2.54	8.2	OVLAAB048112
	CNPH*6124A**	48,000	TDR&TXV	14.0			11.7	47,500	3.84	28,800	2.62	8.5	OVLAAB060154
	CNPV*4821A**	46,500	TXV		13.5		11.5	47,500	3.66	28,600	2.54	8.2	
	CNPV*4821A**	45,500	TDR&TXV	14.0			11.5	46,000	3.62	27,600	2.54	8.2	58MV(B,C)080–20
	CNPV*4821A**	46,000	TDR&TXV	13.5			11.5	46,500	3.64	27,800	2.54	8.2	58MV(B,C)100–20
	CNPV*4821A**	46,000	TDR&TXV	14.0			12.0	46,000	3.68	27,400	2.58	8.2	58CV(A,X)110–20
	CNPV*4821A**	46,000	TDR&TXV	14.0			12.0	46,500	3.70	27,800	2.58	8.2	58PH*090–16
	CNPV*4821A**	46,000	TDR&TXV	14.5			12.0	46,000	3.72	27,400	2.60	8.5	58PH*110–20
	CNPV*4821A**	46,000	TDR&TXV	14.5			12.0	46,000	3.72	27,600	2.60	8.5	58MEC100–20
	CNPV*4821A**	46,000	TDR&TXV	13.2			11.2	47,000	3.60	28,200	2.52	8.2	OVLAAB048112
	CNPV*4824A**	46,500	TXV		13.5		11.5	47,500	3.66	28,600	2.54	8.2	
	CNPV*4824A**	46,000	TDR&TXV	14.0			12.0	46,000	3.66	27,600	2.56	8.2	58MV(B,C)120–20
	CNPV*4824A**	46,000	TDR&TXV	14.5			12.0	46,000	3.70	27,400	2.60	8.2	58CV(A,X)135–22
	CNPV*4824A**	46,000	TDR&TXV	14.5			12.0	46,000	3.74	27,200	2.60	8.5	58CV(A,X)155–22
	CNPV*4824A**	46,000	TDR&TXV	14.0			12.0	46,000	3.72	27,600	2.58	8.5	58PH*135–20
	CNPV*4824A**	46,500	TDR&TXV	14.5			12.0	46,000	3.74	27,600	2.62	8.5	58MEC120–20
	CNPV*4824A**	46,000	TDR&TXV	14.0			11.5	46,500	3.68	27,800	2.56	8.3	58HDV100––20
	CNPV*6024A**	47,000	TXV		13.5		11.5	47,500	3.70	28,600	2.56	8.5	
	CNPV*6024A**	46,500	TDR&TXV	14.5			12.0	46,000	3.72	27,600	2.60	8.5	58MV(B,C)120–20
	CNPV*6024A**	47,000	TDR&TXV	14.5			12.0	46,000	3.76	27,400	2.62	8.5	58CV(A,X)135–22
	CNPV*6024A**	47,000	TDR&TXV	15.0			12.5	46,000	3.78	27,400	2.64	8.5	58CV(A,X)155–22
	CNPV*6024A**	47,000	TDR&TXV	14.5			12.0	46,500	3.76	27,800	2.62	8.5	58PH*135–20
	CNPV*6024A**	47,000	TDR&TXV	14.5			12.0	46,500	3.80	27,600	2.64	8.5	58MEC120–20
	CNPV*6024A**	47,000	TDR&TXV	14.0			12.0	46,500	3.72	28,000	2.60	8.4	58HDV100––20
	CNPV*6124A**	48,000	TXV		14.0		11.5	48,000	3.78	28,800	2.58	8.5	
	CNPV*6124A**	47,000	TDR&TXV	14.5			12.0	46,500	3.80	27,800	2.64	8.5	58MV(B,C)120–20
	CNPV*6124A**	47,500	TDR&TXV	15.0			12.5	46,500	3.84	27,600	2.66	8.5	58CV(A,X)135–22
	CNPV*6124A**	47,500	TDR&TXV	15.0			12.5	46,000	3.88	27,600	2.68	8.5	58CV(A,X)155–22
	CNPV*6124A**	47,500	TDR&TXV	15.0			12.5	46,500	3.86	27,800	2.66	8.7	58PH*135–20
	CNPV*6124A**	48,000	TDR&TXV	15.0			12.5	46,500	3.90	27,800	2.68	8.7	58MEC120–20
	CNPV*6124A**	47,500	TDR&TXV	14.5			12.0	47,000	3.78	28,000	2.62	8.5	58MV(B,C)100–20
48–30	CNPV*6124A**	47,500	TDR&TXV	14.5			12.0	47,000	3.78	28,000	2.60	8.5	58MV(B,C)100–20
	CNPV*6124A**	47,000	TDR&TXV	14.5			12.0	46,500	3.80	27,800	2.64	8.5	58MV(B,C)120–20
	CNPV*6124A**	48,000	TDR&TXV	15.0			12.5	46,500	3.90	27,800	2.68	8.5	58MEC120–20
	CNPV*6124A**	47,500	TDR&TXV	14.5			12.5	46,500	3.82	27,600	2.64	8.6	58CV(A,X)110–20
	CNPV*6124A**	47,500	TDR&TXV	14.5			12.0	47,000	3.82	28,000	2.62	8.5	58HDV100––20
	CSPH*4812A**	47,000	TXV		13.5		11.5	47,500	3.70	28,600	2.56	8.5	
	CSPH*4812A**	46,000	TDR&TXV	14.0			11.5	46,000	3.64	27,800	2.54	8.2	58MV(B,C)080–20
	CSPH*4812A**	46,000	TDR&TXV	13.5			11.5	46,500	3.66	28,000	2.56	8.2	58MV(B,C)100–20
	CSPH*4812A**	46,000	TDR&TXV	14.0			12.0	46,500	3.70	27,800	2.58	8.2	58MV(B,C)120–20
	CSPH*4812A**	46,000	TDR&TXV	14.0			12.0	46,500	3.68	27,600	2.56	8.2	58CV(A,X)090–16
	CSPH*4812A**	46,000	TDR&TXV	14.0			12.0	46,500	3.70	27,600	2.58	8.2	58CV(A,X)110–20
	CSPH*4812A**	46,500	TDR&TXV	14.5			12.0	46,000	3.72	27,600	2.60	8.5	58CV(A,X)135–22
	CSPH*4812A**	46,500	TDR&TXV	14.5			12.0	46,000	3.76	27,400	2.62	8.5	58CV(A,X)155–22
	CSPH*4812A**	46,500	TDR&TXV	14.0			12.0	46,500	3.72	27,800	2.58	8.5	58PH*090–16
	CSPH*4812A**	46,500	TDR&TXV	14.5			12.0	46,000	3.74	27,400	2.60	8.5	58PH*110–20
	CSPH*4812A**	46,500	TDR&TXV	14.0			12.0	46,000	3.72	27,600	2.58	8.5	58PH*135–20
	CSPH*4812A**	46,500	TDR&TXV	14.0			11.5	46,500	3.70	28,000	2.56	8.2	58MEC080–16
	CSPH*4812A**	46,500	TDR&TXV	14.5			12.0	46,000	3.74	27,600	2.60	8.5	58MEC100–20
	CSPH*4812A**	46,500	TDR&TXV	14.5			12.0	46,000	3.76	27,600	2.62	8.5	58MEC120–20
	CSPH*4812A**	46,500	TDR&TXV	13.5			11.5	47,000	3.70	28,200	2.56	8.3	58HDV080––20
	CSPH*4812A**	46,500	TDR&TXV	14.0			11.5	46,500	3.70	28,000	2.56	8.3	58HDV100––20
	CSPH*4812A**	46,000	TDR&TXV	13.2			11.3	47,000	3.62	28,400	2.52	8.2	OVLAAB048112
	CSPH*4812A**	47,000	TDR&TXV	13.7			11.5	47,500	3.76	28,600	2.58	8.5	OVLAAB060154
	CSPH*6012A**	47,500	TXV		13.5		11.5	47,500	3.76	28,800	2.58	8.5	
	CSPH*6012A**	46,500	TDR&TXV	14.5			12.0	46,000	3.70	27,600	2.58	8.2	58MV(B,C)080–20
	CSPH*6012A**	47,000	TDR&TXV	14.0			12.0	46,500	3.72	28,000	2.60	8.5	58MV(B,C)100–20
	CSPH*6012A**	47,000	TDR&TXV	14.5			12.0	46,500	3.74	27,800	2.62	8.5	58MV(B,C)120–20
	CSPH*6012A**	47,000	TDR&TXV	14.5			12.0	46,500	3.74	27,600	2.60	8.5	58CV(A,X)090–16
	CSPH*6012A**	47,000	TDR&TXV	14.5			12.0	46,500	3.76	27,600	2.62	8.5	58CV(A,X)110–20
	CSPH*6012A**	47,000	TDR&TXV	14.5			12.5	46,000	3.78	27,600	2.64	8.5	58CV(A,X)135–22
	CSPH*6012A**	47,000	TDR&TXV	15.0			12.5	46,000	3.82	27,400	2.66	8.5	58CV(A,X)155–22
	CSPH*6012A**	47,500	TDR&TXV	14.5			12.0	46,500	3.78	27,800	2.62	8.5	58PH*090–16
	CSPH*6012A**	47,500	TDR&TXV	15.0			12.5	46,500	3.82	27,600	2.66	8.5	58PH*110–20
	CSPH*6012A**	47,500	TDR&TXV	14.5			12.0	46,500	3.80	27,800	2.64	8.5	58PH*135–20
	CSPH*6012A**	47,000	TDR&TXV	14.0			12.0	47,000	3.76	28,200	2.60	8.5	58MEC080–16
	CSPH*6012A**	47,500	TDR&TXV	14.5			12.0	46,500	3.82	27,800	2.64	8.5	58MEC100–20
	CSPH*6012A**	47,500	TDR&TXV	15.0			12.5	46,500	3.84	27,800	2.66	8.5	58MEC120–20
	CSPH*6012A**	47,500	TDR&TXV	14.0			12.0	47,000	3.78	28,400	2.60	8.5	58HDV080––20
	CSPH*6012A**	47,000	TDR&TXV	14.5			12.0	47,000	3.76	28,000	2.60	8.5	58HDV100––20
	CSPH*6012A**	47,000	TDR&TXV	13.7			11.5	47,000	3.70	28,400	2.56	8.2	OVLAAB048112
	CSPH*6012A**	48,000	TDR&TXV	14.0			11.7	47,500	3.86	28,600	2.64	8.5	OVLAAB060154

See notes on page 26

COMBINATION RATINGS CONTINUED

Unit Size – Series	Indoor Model	Clg. Cap.	ARI Standard Ratings										
			Cooling					Heating					Furnace Model
			Factory Enhance	Std. Rating	SEER TDR	PU-RON TXV	EER	High Temp		Low Temp		HSPF	
								E Cap.	E COP	H Cap.	H COP		
	*FX4DN(B,F)061	58,000	TDR&TXV	15.0			12.5	57,500	3.84	35,400	2.68	8.5	
	FB4CNF060	56,500	TDR&TXV	14.0			11.5	57,500	3.66	35,800	2.58	8.2	
	FE4ANB006	58,000	TDR&TXV	15.0			12.5	57,500	3.84	35,600	2.68	8.5	
	FV4CNB006	58,000	TDR&TXV	15.0			12.5	57,500	3.84	35,600	2.68	8.5	
	FY5BNB060	57,000	TDR&TXV	13.5			11.5	58,500	3.66	36,400	2.56	8.2	
	CAP**6021A**	56,500	TXV		13.5		11.5	58,000	3.66	36,200	2.58	8.2	
	CAP**6021A**	56,500	TDR&TXV	13.5			11.5	57,500	3.64	36,000	2.58	8.2	58CV(A,X)110–20
	CAP**6021A**	56,500	TDR&TXV	14.0			12.0	57,500	3.70	35,600	2.60	8.2	58PH*110–20
	CAP**6021A**	56,500	TDR&TXV	14.0			12.0	57,000	3.66	35,400	2.58	8.2	58MEC100–20
	CAP**6024A**	56,500	TXV		13.5		11.5	58,000	3.66	36,200	2.58	8.2	
	CAP**6024A**	56,500	TDR&TXV	14.0			12.0	57,500	3.70	35,600	2.60	8.2	58CV(A,X)135–22
	CAP**6024A**	57,000	TDR&TXV	14.5			12.0	57,000	3.74	35,600	2.62	8.2	58CV(A,X)155–22
	CAP**6024A**	56,500	TDR&TXV	14.0			12.0	57,500	3.66	35,600	2.60	8.2	58PH*135–20
	CAP**6024A**	56,500	TDR&TXV	14.5			12.0	57,000	3.70	35,400	2.62	8.2	58MEC120–20
	CAP**6024A**	56,500	TDR&TXV	14.0			12.0	57,500	3.68	35,600	2.60	8.2	OVLAAB060154
	CAP**6025A**	56,500	TXV		13.5		11.5	58,000	3.66	36,200	2.58	8.2	
	CAP**6025A**	56,500	TDR&TXV	13.5			11.5	58,000	3.62	36,400	2.54	8.2	58HDV100––20
	CAP**6025A**	56,500	TDR&TXV	14.0			12.0	57,500	3.68	35,600	2.60	8.2	OVLAAB060154
	CNPH*6024A**	56,500	TXV		13.5		11.5	58,000	3.64	36,200	2.56	8.2	
	CNPH*6024A**	56,500	TDR&TXV	14.0			11.5	57,500	3.66	35,800	2.58	8.2	58CV(A,X)110–20
	CNPH*6024A**	56,500	TDR&TXV	14.0			12.0	57,000	3.70	35,600	2.60	8.2	58CV(A,X)135–22
	CNPH*6024A**	57,000	TDR&TXV	14.5			12.0	57,000	3.72	35,400	2.62	8.2	58CV(A,X)155–22
	CNPH*6024A**	56,500	TDR&TXV	14.0			12.0	57,000	3.70	35,600	2.62	8.2	58PH*110–20
	CNPH*6024A**	56,500	TDR&TXV	14.0			12.0	57,000	3.66	35,600	2.60	8.2	58PH*135–20
	CNPH*6024A**	56,000	TDR&TXV	13.5			11.5	57,000	3.58	35,600	2.54	8.2	58MEC080–16
	CNPH*6024A**	56,500	TDR&TXV	14.0			12.0	57,000	3.66	35,400	2.60	8.1	58MEC100–20
	CNPH*6024A**	56,500	TDR&TXV	14.5			12.0	57,000	3.70	35,400	2.62	8.2	58MEC120–20
	CNPH*6024A**	56,500	TDR&TXV	13.0			11.2	58,500	3.60	36,800	2.52	8.0	58HDV080––20
	CNPH*6024A**	56,500	TDR&TXV	13.5			11.5	58,000	3.62	36,400	2.54	8.0	58HDV100––20
	CNPH*6024A**	56,500	TDR&TXV	14.0			12.0	57,000	3.66	35,600	2.60	8.2	OVLAAB060154
	CNPH*6124A**	57,000	TXV	14.0	13.5		11.5	58,000	3.70	36,200	2.58	8.2	
	CNPH*6124A**	57,000	TDR&TXV	14.0			11.5	58,000	3.70	36,000	2.58	8.2	58CV(A,X)110–20
	CNPH*6124A**	57,000	TDR&TXV	14.0			12.0	57,500	3.74	35,800	2.62	8.2	58CV(A,X)135–22
	CNPH*6124A**	57,000	TDR&TXV	14.5			12.0	57,500	3.78	35,600	2.64	8.5	58CV(A,X)155–22
60–30	CNPH*6124A**	57,000	TDR&TXV	14.0			12.0	57,500	3.74	35,600	2.62	8.2	58PH*110–20
	CNPH*6124A**	56,500	TDR&TXV	14.0			12.0	57,500	3.70	35,600	2.60	8.2	58PH*135–20
	CNPH*6124A**	56,500	TDR&TXV	14.0			12.0	57,500	3.70	35,600	2.60	8.2	58MEC100–20
	CNPH*6124A**	57,000	TDR&TXV	14.5			12.0	57,000	3.72	35,400	2.62	8.2	58MEC120–20
	CNPH*6124A**	57,000	TDR&TXV	13.5			11.5	59,000	3.66	37,000	2.54	8.2	58HDV080––20
	CNPH*6124A**	57,000	TDR&TXV	13.5			11.5	58,500	3.66	36,600	2.56	8.2	58HDV100––20
	CNPH*6124A**	57,000	TDR&TXV	14.0			12.0	57,500	3.72	35,800	2.60	8.2	OVLAAB060154
	CNPV*6024A**	56,500	TXV		13.5		11.5	58,000	3.64	36,200	2.56	8.2	
	CNPV*6024A**	56,500	TDR&TXV	14.0			12.0	57,000	3.70	35,600	2.60	8.2	58CV(A,X)135–22
	CNPV*6024A**	57,000	TDR&TXV	14.5			12.0	57,000	3.72	35,400	2.62	8.2	58CV(A,X)155–22
	CNPV*6024A**	56,500	TDR&TXV	14.0			12.0	57,000	3.66	35,600	2.60	8.2	58PH*135–20
	CNPV*6024A**	56,500	TDR&TXV	14.5			12.0	57,000	3.70	35,400	2.62	8.2	58MEC120–20
	CNPV*6024A**	56,500	TDR&TXV	13.5			11.5	58,000	3.62	36,400	2.54	8.0	58HDV100––20
	CNPV*6024A**	56,500	TDR&TXV	14.0			12.0	57,000	3.68	35,600	2.60	8.2	OVLAAB060154
	CNPV*6124A**	57,500	TXV		14.0		11.5	58,000	3.74	36,200	2.60	8.2	
	CNPV*6124A**	57,000	TDR&TXV	14.0			11.5	58,000	3.72	36,000	2.60	8.2	58MV(B,C)120–20
	CNPV*6124A**	57,500	TDR&TXV	14.5			12.0	57,500	3.80	35,600	2.64	8.2	58CV(A,X)135–22
	CNPV*6124A**	57,500	TDR&TXV	14.5			12.0	57,500	3.82	35,600	2.66	8.5	58CV(A,X)155–22
	CNPV*6124A**	57,500	TDR&TXV	14.5			12.0	57,500	3.76	35,800	2.64	8.5	58PH*135–20
	CNPV*6124A**	57,500	TDR&TXV	14.5			12.0	57,500	3.80	35,600	2.66	8.5	58MEC120–20
	CNPV*6124A**	57,500	TDR&TXV	13.5			11.5	58,500	3.72	36,600	2.58	8.2	58HDV100––20
	CNPV*6124A**	57,500	TDR&TXV	14.5			12.0	57,500	3.76	35,600	2.64	8.5	OVLAAB060154
	CSPH*6012A**	57,000	TXV		13.5		11.5	58,000	3.70	36,200	2.58	8.2	
	CSPH*6012A**	56,500	TDR&TXV	14.0			11.5	57,500	3.68	36,000	2.58	8.2	58MV(B,C)120–20
	CSPH*6012A**	57,000	TDR&TXV	14.0			11.5	57,500	3.70	35,800	2.60	8.2	58CV(A,X)110–20
	CSPH*6012A**	57,000	TDR&TXV	14.5			12.0	57,500	3.74	35,600	2.62	8.2	58CV(A,X)135–22
	CSPH*6012A**	57,000	TDR&TXV	14.5			12.0	57,500	3.78	35,600	2.64	8.5	58CV(A,X)155–22
	CSPH*6012A**	57,000	TDR&TXV	14.5			12.0	57,500	3.76	35,600	2.64	8.2	58PH*110–20
	CSPH*6012A**	57,000	TDR&TXV	14.0			12.0	57,500	3.72	35,600	2.62	8.2	58PH*135–20
	CSPH*6012A**	56,500	TDR&TXV	14.0			11.5	57,500	3.64	35,800	2.56	8.2	58MEC080–16
	CSPH*6012A**	57,000	TDR&TXV	14.0			12.0	57,500	3.72	35,600	2.62	8.2	58MEC100–20
	CSPH*6012A**	57,000	TDR&TXV	14.5			12.0	57,000	3.74	35,400	2.64	8.2	58MEC120–20
	CSPH*6012A**	57,000	TDR&TXV	13.0			11.5	59,000	3.66	37,000	2.54	8.2	58HDV080––20
	CSPH*6012A**	57,000	TDR&TXV	13.5			11.5	58,500	3.68	36,600	2.56	8.2	58HDV100––20
	CSPH*6012A**	57,000	TDR&TXV	14.0			12.0	57,500	3.72	35,600	2.62	8.2	OVLAAB060154

†Tested combination.

* Ratings are net values reflecting the effects of circulating fan heat. Supplemental electric heat is not included. Ratings are based on:

Cooling Standard: 80°F (27°C) db 67°F (19°C) wb indoor entering air temperature and 95°F (35°C) db air entering outdoor unit.

High–Temp Heating Standard: 70°F (21°C) db indoor entering air temperature and 47°F (8°C) db 43°F (6°C) wb air entering outdoor unit.

Low–Temp Heating Standard: 70°F (21°C) db indoor entering air temperature and 17°F (–8°C) db 15°F (–9°C) wb air entering outdoor unit.

COP — Coefficient of Performance

EER — Energy Efficiency Ratio

HSPF — Heating Seasonal Performance Factor

SEER — Seasonal Energy Efficiency Ratio

TDR — Time–Delay Relay

UI — User Interface

NOTE: Ratings contained in this document are subject to change at any time. Always refer to the AHRI directory (www.ahridirectory.org) for the most up–to–date ratings information.

DETAILED COOLING CAPACITIES#

Evaporator Air		CONDENSER ENTERING AIR TEMPERATURES deg F																	
		75			85			95			105			115			125		
CFM	EWB	Capacity MBtuh†		Total System KW**	Capacity MBtuh†		Total System KW**	Capacity MBtuh†		Total System KW**	Capacity MBtuh†		Total System KW**	Capacity MBtuh†		Total System KW**	Capacity MBtuh†		Total System KW**
		Total	Sens‡		Total	Sens‡		Total	Sens‡		Total	Sens‡		Total	Sens‡		Total	Sens‡	
25HNB518A**30 Outdoor Section With FX4DNF019 Indoor Section																			
525	72	21.62	11.10	1.11	20.57	10.70	1.27	19.46	10.28	1.44	18.30	9.85	1.62	17.07	9.40	1.82	15.77	8.93	2.05
	67	19.59	13.52	1.11	18.63	13.12	1.27	17.62	12.70	1.43	16.56	12.26	1.61	15.43	11.81	1.81	14.23	11.33	2.04
	63††	18.12	13.00	1.12	17.24	12.60	1.27	16.30	12.18	1.43	15.31	11.74	1.60	14.25	11.28	1.81	13.13	10.80	2.03
	62	17.74	15.88	1.12	16.88	15.47	1.27	15.97	15.04	1.43	15.02	14.58	1.60	14.07	14.07	1.80	13.18	13.18	2.03
	57	16.99	16.99	1.12	16.33	16.33	1.27	15.62	15.62	1.43	14.86	14.86	1.60	14.04	14.04	1.80	13.16	13.16	2.03
600	72	22.12	11.69	1.12	21.02	11.28	1.28	19.86	10.85	1.45	18.65	10.41	1.63	17.36	9.95	1.83	16.01	9.47	2.06
	67	20.06	14.44	1.12	19.06	14.03	1.28	18.00	13.60	1.44	16.89	13.15	1.62	15.71	12.69	1.82	14.47	12.20	2.05
	63††	18.58	13.86	1.12	17.65	13.45	1.28	16.66	13.02	1.44	15.63	12.57	1.62	14.53	12.10	1.82	13.36	11.61	2.05
	62	18.21	17.11	1.12	17.32	16.68	1.28	16.39	16.30	1.44	15.54	15.54	1.61	14.66	14.66	1.82	13.71	13.71	2.05
	57	17.81	17.81	1.12	17.09	17.09	1.28	16.33	16.33	1.44	15.51	15.51	1.61	14.64	14.64	1.82	13.69	13.69	2.05
675	72	22.51	12.24	1.13	21.36	11.82	1.29	20.17	11.39	1.46	18.91	10.94	1.64	17.58	10.48	1.84	16.20	10.00	2.07
	67	20.43	15.33	1.13	19.38	14.90	1.29	18.29	14.47	1.45	17.14	14.01	1.63	15.93	13.53	1.83	14.66	13.03	2.06
	63††	18.94	14.69	1.13	17.96	14.27	1.29	16.94	13.83	1.45	15.87	13.37	1.63	14.74	12.89	1.83	13.55	12.38	2.06
	62	18.63	18.24	1.13	17.76	17.76	1.28	16.95	16.95	1.45	16.08	16.08	1.63	15.15	15.15	1.83	14.15	14.15	2.06
	57	18.50	18.50	1.13	17.74	17.74	1.28	16.92	16.92	1.45	16.06	16.06	1.63	15.13	15.13	1.83	14.13	14.13	2.06

COOLING INDOOR MODEL	CAPACITY	POWER	FURNACE MODEL
*FX4DNF019	1.00	1.00	
FB4CNF018	0.98	1.01	
FB4CNF024	0.98	1.02	
FE4ANF002	0.99	0.99	
FF1ENP018	0.96	1.09	
FF1ENP019	0.98	1.02	
FF1ENP024	0.97	1.09	
FF1ENP025	1.00	1.00	
FV4CNF002	0.99	0.99	
FX4DNF025	1.00	1.00	
FY5BNF018	0.98	1.06	
FY5BNF024	0.98	1.07	
CAP**1814A**	0.96	1.09	
CAP**2414A**	0.98	1.09	
CAP**2417A**	0.98	1.09	
CNPF*2418A**	0.98	1.09	
CNPH*2417A**	0.98	1.11	
CNPV*1814A**	0.97	1.10	
CNPV*1917A**	0.99	1.10	
CNPV*2414A**	0.98	1.09	
CNPV*2417A**	0.98	1.09	
CSPH*2412A**	0.99	1.10	
CAP**2417A**	1.00	1.00	353BAV036060
CAP**1814A**	0.96	1.00	58CV(A,X)070–12
CAP**2414A**	0.97	1.00	58CV(A,X)070–12
CNPH*2417A**	0.97	1.00	58CV(A,X)070–12
CNPV*1814A**	0.97	0.99	58CV(A,X)070–12
CNPV*2414A**	0.97	1.00	58CV(A,X)070–12
CSPH*2412A**	0.98	1.00	58CV(A,X)070–12
CAP**2417A**	0.98	1.00	58CV(A,X)090–16
CNPH*2417A**	0.98	1.00	58CV(A,X)090–16
CNPV*1917A**	0.98	0.98	58CV(A,X)090–16
CNPV*2417A**	0.98	1.00	58CV(A,X)090–16
CSPH*2412A**	0.98	1.01	58CV(A,X)090–16
CNPH*2417A**	1.00	1.04	58HDV040––12
CSPH*2412A**	1.00	1.04	58HDV040––12
CNPH*2417A**	1.00	1.02	58HDV060––12
CSPH*2412A**	1.00	1.02	58HDV060––12
CAP**2417A**	1.00	0.98	58MEB040–12

COOLING INDOOR MODEL	CAPACITY	POWER	FURNACE MODEL
CNPH*2417A**	1.00	1.00	58MEB040–12
CNPV*1917A**	1.00	0.98	58MEB040–12
CNPV*2417A**	1.00	1.00	58MEB040–12
CSPH*2412A**	1.00	1.00	58MEB040–12
CNPH*2417A**	0.99	0.99	58MEC060–12
CNPV*1917A**	1.00	0.98	58MEC060–12
CNPV*2417A**	0.99	0.99	58MEC060–12
CSPH*2412A**	0.99	0.99	58MEC060–12
CAP**2417A**	0.97	1.00	58MV(B,C)060–14
CNPH*2417A**	0.97	1.00	58MV(B,C)060–14
CNPV*1917A**	0.98	1.01	58MV(B,C)060–14
CNPV*2417A**	0.97	1.00	58MV(B,C)060–14
CSPH*2412A**	0.98	1.01	58MV(B,C)060–14
CNPH*2417A**	0.97	1.00	58MV(B,C)080–14
CSPH*2412A**	0.98	1.00	58MV(B,C)080–14
CNPH*2417A**	0.97	1.00	58MVB040–14
CSPH*2412A**	0.98	1.01	58MVB040–14
CAP**1814A**	0.97	1.01	58PH*045–08
CAP**2414A**	0.99	1.01	58PH*045–08
CNPH*2417A**	0.99	1.01	58PH*045–08
CNPV*1814A**	0.98	1.00	58PH*045–08
CNPV*2414A**	0.99	1.01	58PH*045–08
CSPH*2412A**	0.99	1.02	58PH*045–08
CAP**2417A**	0.99	1.02	OVLAAB036098
CNPH*2417A**	0.99	1.02	OVLAAB036098
CNPV*1917A**	1.00	1.02	OVLAAB036098
CNPV*2417A**	0.99	1.02	OVLAAB036098
CSPH*2412A**	1.00	1.02	OVLAAB036098
CAP**2417A**	1.00	1.02	OVMAAB036098
CNPH*2417A**	1.00	1.02	OVMAAB036098
CNPV*1917A**	1.00	1.02	OVMAAB036098
CNPV*2417A**	1.00	1.02	OVMAAB036098
CSPH*2412A**	1.00	1.02	OVMAAB036098

See notes on pg. 37

DETAILED COOLING CAPACITIES# CONTINUED

Evaporator Air		CONDENSER ENTERING AIR TEMPERATURES deg F																	
		75			85			95			105			115			125		
CFM	EWB	Capacity MBtuh†		Total System KW**	Capacity MBtuh†		Total System KW**	Capacity MBtuh†		Total System KW**	Capacity MBtuh†		Total System KW**	Capacity MBtuh†		Total System KW**	Capacity MBtuh†		Total System KW**
		Total	Sens‡		Total	Sens‡		Total	Sens‡		Total	Sens‡		Total	Sens‡		Total	Sens‡	
25HNB524A* Outdoor Section With FX4DNF025 Indoor Section																			
700	72	28.48	14.67	1.52	27.27	14.21	1.71	25.97	13.71	1.93	24.58	13.19	2.16	23.07	12.63	2.43	21.41	12.03	2.73
	67	25.85	17.92	1.49	24.72	17.44	1.68	23.53	16.94	1.90	22.23	16.40	2.13	20.83	15.83	2.40	19.28	15.20	2.71
	63††	23.96	17.24	1.48	22.90	16.76	1.67	21.77	16.25	1.88	20.55	15.71	2.12	19.23	15.13	2.39	17.76	14.49	2.70
	62	23.47	21.08	1.47	22.44	20.58	1.67	21.35	20.06	1.88	20.17	19.48	2.12	18.93	18.84	2.39	17.74	17.74	2.70
	57	22.49	22.49	1.47	21.68	21.68	1.67	20.82	20.82	1.88	19.89	19.89	2.12	18.86	18.86	2.39	17.71	17.71	2.70
800	72	29.11	15.41	1.54	27.83	14.93	1.74	26.49	14.44	1.95	25.04	13.91	2.19	23.46	13.34	2.46	21.75	12.73	2.76
	67	26.43	19.09	1.51	25.25	18.60	1.71	24.00	18.09	1.92	22.66	17.55	2.16	21.19	16.96	2.43	19.60	16.32	2.73
	63††	24.51	18.34	1.50	23.40	17.84	1.69	22.23	17.33	1.90	20.96	16.77	2.14	19.58	16.18	2.41	18.07	15.53	2.72
	62	24.06	22.64	1.49	22.99	22.10	1.69	21.87	21.51	1.90	20.75	20.75	2.14	19.65	19.65	2.41	18.44	18.44	2.72
	57	23.49	23.49	1.49	22.64	22.64	1.69	21.72	21.72	1.90	20.72	20.72	2.14	19.63	19.63	2.41	18.41	18.41	2.72
900	72	29.58	16.11	1.57	28.27	15.63	1.77	26.87	15.12	1.98	25.38	14.59	2.22	23.76	14.01	2.48	22.00	13.39	2.78
	67	26.87	20.21	1.53	25.65	19.71	1.73	24.36	19.19	1.94	22.98	18.63	2.18	21.48	18.03	2.45	19.85	17.38	2.75
	63††	24.94	19.38	1.52	23.79	18.88	1.71	22.57	18.35	1.93	21.27	17.78	2.16	19.86	17.17	2.43	18.31	16.50	2.74
	62	24.56	24.04	1.52	23.48	23.48	1.71	22.50	22.50	1.92	21.45	21.45	2.16	20.29	20.29	2.44	19.02	19.02	2.74
	57	24.35	24.35	1.51	23.44	23.44	1.71	22.47	22.47	1.92	21.42	21.42	2.16	20.27	20.27	2.43	18.99	18.99	2.74

COOLING INDOOR MODEL	CAPACITY	POWER	FURNACE MODEL
*FX4DNF025	1.00	1.00	
FB4CNF024	0.98	1.07	
FB4CNF030	1.00	1.02	
FE4AN(B,F)003	1.00	1.00	
FE4ANF002	1.00	1.00	
FF1ENP024	0.98	1.12	
FF1ENP025	1.00	1.04	
FF1ENP030	0.98	1.12	
FF1ENP031	1.00	1.04	
FF1ENP037	1.00	1.04	
FV4CN(B,F)003	1.00	1.00	
FV4CNF002	1.00	1.00	
FX4DN(B,F)031	1.00	1.02	
FY5BNF024	1.00	1.09	
FY5BNF030	1.00	1.09	
CAP**2414A**	0.98	1.10	
CAP**2417A**	0.98	1.10	
CAP**3014A**	0.99	1.11	
CAP**3017A**	0.99	1.11	
CNPF*2418A**	0.98	1.10	
CNPH*2417A**	0.98	1.10	
CNPH*3017A**	0.99	1.11	
CNPV*2414A**	0.98	1.10	
CNPV*2417A**	0.98	1.10	
CNPV*3014A**	0.99	1.11	
CNPV*3017A**	0.99	1.11	
CNPV*3117A**	1.00	1.09	
CSPH*2412A**	1.00	1.12	
CSPH*3012A**	1.00	1.12	
CAP**2414A**	0.98	1.00	58CV(A,X)070–12
CAP**3014A**	0.98	1.01	58CV(A,X)070–12
CNPH*2417A**	0.98	1.00	58CV(A,X)070–12
CNPH*3017A**	0.99	0.99	58CV(A,X)070–12
CNPV*2414A**	0.98	1.02	58CV(A,X)070–12
CNPV*3014A**	0.98	1.01	58CV(A,X)070–12
CSPH*2412A**	0.99	1.02	58CV(A,X)070–12
CSPH*3012A**	0.99	0.99	58CV(A,X)070–12
CAP**2417A**	0.98	0.98	58CV(A,X)090–16
CAP**3017A**	0.99	0.99	58CV(A,X)090–16

COOLING INDOOR MODEL	CAPACITY	POWER	FURNACE MODEL
CNPH*2417A**	0.98	1.01	58CV(A,X)090–16
CNPH*3017A**	0.99	0.99	58CV(A,X)090–16
CNPV*2417A**	0.98	1.01	58CV(A,X)090–16
CNPV*3017A**	0.99	0.99	58CV(A,X)090–16
CNPV*3117A**	1.00	1.00	58CV(A,X)090–16
CSPH*2412A**	0.99	0.99	58CV(A,X)090–16
CSPH*3012A**	0.99	0.99	58CV(A,X)090–16
CNPH*2417A**	0.98	1.01	58CV(A,X)110–20
CNPH*3017A**	0.99	0.99	58CV(A,X)110–20
CSPH*2412A**	0.99	1.02	58CV(A,X)110–20
CSPH*3012A**	0.99	0.99	58CV(A,X)110–20
CNPH*2417A**	0.98	1.01	58CV(A,X)135–22
CNPH*3017A**	0.99	0.99	58CV(A,X)135–22
CSPH*2412A**	0.99	1.02	58CV(A,X)135–22
CSPH*3012A**	0.99	0.99	58CV(A,X)135–22
CNPH*2417A**	0.98	1.01	58CV(A,X)155–22
CNPH*3017A**	0.99	0.99	58CV(A,X)155–22
CSPH*2412A**	0.99	0.99	58CV(A,X)155–22
CSPH*3012A**	1.00	1.00	58CV(A,X)155–22
CAP**3619A**	1.00	1.02	58HDV040––12
CNPH*2417A**	0.98	1.02	58HDV040––12
CNPH*3017A**	1.00	1.02	58HDV040––12
CNPH*3117A**	1.00	1.00	58HDV040––12
CSPH*2412A**	0.99	1.03	58HDV040––12
CSPH*3012A**	1.00	1.02	58HDV040––12
CAP**3619A**	1.00	1.02	58HDV060––12
CNPH*2417A**	0.99	1.03	58HDV060––12
CNPH*3017A**	1.00	1.02	58HDV060––12
CNPH*3117A**	1.00	1.00	58HDV060––12
CSPH*2412A**	1.00	1.04	58HDV060––12
CSPH*3012A**	1.00	1.02	58HDV060––12
CAP**2417A**	1.00	1.00	58MEB040–12
CAP**3017A**	1.00	1.00	58MEB040–12
CNPH*2417A**	0.99	0.99	58MEB040–12
CNPH*3017A**	1.00	1.00	58MEB040–12
CNPV*2417A**	0.99	0.99	58MEB040–12
CNPV*3017A**	1.00	1.00	58MEB040–12
CNPV*3117A**	1.00	0.96	58MEB040–12
CSPH*2412A**	1.00	1.00	58MEB040–12

COOLING INDOOR MODEL	CAPACITY	POWER	FURNACE MODEL
CSPH*3012A**	1.00	1.00	58MEB040–12
CAP**2417A**	1.00	1.00	58MEC060–12
CAP**3017A**	1.00	1.00	58MEC060–12
CNPH*2417A**	1.00	1.00	58MEC060–12
CNPH*3017A**	1.00	1.00	58MEC060–12
CNPV*2417A**	1.00	1.00	58MEC060–12
CNPV*3017A**	1.00	1.00	58MEC060–12
CNPV*3117A**	1.00	0.96	58MEC060–12
CSPH*2412A**	1.00	1.00	58MEC060–12
CSPH*3012A**	1.00	1.00	58MEC060–12
CAP**2417A**	1.00	1.00	58MEC080–12
CAP**3017A**	1.00	1.00	58MEC080–12
CNPH*2417A**	0.99	0.99	58MEC080–12
CNPH*3017A**	1.00	1.00	58MEC080–12
CNPV*2417A**	0.99	0.99	58MEC080–12
CNPV*3017A**	1.00	1.00	58MEC080–12
CNPV*3117A**	1.00	1.00	58MEC080–12
CSPH*2412A**	1.00	1.00	58MEC080–12
CSPH*3012A**	1.00	1.00	58MEC080–12
CAP**2417A**	0.99	0.99	58MV(B,C)060–14
CAP**3017A**	1.00	1.00	58MV(B,C)060–14
CNPH*2417A**	0.99	1.02	58MV(B,C)060–14
CNPH*3017A**	1.00	1.00	58MV(B,C)060–14
CNPV*2417A**	0.99	1.02	58MV(B,C)060–14
CNPV*3017A**	1.00	1.00	58MV(B,C)060–14
CNPV*3117A**	1.00	1.00	58MV(B,C)060–14
CSPH*2412A**	1.00	1.00	58MV(B,C)060–14
CSPH*3012A**	1.00	1.00	58MV(B,C)060–14
CNPH*2417A**	0.98	1.01	58MV(B,C)080–14
CNPH*3017A**	0.99	0.99	58MV(B,C)080–14
CSPH*2412A**	0.99	1.02	58MV(B,C)080–14
CSPH*3012A**	0.99	0.99	58MV(B,C)080–14
CNPH*2417A**	0.98	1.00	58MV(B,C)080–20
CNPH*3017A**	0.98	0.98	58MV(B,C)080–20
CSPH*2412A**	0.98	1.01	58MV(B,C)080–20
CSPH*3012A**	0.98	0.98	58MV(B,C)080–20
CNPH*2417A**	0.98	1.01	58MV(B,C)100–20
CNPH*3017A**	0.99	0.99	58MV(B,C)100–20
CSPH*2412A**	0.99	0.99	58MV(B,C)100–20

DETAILED COOLING CAPACITIES# CONTINUED

25HNB524A* Outdoor Section With FX4DNF025 Indoor Section

COOLING INDOOR MODEL	CAPACITY	POWER	FURNACE MODEL
CSPH*3012A**	0.99	0.99	58MV(B,C)100–20
CNPH*2417A**	0.98	1.01	58MV(B,C)120–20
CNPH*3017A**	1.00	1.00	58MV(B,C)120–20
CSPH*2412A**	1.00	1.00	58MV(B,C)120–20
CSPH*3012A**	1.00	1.00	58MV(B,C)120–20
CNPH*2417A**	0.98	1.01	58MVB040–14
CNPH*3017A**	0.99	0.99	58MVB040–14
CSPH*2412A**	0.99	1.02	58MVB040–14
CSPH*3012A**	0.99	0.99	58MVB040–14
CAP**2414A**	0.99	1.02	58PH*045–08
CAP**3014A**	1.00	1.02	58PH*045–08
CNPH*2417A**	0.98	1.02	58PH*045–08
CNPH*3017A**	1.00	1.02	58PH*045–08
CNPV*2414A**	0.98	1.02	58PH*045–08
CNPV*3014A**	0.99	1.02	58PH*045–08
CSPH*2412A**	0.99	1.02	58PH*045–08
CSPH*3012A**	1.00	1.02	58PH*045–08
CAP**2417A**	1.00	1.04	OVLAAB036098
CAP**3017A**	1.00	1.02	OVLAAB036098
CNPH*2417A**	1.00	1.04	OVLAAB036098
CNPH*3017A**	1.00	1.02	OVLAAB036098
CNPH*3117A**	1.00	1.00	OVLAAB036098
CNPV*2417A**	1.00	1.04	OVLAAB036098
CNPV*3017A**	1.00	1.02	OVLAAB036098
CNPV*3117A**	1.00	1.00	OVLAAB036098
CSPH*2412A**	1.00	1.04	OVLAAB036098
CSPH*3012A**	1.00	1.02	OVLAAB036098
CAP**2417A**	1.00	1.04	OVMAAB036098
CAP**3017A**	1.00	1.02	OVMAAB036098
CNPH*2417A**	0.99	1.03	OVMAAB036098
CNPH*3017A**	1.00	1.02	OVMAAB036098
CNPH*3117A**	1.00	1.02	OVMAAB036098
CNPV*2417A**	0.99	1.03	OVMAAB036098
CNPV*3017A**	1.00	1.02	OVMAAB036098
CNPV*3117A**	1.00	1.02	OVMAAB036098
CSPH*2412A**	1.00	1.04	OVMAAB036098
CSPH*3012A**	1.00	1.02	OVMAAB036098
CAP**2417A**	0.99	1.02	OVMAAB042112
CAP**3017A**	1.00	1.02	OVMAAB042112
CNPH*2417A**	0.99	1.02	OVMAAB042112
CNPH*3017A**	1.00	1.02	OVMAAB042112
CNPH*3117A**	1.00	1.00	OVMAAB042112
CNPV*2417A**	0.99	1.02	OVMAAB042112
CNPV*3017A**	1.00	1.02	OVMAAB042112
CNPV*3117A**	1.00	1.00	OVMAAB042112
CSPH*2412A**	1.00	1.02	OVMAAB042112
CSPH*3012A**	1.00	1.02	OVMAAB042112

See notes on pg. 37

DETAILED COOLING CAPACITIES# CONTINUED

Evaporator Air		CONDENSER ENTERING AIR TEMPERATURES deg F																	
		75			85			95			105			115			125		
CFM	EWB	Capacity MBtuh†		Total System KW**	Capacity MBtuh†		Total System KW**	Capacity MBtuh†		Total System KW**	Capacity MBtuh†		Total System KW**	Capacity MBtuh†		Total System KW**	Capacity MBtuh†		Total System KW**
		Total	Sens‡		Total	Sens‡		Total	Sens‡		Total	Sens‡		Total	Sens‡		Total	Sens‡	
25HNB530A**30 Outdoor Section With FX4DN(B,F)031 Indoor Section																			
875	72	34.43	17.43	1.86	32.86	16.85	2.06	31.21	16.24	2.29	29.48	15.62	2.55	27.60	14.95	2.84	25.58	14.24	3.17
	67	31.21	21.41	1.85	29.79	20.83	2.05	28.29	20.22	2.28	26.70	19.59	2.53	24.98	18.91	2.83	23.11	18.18	3.16
	63††	28.90	20.58	1.84	27.58	20.00	2.05	26.18	19.39	2.27	24.70	18.75	2.53	23.09	18.07	2.82	21.33	17.32	3.16
	62	28.35	25.28	1.84	27.08	24.67	2.05	25.75	24.02	2.27	24.35	23.29	2.53	22.94	22.94	2.82	21.54	21.54	3.16
	57	27.41	27.41	1.84	26.40	26.40	2.04	25.33	25.33	2.27	24.17	24.17	2.53	22.91	22.91	2.82	21.51	21.51	3.16
1000	72	35.12	18.31	1.88	33.47	17.71	2.09	31.76	17.10	2.32	29.95	16.46	2.57	28.01	15.78	2.86	25.92	15.06	3.20
	67	31.86	22.82	1.87	30.36	22.22	2.08	28.80	21.60	2.30	27.15	20.95	2.56	25.36	20.25	2.85	23.45	19.50	3.19
	63††	29.51	21.88	1.87	28.12	21.28	2.07	26.68	20.67	2.30	25.13	20.01	2.55	23.47	19.31	2.85	21.66	18.54	3.19
	62	29.05	27.10	1.87	27.74	26.42	2.07	26.40	26.40	2.30	25.15	25.15	2.55	23.80	23.80	2.85	22.31	22.31	3.19
	57	28.58	28.58	1.87	27.50	27.50	2.07	26.35	26.35	2.30	25.12	25.12	2.55	23.77	23.77	2.85	22.28	22.28	3.19
1125	72	35.65	19.14	1.91	33.95	18.52	2.12	32.17	17.90	2.34	30.31	17.26	2.60	28.32	16.57	2.89	26.17	15.84	3.22
	67	32.35	24.15	1.90	30.80	23.54	2.10	29.19	22.91	2.33	27.48	22.24	2.58	25.67	21.52	2.88	23.70	20.73	3.21
	63††	29.99	23.12	1.89	28.55	22.51	2.10	27.05	21.87	2.32	25.46	21.20	2.58	23.76	20.47	2.87	21.92	19.66	3.21
	62	29.68	29.50	1.89	28.46	28.46	2.10	27.24	27.24	2.32	25.94	25.94	2.58	24.52	24.52	2.87	22.95	22.95	3.21
	57	29.56	29.56	1.89	28.42	28.42	2.10	27.20	27.20	2.32	25.91	25.91	2.58	24.49	24.49	2.87	22.92	22.92	3.21

COOLING INDOOR MODEL	CAPACITY	POWER	FURNACE MODEL
*FX4DN(B,F)031	1.00	1.00	
FB4CNF030	0.99	1.03	
FB4CNF036	0.99	1.03	
FE4AN(B,F)003	0.99	0.99	
FE4ANF002	0.99	1.01	
FF1ENP030	0.97	1.09	
FF1ENP031	0.99	1.03	
FF1ENP036	0.99	1.09	
FF1ENP037	0.99	1.06	
FV4CN(B,F)003	0.99	0.99	
FV4CNF002	0.99	1.01	
FX4DN(B,F)037	1.02	1.02	
FY5BNF030	0.99	1.03	
FY5BNF036	0.99	1.08	
CAP**3014A**	0.98	1.09	
CAP**3017A**	0.98	1.09	
CAP**3614A**	0.99	1.10	
CAP**3617A**	0.99	1.10	
CAP**3619A**	0.99	1.10	
CAP**3621A**	0.99	1.10	
CNPF*3618A**	0.98	1.09	
CNPH*3017A**	0.98	1.09	
CNPH*3617A**	0.98	1.09	
CNPV*3014A**	0.98	1.09	
CNPV*3017A**	0.98	1.09	
CNPV*3117A**	1.01	1.11	
CNPV*3617A**	0.98	1.09	
CNPV*3621A**	0.98	1.09	
CNPV*3717A**	1.01	1.10	
CSPH*3012A**	0.99	1.10	
CSPH*3612A**	1.00	1.11	
CAP**3014A**	0.97	1.01	58CV(A,X)070–12
CAP**3614A**	0.98	1.02	58CV(A,X)070–12
CNPH*3017A**	0.98	1.02	58CV(A,X)070–12
CNPH*3617A**	0.98	1.02	58CV(A,X)070–12
CNPV*3014A**	0.97	1.01	58CV(A,X)070–12
CSPH*3012A**	0.98	1.02	58CV(A,X)070–12
CSPH*3612A**	0.99	1.02	58CV(A,X)070–12
CAP**3017A**	0.98	1.00	58CV(A,X)090–16

COOLING INDOOR MODEL	CAPACITY	POWER	FURNACE MODEL
CAP**3617A**	0.98	1.00	58CV(A,X)090–16
CNPH*3017A**	0.98	1.00	58CV(A,X)090–16
CNPH*3617A**	0.98	1.00	58CV(A,X)090–16
CNPV*3017A**	0.98	1.00	58CV(A,X)090–16
CNPV*3117A**	1.00	1.00	58CV(A,X)090–16
CNPV*3617A**	0.98	1.00	58CV(A,X)090–16
CNPV*3717A**	1.01	1.00	58CV(A,X)090–16
CSPH*3012A**	0.98	1.00	58CV(A,X)090–16
CSPH*3612A**	1.00	1.00	58CV(A,X)090–16
CAP**3621A**	0.99	1.01	58CV(A,X)110–20
CNPH*3017A**	0.98	1.00	58CV(A,X)110–20
CNPH*3617A**	0.98	1.00	58CV(A,X)110–20
CNPV*3621A**	0.98	1.00	58CV(A,X)110–20
CSPH*3012A**	0.99	1.01	58CV(A,X)110–20
CSPH*3612A**	1.00	1.00	58CV(A,X)110–20
CNPH*3017A**	0.98	1.00	58CV(A,X)135–22
CNPH*3617A**	0.98	1.00	58CV(A,X)135–22
CSPH*3012A**	0.99	1.01	58CV(A,X)135–22
CSPH*3612A**	1.00	1.00	58CV(A,X)135–22
CNPH*3017A**	0.98	1.00	58CV(A,X)155–22
CNPH*3617A**	0.98	1.00	58CV(A,X)155–22
CSPH*3012A**	0.99	1.01	58CV(A,X)155–22
CSPH*3612A**	1.00	1.00	58CV(A,X)155–22
CAP**3619A**	0.98	1.02	58HDV040––12
CAP**3619A**	0.98	1.02	58HDV040––12
CNPH*3017A**	0.98	1.05	58HDV040––12
CNPH*3117A**	1.00	1.04	58HDV040––12
CNPH*3617A**	0.98	1.05	58HDV040––12
CSPH*3012A**	0.98	1.05	58HDV040––12
CSPH*3612A**	1.00	1.04	58HDV040––12
CAP**3619A**	0.99	1.03	58HDV060––12
CAP**3619A**	0.99	1.03	58HDV060––12
CNPH*3017A**	0.99	1.03	58HDV060––12
CNPH*3117A**	1.01	1.05	58HDV060––12
CNPH*3617A**	0.99	1.03	58HDV060––12
CSPH*3012A**	0.99	1.03	58HDV060––12
CSPH*3612A**	1.01	1.05	58HDV060––12
CAP**3017A**	0.99	1.02	58MEB040–12
CAP**3617A**	0.99	1.02	58MEB040–12

COOLING INDOOR MODEL	CAPACITY	POWER	FURNACE MODEL
CNPH*3017A**	0.99	1.02	58MEB040–12
CNPH*3617A**	0.99	1.02	58MEB040–12
CNPV*3017A**	0.99	1.02	58MEB040–12
CNPV*3117A**	1.01	1.01	58MEB040–12
CNPV*3617A**	0.99	1.02	58MEB040–12
CNPV*3717A**	1.03	0.99	58MEB040–12
CSPH*3012A**	0.99	1.02	58MEB040–12
CSPH*3612A**	1.01	1.01	58MEB040–12
CAP**3017A**	0.99	1.02	58MEC060–12
CAP**3617A**	0.99	1.02	58MEC060–12
CNPH*3017A**	0.99	1.02	58MEC060–12
CNPH*3617A**	0.99	1.02	58MEC060–12
CNPV*3017A**	0.99	1.02	58MEC060–12
CNPV*3117A**	1.01	1.01	58MEC060–12
CNPV*3617A**	0.99	1.02	58MEC060–12
CNPV*3717A**	1.03	1.01	58MEC060–12
CSPH*3012A**	0.99	1.02	58MEC060–12
CSPH*3612A**	1.01	1.01	58MEC060–12
CAP**3017A**	0.99	1.01	58MEC080–12
CAP**3617A**	0.99	1.02	58MEC080–12
CNPH*3017A**	0.99	1.01	58MEC080–12
CNPH*3617A**	0.99	1.01	58MEC080–12
CNPV*3017A**	0.99	1.01	58MEC080–12
CNPV*3117A**	1.01	1.01	58MEC080–12
CNPV*3617A**	0.99	1.01	58MEC080–12
CNPV*3717A**	1.03	1.01	58MEC080–12
CSPH*3012A**	0.99	1.01	58MEC080–12
CSPH*3612A**	1.01	1.01	58MEC080–12
CAP**3017A**	0.99	1.02	58MEC080–16
CAP**3617A**	1.00	1.02	58MEC080–16
CNPH*3017A**	0.99	1.02	58MEC080–16
CNPH*3617A**	0.99	1.02	58MEC080–16
CNPV*3017A**	0.99	1.02	58MEC080–16
CNPV*3117A**	1.02	1.02	58MEC080–16
CNPV*3617A**	0.99	1.02	58MEC080–16
CNPV*3717A**	1.03	1.02	58MEC080–16
CSPH*3012A**	0.99	1.02	58MEC080–16
CSPH*3612A**	1.02	1.02	58MEC080–16
CAP**3017A**	0.98	1.00	58MV(B,C)060–14

DETAILED COOLING CAPACITIES# CONTINUED

25HNB530A30 Outdoor Section With FX4DN(B,F)031 Indoor Section**

COOLING INDOOR MODEL	CAPACITY	POWER	FURNACE MODEL
CAP**3617A**	0.99	1.01	58MV(B,C)060–14
CNPH*3017A**	0.99	1.01	58MV(B,C)060–14
CNPH*3617A**	0.99	1.01	58MV(B,C)060–14
CNPV*3017A**	0.99	1.01	58MV(B,C)060–14
CNPV*3117A**	1.01	1.01	58MV(B,C)060–14
CNPV*3617A**	0.99	1.01	58MV(B,C)060–14
CNPV*3717A**	1.02	1.00	58MV(B,C)060–14
CSPH*3012A**	0.99	1.01	58MV(B,C)060–14
CSPH*3612A**	1.01	1.01	58MV(B,C)060–14
CAP**3621A**	0.98	1.00	58MV(B,C)080–14
CNPH*3017A**	0.97	1.01	58MV(B,C)080–14
CNPH*3617A**	0.97	1.01	58MV(B,C)080–14
CNPV*3621A**	0.97	1.01	58MV(B,C)080–14
CSPH*3012A**	0.98	1.02	58MV(B,C)080–14
CSPH*3612A**	0.99	1.02	58MV(B,C)080–14
CAP**3621A**	0.98	1.00	58MV(B,C)080–20
CNPH*3017A**	0.98	1.00	58MV(B,C)080–20
CNPH*3617A**	0.98	1.00	58MV(B,C)080–20
CNPV*3621A**	0.98	1.00	58MV(B,C)080–20
CSPH*3012A**	0.98	1.00	58MV(B,C)080–20
CSPH*3612A**	1.00	1.02	58MV(B,C)080–20
CAP**3621A**	0.97	1.00	58MV(B,C)100–20
CNPH*3017A**	0.97	1.01	58MV(B,C)100–20
CNPH*3617A**	0.97	1.01	58MV(B,C)100–20
CNPV*3621A**	0.97	1.00	58MV(B,C)100–20
CSPH*3012A**	0.97	1.01	58MV(B,C)100–20
CSPH*3612A**	0.99	1.02	58MV(B,C)100–20
CNPH*3017A**	0.98	1.00	58MV(B,C)120–20
CNPH*3617A**	0.98	1.00	58MV(B,C)120–20
CSPH*3012A**	0.99	1.01	58MV(B,C)120–20
CSPH*3612A**	1.00	1.00	58MV(B,C)120–20
CNPH*3017A**	0.97	1.01	58MVB040–14
CNPH*3617A**	0.97	1.01	58MVB040–14
CSPH*3012A**	0.98	1.02	58MVB040–14
CSPH*3612A**	0.99	1.02	58MVB040–14
CAP**3017A**	0.98	1.02	58PH*070–16
CAP**3617A**	0.99	1.03	58PH*070–16
CNPH*3017A**	0.98	1.02	58PH*070–16
CNPH*3617A**	0.98	1.02	58PH*070–16
CNPV*3017A**	0.98	1.02	58PH*070–16
CNPV*3117A**	1.01	1.03	58PH*070–16
CNPV*3617A**	0.98	1.02	58PH*070–16
CNPV*3717A**	1.02	1.05	58PH*070–16
CSPH*3012A**	0.99	1.03	58PH*070–16
CSPH*3612A**	1.01	1.03	58PH*070–16
CAP**3621A**	0.99	1.02	58PH*090–16
CNPH*3017A**	0.99	1.01	58PH*090–16
CNPH*3617A**	0.99	1.01	58PH*090–16
CNPV*3621A**	0.99	1.01	58PH*090–16
CSPH*3012A**	0.99	1.01	58PH*090–16
CSPH*3612A**	1.01	1.01	58PH*090–16
CAP**3017A**	0.98	1.00	58VLR105–12
CAP**3617A**	0.99	1.01	58VLR105–12
CNPH*3017A**	0.99	1.03	58VLR105–12
CNPH*3617A**	0.99	1.03	58VLR105–12
CNPV*3017A**	0.99	1.03	58VLR105–12
CNPV*3117A**	1.01	1.03	58VLR105–12
CNPV*3617A**	0.99	1.03	58VLR105–12
CNPV*3717A**	1.01	1.01	58VLR105–12

COOLING INDOOR MODEL	CAPACITY	POWER	FURNACE MODEL
CSPH*3012A**	0.99	1.03	58VLR105–12
CSPH*3612A**	1.01	1.03	58VLR105–12
CAP**3017A**	0.97	1.00	58VMR105–12
CAP**3617A**	0.97	1.00	58VMR105–12
CNPH*3017A**	0.97	1.01	58VMR105–12
CNPH*3617A**	0.97	1.01	58VMR105–12
CNPV*3017A**	0.97	1.01	58VMR105–12
CNPV*3117A**	0.99	1.02	58VMR105–12
CNPV*3617A**	0.97	1.01	58VMR105–12
CNPV*3717A**	1.00	1.00	58VMR105–12
CSPH*3012A**	0.97	1.01	58VMR105–12
CSPH*3612A**	0.99	1.02	58VMR105–12
CAP**3017A**	0.98	1.00	OVLAAB036098
CAP**3617A**	0.98	1.00	OVLAAB036098
CNPH*3017A**	0.98	1.00	OVLAAB036098
CNPH*3117A**	1.00	1.00	OVLAAB036098
CNPH*3617A**	0.98	1.00	OVLAAB036098
CNPV*3017A**	0.98	1.00	OVLAAB036098
CNPV*3117A**	1.00	1.00	OVLAAB036098
CNPV*3617A**	0.98	1.00	OVLAAB036098
CNPV*3717A**	1.01	1.00	OVLAAB036098
CSPH*3012A**	0.98	1.02	OVLAAB036098
CSPH*3612A**	1.00	1.00	OVLAAB036098
CAP**3621A**	0.99	0.99	OVLAAB048112
CNPH*3017A**	0.99	1.01	OVLAAB048112
CNPH*3117A**	1.01	1.01	OVLAAB048112
CNPH*3617A**	0.99	1.01	OVLAAB048112
CNPV*3621A**	0.99	1.01	OVLAAB048112
CSPH*3012A**	0.99	1.02	OVLAAB048112
CSPH*3612A**	1.01	1.01	OVLAAB048112
CAP**3017A**	0.98	1.02	OVMAAB036098
CAP**3617A**	0.98	1.00	OVMAAB036098
CNPH*3017A**	0.98	1.02	OVMAAB036098
CNPH*3117A**	1.00	1.02	OVMAAB036098
CNPH*3617A**	0.98	1.02	OVMAAB036098
CNPV*3017A**	0.98	1.02	OVMAAB036098
CNPV*3117A**	1.00	1.02	OVMAAB036098
CNPV*3617A**	0.98	1.02	OVMAAB036098
CNPV*3717A**	1.01	1.01	OVMAAB036098
CSPH*3012A**	0.98	1.02	OVMAAB036098
CSPH*3612A**	1.00	1.02	OVMAAB036098
CAP**3017A**	0.98	0.98	OVMAAB042112
CAP**3617A**	0.99	0.99	OVMAAB042112
CNPH*3017A**	0.98	1.00	OVMAAB042112
CNPH*3117A**	1.01	0.99	OVMAAB042112
CNPH*3617A**	0.98	1.00	OVMAAB042112
CNPV*3017A**	0.98	1.00	OVMAAB042112
CNPV*3117A**	1.01	0.99	OVMAAB042112
CNPV*3617A**	0.98	1.00	OVMAAB042112
CNPV*3717A**	1.01	0.97	OVMAAB042112
CSPH*3012A**	0.99	1.01	OVMAAB042112
CSPH*3612A**	1.00	0.98	OVMAAB042112

See notes on pg. 37

DETAILED COOLING CAPACITIES# CONTINUED

Evaporator Air		CONDENSER ENTERING AIR TEMPERATURES deg F																	
		75			85			95			105			115			125		
CFM	EWB	Capacity MBtuh†		Total System KW**	Capacity MBtuh†		Total System KW**	Capacity MBtuh†		Total System KW**	Capacity MBtuh†		Total System KW**	Capacity MBtuh†		Total System KW**	Capacity MBtuh†		Total System KW**
		Total	Sens‡		Total	Sens‡		Total	Sens‡		Total	Sens‡		Total	Sens‡		Total	Sens‡	
25HNB536A* Outdoor Section With FX4DNF037 Indoor Section																			
1050	72	41.83	22.07	2.26	39.98	21.35	2.52	37.99	20.58	2.81	35.88	19.78	3.13	33.60	18.93	3.50	31.14	18.02	3.92
	67	38.11	27.12	2.24	36.41	26.38	2.50	34.57	25.60	2.78	32.60	24.78	3.10	30.49	23.91	3.47	28.21	22.97	3.90
	63††	35.42	26.13	2.23	33.81	25.39	2.48	32.09	24.60	2.77	30.24	23.77	3.09	28.25	22.88	3.46	26.10	21.93	3.89
	62	34.72	32.04	2.23	33.16	31.27	2.48	31.49	30.44	2.76	29.72	29.53	3.08	27.90	27.90	3.46	26.19	26.19	3.89
	57	33.41	33.41	2.22	32.19	32.19	2.48	30.86	30.86	2.76	29.42	29.42	3.08	27.86	27.86	3.46	26.15	26.15	3.89
1200	72	42.65	23.16	2.29	40.73	22.43	2.56	38.66	21.66	2.84	36.45	20.84	3.17	34.10	19.98	3.53	31.56	19.05	3.95
	67	38.90	28.89	2.27	37.11	28.13	2.53	35.20	27.34	2.82	33.16	26.50	3.14	30.97	25.60	3.51	28.62	24.65	3.93
	63††	36.18	27.78	2.26	34.50	27.02	2.52	32.71	26.22	2.80	30.78	25.37	3.12	28.72	24.46	3.49	26.51	23.49	3.92
	62	35.54	34.38	2.26	33.93	33.54	2.51	32.25	32.04	2.80	30.63	30.63	3.12	28.96	28.96	3.49	27.15	27.15	3.92
	57	34.85	34.85	2.25	33.54	33.54	2.51	32.12	32.12	2.79	30.58	30.58	3.12	28.92	28.92	3.49	27.11	27.11	3.92
1350	72	43.28	24.20	2.33	41.29	23.46	2.59	39.15	22.68	2.88	36.89	21.85	3.20	34.47	20.98	3.57	31.86	20.04	3.99
	67	39.49	30.57	2.30	37.64	29.81	2.56	35.67	29.00	2.85	33.57	28.14	3.17	31.33	27.22	3.54	28.93	26.23	3.96
	63††	36.76	29.35	2.29	35.02	28.58	2.55	33.17	27.76	2.83	31.19	26.89	3.15	29.08	25.95	3.52	26.82	24.94	3.95
	62	36.25	36.44	2.29	34.71	34.71	2.55	33.20	33.20	2.83	31.59	31.59	3.15	29.84	29.84	3.53	27.93	24.94	3.95
	57	36.05	36.05	2.29	34.66	34.66	2.55	33.16	33.16	2.83	31.55	31.55	3.15	29.80	29.80	3.53	27.90	24.94	3.95

COOLING INDOOR MODEL	CAPACITY	POWER	FURNACE MODEL
*FX4DN(B,F)037	1.00	1.00	
FB4CNF036	0.96	1.04	
FB4CNF042	1.00	1.04	
FE4AN(B,F)003	0.97	1.01	
FE4ANB006	1.01	0.97	
FE4ANF002	0.96	1.04	
FF1ENP036	0.96	1.09	
FF1ENP037	0.97	1.08	
FV4CN(B,F)003	0.97	1.01	
FV4CNB006	1.01	0.97	
FV4CNF002	0.96	1.04	
FX4DN(B,F)043	1.00	1.04	
FY5BNF036	0.97	1.06	
FY5BNF042	0.99	1.07	
CAP**3614A**	0.95	1.08	
CAP**3617A**	0.96	1.09	
CAP**3619A**	0.96	1.09	
CAP**3621A**	0.96	1.09	
CAP**4221A**	0.97	1.10	
CAP**4224A**	0.97	1.10	
CNPF*3618A**	0.96	1.09	
CNPH*3617A**	0.96	1.09	
CNPH*4221A**	0.97	1.10	
CNPV*3617A**	0.96	1.09	
CNPV*3621A**	0.96	1.09	
CNPV*3717A**	1.00	1.09	
CNPV*4217A**	0.98	1.11	
CNPV*4221A**	0.97	1.10	
CNPV*4324A**	1.00	1.09	
CSPH*3612A**	0.98	1.12	
CSPH*4212A**	0.99	1.12	
CAP**3614A**	0.95	1.03	58CV(A,X)070–12
CNPH*3617A**	0.95	1.03	58CV(A,X)070–12
CNPH*4221A**	0.96	1.04	58CV(A,X)070–12
CSPH*3612A**	0.98	1.02	58CV(A,X)070–12
CSPH*4212A**	0.98	1.02	58CV(A,X)070–12
CAP**3617A**	0.95	0.99	58CV(A,X)090–16
CNPH*3617A**	0.95	0.99	58CV(A,X)090–16
CNPH*4221A**	0.97	1.01	58CV(A,X)090–16

COOLING INDOOR MODEL	CAPACITY	POWER	FURNACE MODEL
CNPV*3617A**	0.95	0.99	58CV(A,X)090–16
CNPV*3717A**	0.99	0.99	58CV(A,X)090–16
CNPV*4217A**	0.97	1.01	58CV(A,X)090–16
CSPH*3612A**	0.98	1.02	58CV(A,X)090–16
CSPH*4212A**	0.98	1.02	58CV(A,X)090–16
CAP**3621A**	0.96	1.00	58CV(A,X)110–20
CAP**4221A**	0.97	1.01	58CV(A,X)110–20
CNPH*3617A**	0.95	0.99	58CV(A,X)110–20
CNPH*4221A**	0.97	1.01	58CV(A,X)110–20
CNPV*3621A**	0.95	0.99	58CV(A,X)110–20
CNPV*4221A**	0.97	1.01	58CV(A,X)110–20
CSPH*3612A**	0.98	1.02	58CV(A,X)110–20
CSPH*4212A**	0.99	1.03	58CV(A,X)110–20
CAP**4224A**	0.97	1.01	58CV(A,X)135–22
CNPH*3617A**	0.95	0.99	58CV(A,X)135–22
CNPH*4221A**	0.97	1.01	58CV(A,X)135–22
CNPV*4324A**	0.99	0.99	58CV(A,X)135–22
CSPH*3612A**	0.98	1.02	58CV(A,X)135–22
CSPH*4212A**	0.99	1.03	58CV(A,X)135–22
CAP**4224A**	0.97	0.97	58CV(A,X)155–22
CNPH*3617A**	0.96	1.00	58CV(A,X)155–22
CNPH*4221A**	0.97	1.01	58CV(A,X)155–22
CNPV*4324A**	1.00	1.00	58CV(A,X)155–22
CSPH*3612A**	0.98	1.02	58CV(A,X)155–22
CSPH*4212A**	0.99	0.99	58CV(A,X)155–22
CAP**3619A**	0.95	1.08	58HDV040––12
CNPH*3617A**	0.95	1.08	58HDV040––12
CNPH*4221A**	0.96	1.09	58HDV040––12
CNPH*4321A**	0.99	1.07	58HDV040––12
CSPH*3612A**	0.97	1.10	58HDV040––12
CSPH*4212A**	0.98	1.06	58HDV040––12
CAP**3619A**	0.96	1.04	58HDV060––12
CNPH*3617A**	0.95	1.04	58HDV060––12
CNPH*4221A**	0.97	1.05	58HDV060––12
CNPH*4321A**	1.00	1.04	58HDV060––12
CSPH*3612A**	0.98	1.07	58HDV060––12
CSPH*4212A**	0.99	1.07	58HDV060––12
CNPH*3617A**	0.97	1.05	58HDV080––20
CNPH*4221A**	0.98	1.07	58HDV080––20

COOLING INDOOR MODEL	CAPACITY	POWER	FURNACE MODEL
CNPH*4321A**	1.02	1.06	58HDV080––20
CSPH*3612A**	0.99	1.04	58HDV080––20
CSPH*4212A**	1.01	1.05	58HDV080––20
CAP**4224A**	0.98	1.02	58HDV100––20
CNPH*3617A**	0.96	1.04	58HDV100––20
CNPH*4221A**	0.98	1.02	58HDV100––20
CNPH*4321A**	1.01	1.01	58HDV100––20
CNPV*4324A**	1.01	1.01	58HDV100––20
CSPH*3612A**	0.99	1.03	58HDV100––20
CSPH*4212A**	0.99	1.04	58HDV100––20
CAP**3617A**	0.97	1.01	58MEB040–12
CNPH*3617A**	0.96	1.00	58MEB040–12
CNPH*4221A**	0.97	1.01	58MEB040–12
CNPV*3617A**	0.96	1.00	58MEB040–12
CNPV*3717A**	1.00	1.00	58MEB040–12
CNPV*4217A**	0.98	1.02	58MEB040–12
CSPH*3612A**	0.99	1.03	58MEB040–12
CSPH*4212A**	0.99	1.04	58MEB040–12
CAP**3617A**	0.97	1.01	58MEC060–12
CNPH*3617A**	0.96	1.04	58MEC060–12
CNPH*4221A**	0.97	1.01	58MEC060–12
CNPV*3617A**	0.96	1.04	58MEC060–12
CNPV*3717A**	1.01	1.05	58MEC060–12
CNPV*4217A**	0.98	1.02	58MEC060–12
CSPH*3612A**	0.99	1.03	58MEC060–12
CSPH*4212A**	0.99	1.04	58MEC060–12
CAP**3617A**	0.96	1.00	58MEC080–12
CNPH*3617A**	0.96	1.00	58MEC080–12
CNPH*4221A**	0.97	1.01	58MEC080–12
CNPV*3617A**	0.96	1.00	58MEC080–12
CNPV*3717A**	1.00	1.00	58MEC080–12
CNPV*4217A**	0.98	1.02	58MEC080–12
CSPH*3612A**	0.98	1.02	58MEC080–12
CSPH*4212A**	0.99	1.04	58MEC080–12
CAP**3617A**	0.97	1.01	58MEC080–16
CNPH*3617A**	0.96	1.04	58MEC080–16
CNPH*4221A**	0.97	1.01	58MEC080–16
CNPV*3617A**	0.96	1.04	58MEC080–16
CNPV*3717A**	1.00	1.04	58MEC080–16

DETAILED COOLING CAPACITIES# CONTINUED

25HNB536A* Outdoor Section With FX4DNF037 Indoor Section

COOLING INDOOR MODEL	CAPACITY	POWER	FURNACE MODEL
CNPV*4217A**	0.98	1.02	58MEC080–16
CSPH*3612A**	0.99	1.03	58MEC080–16
CSPH*4212A**	0.99	1.04	58MEC080–16
CAP**3621A**	0.97	1.01	58MEC100–20
CAP**4221A**	0.97	1.01	58MEC100–20
CNPH*3617A**	0.95	0.99	58MEC100–20
CNPH*4221A**	0.97	1.01	58MEC100–20
CNPV*3621A**	0.95	0.99	58MEC100–20
CNPV*4221A**	0.97	1.01	58MEC100–20
CSPH*3612A**	0.98	1.02	58MEC100–20
CSPH*4212A**	0.99	0.99	58MEC100–20
CAP**3617A**	0.96	1.00	58MV(B,C)060–14
CNPH*3617A**	0.96	1.04	58MV(B,C)060–14
CNPH*4221A**	0.97	1.01	58MV(B,C)060–14
CNPV*3617A**	0.96	1.04	58MV(B,C)060–14
CNPV*3717A**	1.00	1.04	58MV(B,C)060–14
CNPV*4217A**	0.98	1.02	58MV(B,C)060–14
CSPH*3612A**	0.98	1.02	58MV(B,C)060–14
CSPH*4212A**	0.99	1.03	58MV(B,C)060–14
CAP**3621A**	0.96	1.04	58MV(B,C)080–14
CAP**4221A**	0.97	1.01	58MV(B,C)080–14
CNPH*3617A**	0.95	1.04	58MV(B,C)080–14
CNPH*4221A**	0.97	1.05	58MV(B,C)080–14
CNPV*3621A**	0.95	1.04	58MV(B,C)080–14
CNPV*4221A**	0.97	1.05	58MV(B,C)080–14
CNPV*4324A**	0.99	1.04	58MV(B,C)080–14
CNPV*4821A**	0.98	1.02	58MV(B,C)080–14
CNPV*6024A**	0.99	1.04	58MV(B,C)080–14
CSPH*3612A**	0.98	1.02	58MV(B,C)080–14
CSPH*4212A**	0.98	1.02	58MV(B,C)080–14
CAP**3621A**	0.95	0.99	58MV(B,C)080–20
CAP**4221A**	0.97	1.01	58MV(B,C)080–20
CNPH*3617A**	0.95	1.04	58MV(B,C)080–20
CNPH*4221A**	0.97	1.01	58MV(B,C)080–20
CNPV*3621A**	0.95	1.04	58MV(B,C)080–20
CNPV*4221A**	0.97	1.01	58MV(B,C)080–20
CNPV*4324A**	0.99	0.99	58MV(B,C)080–20
CSPH*3612A**	0.98	1.02	58MV(B,C)080–20
CSPH*4212A**	0.98	1.02	58MV(B,C)080–20
CAP**3621A**	0.96	1.00	58MV(B,C)100–20
CAP**4221A**	0.97	1.01	58MV(B,C)100–20
CNPH*3617A**	0.95	1.04	58MV(B,C)100–20
CNPH*4221A**	0.97	1.01	58MV(B,C)100–20
CNPV*3621A**	0.96	1.04	58MV(B,C)100–20
CNPV*4221A**	0.97	1.01	58MV(B,C)100–20
CSPH*3612A**	0.98	1.02	58MV(B,C)100–20
CSPH*4212A**	0.99	1.03	58MV(B,C)100–20
CAP**4224A**	0.97	1.01	58MV(B,C)120–20
CNPH*3617A**	0.95	0.99	58MV(B,C)120–20
CNPH*4221A**	0.97	1.01	58MV(B,C)120–20
CNPV*4324A**	0.99	0.99	58MV(B,C)120–20
CSPH*3612A**	0.98	1.02	58MV(B,C)120–20
CSPH*4212A**	0.98	1.02	58MV(B,C)120–20
CAP**4224A**	0.96	1.00	58MVB040–14
CNPH*3617A**	0.95	1.03	58MVB040–14
CNPH*4221A**	0.96	1.04	58MVB040–14
CNPV*4324A**	0.99	1.03	58MVB040–14
CSPH*3612A**	0.97	1.01	58MVB040–14
CSPH*4212A**	0.98	1.02	58MVB040–14

COOLING INDOOR MODEL	CAPACITY	POWER	FURNACE MODEL
CAP**3614A**	0.95	1.08	58PH*045–08
CNPH*3617A**	0.95	1.06	58PH*045–08
CNPH*4221A**	0.96	1.07	58PH*045–08
CSPH*3612A**	0.98	1.06	58PH*045–08
CSPH*4212A**	0.98	1.07	58PH*045–08
CAP**3617A**	0.95	1.04	58PH*070–16
CNPH*3617A**	0.95	1.04	58PH*070–16
CNPH*4221A**	0.97	1.05	58PH*070–16
CNPV*3617A**	0.95	1.04	58PH*070–16
CNPV*3717A**	0.99	1.04	58PH*070–16
CNPV*4217A**	0.97	1.06	58PH*070–16
CSPH*3612A**	0.98	1.06	58PH*070–16
CSPH*4212A**	0.98	1.02	58PH*070–16
CAP**3621A**	0.97	1.01	58PH*090–16
CAP**4221A**	0.98	1.02	58PH*090–16
CNPH*3617A**	0.96	1.00	58PH*090–16
CNPH*4221A**	0.97	1.01	58PH*090–16
CNPV*3621A**	0.96	1.00	58PH*090–16
CNPV*4221A**	0.97	1.01	58PH*090–16
CSPH*3612A**	0.99	1.03	58PH*090–16
CSPH*4212A**	0.99	1.04	58PH*090–16
CAP**3621A**	0.97	1.01	58PH*110–20
CAP**4221A**	0.98	1.02	58PH*110–20
CNPH*3617A**	0.96	1.00	58PH*110–20
CNPH*4221A**	0.98	1.02	58PH*110–20
CNPV*3621A**	0.97	1.01	58PH*110–20
CNPV*4221A**	0.98	1.02	58PH*110–20
CSPH*3612A**	0.99	1.03	58PH*110–20
CSPH*4212A**	1.00	1.00	58PH*110–20
CAP**3617A**	0.95	1.05	OVLAAB036098
CNPH*3617A**	0.95	1.05	OVLAAB036098
CNPH*4221A**	0.96	1.06	OVLAAB036098
CNPH*4321A**	0.99	1.06	OVLAAB036098
CNPV*3617A**	0.95	1.05	OVLAAB036098
CNPV*3717A**	0.98	1.05	OVLAAB036098
CNPV*4217A**	0.97	1.05	OVLAAB036098
CSPH*3612A**	0.97	1.06	OVLAAB036098
CSPH*4212A**	0.98	1.04	OVLAAB036098
CAP**3621A**	0.96	1.04	OVLAAB048112
CAP**4221A**	0.97	1.04	OVLAAB048112
CNPH*3617A**	0.96	1.06	OVLAAB048112
CNPH*4221A**	0.97	1.06	OVLAAB048112
CNPH*4321A**	1.00	1.04	OVLAAB048112
CNPV*3621A**	0.96	1.06	OVLAAB048112
CNPV*4221A**	0.97	1.06	OVLAAB048112
CSPH*3612A**	0.98	1.05	OVLAAB048112
CSPH*4212A**	0.99	1.06	OVLAAB048112
CNPH*3617A**	0.98	1.06	OVLAAB060154
CNPH*4221A**	0.99	1.06	OVLAAB060154
CNPH*4321A**	1.02	1.05	OVLAAB060154
CSPH*3612A**	1.01	1.05	OVLAAB060154
CSPH*4212A**	1.01	1.05	OVLAAB060154
CAP**3617A**	0.95	1.06	OVMAAB036098
CNPH*3617A**	0.95	1.06	OVMAAB036098
CNPH*4221A**	0.96	1.06	OVMAAB036098
CNPH*4321A**	0.99	1.06	OVMAAB036098
CNPV*3617A**	0.95	1.06	OVMAAB036098
CNPV*3717A**	0.99	1.06	OVMAAB036098
CNPV*4217A**	0.97	1.06	OVMAAB036098

COOLING INDOOR MODEL	CAPACITY	POWER	FURNACE MODEL
CSPH*3612A**	0.97	1.06	OVMAAB036098
CSPH*4212A**	0.98	1.05	OVMAAB036098
CAP**3617A**	0.95	1.04	OVMAAB042112
CNPH*3617A**	0.95	1.04	OVMAAB042112
CNPH*4221A**	0.97	1.03	OVMAAB042112
CNPH*4321A**	0.99	1.04	OVMAAB042112
CNPV*3617A**	0.95	1.04	OVMAAB042112
CNPV*3717A**	0.99	1.04	OVMAAB042112
CNPV*4217A**	0.97	1.04	OVMAAB042112
CSPH*3612A**	0.98	1.04	OVMAAB042112
CSPH*4212A**	0.98	1.02	OVMAAB042112

See notes on pg. 37

DETAILED COOLING CAPACITIES# CONTINUED

Evaporator Air		CONDENSER ENTERING AIR TEMPERATURES deg F																	
		75			85			95			105			115			125		
CFM	EWB	Capacity MBtuh†		Total System KW**	Capacity MBtuh†		Total System KW**	Capacity MBtuh†		Total System KW**	Capacity MBtuh†		Total System KW**	Capacity MBtuh†		Total System KW**	Capacity MBtuh†		Total System KW**
		Total	Sens‡		Total	Sens‡		Total	Sens‡		Total	Sens‡		Total	Sens‡		Total	Sens‡	
25HNB542A* Outdoor Section With FX4DNF043 Indoor Section																			
1225	72	50.43	25.70	2.47	48.01	24.76	2.86	45.51	23.81	3.26	42.89	22.83	3.69	40.16	21.82	4.13	37.25	20.76	4.61
	67	45.65	31.32	2.59	43.47	30.39	2.96	41.22	29.44	3.33	38.86	28.47	3.73	36.38	27.46	4.15	33.74	26.40	4.62
	63††	42.23	30.12	2.67	40.23	29.20	3.01	38.16	28.26	3.36	35.97	27.30	3.74	33.68	26.29	4.16	31.23	25.22	4.61
	62	41.36	36.82	2.68	39.42	35.88	3.02	37.42	34.91	3.37	35.33	33.87	3.75	33.17	32.70	4.16	31.09	31.09	4.61
	57	39.50	39.50	2.72	38.01	38.01	3.04	36.44	36.44	3.38	34.77	34.77	3.75	32.98	32.98	4.16	31.05	31.05	4.61
1400	72	51.53	26.95	2.47	48.98	25.98	2.88	46.35	25.01	3.29	43.62	24.01	3.72	40.76	22.98	4.17	37.75	21.90	4.65
	67	46.66	33.31	2.60	44.38	32.35	2.98	42.00	31.37	3.36	39.54	30.39	3.76	36.95	29.35	4.19	34.21	28.25	4.66
	63††	43.19	31.97	2.69	41.08	31.02	3.04	38.90	30.06	3.40	36.62	29.07	3.78	34.22	28.03	4.20	31.69	26.94	4.66
	62	42.36	39.45	2.70	40.35	38.44	3.05	38.28	37.36	3.40	36.20	36.20	3.78	34.27	34.27	4.20	32.20	32.20	4.66
	57	41.23	41.23	2.72	39.62	39.62	3.06	37.93	37.93	3.41	36.14	36.14	3.78	34.22	34.22	4.20	32.16	32.16	4.66
1575	72	52.37	28.11	2.48	49.72	27.13	2.90	47.00	26.14	3.31	44.15	25.12	3.75	41.21	24.07	4.20	38.11	22.98	4.69
	67	47.45	35.19	2.62	45.05	34.20	3.00	42.59	33.23	3.39	40.05	32.20	3.80	37.37	31.13	4.23	34.58	30.00	4.70
	63††	43.93	33.72	2.71	41.73	32.75	3.07	39.46	31.77	3.43	37.10	30.75	3.82	34.64	29.68	4.24	32.04	28.54	4.70
	62	43.23	41.84	2.72	41.18	40.82	3.07	39.23	39.23	3.43	37.32	37.32	3.82	35.29	35.29	4.24	33.12	33.12	4.70
	57	42.69	42.69	2.73	40.98	40.98	3.08	39.18	39.18	3.44	37.28	37.28	3.82	35.25	35.25	4.24	33.08	33.08	4.70

COOLING INDOOR MODEL	CAPACITY	POWER	FURNACE MODEL
*FX4DN(B,F)043	1.00	1.00	
FB4CNF042	1.00	1.04	
FB4CNF048	1.00	1.00	
FE4AN(B,F)003	0.96	1.00	
FV4CN(B,F)003	0.96	1.00	
FX4DN(B,F)049	1.00	0.96	
FY5BNF042	1.00	1.04	
FY5BNF048	1.00	1.04	
CAP**4221A**	0.98	1.06	
CAP**4224A**	0.98	1.06	
CAP**4817A**	1.00	1.09	
CAP**4821A**	0.99	1.07	
CAP**4823A**	0.99	1.07	
CAP**4824A**	0.99	1.07	
CNPF*4818A**	0.99	1.07	
CNPH*4221A**	0.98	1.06	
CNPH*4821A**	1.00	1.09	
CNPV*4217A**	0.99	1.07	
CNPV*4221A**	0.98	1.06	
CNPV*4324A**	1.00	1.04	
CNPV*4821A**	1.00	1.09	
CNPV*4824A**	1.00	1.09	
CSPH*4212A**	1.00	1.09	
CSPH*4812A**	1.00	1.09	
CNPH*4221A**	0.96	1.05	58CV(A,X)070–12
CNPH*4821A**	0.98	1.02	58CV(A,X)070–12
CSPH*4212A**	0.99	1.03	58CV(A,X)070–12
CSPH*4812A**	0.99	1.03	58CV(A,X)070–12
CAP**4817A**	0.99	0.99	58CV(A,X)090–16
CNPH*4221A**	0.96	1.00	58CV(A,X)090–16
CNPH*4821A**	0.99	1.03	58CV(A,X)090–16
CNPV*4217A**	0.98	1.02	58CV(A,X)090–16
CSPH*4212A**	0.99	1.03	58CV(A,X)090–16
CSPH*4812A**	1.00	1.00	58CV(A,X)090–16
CAP**4221A**	0.96	1.00	58CV(A,X)110–20
CAP**4821A**	0.99	1.03	58CV(A,X)110–20
CNPH*4221A**	0.98	1.02	58CV(A,X)110–20
CNPH*4821A**	0.99	0.99	58CV(A,X)110–20
CNPV*4221A**	0.98	1.02	58CV(A,X)110–20

COOLING INDOOR MODEL	CAPACITY	POWER	FURNACE MODEL
CNPV*4324A**	1.00	1.00	58CV(A,X)110–20
CNPV*4821A**	0.99	0.99	58CV(A,X)110–20
CSPH*4212A**	0.99	1.03	58CV(A,X)110–20
CSPH*4812A**	1.00	1.00	58CV(A,X)110–20
CAP**4224A**	0.98	1.02	58CV(A,X)135–22
CAP**4824A**	0.99	0.99	58CV(A,X)135–22
CNPH*4221A**	0.98	1.02	58CV(A,X)135–22
CNPH*4821A**	0.99	0.99	58CV(A,X)135–22
CNPV*4324A**	1.00	0.96	58CV(A,X)135–22
CNPV*4824A**	0.99	0.99	58CV(A,X)135–22
CSPH*4212A**	1.00	1.00	58CV(A,X)135–22
CSPH*4812A**	1.00	1.00	58CV(A,X)135–22
CAP**4224A**	0.98	0.98	58CV(A,X)155–22
CAP**4824A**	0.99	0.99	58CV(A,X)155–22
CNPH*4221A**	0.98	1.02	58CV(A,X)155–22
CNPH*4821A**	0.99	0.99	58CV(A,X)155–22
CNPV*4324A**	1.00	0.96	58CV(A,X)155–22
CNPV*4824A**	0.99	0.99	58CV(A,X)155–22
CSPH*4212A**	0.99	0.99	58CV(A,X)155–22
CSPH*4812A**	1.00	1.00	58CV(A,X)155–22
CAP**4823A**	1.00	1.02	58HDV080––20
CNPH*4221A**	0.98	1.02	58HDV080––20
CNPH*4321A**	1.00	1.00	58HDV080––20
CNPH*4821A**	1.00	1.02	58HDV080––20
CSPH*4212A**	1.00	1.04	58HDV080––20
CSPH*4812A**	1.00	1.02	58HDV080––20
CAP**4224A**	0.98	1.02	58HDV100––20
CNPH*4221A**	0.98	1.02	58HDV100––20
CNPH*4321A**	1.00	1.00	58HDV100––20
CNPH*4821A**	1.00	1.00	58HDV100––20
CNPV*4324A**	1.00	1.00	58HDV100––20
CNPV*4824A**	1.00	1.00	58HDV100––20
CSPH*4212A**	1.00	1.02	58HDV100––20
CSPH*4812A**	1.00	1.00	58HDV100––20
CAP**4817A**	1.00	1.04	58MEB040–12
CNPH*4221A**	0.98	1.02	58MEB040–12
CNPH*4821A**	1.00	1.04	58MEB040–12
CNPV*4217A**	0.99	1.03	58MEB040–12
CSPH*4212A**	1.00	1.04	58MEB040–12

COOLING INDOOR MODEL	CAPACITY	POWER	FURNACE MODEL
CSPH*4812A**	1.00	1.00	58MEB040–12
CAP**4817A**	1.00	1.04	58MEC060–12
CNPH*4221A**	0.98	1.02	58MEC060–12
CNPH*4821A**	1.00	1.04	58MEC060–12
CNPV*4217A**	0.99	1.03	58MEC060–12
CSPH*4212A**	1.00	1.04	58MEC060–12
CSPH*4812A**	1.00	1.04	58MEC060–12
CAP**4817A**	1.00	1.04	58MEC080–12
CNPH*4221A**	0.98	1.02	58MEC080–12
CNPH*4821A**	1.00	1.04	58MEC080–12
CNPV*4217A**	0.99	1.03	58MEC080–12
CSPH*4212A**	1.00	1.04	58MEC080–12
CSPH*4812A**	1.00	1.00	58MEC080–12
CAP**4817A**	0.99	1.03	58MEC080–16
CNPH*4221A**	0.98	1.02	58MEC080–16
CNPH*4821A**	0.99	1.03	58MEC080–16
CNPV*4217A**	0.98	1.02	58MEC080–16
CSPH*4212A**	0.99	1.03	58MEC080–16
CSPH*4812A**	1.00	1.00	58MEC080–16
CAP**4221A**	0.98	1.02	58MEC100–20
CAP**4821A**	0.99	0.99	58MEC100–20
CNPH*4221A**	0.98	1.02	58MEC100–20
CNPH*4821A**	1.00	1.00	58MEC100–20
CNPV*4221A**	0.98	1.02	58MEC100–20
CNPV*4324A**	1.00	1.00	58MEC100–20
CNPV*4821A**	1.00	1.00	58MEC100–20
CSPH*4212A**	1.00	1.00	58MEC100–20
CSPH*4812A**	1.00	1.00	58MEC100–20
CAP**4224A**	0.98	0.98	58MEC120–20
CAP**4824A**	1.00	1.00	58MEC120–20
CNPH*4221A**	0.98	1.02	58MEC120–20
CNPH*4821A**	1.00	1.00	58MEC120–20
CNPV*4324A**	1.00	0.96	58MEC120–20
CNPV*4824A**	1.00	1.00	58MEC120–20
CSPH*4212A**	1.00	1.00	58MEC120–20
CSPH*4812A**	1.00	1.00	58MEC120–20
CAP**4817A**	1.00	1.04	58MV(B,C)060–14
CNPH*4221A**	0.98	1.02	58MV(B,C)060–14
CNPH*4821A**	0.99	1.03	58MV(B,C)060–14

DETAILED COOLING CAPACITIES# CONTINUED

25HNB542A* Outdoor Section With FX4DNF043 Indoor Section

COOLING INDOOR MODEL	CAPACITY	POWER	FURNACE MODEL
CNPV*4217A**	0.99	1.03	58MV(B,C)060–14
CSPH*4212A**	1.00	1.04	58MV(B,C)060–14
CSPH*4812A**	1.00	1.00	58MV(B,C)060–14
CAP**4221A**	0.96	1.05	58MV(B,C)080–14
CAP**4821A**	0.98	1.02	58MV(B,C)080–14
CNPH*4221A**	0.96	1.05	58MV(B,C)080–14
CNPH*4821A**	0.99	1.03	58MV(B,C)080–14
CNPV*4221A**	0.96	1.05	58MV(B,C)080–14
CNPV*4821A**	0.99	1.03	58MV(B,C)080–14
CSPH*4212A**	0.99	1.03	58MV(B,C)080–14
CSPH*4812A**	0.99	1.03	58MV(B,C)080–14
CAP**4221A**	0.96	1.00	58MV(B,C)080–20
CAP**4821A**	0.99	1.03	58MV(B,C)080–20
CNPH*4221A**	0.96	1.00	58MV(B,C)080–20
CNPH*4821A**	0.99	1.03	58MV(B,C)080–20
CNPV*4221A**	0.96	1.05	58MV(B,C)080–20
CNPV*4324A**	1.00	1.00	58MV(B,C)080–20
CNPV*4821A**	0.99	1.03	58MV(B,C)080–20
CSPH*4212A**	0.99	1.03	58MV(B,C)080–20
CSPH*4812A**	0.99	1.03	58MV(B,C)080–20
CAP**4221A**	0.96	1.00	58MV(B,C)100–20
CAP**4821A**	0.98	1.02	58MV(B,C)100–20
CNPH*4221A**	0.96	1.00	58MV(B,C)100–20
CNPH*4821A**	0.98	1.02	58MV(B,C)100–20
CNPV*4221A**	0.96	1.00	58MV(B,C)100–20
CNPV*4324A**	1.00	1.00	58MV(B,C)100–20
CNPV*4821A**	0.98	1.02	58MV(B,C)100–20
CSPH*4212A**	0.99	1.03	58MV(B,C)100–20
CSPH*4812A**	0.99	1.03	58MV(B,C)100–20
CAP**4224A**	0.96	1.00	58MV(B,C)120–20
CAP**4824A**	0.99	1.03	58MV(B,C)120–20
CNPH*4221A**	0.96	1.00	58MV(B,C)120–20
CNPH*4821A**	0.99	0.99	58MV(B,C)120–20
CNPV*4324A**	1.00	1.00	58MV(B,C)120–20
CNPV*4824A**	0.99	0.99	58MV(B,C)120–20
CSPH*4212A**	0.99	1.03	58MV(B,C)120–20
CSPH*4812A**	1.00	1.00	58MV(B,C)120–20
CAP**4224A**	0.96	1.00	58MVB040–14
CAP**4824A**	0.98	1.02	58MVB040–14
CNPH*4221A**	0.96	1.05	58MVB040–14
CNPH*4821A**	0.98	1.02	58MVB040–14
CNPV*4324A**	1.00	1.00	58MVB040–14
CNPV*4824A**	0.98	1.02	58MVB040–14
CSPH*4212A**	0.99	1.03	58MVB040–14
CSPH*4812A**	0.99	1.03	58MVB040–14
CAP**4817A**	0.99	1.03	58PH*070–16
CNPH*4221A**	0.96	1.05	58PH*070–16
CNPH*4821A**	0.99	1.03	58PH*070–16
CNPV*4217A**	0.98	1.06	58PH*070–16
CSPH*4212A**	0.99	1.07	58PH*070–16
CSPH*4812A**	1.00	1.04	58PH*070–16
CAP**4221A**	0.98	1.02	58PH*090–16
CAP**4821A**	0.99	0.99	58PH*090–16
CNPH*4221A**	0.98	1.02	58PH*090–16
CNPH*4821A**	1.00	1.00	58PH*090–16
CNPV*4221A**	0.98	1.02	58PH*090–16
CNPV*4821A**	1.00	1.00	58PH*090–16
CSPH*4212A**	1.00	1.00	58PH*090–16
CSPH*4812A**	1.00	1.00	58PH*090–16

COOLING INDOOR MODEL	CAPACITY	POWER	FURNACE MODEL
CAP**4221A**	0.98	1.02	58PH*110–20
CAP**4821A**	0.99	0.99	58PH*110–20
CNPH*4221A**	0.98	1.02	58PH*110–20
CNPH*4821A**	1.00	1.00	58PH*110–20
CNPV*4221A**	0.98	1.02	58PH*110–20
CNPV*4324A**	1.00	0.96	58PH*110–20
CNPV*4821A**	1.00	1.00	58PH*110–20
CSPH*4212A**	1.00	1.00	58PH*110–20
CSPH*4812A**	1.00	1.00	58PH*110–20
CAP**4224A**	0.98	1.02	58PH*135–20
CAP**4824A**	0.99	0.99	58PH*135–20
CNPH*4221A**	0.98	1.02	58PH*135–20
CNPH*4821A**	1.00	1.00	58PH*135–20
CNPV*4324A**	1.00	1.00	58PH*135–20
CNPV*4824A**	1.00	1.00	58PH*135–20
CSPH*4212A**	1.00	1.00	58PH*135–20
CSPH*4812A**	1.00	1.00	58PH*135–20
CAP**4221A**	0.98	1.04	OVLAAB048112
CAP**4821A**	0.99	1.06	OVLAAB048112
CNPH*4221A**	0.98	1.06	OVLAAB048112
CNPH*4321A**	1.00	1.04	OVLAAB048112
CNPH*4821A**	0.99	1.03	OVLAAB048112
CNPV*4221A**	0.98	1.06	OVLAAB048112
CNPV*4821A**	0.99	1.03	OVLAAB048112
CSPH*4212A**	1.00	1.07	OVLAAB048112
CSPH*4812A**	1.00	1.04	OVLAAB048112
CNPH*4221A**	0.99	1.03	OVLAAB060154
CNPH*4321A**	1.00	1.00	OVLAAB060154
CNPH*4821A**	1.00	1.02	OVLAAB060154
CSPH*4212A**	1.00	1.02	OVLAAB060154
CSPH*4812A**	1.00	1.02	OVLAAB060154
CAP**4817A**	0.99	1.03	OVMAAB042112
CNPH*4221A**	0.96	1.03	OVMAAB042112
CNPH*4321A**	1.00	1.02	OVMAAB042112
CNPH*4821A**	0.99	1.03	OVMAAB042112
CNPV*4217A**	0.98	1.04	OVMAAB042112
CSPH*4212A**	0.99	1.03	OVMAAB042112
CSPH*4812A**	0.99	1.03	OVMAAB042112

See notes on pg. 37

DETAILED COOLING CAPACITIES# CONTINUED

Evaporator Air		CONDENSER ENTERING AIR TEMPERATURES deg F																	
		75			85			95			105			115			125		
CFM	EWB	Capacity MBtuh†		Total System KW**	Capacity MBtuh†		Total System KW**	Capacity MBtuh†		Total System KW**	Capacity MBtuh†		Total System KW**	Capacity MBtuh†		Total System KW**	Capacity MBtuh†		Total System KW**
		Total	Sens‡		Total	Sens‡		Total	Sens‡		Total	Sens‡		Total	Sens‡		Total	Sens‡	
25HNB548A* Outdoor Section With FX4DNF049 Indoor Section																			
1400	72	57.26	29.51	2.89	54.23	28.34	3.33	51.16	27.19	3.76	48.02	26.02	4.20	44.73	24.81	4.66	41.29	23.57	5.18
	67	52.18	36.28	2.93	49.48	35.14	3.34	46.73	33.99	3.75	43.90	32.83	4.18	40.93	31.62	4.64	37.80	30.36	5.15
	63††	48.48	34.97	2.95	46.01	33.84	3.34	43.48	32.71	3.74	40.88	31.55	4.16	38.14	30.36	4.61	35.25	29.10	5.13
	62	47.52	42.88	2.95	45.12	41.72	3.34	42.69	40.54	3.74	40.19	39.27	4.15	37.70	37.70	4.61	35.35	35.35	5.13
	57	45.66	45.66	2.96	43.79	43.79	3.35	41.86	41.86	3.73	39.82	39.82	4.15	37.65	37.65	4.61	35.30	35.30	5.13
1600	72	58.35	30.94	2.92	55.18	29.75	3.37	51.96	28.57	3.80	48.68	27.37	4.25	45.27	26.15	4.72	41.70	24.88	5.23
	67	53.25	38.62	2.97	50.38	37.44	3.39	47.50	36.26	3.80	44.54	35.07	4.23	41.45	33.83	4.69	38.22	32.53	5.20
	63††	49.51	37.15	2.99	46.89	35.98	3.39	44.25	34.83	3.79	41.52	33.64	4.21	38.69	32.41	4.67	35.70	31.12	5.18
	62	48.61	45.99	3.00	46.11	44.72	3.39	43.64	43.39	3.79	41.34	41.34	4.21	39.01	39.01	4.67	36.50	36.50	5.19
	57	47.59	47.59	3.00	45.57	45.57	3.39	43.48	43.48	3.79	41.28	41.28	4.21	38.96	38.96	4.67	36.46	36.46	5.19
1800	72	59.17	32.29	2.96	55.88	31.08	3.41	52.54	29.88	3.85	49.16	28.67	4.30	45.65	27.43	4.77	41.98	26.15	5.28
	67	54.02	40.84	3.01	51.05	39.64	3.43	48.06	38.43	3.85	45.00	37.20	4.28	41.84	35.93	4.74	38.52	34.58	5.25
	63††	50.28	39.22	3.03	47.57	38.03	3.44	44.82	36.83	3.84	42.01	35.62	4.26	39.10	34.35	4.72	36.04	33.00	5.23
	62	49.55	48.76	3.04	47.11	47.11	3.44	44.87	44.87	3.84	42.54	42.54	4.27	40.07	40.07	4.73	37.40	37.40	5.25
	57	49.21	49.21	3.04	47.04	47.04	3.44	44.81	44.81	3.84	42.49	42.49	4.27	40.03	40.03	4.73	37.36	37.36	5.25

COOLING INDOOR MODEL	CAPACITY	POWER	FURNACE MODEL
*FX4DN(B,F)049	1.00	1.00	
FB4CNF048	0.98	1.06	
FB4CNF060	1.00	1.04	
FE4AN(B,F)005	0.99	0.99	
FV4CN(B,F)005	0.99	0.99	
FX4DN(B,F)061	1.01	1.01	
FY5BNB060	1.00	1.09	
FY5BNF048	1.00	1.04	
CAP**4817A**	0.97	1.05	
CAP**4821A**	0.98	1.09	
CAP**4823A**	0.98	1.09	
CAP**4824A**	0.98	1.09	
CAP**6021A**	0.99	1.08	
CAP**6024A**	0.99	1.08	
CAP**6025A**	0.99	1.08	
CNPF*4818A**	0.96	1.07	
CNPH*4821A**	0.98	1.06	
CNPH*6024A**	0.99	1.08	
CNPH*6124A**	1.00	1.09	
CNPV*4821A**	0.98	1.06	
CNPV*4824A**	0.98	1.06	
CNPV*6024A**	0.99	1.08	
CNPV*6124A**	1.01	1.10	
CSPH*4812A**	0.99	1.08	
CSPH*6012A**	1.00	1.09	
CAP**4817A**	0.97	1.05	58CV(A,X)090–16
CNPH*4821A**	0.97	1.01	58CV(A,X)090–16
CNPH*6024A**	0.98	1.02	58CV(A,X)090–16
CNPH*6124A**	0.99	1.03	58CV(A,X)090–16
CSPH*4812A**	0.97	1.01	58CV(A,X)090–16
CSPH*6012A**	0.99	1.03	58CV(A,X)090–16
CAP**4821A**	0.96	1.04	58CV(A,X)110–20
CAP**6021A**	0.98	1.02	58CV(A,X)110–20
CNPH*4821A**	0.97	1.01	58CV(A,X)110–20
CNPH*6024A**	0.98	1.02	58CV(A,X)110–20
CNPH*6124A**	0.99	1.03	58CV(A,X)110–20
CNPV*4821A**	0.97	1.01	58CV(A,X)110–20
CNPV*6124A**	1.00	1.00	58CV(A,X)110–20
CSPH*4812A**	0.97	1.01	58CV(A,X)110–20

COOLING INDOOR MODEL	CAPACITY	POWER	FURNACE MODEL
CSPH*6012A**	0.99	1.03	58CV(A,X)110–20
CAP**4824A**	0.97	1.01	58CV(A,X)135–22
CAP**6024A**	0.99	1.03	58CV(A,X)135–22
CNPH*4821A**	0.97	1.01	58CV(A,X)135–22
CNPH*6024A**	0.99	1.03	58CV(A,X)135–22
CNPH*6124A**	0.99	1.03	58CV(A,X)135–22
CNPV*4824A**	0.97	1.01	58CV(A,X)135–22
CNPV*6024A**	0.99	1.03	58CV(A,X)135–22
CNPV*6124A**	1.00	1.00	58CV(A,X)135–22
CSPH*4812A**	0.98	1.02	58CV(A,X)135–22
CSPH*6012A**	0.99	0.99	58CV(A,X)135–22
CAP**4824A**	0.97	1.01	58CV(A,X)155–22
CAP**6024A**	0.99	0.99	58CV(A,X)155–22
CNPH*4821A**	0.97	1.01	58CV(A,X)155–22
CNPH*6024A**	0.99	0.99	58CV(A,X)155–22
CNPH*6124A**	0.99	0.99	58CV(A,X)155–22
CNPV*4824A**	0.97	1.01	58CV(A,X)155–22
CNPV*6024A**	0.99	0.99	58CV(A,X)155–22
CNPV*6124A**	1.00	1.00	58CV(A,X)155–22
CSPH*4812A**	0.98	1.02	58CV(A,X)155–22
CSPH*6012A**	0.99	0.99	58CV(A,X)155–22
CAP**4823A**	0.97	1.05	58HDV080––20
CNPH*4821A**	0.97	1.05	58HDV080––20
CNPH*6024A**	0.99	1.08	58HDV080––20
CNPH*6124A**	0.99	1.03	58HDV080––20
CSPH*4812A**	0.98	1.06	58HDV080––20
CSPH*6012A**	1.00	1.04	58HDV080––20
CAP**6025A**	0.99	1.03	58HDV100––20
CNPH*4821A**	0.97	1.05	58HDV100––20
CNPH*6024A**	0.99	1.03	58HDV100––20
CNPH*6124A**	0.99	1.03	58HDV100––20
CNPV*4824A**	0.97	1.05	58HDV100––20
CNPV*6024A**	0.99	1.03	58HDV100––20
CNPV*6124A**	1.00	1.04	58HDV100––20
CSPH*4812A**	0.98	1.06	58HDV100––20
CSPH*6012A**	0.99	1.03	58HDV100––20
CAP**4817A**	0.97	1.05	58MEC080–16
CNPH*4821A**	0.97	1.05	58MEC080–16
CNPH*6024A**	0.99	1.03	58MEC080–16

COOLING INDOOR MODEL	CAPACITY	POWER	FURNACE MODEL
CNPH*6124A**	0.99	1.03	58MEC080–16
CSPH*4812A**	0.98	1.06	58MEC080–16
CSPH*6012A**	0.99	1.03	58MEC080–16
CAP**4821A**	0.97	1.01	58MEC100–20
CAP**6021A**	0.99	1.03	58MEC100–20
CNPH*4821A**	0.97	1.01	58MEC100–20
CNPH*6024A**	0.99	1.03	58MEC100–20
CNPH*6124A**	0.99	1.03	58MEC100–20
CNPV*4821A**	0.97	1.01	58MEC100–20
CSPH*4812A**	0.98	1.02	58MEC100–20
CSPH*6012A**	1.00	1.04	58MEC100–20
CAP**4824A**	0.97	1.01	58MEC120–20
CAP**6024A**	0.99	1.03	58MEC120–20
CNPH*4821A**	0.98	1.02	58MEC120–20
CNPH*6024A**	0.99	1.03	58MEC120–20
CNPH*6124A**	1.00	1.00	58MEC120–20
CNPV*4824A**	0.98	1.02	58MEC120–20
CNPV*6024A**	0.99	1.03	58MEC120–20
CNPV*6124A**	1.01	1.01	58MEC120–20
CNPV*6124A**	1.01	1.01	58MEC120–20
CSPH*4812A**	0.98	1.02	58MEC120–20
CSPH*6012A**	1.00	1.00	58MEC120–20
CAP**4821A**	0.96	1.04	58MV(B,C)080–20
CAP**6021A**	0.98	1.02	58MV(B,C)080–20
CNPH*4821A**	0.96	1.04	58MV(B,C)080–20
CNPH*6024A**	0.98	1.02	58MV(B,C)080–20
CNPH*6124A**	0.98	1.02	58MV(B,C)080–20
CNPV*4821A**	0.96	1.04	58MV(B,C)080–20
CSPH*4812A**	0.97	1.05	58MV(B,C)080–20
CSPH*6012A**	0.98	1.02	58MV(B,C)080–20
CAP**4821A**	0.96	1.04	58MV(B,C)100–20
CAP**6021A**	0.98	1.02	58MV(B,C)100–20
CNPH*4821A**	0.97	1.05	58MV(B,C)100–20
CNPH*6024A**	0.98	1.02	58MV(B,C)100–20
CNPH*6124A**	0.99	1.03	58MV(B,C)100–20
CNPV*4821A**	0.97	1.05	58MV(B,C)100–20
CNPV*6124A**	1.00	1.04	58MV(B,C)100–20
CNPV*6124A**	1.00	1.04	58MV(B,C)100–20
CSPH*4812A**	0.97	1.05	58MV(B,C)100–20

DETAILED COOLING CAPACITIES# CONTINUED

25HNB548A* Outdoor Section With FX4DNF049 Indoor Section

COOLING INDOOR MODEL	CAPACITY	POWER	FURNACE MODEL
CSPH*6012A**	0.99	1.03	58MV(B,C)100–20
CAP**4824A**	0.96	1.04	58MV(B,C)120–20
CAP**6024A**	0.98	1.02	58MV(B,C)120–20
CNPH*4821A**	0.97	1.01	58MV(B,C)120–20
CNPH*6024A**	0.98	1.02	58MV(B,C)120–20
CNPH*6124A**	0.99	1.03	58MV(B,C)120–20
CNPV*4824A**	0.97	1.01	58MV(B,C)120–20
CNPV*6024A**	0.98	1.02	58MV(B,C)120–20
CNPV*6124A**	0.99	1.03	58MV(B,C)120–20
CNPV*6124A**	0.99	1.03	58MV(B,C)120–20
CSPH*4812A**	0.97	1.01	58MV(B,C)120–20
CSPH*6012A**	0.99	1.03	58MV(B,C)120–20
CAP**4821A**	0.97	1.05	58PH*090–16
CAP**6021A**	0.99	1.03	58PH*090–16
CNPH*4821A**	0.97	1.01	58PH*090–16
CNPH*6024A**	0.99	1.03	58PH*090–16
CNPH*6124A**	0.99	1.03	58PH*090–16
CNPV*4821A**	0.97	1.01	58PH*090–16
CSPH*4812A**	0.98	1.02	58PH*090–16
CSPH*6012A**	1.00	1.04	58PH*090–16
CAP**4821A**	0.97	1.01	58PH*110–20
CAP**6021A**	0.99	1.03	58PH*110–20
CNPH*4821A**	0.97	1.01	58PH*110–20
CNPH*6024A**	0.99	0.99	58PH*110–20
CNPH*6124A**	0.99	0.99	58PH*110–20
CNPV*4821A**	0.97	1.01	58PH*110–20
CSPH*4812A**	0.98	1.02	58PH*110–20
CSPH*6012A**	1.00	1.00	58PH*110–20
CAP**4824A**	0.97	1.01	58PH*135–20
CAP**6024A**	0.99	1.03	58PH*135–20
CNPH*4821A**	0.97	1.01	58PH*135–20
CNPH*6024A**	0.99	1.03	58PH*135–20
CNPH*6124A**	0.99	1.03	58PH*135–20
CNPV*4824A**	0.97	1.01	58PH*135–20
CNPV*6024A**	0.99	1.03	58PH*135–20
CNPV*6124A**	1.00	1.00	58PH*135–20
CSPH*4812A**	0.98	1.02	58PH*135–20
CSPH*6012A**	1.00	1.04	58PH*135–20
CAP**4821A**	0.96	1.07	OVLAAB048112
CAP**6021A**	0.98	1.06	OVLAAB048112
CNPH*4821A**	0.97	1.08	OVLAAB048112
CNPH*6024A**	0.98	1.06	OVLAAB048112
CNPH*6124A**	0.99	1.08	OVLAAB048112
CNPV*4821A**	0.97	1.08	OVLAAB048112
CSPH*4812A**	0.97	1.07	OVLAAB048112
CSPH*6012A**	0.99	1.08	OVLAAB048112
CNPH*4821A**	0.99	1.08	OVLAAB060154
CNPH*6024A**	1.00	1.07	OVLAAB060154
CNPH*6124A**	1.01	1.08	OVLAAB060154
CSPH*4812A**	0.99	1.08	OVLAAB060154
CSPH*6012A**	1.01	1.08	OVLAAB060154

See notes on pg. 37

DETAILED COOLING CAPACITIES# CONTINUED

Evaporator Air		CONDENSER ENTERING AIR TEMPERATURES deg F																	
		75			85			95			105			115			125		
CFM	EWB	Capacity MBtuh†		Total System KW**	Capacity MBtuh†		Total System KW**	Capacity MBtuh†		Total System KW**	Capacity MBtuh†		Total System KW**	Capacity MBtuh†		Total System KW**	Capacity MBtuh†		Total System KW**
		Total	Sens‡		Total	Sens‡		Total	Sens‡		Total	Sens‡		Total	Sens‡		Total	Sens‡	
25HNB560A* Outdoor Section With FX4DNF061 Indoor Section																			
1750	72	70.38	35.96	3.88	66.99	34.68	4.27	63.41	33.37	4.71	59.63	31.99	5.21	55.59	30.54	5.78	51.30	29.02	6.41
	67	64.30	44.51	3.81	61.25	43.24	4.20	58.00	41.92	4.64	54.57	40.55	5.14	50.90	39.09	5.71	46.99	37.54	6.36
	63††	59.89	42.93	3.76	57.06	41.67	4.15	54.07	40.35	4.59	50.90	38.98	5.09	47.50	37.53	5.66	43.87	35.99	6.32
	62	58.73	52.83	3.75	56.00	51.53	4.14	53.11	50.14	4.58	50.09	48.59	5.08	47.13	47.13	5.66	44.16	44.16	6.32
	57	56.76	56.76	3.73	54.61	54.61	4.12	52.30	52.30	4.57	49.79	49.79	5.08	47.07	47.07	5.66	44.10	44.10	6.32
2000	72	71.60	37.71	3.96	68.07	36.42	4.35	64.32	35.07	4.79	60.39	33.67	5.29	56.21	32.20	5.85	51.76	30.66	6.49
	67	65.47	47.38	3.89	62.28	46.09	4.28	58.90	44.75	4.72	55.31	43.33	5.22	51.52	41.84	5.79	47.47	40.25	6.43
	63††	61.05	45.61	3.83	58.09	44.32	4.23	54.96	42.98	4.67	51.65	41.57	5.17	48.14	40.08	5.74	44.38	38.48	6.39
	62	60.01	56.64	3.83	57.18	55.19	4.22	54.33	54.33	4.66	51.62	51.62	5.17	48.70	48.70	5.75	45.53	45.53	6.41
	57	59.08	59.08	3.82	56.74	56.74	4.21	54.25	54.25	4.66	51.55	51.55	5.17	48.64	48.64	5.75	45.47	45.47	6.41
2250	72	72.51	39.37	4.04	68.83	38.06	4.43	64.98	36.70	4.87	60.94	35.28	5.37	56.63	33.79	5.93	52.08	32.24	6.56
	67	66.36	50.14	3.96	63.04	48.81	4.36	59.53	47.43	4.80	55.86	45.99	5.29	51.96	44.45	5.86	47.83	42.79	6.50
	63††	61.91	48.17	3.91	58.84	46.84	4.30	55.61	45.48	4.74	52.21	44.03	5.24	48.59	42.48	5.81	44.76	40.82	6.46
	62	61.10	61.10	3.90	58.57	58.57	4.30	55.91	55.91	4.75	53.05	53.05	5.25	49.97	49.97	5.83	46.62	46.62	6.49
	57	60.97	60.97	3.90	58.49	58.49	4.30	55.85	55.85	4.75	52.99	52.99	5.25	49.91	49.91	5.83	46.57	46.57	6.49

COOLING INDOOR MODEL	CAPACITY	POWER	FURNACE MODEL
*FX4DN(B,F)061	1.00	1.00	
FB4CNF060	0.97	1.06	
FE4ANB006	1.00	1.00	
FV4CNB006	1.00	1.00	
FY5BNB060	0.98	1.07	
CAP**6021A**	0.97	1.06	
CAP**6024A**	0.97	1.06	
CAP**6025A**	0.97	1.06	
CNPH*6024A**	0.97	1.06	
CNPH*6124A**	0.98	1.07	
CNPV*6024A**	0.97	1.06	
CNPV*6124A**	0.99	1.08	
CSPH*6012A**	0.98	1.07	
CAP**6021A**	0.97	1.06	58CV(A,X)110–20
CNPH*6024A**	0.97	1.06	58CV(A,X)110–20
CNPH*6124A**	0.98	1.07	58CV(A,X)110–20
CSPH*6012A**	0.98	1.07	58CV(A,X)110–20
CAP**6024A**	0.97	1.01	58CV(A,X)135–22
CNPH*6024A**	0.97	1.01	58CV(A,X)135–22
CNPH*6124A**	0.98	1.02	58CV(A,X)135–22
CNPV*6024A**	0.97	1.01	58CV(A,X)135–22
CNPV*6124A**	0.99	1.03	58CV(A,X)135–22
CSPH*6012A**	0.98	1.02	58CV(A,X)135–22

COOLING INDOOR MODEL	CAPACITY	POWER	FURNACE MODEL
CAP**6024A**	0.98	1.02	58CV(A,X)155–22
CNPH*6024A**	0.98	1.02	58CV(A,X)155–22
CNPH*6124A**	0.98	1.02	58CV(A,X)155–22
CNPV*6024A**	0.98	1.02	58CV(A,X)155–22
CNPV*6124A**	0.99	1.03	58CV(A,X)155–22
CSPH*6012A**	0.98	1.02	58CV(A,X)155–22
CNPH*6024A**	0.97	1.09	58HDV080––20
CNPH*6124A**	0.98	1.07	58HDV080––20
CSPH*6012A**	0.98	1.07	58HDV080––20
CAP**6025A**	0.97	1.06	58HDV100––20
CNPH*6024A**	0.97	1.06	58HDV100––20
CNPH*6124A**	0.98	1.07	58HDV100––20
CNPV*6024A**	0.97	1.06	58HDV100––20
CNPV*6124A**	0.99	1.08	58HDV100––20
CSPH*6012A**	0.98	1.07	58HDV100––20
CNPH*6024A**	0.97	1.05	58MEC080–16
CSPH*6012A**	0.97	1.06	58MEC080–16
CAP**6021A**	0.97	1.01	58MEC100–20
CNPH*6024A**	0.97	1.01	58MEC100–20
CNPH*6124A**	0.97	1.01	58MEC100–20
CSPH*6012A**	0.98	1.02	58MEC100–20
CAP**6024A**	0.97	1.01	58MEC120–20
CNPH*6024A**	0.97	1.01	58MEC120–20

COOLING INDOOR MODEL	CAPACITY	POWER	FURNACE MODEL
CNPH*6124A**	0.98	1.02	58MEC120–20
CNPV*6024A**	0.97	1.01	58MEC120–20
CNPV*6124A**	0.99	1.03	58MEC120–20
CSPH*6012A**	0.98	1.02	58MEC120–20
CNPV*6124A**	0.98	1.07	58MV(B,C)120–20
CSPH*6012A**	0.97	1.06	58MV(B,C)120–20
CAP**6021A**	0.97	1.01	58PH*110–20
CNPH*6024A**	0.97	1.01	58PH*110–20
CNPH*6124A**	0.98	1.02	58PH*110–20
CSPH*6012A**	0.98	1.02	58PH*110–20
CAP**6024A**	0.97	1.01	58PH*135–20
CNPH*6024A**	0.97	1.01	58PH*135–20
CNPH*6124A**	0.97	1.01	58PH*135–20
CNPV*6024A**	0.97	1.01	58PH*135–20
CNPV*6124A**	0.99	1.03	58PH*135–20
CSPH*6012A**	0.98	1.02	58PH*135–20
CAP**6024A**	0.97	1.01	OVLAAB060154
CAP**6025A**	0.97	1.01	OVLAAB060154
CNPH*6024A**	0.97	1.01	OVLAAB060154
CNPH*6124A**	0.98	1.02	OVLAAB060154
CNPV*6024A**	0.97	1.01	OVLAAB060154
CNPV*6124A**	0.99	1.03	OVLAAB060154
CSPH*6012A**	0.98	1.02	OVLAAB060154

* Tested combination.
† Total and sensible capacities are net capacities. Blower motor heat has been subtracted.
‡ Sensible capacities shown are based on 80°F (27°C) entering air at the indoor coil. For sensible capacities at other than 80°F (27°C), deduct 835 Btuh (245 kW) per 1000 CFM (480 L/S) of indoor coil air for each degree below 80°F (27°C), or add 835 Btuh (245 kW) per 1000 CFM (480 L/S) of indoor coil air per degree above 80°F (27°C).
# Detailed cooling capacities are based on indoor and outdoor unit at the same elevation per AHRI standard 210/240–2008. If additional tubing length and/or indoor unit is located above outdoor unit, a slight variation in capacity may occur.
** System kw is total of indoor and outdoor unit kilowatts.
†† At TVA rating indoor condition (75°F edb/63°F ewb). All other indoor air temperatures are at 80°F edb.
NOTE: When the required data falls between the published data, interpolation may be performed. Extrapolation is not an acceptable practice.
EWB — Entering Wet Bulb

HEAT PUMP HEATING PERFORMANCE

INDOOR AIR		OUTDOOR COIL ENTERING AIR TEMPERATURES deg F																							
		–3			7			17			27			37			47			57			67		
EDB	CFM	Capacity MBtuh		Total System KW†	Capacity MBtuh		Total System KW†	Capacity MBtuh		Total System KW†	Capacity MBtuh		Total System KW†	Capacity MBtuh		Total System KW†	Capacity MBtuh		Total System KW†	Capacity MBtuh		Total System KW†	Capacity MBtuh		Total System KW†
		Total	Integ*		Total	Integ*		Total	Integ*		Total	Integ*		Total	Integ*		Total	Integ*		Total	Integ*		Total	Integ*	
25HNB518A**30 Outdoor Section With FX4DNF019 Indoor Section																									
65	525	5.05	4.65	1.02	7.22	6.64	1.07	9.60	8.75	1.12	12.33	10.95	1.18	14.89	13.55	1.24	17.78	17.78	1.32	20.93	20.93	1.41	23.74	23.74	1.48
	600	5.14	4.72	1.02	7.33	6.74	1.07	9.74	8.88	1.11	12.47	11.08	1.17	15.09	13.73	1.22	18.04	18.04	1.29	21.07	21.07	1.35	23.71	23.71	1.42
	675	5.21	4.79	1.02	7.43	6.83	1.07	9.87	9.00	1.11	12.59	11.18	1.16	15.25	13.88	1.20	18.25	18.25	1.27	21.02	21.02	1.31	23.53	23.53	1.37
70	525	4.75	4.37	1.07	6.92	6.36	1.12	9.28	8.46	1.18	12.07	10.72	1.24	14.61	13.29	1.31	17.44	17.44	1.38	20.55	20.55	1.48	23.44	23.44	1.55
	600	4.84	4.45	1.07	7.03	6.46	1.12	9.42	8.59	1.17	12.23	10.86	1.23	14.80	13.47	1.28	17.70	17.70	1.35	20.80	20.80	1.42	23.47	23.47	1.49
	675	4.91	4.52	1.07	7.13	6.55	1.12	9.55	8.70	1.16	12.35	10.97	1.21	14.96	13.61	1.26	17.91	17.91	1.33	20.85	20.85	1.39	23.35	23.35	1.45
75	525	4.43	4.07	1.11	6.59	6.06	1.17	8.94	8.15	1.23	11.78	10.46	1.30	14.32	13.03	1.37	17.10	17.10	1.45	20.16	20.16	1.55	23.13	23.13	1.63
	600	4.51	4.15	1.12	6.71	6.16	1.17	9.09	8.28	1.22	11.95	10.61	1.29	14.51	13.20	1.34	17.35	17.35	1.42	20.47	20.47	1.50	23.19	23.19	1.57
	675	4.58	4.22	1.12	6.80	6.25	1.17	9.21	8.40	1.22	12.08	10.73	1.27	14.67	13.35	1.33	17.56	17.56	1.39	20.60	20.60	1.46	23.14	23.14	1.52

HEATING INDOOR MODEL	CAPACITY	POWER	FURNACE MODEL
*FX4DNF019	1.00	1.00	
FB4CNF018	0.99	1.03	
FB4CNF024	0.99	1.03	
FE4ANF002	0.98	1.00	
FF1ENP018	1.02	1.12	
FF1ENP019	0.99	1.03	
FF1ENP024	1.02	1.11	
FF1ENP025	0.99	1.00	
FV4BNF002	0.98	1.00	
FV4CNF002	0.98	1.00	
FX4CNF018	0.99	1.03	
FX4CNF024	0.99	1.02	
FX4DNF025	1.00	1.00	
FY4ANF018	1.02	1.12	
FY4ANF024	1.02	1.13	
FY5BNF018	1.01	1.08	
FY5BNF024	1.01	1.07	
CAP**1814A**	1.02	1.13	
CAP**2414A**	1.02	1.10	
CAP**2417A**	1.02	1.10	
CNPF*2418A**	1.02	1.08	
CNPH*2417A**	1.02	1.09	
CNPV*1814A**	1.02	1.10	
CNPV*1917A**	1.02	1.08	
CNPV*2414A**	1.02	1.08	
CNPV*2417A**	1.02	1.08	
CSPH*2412A**	1.02	1.08	
CAP**2417A**	0.99	0.99	353BAV036060
CAP**1814A**	0.97	1.05	58CV(A,X)070–12
CAP**2414A**	0.98	1.03	58CV(A,X)070–12
CNPH*2417A**	0.98	1.02	58CV(A,X)070–12
CNPV*1814A**	0.98	1.04	58CV(A,X)070–12
CNPV*2414A**	0.98	1.02	58CV(A,X)070–12
CSPH*2412A**	0.98	1.03	58CV(A,X)070–12
CAP**2417A**	0.98	1.02	58CV(A,X)090–16
CNPH*2417A**	0.98	1.02	58CV(A,X)090–16
CNPV*1917A**	0.98	1.01	58CV(A,X)090–16
CNPV*2417A**	0.98	1.02	58CV(A,X)090–16
CSPH*2412A**	0.98	1.02	58CV(A,X)090–16
CNPH*2417A**	1.02	1.01	58HDV040––12
CSPH*2412A**	1.02	1.01	58HDV040––12
CNPH*2417A**	1.02	1.00	58HDV060––12
CSPH*2412A**	1.02	1.01	58HDV060––12
CAP**2417A**	1.00	0.97	58MEB040–12
CNPH*2417A**	1.00	0.98	58MEB040–12

HEATING INDOOR MODEL	CAPACITY	POWER	FURNACE MODEL
CNPV*1917A**	1.01	0.96	58MEB040–12
CNPV*2417A**	1.00	0.98	58MEB040–12
CSPH*2412A**	0.99	0.99	58MEB040–12
CNPH*2417A**	0.99	1.00	58MEC060–12
CNPV*1917A**	1.00	0.98	58MEC060–12
CNPV*2417A**	0.99	1.00	58MEC060–12
CSPH*2412A**	0.98	1.01	58MEC060–12
CAP**2417A**	0.98	1.03	58MV(B,C)060–14
CNPH*2417A**	0.98	1.03	58MV(B,C)060–14
CNPV*1917A**	0.98	1.01	58MV(B,C)060–14
CNPV*2417A**	0.98	1.03	58MV(B,C)060–14
CSPH*2412A**	0.98	1.03	58MV(B,C)060–14
CNPH*2417A**	0.98	1.02	58MV(B,C)080–14
CSPH*2412A**	0.98	1.03	58MV(B,C)080–14
CNPH*2417A**	0.98	1.03	58MVB040–14
CSPH*2412A**	0.98	1.03	58MVB040–14
CAP**1814A**	0.98	1.04	58PH*045–08
CAP**2414A**	0.99	1.01	58PH*045–08
CNPH*2417A**	0.99	1.01	58PH*045–08
CNPV*1814A**	0.99	1.03	58PH*045–08
CNPV*2414A**	0.99	1.01	58PH*045–08
CSPH*2412A**	0.99	1.02	58PH*045–08
CAP**2417A**	0.99	1.02	OVLAAB036098
CNPH*2417A**	1.00	1.02	OVLAAB036098
CNPV*1917A**	1.00	0.99	OVLAAB036098
CNPV*2417A**	1.00	1.02	OVLAAB036098
CSPH*2412A**	1.00	1.02	OVLAAB036098
CAP**2417A**	1.00	1.01	OVMAAB036098
CNPH*2417A**	1.01	1.01	OVMAAB036098
CNPV*1917A**	1.01	1.00	OVMAAB036098
CNPV*2417A**	1.01	1.01	OVMAAB036098
CSPH*2412A**	1.01	1.01	OVMAAB036098

See notes on pg. 49

HEAT PUMP HEATING PERFORMANCE CONTINUED

INDOOR AIR		OUTDOOR COIL ENTERING AIR TEMPERATURES deg F																							
		–3			7			17			27			37			47			57			67		
EDB	CFM	Capacity MBtuh		Total System KW†	Capacity MBtuh		Total System KW†	Capacity MBtuh		Total System KW†	Capacity MBtuh		Total System KW†	Capacity MBtuh		Total System KW†	Capacity MBtuh		Total System KW†	Capacity MBtuh		Total System KW†	Capacity MBtuh		Total System KW†
		Total	Integ*		Total	Integ*		Total	Integ*		Total	Integ*		Total	Integ*		Total	Integ*		Total	Integ*		Total	Integ*	
25HNB524A* Outdoor Section With FX4DNF025 Indoor Section																									
65	700	8.38	7.71	1.36	11.07	10.18	1.44	14.28	13.02	1.52	17.14	15.23	1.57	20.39	18.56	1.63	24.08	24.08	1.72	28.29	28.29	1.86	32.83	32.83	2.02
	800	8.52	7.83	1.36	11.24	10.33	1.44	14.45	13.17	1.50	17.34	15.40	1.54	20.64	18.79	1.60	24.41	24.41	1.68	28.68	28.68	1.81	32.90	32.90	1.94
	900	8.64	7.95	1.37	11.39	10.47	1.44	14.59	13.30	1.49	17.50	15.54	1.53	20.85	18.98	1.58	24.67	24.67	1.66	28.96	28.96	1.77	32.79	32.79	1.88
70	700	7.98	7.35	1.42	10.69	9.83	1.51	13.97	12.74	1.59	16.84	14.96	1.65	20.05	18.24	1.71	23.68	23.68	1.81	27.81	27.81	1.95	32.46	32.46	2.13
	800	8.12	7.47	1.43	10.86	9.98	1.51	14.15	12.90	1.58	17.04	15.13	1.63	20.30	18.47	1.68	24.00	24.00	1.77	28.21	28.21	1.90	32.56	32.56	2.04
	900	8.24	7.58	1.43	11.00	10.11	1.51	14.30	13.04	1.57	17.21	15.28	1.61	20.50	18.66	1.66	24.26	24.26	1.74	28.53	28.53	1.87	32.53	32.53	1.98
75	700	7.57	6.97	1.49	10.29	9.46	1.59	13.23	12.06	1.66	16.55	14.70	1.73	19.70	17.93	1.80	23.28	23.28	1.90	27.36	27.36	2.04	31.99	31.99	2.24
	800	7.71	7.09	1.50	10.46	9.61	1.58	13.44	12.26	1.65	16.74	14.87	1.71	19.94	18.15	1.77	23.59	23.59	1.86	27.76	27.76	1.99	32.27	32.27	2.15
	900	7.82	7.19	1.50	10.60	9.74	1.58	13.66	12.45	1.64	16.91	15.02	1.70	20.15	18.33	1.75	23.85	23.85	1.83	28.05	28.05	1.96	32.25	32.25	2.08

HEATING INDOOR MODEL	CAPACITY	POWER	FURNACE MODEL
*FX4DNF025	1.00	1.00	
FB4CNF024	1.00	1.04	
FB4CNF030	1.00	1.00	
FE4AN(B,F)003	1.00	1.01	
FE4ANF002	1.00	1.01	
FF1ENP024	1.00	1.08	
FF1ENP025	1.00	1.03	
FF1ENP030	1.00	1.08	
FF1ENP031	1.00	1.03	
FF1ENP037	1.00	1.01	
FV4CN(B,F)003	1.00	1.01	
FV4CNF002	1.00	1.01	
FX4DN(B,F)031	1.00	1.00	
FY5BNF024	1.00	1.04	
FY5BNF030	1.00	1.04	
CAP**2414A**	1.00	1.07	
CAP**2417A**	1.00	1.07	
CAP**3014A**	1.00	1.06	
CAP**3017A**	1.00	1.06	
CNPF*2418A**	1.00	1.04	
CNPH*2417A**	1.00	1.04	
CNPH*3017A**	1.00	1.05	
CNPV*2414A**	1.00	1.04	
CNPV*2417A**	1.00	1.04	
CNPV*3014A**	1.00	1.05	
CNPV*3017A**	1.00	1.05	
CNPV*3117A**	1.00	1.01	
CSPH*2412A**	1.00	1.04	
CSPH*3012A**	1.00	1.05	
CAP**2414A**	1.00	1.05	58CV(A,X)070–12
CAP**3014A**	1.00	1.04	58CV(A,X)070–12
CNPH*2417A**	1.00	1.03	58CV(A,X)070–12
CNPH*3017A**	1.00	1.04	58CV(A,X)070–12
CNPV*2414A**	1.00	1.03	58CV(A,X)070–12
CNPV*3014A**	1.00	1.04	58CV(A,X)070–12
CSPH*2412A**	1.00	1.03	58CV(A,X)070–12
CSPH*3012A**	1.00	1.04	58CV(A,X)070–12
CAP**2417A**	1.00	1.04	58CV(A,X)090–16
CAP**3017A**	1.00	1.03	58CV(A,X)090–16
CNPH*2417A**	1.00	1.02	58CV(A,X)090–16
CNPH*3017A**	1.00	1.03	58CV(A,X)090–16
CNPV*2417A**	1.00	1.02	58CV(A,X)090–16
CNPV*3017A**	1.00	1.03	58CV(A,X)090–16
CNPV*3117A**	1.00	0.98	58CV(A,X)090–16

HEATING INDOOR MODEL	CAPACITY	POWER	FURNACE MODEL
CSPH*2412A**	1.00	1.02	58CV(A,X)090–16
CSPH*3012A**	1.00	1.03	58CV(A,X)090–16
CNPH*2417A**	1.00	1.02	58CV(A,X)110–20
CNPH*3017A**	1.00	1.03	58CV(A,X)110–20
CSPH*2412A**	1.00	1.03	58CV(A,X)110–20
CSPH*3012A**	1.00	1.03	58CV(A,X)110–20
CNPH*2417A**	1.00	1.02	58CV(A,X)135–22
CNPH*3017A**	1.00	1.03	58CV(A,X)135–22
CSPH*2412A**	1.00	1.03	58CV(A,X)135–22
CSPH*3012A**	1.00	1.03	58CV(A,X)135–22
CNPH*2417A**	1.00	1.02	58CV(A,X)155–22
CNPH*3017A**	1.00	1.02	58CV(A,X)155–22
CSPH*2412A**	1.00	1.02	58CV(A,X)155–22
CSPH*3012A**	1.00	1.03	58CV(A,X)155–22
CAP**3619A**	1.00	1.01	58HDV040––12
CNPH*2417A**	1.00	1.02	58HDV040––12
CNPH*3017A**	1.00	1.02	58HDV040––12
CNPH*3117A**	1.00	0.97	58HDV040––12
CSPH*2412A**	1.00	1.03	58HDV040––12
CSPH*3012A**	1.00	1.02	58HDV040––12
CAP**3619A**	1.00	0.99	58HDV060––12
CNPH*2417A**	1.00	1.01	58HDV060––12
CNPH*3017A**	1.00	1.00	58HDV060––12
CNPH*3117A**	1.00	0.95	58HDV060––12
CSPH*2412A**	1.00	1.02	58HDV060––12
CSPH*3012A**	1.00	1.01	58HDV060––12
CAP**2417A**	1.00	0.99	58MEB040–12
CAP**3017A**	1.00	0.98	58MEB040–12
CNPH*2417A**	1.00	0.99	58MEB040–12
CNPH*3017A**	1.00	0.98	58MEB040–12
CNPV*2417A**	1.00	0.99	58MEB040–12
CNPV*3017A**	1.00	0.98	58MEB040–12
CNPV*3117A**	1.00	0.93	58MEB040–12
CSPH*2412A**	1.00	1.00	58MEB040–12
CSPH*3012A**	1.00	0.99	58MEB040–12
CAP**2417A**	1.00	0.99	58MEC060–12
CAP**3017A**	1.00	0.98	58MEC060–12
CNPH*2417A**	1.00	0.99	58MEC060–12
CNPH*3017A**	1.00	0.98	58MEC060–12
CNPV*2417A**	1.00	0.99	58MEC060–12
CNPV*3017A**	1.00	0.98	58MEC060–12
CNPV*3117A**	1.00	0.93	58MEC060–12
CSPH*2412A**	1.00	0.99	58MEC060–12
CSPH*3012A**	1.00	0.98	58MEC060–12

HEATING INDOOR MODEL	CAPACITY	POWER	FURNACE MODEL
CAP**2417A**	1.00	1.01	58MEC080–12
CAP**3017A**	1.00	0.99	58MEC080–12
CNPH*2417A**	1.00	1.00	58MEC080–12
CNPH*3017A**	1.00	0.99	58MEC080–12
CNPV*2417A**	1.00	1.00	58MEC080–12
CNPV*3017A**	1.00	0.99	58MEC080–12
CNPV*3117A**	1.00	0.94	58MEC080–12
CSPH*2412A**	1.00	1.01	58MEC080–12
CSPH*3012A**	1.00	0.99	58MEC080–12
CAP**2417A**	1.00	1.02	58MV(B,C)060–14
CAP**3017A**	1.00	1.01	58MV(B,C)060–14
CNPH*2417A**	1.00	1.00	58MV(B,C)060–14
CNPH*3017A**	1.00	1.01	58MV(B,C)060–14
CNPV*2417A**	1.00	1.00	58MV(B,C)060–14
CNPV*3017A**	1.00	1.01	58MV(B,C)060–14
CNPV*3117A**	1.00	0.96	58MV(B,C)060–14
CSPH*2412A**	1.00	1.00	58MV(B,C)060–14
CSPH*3012A**	1.00	1.01	58MV(B,C)060–14
CNPH*2417A**	1.00	1.03	58MV(B,C)080–14
CNPH*3017A**	1.00	1.03	58MV(B,C)080–14
CSPH*2412A**	1.00	1.03	58MV(B,C)080–14
CSPH*3012A**	1.00	1.04	58MV(B,C)080–14
CNPH*2417A**	1.00	1.04	58MV(B,C)080–20
CNPH*3017A**	1.00	1.05	58MV(B,C)080–20
CSPH*2412A**	1.00	1.05	58MV(B,C)080–20
CSPH*3012A**	1.00	1.05	58MV(B,C)080–20
CNPH*2417A**	1.00	1.02	58MV(B,C)100–20
CNPH*3017A**	1.00	1.03	58MV(B,C)100–20
CSPH*2412A**	1.00	1.03	58MV(B,C)100–20
CSPH*3012A**	1.00	1.03	58MV(B,C)100–20
CNPH*2417A**	1.00	1.01	58MV(B,C)120–20
CNPH*3017A**	1.00	1.02	58MV(B,C)120–20
CSPH*2412A**	1.00	1.01	58MV(B,C)120–20
CSPH*3012A**	1.00	1.02	58MV(B,C)120–20
CNPH*2417A**	1.00	1.03	58MVB040–14
CNPH*3017A**	1.00	1.03	58MVB040–14
CSPH*2412A**	1.00	1.03	58MVB040–14
CSPH*3012A**	1.00	1.03	58MVB040–14
CAP**2414A**	1.00	1.03	58PH*045–08
CAP**3014A**	1.00	1.02	58PH*045–08
CNPH*2417A**	1.00	1.02	58PH*045–08
CNPH*3017A**	1.00	1.01	58PH*045–08
CNPV*2414A**	1.00	1.02	58PH*045–08
CNPV*3014A**	1.00	1.03	58PH*045–08

HEAT PUMP HEATING PERFORMANCE CONTINUED

25HNB524A* Outdoor Section With FX4DNF025 Indoor Section

HEATING INDOOR MODEL	CAPACITY	POWER	FURNACE MODEL
CSPH*2412A**	1.00	1.03	58PH*045–08
CSPH*3012A**	1.00	1.02	58PH*045–08
CAP**2417A**	1.00	1.04	OVLAAB036098
CAP**3017A**	1.00	1.03	OVLAAB036098
CNPH*2417A**	1.00	1.02	OVLAAB036098
CNPH*3017A**	1.00	1.03	OVLAAB036098
CNPH*3117A**	1.00	0.98	OVLAAB036098
CNPV*2417A**	1.00	1.02	OVLAAB036098
CNPV*3017A**	1.00	1.03	OVLAAB036098
CNPV*3117A**	1.00	0.98	OVLAAB036098
CSPH*2412A**	1.00	1.03	OVLAAB036098
CSPH*3012A**	1.00	1.01	OVLAAB036098
CAP**2417A**	1.00	1.04	OVMAAB036098
CAP**3017A**	1.00	1.03	OVMAAB036098
CNPH*2417A**	1.00	1.03	OVMAAB036098
CNPH*3017A**	1.00	1.03	OVMAAB036098
CNPH*3117A**	1.00	0.98	OVMAAB036098
CNPV*2417A**	1.00	1.03	OVMAAB036098
CNPV*3017A**	1.00	1.03	OVMAAB036098
CNPV*3117A**	1.00	0.98	OVMAAB036098
CSPH*2412A**	1.00	1.03	OVMAAB036098
CSPH*3012A**	1.00	1.02	OVMAAB036098
CAP**2417A**	1.00	1.04	OVMAAB042112
CAP**3017A**	1.00	1.03	OVMAAB042112
CNPH*2417A**	1.00	1.03	OVMAAB042112
CNPH*3017A**	1.00	1.03	OVMAAB042112
CNPH*3117A**	1.00	0.98	OVMAAB042112
CNPV*2417A**	1.00	1.03	OVMAAB042112
CNPV*3017A**	1.00	1.03	OVMAAB042112
CNPV*3117A**	1.00	0.98	OVMAAB042112
CSPH*2412A**	1.00	1.03	OVMAAB042112
CSPH*3012A**	1.00	1.02	OVMAAB042112

See notes on pg. 49

HEAT PUMP HEATING PERFORMANCE CONTINUED

INDOOR AIR		OUTDOOR COIL ENTERING AIR TEMPERATURES deg F																								
		–3			7			17			27			37			47			57			67		
EDB	CFM	Capacity MBtuh		Total System KW†	Capacity MBtuh		Total System KW†	Capacity MBtuh		Total System KW†	Capacity MBtuh		Total System KW†	Capacity MBtuh		Total System KW†	Capacity MBtuh		Total System KW†	Capacity MBtuh		Total System KW†	Capacity MBtuh		Total System KW†
		Total	Integ*		Total	Integ*		Total	Integ*		Total	Integ*		Total	Integ*		Total	Integ*		Total	Integ*		Total	Integ*	
25HNB530A**30 Outdoor Section With FX4DN(B,F)031 Indoor Section																										
65	875	9.11	8.38	1.73	12.59	11.57	1.80	16.31	14.87	1.87	20.37	18.09	1.95	25.34	23.06	2.06	29.70	29.70	2.16	34.52	34.52	2.29	39.87	39.87	2.43
	1000	9.31	8.57	1.74	12.83	11.79	1.80	16.60	15.13	1.86	20.71	18.40	1.93	25.67	23.36	2.03	30.10	30.10	2.12	35.02	35.02	2.24	40.46	40.46	2.35
	1125	9.45	8.69	1.75	13.00	11.95	1.81	16.82	15.34	1.86	21.01	18.66	1.93	25.93	23.59	2.02	30.43	30.43	2.10	35.43	35.43	2.20	40.83	40.83	2.30
70	875	8.48	7.80	1.80	11.97	11.00	1.87	15.72	14.33	1.95	19.76	17.55	2.03	24.87	22.63	2.16	29.21	29.21	2.26	33.97	33.97	2.39	39.25	39.25	2.53
	1000	8.67	7.97	1.81	12.22	11.23	1.88	16.01	14.60	1.94	20.11	17.86	2.02	25.22	22.95	2.13	29.60	29.60	2.22	34.46	34.46	2.34	39.87	39.87	2.46
	1125	8.84	8.13	1.82	12.42	11.41	1.89	16.24	14.81	1.95	20.39	18.11	2.01	25.49	23.20	2.11	29.93	29.93	2.20	34.86	34.86	2.30	40.27	40.27	2.40
75	875	7.80	7.18	1.87	11.32	10.40	1.95	15.09	13.76	2.03	19.13	16.99	2.12	23.72	21.59	2.23	28.72	28.72	2.37	33.42	33.42	2.50	38.67	38.67	2.64
	1000	7.99	7.35	1.88	11.55	10.62	1.95	15.37	14.02	2.03	19.48	17.30	2.11	24.70	22.48	2.23	29.11	29.11	2.33	33.90	33.90	2.44	39.24	39.24	2.57
	1125	8.15	7.50	1.90	11.77	10.81	1.96	15.61	14.24	2.03	19.77	17.56	2.10	25.00	22.75	2.21	29.44	29.44	2.30	34.29	34.29	2.40	39.68	39.68	2.51

HEATING INDOOR MODEL	CAPACITY	POWER	FURNACE MODEL
*FX4DN(B,F)031	1.00	1.00	
FB4CNF030	1.00	1.03	
FB4CNF036	1.00	1.03	
FE4AN(B,F)003	0.98	0.99	
FE4ANF002	0.99	1.01	
FF1ENP030	1.01	1.09	
FF1ENP031	0.99	1.02	
FF1ENP036	1.01	1.08	
FF1ENP037	1.01	1.03	
FV4CN(B,F)003	0.98	0.99	
FV4CNF002	0.99	1.01	
FX4DN(B,F)037	1.00	0.98	
FY5BNF030	1.01	1.03	
FY5BNF036	1.01	1.06	
CAP**3014A**	1.01	1.08	
CAP**3017A**	1.01	1.08	
CAP**3614A**	1.01	1.07	
CAP**3617A**	1.01	1.07	
CAP**3619A**	1.01	1.07	
CAP**3621A**	1.01	1.07	
CNPF*3618A**	1.01	1.08	
CNPH*3017A**	1.01	1.08	
CNPH*3617A**	1.01	1.08	
CNPV*3014A**	1.01	1.08	
CNPV*3017A**	1.01	1.08	
CNPV*3117A**	1.01	1.04	
CNPV*3617A**	1.01	1.08	
CNPV*3621A**	1.01	1.08	
CNPV*3717A**	1.01	1.02	
CSPH*3012A**	1.01	1.07	
CSPH*3612A**	1.01	1.05	
CAP**3014A**	0.98	1.03	58CV(A,X)070–12
CAP**3614A**	0.99	1.03	58CV(A,X)070–12
CNPH*3017A**	0.98	1.02	58CV(A,X)070–12
CNPH*3617A**	0.98	1.02	58CV(A,X)070–12
CNPV*3014A**	0.99	1.04	58CV(A,X)070–12
CSPH*3012A**	0.99	1.03	58CV(A,X)070–12
CSPH*3612A**	0.99	1.00	58CV(A,X)070–12
CAP**3017A**	0.98	1.02	58CV(A,X)090–16
CAP**3617A**	0.98	1.01	58CV(A,X)090–16
CNPH*3017A**	0.98	1.02	58CV(A,X)090–16
CNPH*3617A**	0.98	1.02	58CV(A,X)090–16
CNPV*3017A**	0.98	1.02	58CV(A,X)090–16
CNPV*3117A**	0.99	0.98	58CV(A,X)090–16

HEATING INDOOR MODEL	CAPACITY	POWER	FURNACE MODEL
CNPV*3617A**	0.98	1.02	58CV(A,X)090–16
CNPV*3717A**	0.99	0.97	58CV(A,X)090–16
CSPH*3012A**	0.98	1.02	58CV(A,X)090–16
CSPH*3612A**	0.99	0.99	58CV(A,X)090–16
CAP**3621A**	0.98	1.01	58CV(A,X)110–20
CNPH*3017A**	0.98	1.01	58CV(A,X)110–20
CNPH*3617A**	0.98	1.01	58CV(A,X)110–20
CNPV*3621A**	0.98	1.01	58CV(A,X)110–20
CSPH*3012A**	0.99	1.02	58CV(A,X)110–20
CSPH*3612A**	0.99	0.99	58CV(A,X)110–20
CNPH*3017A**	0.98	1.01	58CV(A,X)135–22
CNPH*3617A**	0.98	1.01	58CV(A,X)135–22
CSPH*3012A**	0.98	1.01	58CV(A,X)135–22
CSPH*3612A**	0.99	0.99	58CV(A,X)135–22
CNPH*3017A**	0.98	1.01	58CV(A,X)155–22
CNPH*3617A**	0.98	1.01	58CV(A,X)155–22
CSPH*3012A**	0.98	1.01	58CV(A,X)155–22
CSPH*3612A**	0.99	0.99	58CV(A,X)155–22
CAP**3619A**	1.00	1.04	58HDV040––12
CAP**3619A**	1.00	1.04	58HDV040––12
CNPH*3017A**	0.99	1.05	58HDV040––12
CNPH*3117A**	1.01	1.02	58HDV040––12
CNPH*3617A**	0.99	1.05	58HDV040––12
CSPH*3012A**	0.99	1.05	58HDV040––12
CSPH*3612A**	1.00	1.02	58HDV040––12
CAP**3619A**	1.00	1.03	58HDV060––12
CAP**3619A**	1.00	1.03	58HDV060––12
CNPH*3017A**	1.00	1.04	58HDV060––12
CNPH*3117A**	1.01	1.00	58HDV060––12
CNPH*3617A**	1.00	1.04	58HDV060––12
CSPH*3012A**	1.00	1.04	58HDV060––12
CSPH*3612A**	1.01	1.01	58HDV060––12
CAP**3017A**	0.99	1.00	58MEB040–12
CAP**3617A**	0.99	0.99	58MEB040–12
CNPH*3017A**	0.99	1.00	58MEB040–12
CNPH*3617A**	0.99	1.00	58MEB040–12
CNPV*3017A**	0.99	1.00	58MEB040–12
CNPV*3117A**	1.00	0.98	58MEB040–12
CNPV*3617A**	0.99	1.00	58MEB040–12
CNPV*3717A**	1.00	0.95	58MEB040–12
CSPH*3012A**	0.99	1.01	58MEB040–12
CSPH*3612A**	0.99	0.97	58MEB040–12
CAP**3017A**	0.99	1.00	58MEC060–12
CAP**3617A**	0.99	1.00	58MEC060–12

HEATING INDOOR MODEL	CAPACITY	POWER	FURNACE MODEL
CNPH*3017A**	0.99	1.01	58MEC060–12
CNPH*3617A**	0.99	1.01	58MEC060–12
CNPV*3017A**	0.99	1.01	58MEC060–12
CNPV*3117A**	1.00	0.97	58MEC060–12
CNPV*3617A**	0.99	1.01	58MEC060–12
CNPV*3717A**	1.01	0.96	58MEC060–12
CSPH*3012A**	0.99	1.01	58MEC060–12
CSPH*3612A**	1.00	0.98	58MEC060–12
CAP**3017A**	0.99	1.01	58MEC080–12
CAP**3617A**	0.99	1.00	58MEC080–12
CNPH*3017A**	0.99	1.01	58MEC080–12
CNPH*3617A**	0.99	1.01	58MEC080–12
CNPV*3017A**	0.99	1.01	58MEC080–12
CNPV*3117A**	1.00	0.98	58MEC080–12
CNPV*3617A**	0.99	1.01	58MEC080–12
CNPV*3717A**	1.00	0.96	58MEC080–12
CSPH*3012A**	0.99	1.01	58MEC080–12
CSPH*3612A**	0.99	0.98	58MEC080–12
CAP**3017A**	0.99	1.00	58MEC080–16
CAP**3617A**	0.99	0.99	58MEC080–16
CNPH*3017A**	0.99	1.00	58MEC080–16
CNPH*3617A**	0.99	1.00	58MEC080–16
CNPV*3017A**	0.99	1.00	58MEC080–16
CNPV*3117A**	1.01	0.98	58MEC080–16
CNPV*3617A**	0.99	1.00	58MEC080–16
CNPV*3717A**	1.01	0.96	58MEC080–16
CSPH*3012A**	0.99	1.01	58MEC080–16
CSPH*3612A**	1.01	0.98	58MEC080–16
CAP**3017A**	0.98	1.01	58MV(B,C)060–14
CAP**3617A**	0.99	1.01	58MV(B,C)060–14
CNPH*3017A**	0.99	1.01	58MV(B,C)060–14
CNPH*3617A**	0.99	1.01	58MV(B,C)060–14
CNPV*3017A**	0.99	1.01	58MV(B,C)060–14
CNPV*3117A**	0.99	0.98	58MV(B,C)060–14
CNPV*3617A**	0.99	1.01	58MV(B,C)060–14
CNPV*3717A**	1.00	0.97	58MV(B,C)060–14
CSPH*3012A**	0.99	1.01	58MV(B,C)060–14
CSPH*3612A**	0.99	0.99	58MV(B,C)060–14
CAP**3621A**	0.98	1.02	58MV(B,C)080–14
CNPH*3017A**	0.98	1.03	58MV(B,C)080–14
CNPH*3617A**	0.98	1.03	58MV(B,C)080–14
CNPV*3621A**	0.98	1.03	58MV(B,C)080–14
CSPH*3012A**	0.98	1.03	58MV(B,C)080–14
CSPH*3612A**	0.99	1.01	58MV(B,C)080–14

HEAT PUMP HEATING PERFORMANCE CONTINUED

INDOOR AIR		OUTDOOR COIL ENTERING AIR TEMPERATURES deg F																							
		–3			7			17			27			37			47			57			67		
EDB	CFM	Capacity MBtuh		Total System KW†	Capacity MBtuh		Total System KW†	Capacity MBtuh		Total System KW†	Capacity MBtuh		Total System KW†	Capacity MBtuh		Total System KW†	Capacity MBtuh		Total System KW†	Capacity MBtuh		Total System KW†	Capacity MBtuh		Total System KW†
		Total	Integ*		Total	Integ*		Total	Integ*		Total	Integ*		Total	Integ*		Total	Integ*		Total	Integ*		Total	Integ*	
25HNB536A* Outdoor Section With FX4DNF037 Indoor Section																									
65	1050	11.44	10.52	1.97	15.33	14.09	2.06	19.61	17.88	2.15	24.41	21.68	2.26	29.99	27.29	2.39	35.11	35.11	2.52	40.74	40.74	2.65	46.35	46.35	2.78
	1200	11.66	10.73	1.98	15.60	14.34	2.06	19.93	18.17	2.15	24.85	22.07	2.24	30.35	27.62	2.36	35.57	35.57	2.47	41.14	41.14	2.57	46.50	46.50	2.69
	1350	11.86	10.91	2.00	15.83	14.55	2.07	20.21	18.42	2.15	25.78	22.90	2.25	30.66	27.90	2.34	35.94	35.94	2.44	41.32	41.32	2.53	46.51	46.51	2.63
70	1050	10.73	9.87	2.07	14.64	13.45	2.16	18.94	17.26	2.25	23.71	21.05	2.36	29.52	26.86	2.51	34.56	34.56	2.63	40.20	40.20	2.78	45.76	45.76	2.91
	1200	10.95	10.08	2.08	14.91	13.70	2.16	19.26	17.56	2.25	24.10	21.41	2.35	29.87	27.19	2.47	35.00	35.00	2.59	40.60	40.60	2.70	45.95	45.95	2.82
	1350	11.15	10.26	2.09	15.15	13.92	2.17	19.53	17.81	2.25	24.44	21.70	2.34	30.17	27.46	2.45	35.37	35.37	2.56	40.83	40.83	2.65	46.01	46.01	2.76
75	1050	9.98	9.19	2.17	13.92	12.79	2.26	18.23	16.62	2.36	22.97	20.40	2.47	28.97	26.36	2.63	34.00	34.00	2.76	39.58	39.58	2.92	45.14	45.14	3.04
	1200	10.20	9.38	2.18	14.18	13.03	2.26	18.55	16.92	2.35	23.37	20.76	2.45	29.35	26.71	2.59	34.43	34.43	2.71	40.10	40.10	2.84	45.39	45.39	2.95
	1350	10.39	9.55	2.19	14.41	13.25	2.27	18.82	17.16	2.35	23.70	21.05	2.45	29.66	26.99	2.57	34.80	34.80	2.68	40.32	40.32	2.78	45.49	45.49	2.89

HEATING INDOOR MODEL	CAPACITY	POWER	FURNACE MODEL
*FX4DN(B,F)037	1.00	1.00	
FB4CNF036	1.00	1.06	
FB4CNF042	1.01	1.01	
FE4AN(B,F)003	0.98	1.02	
FE4ANB006	0.98	0.94	
FE4ANF002	0.99	1.04	
FF1ENP036	1.01	1.11	
FF1ENP037	1.01	1.10	
FV4BNF002	0.99	1.04	
FV4CN(B,F)003	0.98	1.02	
FV4CNB006	0.98	0.94	
FV4CNF002	0.99	1.04	
FX4DN(B,F)043	1.00	1.00	
FY5BNF036	1.01	1.07	
FY5BNF042	1.01	1.05	
CAP**3614A**	1.01	1.11	
CAP**3617A**	1.02	1.10	
CAP**3619A**	1.02	1.10	
CAP**3621A**	1.02	1.10	
CAP**4221A**	1.02	1.09	
CAP**4224A**	1.02	1.09	
CNPF*3618A**	1.02	1.10	
CNPH*3617A**	1.02	1.10	
CNPH*4221A**	1.02	1.08	
CNPV*3617A**	1.02	1.10	
CNPV*3621A**	1.02	1.10	
CNPV*3717A**	1.03	1.05	
CNPV*4217A**	1.02	1.08	
CNPV*4221A**	1.02	1.08	
CNPV*4324A**	1.03	1.05	
CSPH*3612A**	1.02	1.07	
CSPH*4212A**	1.03	1.07	
CAP**3614A**	0.98	1.07	58CV(A,X)070–12
CNPH*3617A**	0.98	1.07	58CV(A,X)070–12
CNPH*4221A**	0.99	1.05	58CV(A,X)070–12
CSPH*3612A**	0.99	1.03	58CV(A,X)070–12
CSPH*4212A**	0.99	1.03	58CV(A,X)070–12
CAP**3617A**	0.98	1.04	58CV(A,X)090–16
CNPH*3617A**	0.98	1.05	58CV(A,X)090–16
CNPH*4221A**	0.98	1.04	58CV(A,X)090–16
CNPV*3617A**	0.98	1.05	58CV(A,X)090–16
CNPV*3717A**	0.99	0.99	58CV(A,X)090–16
CNPV*4217A**	0.99	1.03	58CV(A,X)090–16
CSPH*3612A**	0.99	1.02	58CV(A,X)090–16

HEATING INDOOR MODEL	CAPACITY	POWER	FURNACE MODEL
CSPH*4212A**	0.99	1.01	58CV(A,X)090–16
CAP**3621A**	0.98	1.04	58CV(A,X)110–20
CAP**4221A**	0.98	1.03	58CV(A,X)110–20
CNPH*3617A**	0.98	1.05	58CV(A,X)110–20
CNPH*4221A**	0.98	1.03	58CV(A,X)110–20
CNPV*3621A**	0.98	1.05	58CV(A,X)110–20
CNPV*4221A**	0.98	1.03	58CV(A,X)110–20
CSPH*3612A**	0.99	1.01	58CV(A,X)110–20
CSPH*4212A**	0.99	1.00	58CV(A,X)110–20
CAP**4224A**	0.98	1.02	58CV(A,X)135–22
CNPH*3617A**	0.98	1.05	58CV(A,X)135–22
CNPH*4221A**	0.98	1.03	58CV(A,X)135–22
CNPV*4324A**	0.99	0.98	58CV(A,X)135–22
CSPH*3612A**	0.99	1.01	58CV(A,X)135–22
CSPH*4212A**	0.99	1.00	58CV(A,X)135–22
CAP**4224A**	0.98	1.01	58CV(A,X)155–22
CNPH*3617A**	0.98	1.04	58CV(A,X)155–22
CNPH*4221A**	0.98	1.02	58CV(A,X)155–22
CNPV*4324A**	0.99	0.97	58CV(A,X)155–22
CSPH*3612A**	0.98	1.00	58CV(A,X)155–22
CSPH*4212A**	0.99	1.00	58CV(A,X)155–22
CAP**3619A**	1.00	1.10	58HDV040––12
CNPH*3617A**	0.99	1.10	58HDV040––12
CNPH*4221A**	1.00	1.08	58HDV040––12
CNPH*4321A**	1.01	1.03	58HDV040––12
CSPH*3612A**	1.01	1.07	58HDV040––12
CSPH*4212A**	1.01	1.07	58HDV040––12
CAP**3619A**	1.00	1.08	58HDV060––12
CNPH*3617A**	0.99	1.08	58HDV060––12
CNPH*4221A**	1.00	1.06	58HDV060––12
CNPH*4321A**	1.01	1.01	58HDV060––12
CSPH*3612A**	1.01	1.05	58HDV060––12
CSPH*4212A**	1.01	1.04	58HDV060––12
CNPH*3617A**	1.00	1.05	58HDV080––20
CNPH*4221A**	1.01	1.04	58HDV080––20
CNPH*4321A**	1.01	0.98	58HDV080––20
CSPH*3612A**	1.01	1.02	58HDV080––20
CSPH*4212A**	1.01	1.01	58HDV080––20
CAP**4224A**	0.99	1.02	58HDV100––20
CNPH*3617A**	0.99	1.05	58HDV100––20
CNPH*4221A**	0.99	1.03	58HDV100––20
CNPH*4321A**	1.00	0.97	58HDV100––20
CNPV*4324A**	1.01	0.98	58HDV100––20
CSPH*3612A**	1.00	1.02	58HDV100––20

HEATING INDOOR MODEL	CAPACITY	POWER	FURNACE MODEL
CSPH*4212A**	1.00	1.00	58HDV100––20
CAP**3617A**	0.98	1.04	58MEB040–12
CNPH*3617A**	0.98	1.05	58MEB040–12
CNPH*4221A**	0.99	1.03	58MEB040–12
CNPV*3617A**	0.98	1.05	58MEB040–12
CNPV*3717A**	1.00	0.99	58MEB040–12
CNPV*4217A**	0.99	1.02	58MEB040–12
CSPH*3612A**	0.99	1.01	58MEB040–12
CSPH*4212A**	0.99	1.00	58MEB040–12
CAP**3617A**	0.99	1.04	58MEC060–12
CNPH*3617A**	0.98	1.05	58MEC060–12
CNPH*4221A**	0.99	1.03	58MEC060–12
CNPV*3617A**	0.98	1.05	58MEC060–12
CNPV*3717A**	1.01	0.99	58MEC060–12
CNPV*4217A**	0.99	1.02	58MEC060–12
CSPH*3612A**	0.99	1.01	58MEC060–12
CSPH*4212A**	1.00	1.01	58MEC060–12
CAP**3617A**	0.98	1.04	58MEC080–12
CNPH*3617A**	0.98	1.05	58MEC080–12
CNPH*4221A**	0.99	1.03	58MEC080–12
CNPV*3617A**	0.98	1.05	58MEC080–12
CNPV*3717A**	1.00	0.99	58MEC080–12
CNPV*4217A**	0.99	1.02	58MEC080–12
CSPH*3612A**	0.99	1.02	58MEC080–12
CSPH*4212A**	0.99	1.00	58MEC080–12
CAP**3617A**	0.99	1.04	58MEC080–16
CNPH*3617A**	0.98	1.05	58MEC080–16
CNPH*4221A**	0.99	1.03	58MEC080–16
CNPV*3617A**	0.98	1.05	58MEC080–16
CNPV*3717A**	1.01	1.00	58MEC080–16
CNPV*4217A**	0.99	1.02	58MEC080–16
CSPH*3612A**	0.99	1.02	58MEC080–16
CSPH*4212A**	1.00	1.01	58MEC080–16
CAP**3621A**	0.98	1.02	58MEC100–20
CAP**4221A**	0.98	1.02	58MEC100–20
CNPH*3617A**	0.98	1.05	58MEC100–20
CNPH*4221A**	0.98	1.03	58MEC100–20
CNPV*3621A**	0.98	1.04	58MEC100–20
CNPV*4221A**	0.98	1.03	58MEC100–20
CSPH*3612A**	0.99	1.01	58MEC100–20
CSPH*4212A**	0.99	0.99	58MEC100–20
CAP**3617A**	0.98	1.04	58MV(B,C)060–14
CNPH*3617A**	0.99	1.06	58MV(B,C)060–14
CNPH*4221A**	0.99	1.03	58MV(B,C)060–14

HEAT PUMP HEATING PERFORMANCE CONTINUED

25HNB536A* Outdoor Section With FX4DNF037 Indoor Section

HEATING INDOOR MODEL	CAPACITY	POWER	FURNACE MODEL
CNPV*3617A**	0.99	1.06	58MV(B,C)060–14
CNPV*3717A**	1.00	0.99	58MV(B,C)060–14
CNPV*4217A**	0.99	1.03	58MV(B,C)060–14
CSPH*3612A**	0.99	1.02	58MV(B,C)060–14
CSPH*4212A**	0.99	1.01	58MV(B,C)060–14
CAP**3621A**	0.98	1.05	58MV(B,C)080–14
CAP**4221A**	0.99	1.05	58MV(B,C)080–14
CNPH*3617A**	0.99	1.07	58MV(B,C)080–14
CNPH*4221A**	0.99	1.05	58MV(B,C)080–14
CNPV*3621A**	0.98	1.07	58MV(B,C)080–14
CNPV*4221A**	0.99	1.05	58MV(B,C)080–14
CNPV*4324A**	1.00	1.00	58MV(B,C)080–14
CNPV*4821A**	0.99	1.02	58MV(B,C)080–14
CNPV*6024A**	0.99	1.00	58MV(B,C)080–14
CSPH*3612A**	0.99	1.03	58MV(B,C)080–14
CSPH*4212A**	0.99	1.02	58MV(B,C)080–14
CAP**3621A**	0.98	1.05	58MV(B,C)080–20
CAP**4221A**	0.98	1.04	58MV(B,C)080–20
CNPH*3617A**	0.98	1.07	58MV(B,C)080–20
CNPH*4221A**	0.98	1.04	58MV(B,C)080–20
CNPV*3621A**	0.98	1.06	58MV(B,C)080–20
CNPV*4221A**	0.98	1.04	58MV(B,C)080–20
CNPV*4324A**	0.99	0.99	58MV(B,C)080–20
CSPH*3612A**	0.99	1.03	58MV(B,C)080–20
CSPH*4212A**	0.99	1.02	58MV(B,C)080–20
CAP**3621A**	0.98	1.04	58MV(B,C)100–20
CAP**4221A**	0.98	1.03	58MV(B,C)100–20
CNPH*3617A**	0.98	1.05	58MV(B,C)100–20
CNPH*4221A**	0.99	1.04	58MV(B,C)100–20
CNPV*3621A**	0.98	1.05	58MV(B,C)100–20
CNPV*4221A**	0.99	1.04	58MV(B,C)100–20
CSPH*3612A**	0.99	1.02	58MV(B,C)100–20
CSPH*4212A**	0.99	1.01	58MV(B,C)100–20
CAP**4224A**	0.98	1.02	58MV(B,C)120–20
CNPH*3617A**	0.98	1.05	58MV(B,C)120–20
CNPH*4221A**	0.98	1.03	58MV(B,C)120–20
CNPV*4324A**	0.99	0.99	58MV(B,C)120–20
CSPH*3612A**	0.99	1.02	58MV(B,C)120–20
CSPH*4212A**	0.99	1.01	58MV(B,C)120–20
CAP**4224A**	0.98	1.05	58MVB040–14
CNPH*3617A**	0.98	1.07	58MVB040–14
CNPH*4221A**	0.99	1.05	58MVB040–14
CNPV*4324A**	0.99	1.00	58MVB040–14
CSPH*3612A**	0.99	1.04	58MVB040–14
CSPH*4212A**	0.99	1.03	58MVB040–14
CAP**3614A**	0.99	1.10	58PH*045–08
CNPH*3617A**	0.99	1.10	58PH*045–08
CNPH*4221A**	1.00	1.08	58PH*045–08
CSPH*3612A**	1.01	1.06	58PH*045–08
CSPH*4212A**	1.01	1.05	58PH*045–08
CAP**3617A**	0.99	1.07	58PH*070–16
CNPH*3617A**	0.99	1.08	58PH*070–16
CNPH*4221A**	0.99	1.05	58PH*070–16
CNPV*3617A**	0.99	1.08	58PH*070–16
CNPV*3717A**	1.01	1.02	58PH*070–16
CNPV*4217A**	1.00	1.05	58PH*070–16
CSPH*3612A**	1.00	1.04	58PH*070–16
CSPH*4212A**	1.00	1.03	58PH*070–16
CAP**3621A**	0.98	1.03	58PH*090–16

HEATING INDOOR MODEL	CAPACITY	POWER	FURNACE MODEL
CAP**4221A**	0.99	1.02	58PH*090–16
CNPH*3617A**	0.98	1.05	58PH*090–16
CNPH*4221A**	0.99	1.03	58PH*090–16
CNPV*3621A**	0.98	1.04	58PH*090–16
CNPV*4221A**	0.99	1.03	58PH*090–16
CSPH*3612A**	0.99	1.01	58PH*090–16
CSPH*4212A**	0.99	1.00	58PH*090–16
CAP**3621A**	0.99	1.02	58PH*110–20
CAP**4221A**	0.99	1.01	58PH*110–20
CNPH*3617A**	0.98	1.04	58PH*110–20
CNPH*4221A**	0.99	1.01	58PH*110–20
CNPV*3621A**	0.98	1.04	58PH*110–20
CNPV*4221A**	0.99	1.01	58PH*110–20
CSPH*3612A**	0.99	1.00	58PH*110–20
CSPH*4212A**	0.99	0.99	58PH*110–20
CAP**3617A**	0.99	1.09	OVLAAB036098
CNPH*3617A**	0.99	1.10	OVLAAB036098
CNPH*4221A**	0.99	1.08	OVLAAB036098
CNPH*4321A**	1.01	1.04	OVLAAB036098
CNPV*3617A**	0.99	1.10	OVLAAB036098
CNPV*3717A**	1.01	1.04	OVLAAB036098
CNPV*4217A**	1.00	1.07	OVLAAB036098
CSPH*3612A**	1.00	1.07	OVLAAB036098
CSPH*4212A**	1.00	1.05	OVLAAB036098
CAP**3621A**	0.99	1.06	OVLAAB048112
CAP**4221A**	0.99	1.05	OVLAAB048112
CNPH*3617A**	0.99	1.08	OVLAAB048112
CNPH*4221A**	1.00	1.06	OVLAAB048112
CNPH*4321A**	1.01	1.02	OVLAAB048112
CNPV*3621A**	0.99	1.08	OVLAAB048112
CNPV*4221A**	1.00	1.06	OVLAAB048112
CSPH*3612A**	1.01	1.05	OVLAAB048112
CSPH*4212A**	1.01	1.03	OVLAAB048112
CNPH*3617A**	1.01	1.05	OVLAAB060154
CNPH*4221A**	1.01	1.02	OVLAAB060154
CNPH*4321A**	1.02	0.98	OVLAAB060154
CSPH*3612A**	1.01	1.01	OVLAAB060154
CSPH*4212A**	1.02	1.00	OVLAAB060154
CAP**3617A**	0.99	1.09	OVMAAB036098
CNPH*3617A**	0.99	1.10	OVMAAB036098
CNPH*4221A**	0.99	1.07	OVMAAB036098
CNPH*4321A**	1.01	1.03	OVMAAB036098
CNPV*3617A**	0.99	1.10	OVMAAB036098
CNPV*3717A**	1.01	1.04	OVMAAB036098
CNPV*4217A**	1.00	1.07	OVMAAB036098
CSPH*3612A**	1.00	1.06	OVMAAB036098
CSPH*4212A**	1.01	1.05	OVMAAB036098
CAP**3617A**	0.99	1.07	OVMAAB042112
CNPH*3617A**	0.99	1.08	OVMAAB042112
CNPH*4221A**	0.99	1.05	OVMAAB042112
CNPH*4321A**	1.00	1.01	OVMAAB042112
CNPV*3617A**	0.99	1.08	OVMAAB042112
CNPV*3717A**	1.01	1.02	OVMAAB042112
CNPV*4217A**	0.99	1.04	OVMAAB042112
CSPH*3612A**	0.99	1.04	OVMAAB042112
CSPH*4212A**	1.00	1.03	OVMAAB042112

See notes on pg. 49

HEAT PUMP HEATING PERFORMANCE CONTINUED

INDOOR AIR		OUTDOOR COIL ENTERING AIR TEMPERATURES deg F																							
		–3			7			17			27			37			47			57			67		
EDB	CFM	Capacity MBtuh		Total System KW†	Capacity MBtuh		Total System KW†	Capacity MBtuh		Total System KW†	Capacity MBtuh		Total System KW†	Capacity MBtuh		Total System KW†	Capacity MBtuh		Total System KW†	Capacity MBtuh		Total System KW†	Capacity MBtuh		Total System KW†
		Total	Integ*		Total	Integ*		Total	Integ*		Total	Integ*		Total	Integ*		Total	Integ*		Total	Integ*		Total	Integ*	
25HNB542A* Outdoor Section With FX4DNF043 Indoor Section																									
65	1225	15.59	14.35	2.29	20.20	18.56	2.45	25.92	23.63	2.65	30.84	27.39	2.83	36.17	32.92	3.00	42.10	42.10	3.16	48.79	48.79	3.32	56.67	56.67	3.45
	1400	15.85	14.58	2.30	20.53	18.87	2.46	26.26	23.95	2.65	31.19	27.70	2.82	36.63	33.33	2.97	42.66	42.66	3.12	49.49	49.49	3.26	57.34	57.34	3.36
	1575	16.10	14.81	2.31	20.82	19.13	2.47	26.55	24.21	2.66	31.50	27.98	2.82	37.01	33.68	2.96	43.12	43.12	3.10	50.13	50.13	3.21	57.72	57.72	3.30
70	1225	14.91	13.71	2.42	19.56	17.97	2.58	24.56	22.39	2.75	30.36	26.97	2.95	35.61	32.40	3.12	41.46	41.46	3.29	48.00	48.00	3.46	55.78	55.78	3.61
	1400	15.19	13.98	2.43	19.88	18.27	2.58	24.93	22.73	2.74	30.71	27.27	2.94	36.05	32.81	3.09	42.00	42.00	3.25	48.69	48.69	3.40	56.54	56.54	3.51
	1575	15.44	14.20	2.45	20.17	18.54	2.59	25.36	23.13	2.75	31.04	27.56	2.93	36.43	33.15	3.08	42.45	42.45	3.22	49.27	49.27	3.37	56.99	56.99	3.45
75	1225	14.21	13.08	2.57	18.88	17.35	2.71	23.85	21.74	2.87	29.87	26.53	3.08	35.07	31.91	3.25	40.82	40.82	3.43	47.26	47.26	3.61	54.86	54.86	3.79
	1400	14.48	13.32	2.58	19.21	17.65	2.71	24.24	22.10	2.87	30.24	26.86	3.06	35.49	32.30	3.22	41.35	41.35	3.38	47.91	47.91	3.55	55.73	55.73	3.68
	1575	14.73	13.55	2.59	19.49	17.91	2.72	24.58	22.41	2.87	30.53	27.11	3.06	35.86	32.63	3.21	41.79	41.79	3.36	48.46	48.46	3.51	56.22	56.22	3.62

HEATING INDOOR MODEL	CAPACITY	POWER	FURNACE MODEL
*FX4DN(B,F)043	1.00	1.00	
FB4CNF042	1.00	1.01	
FB4CNF048	1.00	1.00	
FE4AN(B,F)003	0.99	1.03	
FV4CN(B,F)003	0.99	1.03	
FX4DN(B,F)049	1.00	0.96	
FY5BNF042	1.00	1.02	
FY5BNF048	1.00	1.01	
CAP**4221A**	1.00	1.06	
CAP**4224A**	1.00	1.06	
CAP**4817A**	1.00	1.01	
CAP**4821A**	1.00	1.02	
CAP**4823A**	1.00	1.02	
CAP**4824A**	1.00	1.02	
CNPF*4818A**	1.00	1.03	
CNPH*4221A**	1.00	1.05	
CNPH*4821A**	1.00	1.02	
CNPV*4217A**	1.00	1.03	
CNPV*4221A**	1.00	1.05	
CNPV*4324A**	1.00	1.00	
CNPV*4821A**	1.00	1.02	
CNPV*4824A**	1.00	1.02	
CSPH*4212A**	1.00	1.02	
CSPH*4812A**	1.00	1.01	
CNPH*4221A**	1.00	1.06	58CV(A,X)070–12
CNPH*4821A**	1.00	1.03	58CV(A,X)070–12
CSPH*4212A**	1.00	1.03	58CV(A,X)070–12
CSPH*4812A**	1.00	1.02	58CV(A,X)070–12
CAP**4817A**	1.00	1.00	58CV(A,X)090–16
CNPH*4221A**	1.00	1.04	58CV(A,X)090–16
CNPH*4821A**	1.00	1.01	58CV(A,X)090–16
CNPV*4217A**	1.00	1.03	58CV(A,X)090–16
CSPH*4212A**	1.00	1.01	58CV(A,X)090–16
CSPH*4812A**	1.00	1.01	58CV(A,X)090–16
CAP**4221A**	1.00	1.04	58CV(A,X)110–20
CAP**4821A**	1.00	1.01	58CV(A,X)110–20
CNPH*4221A**	1.00	1.04	58CV(A,X)110–20
CNPH*4821A**	1.00	1.01	58CV(A,X)110–20
CNPV*4221A**	1.00	1.04	58CV(A,X)110–20
CNPV*4324A**	1.00	0.98	58CV(A,X)110–20
CNPV*4821A**	1.00	1.01	58CV(A,X)110–20
CSPH*4212A**	1.00	1.01	58CV(A,X)110–20
CSPH*4812A**	1.00	1.00	58CV(A,X)110–20
CAP**4224A**	0.99	1.02	58CV(A,X)135–22

HEATING INDOOR MODEL	CAPACITY	POWER	FURNACE MODEL
CAP**4824A**	1.00	1.00	58CV(A,X)135–22
CNPH*4221A**	1.00	1.03	58CV(A,X)135–22
CNPH*4821A**	1.00	1.00	58CV(A,X)135–22
CNPV*4324A**	1.00	0.97	58CV(A,X)135–22
CNPV*4824A**	1.00	1.00	58CV(A,X)135–22
CSPH*4212A**	1.00	1.00	58CV(A,X)135–22
CSPH*4812A**	1.00	0.99	58CV(A,X)135–22
CAP**4224A**	0.99	1.02	58CV(A,X)155–22
CAP**4824A**	1.00	1.00	58CV(A,X)155–22
CNPH*4221A**	0.99	1.02	58CV(A,X)155–22
CNPH*4821A**	1.00	1.00	58CV(A,X)155–22
CNPV*4324A**	1.00	0.97	58CV(A,X)155–22
CNPV*4824A**	1.00	1.00	58CV(A,X)155–22
CSPH*4212A**	1.00	1.00	58CV(A,X)155–22
CSPH*4812A**	1.00	0.99	58CV(A,X)155–22
CAP**4823A**	1.00	1.00	58HDV080––20
CNPH*4221A**	1.00	1.04	58HDV080––20
CNPH*4321A**	1.00	0.97	58HDV080––20
CNPH*4821A**	1.00	0.99	58HDV080––20
CSPH*4212A**	1.00	1.00	58HDV080––20
CSPH*4812A**	1.00	0.99	58HDV080––20
CAP**4224A**	1.00	1.03	58HDV100––20
CNPH*4221A**	1.00	1.04	58HDV100––20
CNPH*4321A**	1.00	0.98	58HDV100––20
CNPH*4821A**	1.00	1.00	58HDV100––20
CNPV*4324A**	1.00	0.97	58HDV100––20
CNPV*4824A**	1.00	1.00	58HDV100––20
CSPH*4212A**	1.00	1.01	58HDV100––20
CSPH*4812A**	1.00	0.99	58HDV100––20
CAP**4817A**	1.00	0.99	58MEB040–12
CNPH*4221A**	1.00	1.04	58MEB040–12
CNPH*4821A**	1.00	1.00	58MEB040–12
CNPV*4217A**	1.00	1.02	58MEB040–12
CSPH*4212A**	1.00	1.00	58MEB040–12
CSPH*4812A**	1.00	0.99	58MEB040–12
CAP**4817A**	1.00	0.99	58MEC060–12
CNPH*4221A**	1.00	1.04	58MEC060–12
CNPH*4821A**	1.00	1.00	58MEC060–12
CNPV*4217A**	1.00	1.03	58MEC060–12
CSPH*4212A**	1.00	1.01	58MEC060–12
CSPH*4812A**	1.00	0.99	58MEC060–12
CAP**4817A**	1.00	0.99	58MEC080–12
CNPH*4221A**	1.00	1.04	58MEC080–12
CNPH*4821A**	1.00	1.00	58MEC080–12

HEATING INDOOR MODEL	CAPACITY	POWER	FURNACE MODEL
CNPV*4217A**	1.00	1.02	58MEC080–12
CSPH*4212A**	1.00	1.00	58MEC080–12
CSPH*4812A**	1.00	0.99	58MEC080–12
CAP**4817A**	1.00	1.00	58MEC080–16
CNPH*4221A**	1.00	1.04	58MEC080–16
CNPH*4821A**	1.00	1.01	58MEC080–16
CNPV*4217A**	1.00	1.03	58MEC080–16
CSPH*4212A**	1.00	1.01	58MEC080–16
CSPH*4812A**	1.00	1.00	58MEC080–16
CAP**4221A**	1.00	1.03	58MEC100–20
CAP**4821A**	1.00	1.00	58MEC100–20
CNPH*4221A**	1.00	1.03	58MEC100–20
CNPH*4821A**	1.00	0.99	58MEC100–20
CNPV*4221A**	1.00	1.03	58MEC100–20
CNPV*4324A**	1.00	0.96	58MEC100–20
CNPV*4821A**	1.00	0.99	58MEC100–20
CSPH*4212A**	1.00	0.99	58MEC100–20
CSPH*4812A**	1.00	0.99	58MEC100–20
CAP**4224A**	1.00	1.02	58MEC120–20
CAP**4824A**	1.00	0.98	58MEC120–20
CNPH*4221A**	1.00	1.03	58MEC120–20
CNPH*4821A**	1.00	0.98	58MEC120–20
CNPV*4324A**	1.00	0.95	58MEC120–20
CNPV*4824A**	1.00	0.98	58MEC120–20
CSPH*4212A**	1.00	0.99	58MEC120–20
CSPH*4812A**	1.00	0.98	58MEC120–20
CAP**4817A**	1.00	0.99	58MV(B,C)060–14
CNPH*4221A**	1.00	1.04	58MV(B,C)060–14
CNPH*4821A**	1.00	1.01	58MV(B,C)060–14
CNPV*4217A**	1.00	1.03	58MV(B,C)060–14
CSPH*4212A**	1.00	1.01	58MV(B,C)060–14
CSPH*4812A**	1.00	1.00	58MV(B,C)060–14
CAP**4221A**	1.00	1.06	58MV(B,C)080–14
CAP**4821A**	1.00	1.03	58MV(B,C)080–14
CNPH*4221A**	1.00	1.06	58MV(B,C)080–14
CNPH*4821A**	1.00	1.02	58MV(B,C)080–14
CNPV*4221A**	1.00	1.06	58MV(B,C)080–14
CNPV*4821A**	1.00	1.02	58MV(B,C)080–14
CSPH*4212A**	1.00	1.02	58MV(B,C)080–14
CSPH*4812A**	1.00	1.02	58MV(B,C)080–14
CAP**4221A**	1.00	1.05	58MV(B,C)080–20
CAP**4821A**	1.00	1.02	58MV(B,C)080–20
CNPH*4221A**	1.00	1.05	58MV(B,C)080–20
CNPH*4821A**	1.00	1.02	58MV(B,C)080–20

HEAT PUMP HEATING PERFORMANCE CONTINUED

25HNB542A* Outdoor Section With FX4DNF043 Indoor Section

HEATING INDOOR MODEL	CAPACITY	POWER	FURNACE MODEL
CNPV*4221A**	1.00	1.05	58MV(B,C)080–20
CNPV*4324A**	1.00	0.99	58MV(B,C)080–20
CNPV*4821A**	1.00	1.02	58MV(B,C)080–20
CSPH*4212A**	1.00	1.02	58MV(B,C)080–20
CSPH*4812A**	1.00	1.01	58MV(B,C)080–20
CAP**4221A**	0.99	1.04	58MV(B,C)100–20
CAP**4821A**	1.00	1.03	58MV(B,C)100–20
CNPH*4221A**	1.00	1.06	58MV(B,C)100–20
CNPH*4821A**	1.00	1.02	58MV(B,C)100–20
CNPV*4221A**	1.00	1.06	58MV(B,C)100–20
CNPV*4324A**	1.00	0.99	58MV(B,C)100–20
CNPV*4821A**	1.00	1.02	58MV(B,C)100–20
CSPH*4212A**	1.00	1.03	58MV(B,C)100–20
CSPH*4812A**	1.00	1.02	58MV(B,C)100–20
CAP**4224A**	0.99	1.03	58MV(B,C)120–20
CAP**4824A**	1.00	1.01	58MV(B,C)120–20
CNPH*4221A**	1.00	1.04	58MV(B,C)120–20
CNPH*4821A**	1.00	1.01	58MV(B,C)120–20
CNPV*4324A**	1.00	0.98	58MV(B,C)120–20
CNPV*4824A**	1.00	1.01	58MV(B,C)120–20
CSPH*4212A**	1.00	1.01	58MV(B,C)120–20
CSPH*4812A**	1.00	1.01	58MV(B,C)120–20
CAP**4224A**	1.00	1.06	58MVB040–14
CAP**4824A**	1.00	1.03	58MVB040–14
CNPH*4221A**	1.00	1.06	58MVB040–14
CNPH*4821A**	1.00	1.03	58MVB040–14
CNPV*4324A**	1.00	1.00	58MVB040–14
CNPV*4824A**	1.00	1.03	58MVB040–14
CSPH*4212A**	1.00	1.03	58MVB040–14
CSPH*4812A**	1.00	1.02	58MVB040–14
CAP**4817A**	1.00	1.02	58PH*070–16
CNPH*4221A**	1.00	1.06	58PH*070–16
CNPH*4821A**	1.00	1.03	58PH*070–16
CNPV*4217A**	1.00	1.05	58PH*070–16
CSPH*4212A**	1.00	1.03	58PH*070–16
CSPH*4812A**	1.00	1.02	58PH*070–16
CAP**4221A**	1.00	1.03	58PH*090–16
CAP**4821A**	1.00	1.01	58PH*090–16
CNPH*4221A**	1.00	1.04	58PH*090–16
CNPH*4821A**	1.00	1.00	58PH*090–16
CNPV*4221A**	1.00	1.04	58PH*090–16
CNPV*4821A**	1.00	1.00	58PH*090–16
CSPH*4212A**	1.00	1.00	58PH*090–16
CSPH*4812A**	1.00	0.99	58PH*090–16
CAP**4221A**	1.00	1.03	58PH*110–20
CAP**4821A**	1.00	1.00	58PH*110–20
CNPH*4221A**	1.00	1.03	58PH*110–20
CNPH*4821A**	1.00	0.99	58PH*110–20
CNPV*4221A**	1.00	1.03	58PH*110–20
CNPV*4324A**	1.00	0.96	58PH*110–20
CNPV*4821A**	1.00	0.99	58PH*110–20
CSPH*4212A**	1.00	0.99	58PH*110–20
CSPH*4812A**	1.00	0.99	58PH*110–20
CAP**4224A**	1.00	1.03	58PH*135–20
CAP**4824A**	1.00	0.99	58PH*135–20
CNPH*4221A**	1.00	1.04	58PH*135–20
CNPH*4821A**	1.00	0.99	58PH*135–20
CNPV*4324A**	1.00	0.96	58PH*135–20
CNPV*4824A**	1.00	0.99	58PH*135–20

HEATING INDOOR MODEL	CAPACITY	POWER	FURNACE MODEL
CSPH*4212A**	1.00	1.00	58PH*135–20
CSPH*4812A**	1.00	0.99	58PH*135–20
CAP**4221A**	1.00	1.05	OVLAAB048112
CAP**4821A**	1.00	1.02	OVLAAB048112
CNPH*4221A**	1.00	1.05	OVLAAB048112
CNPH*4321A**	1.00	0.99	OVLAAB048112
CNPH*4821A**	1.00	1.02	OVLAAB048112
CNPV*4221A**	1.00	1.05	OVLAAB048112
CNPV*4821A**	1.00	1.02	OVLAAB048112
CSPH*4212A**	1.00	1.02	OVLAAB048112
CSPH*4812A**	1.00	1.01	OVLAAB048112
CNPH*4221A**	1.00	1.02	OVLAAB060154
CNPH*4321A**	1.00	0.95	OVLAAB060154
CNPH*4821A**	1.00	0.98	OVLAAB060154
CSPH*4212A**	1.00	0.98	OVLAAB060154
CSPH*4812A**	1.00	0.97	OVLAAB060154
CAP**4817A**	1.00	1.01	OVMAAB042112
CNPH*4221A**	1.00	1.06	OVMAAB042112
CNPH*4321A**	1.00	0.99	OVMAAB042112
CNPH*4821A**	1.00	1.02	OVMAAB042112
CNPV*4217A**	1.00	1.04	OVMAAB042112
CSPH*4212A**	1.00	1.02	OVMAAB042112
CSPH*4812A**	1.00	1.02	OVMAAB042112

See notes on pg. 49

HEAT PUMP HEATING PERFORMANCE CONTINUED

INDOOR AIR		OUTDOOR COIL ENTERING AIR TEMPERATURES deg F																							
		–3			7			17			27			37			47			57			67		
EDB	CFM	Capacity MBtuh		Total System KW†	Capacity MBtuh		Total System KW†	Capacity MBtuh		Total System KW†	Capacity MBtuh		Total System KW†	Capacity MBtuh		Total System KW†	Capacity MBtuh		Total System KW†	Capacity MBtuh		Total System KW†	Capacity MBtuh		Total System KW†
		Total	Integ*		Total	Integ*		Total	Integ*		Total	Integ*		Total	Integ*		Total	Integ*		Total	Integ*		Total	Integ*	
25HNB548A* Outdoor Section With FX4DNF049 Indoor Section																									
65	1400	16.55	15.22	2.72	21.89	20.11	2.84	27.57	25.14	2.97	34.59	30.72	3.15	40.52	36.87	3.29	47.09	47.09	3.46	54.69	54.69	3.59	62.57	62.57	3.79
	1600	16.84	15.49	2.75	22.24	20.44	2.86	27.98	25.51	2.98	34.97	31.06	3.14	40.99	37.30	3.27	47.74	47.74	3.39	55.21	55.21	3.52	63.00	63.00	3.70
	1800	17.08	15.71	2.78	22.52	20.69	2.88	28.32	25.82	2.99	35.30	31.35	3.14	41.38	37.66	3.26	48.33	48.33	3.36	55.55	55.55	3.48	63.17	63.17	3.63
70	1400	15.84	14.57	2.83	21.17	19.45	2.95	26.81	24.45	3.09	33.98	30.18	3.28	39.92	36.33	3.44	46.39	46.39	3.61	53.93	53.93	3.76	61.74	61.74	3.97
	1600	16.09	14.80	2.86	21.49	19.75	2.97	27.20	24.80	3.10	34.43	30.58	3.27	40.39	36.75	3.41	47.00	47.00	3.56	54.47	54.47	3.69	62.23	62.23	3.87
	1800	16.35	15.05	2.89	21.80	20.03	2.99	27.57	25.14	3.11	34.79	30.90	3.27	40.79	37.12	3.40	47.64	47.64	3.52	54.85	54.85	3.65	62.48	62.48	3.81
75	1400	15.06	13.85	2.95	20.39	18.73	3.08	26.02	23.73	3.22	32.21	28.60	3.38	39.36	35.82	3.59	45.70	45.70	3.77	53.17	53.17	3.93	60.92	60.92	4.15
	1600	15.31	14.08	2.98	20.71	19.03	3.09	26.42	24.09	3.22	32.70	29.04	3.37	39.81	36.22	3.56	46.27	46.27	3.72	53.75	53.75	3.86	61.42	61.42	4.05
	1800	15.57	14.32	3.01	21.03	19.32	3.12	26.78	24.42	3.24	33.21	29.49	3.38	40.19	36.57	3.55	46.82	46.82	3.69	54.14	54.14	3.82	61.73	61.73	3.99

HEATING INDOOR MODEL	CAPACITY	POWER	FURNACE MODEL
*FX4DN(B,F)049	1.00	1.00	
FB4CNF048	0.99	1.03	
FB4CNF060	1.00	1.02	
FE4AN(B,F)005	0.98	1.00	
FV4CN(B,F)005	0.98	1.00	
FX4DN(B,F)061	1.00	0.97	
FY5BNB060	1.02	1.05	
FY5BNF048	1.00	1.02	
CAP**4817A**	1.00	1.05	
CAP**4821A**	1.01	1.06	
CAP**4823A**	1.01	1.06	
CAP**4824A**	1.01	1.06	
CAP**6021A**	1.01	1.04	
CAP**6024A**	1.01	1.04	
CAP**6025A**	1.01	1.04	
CNPF*4818A**	0.99	1.07	
CNPH*4821A**	1.01	1.06	
CNPH*6024A**	1.01	1.05	
CNPH*6124A**	1.01	1.03	
CNPV*4821A**	1.01	1.06	
CNPV*4824A**	1.01	1.06	
CNPV*6024A**	1.01	1.05	
CNPV*6124A**	1.02	1.04	
CSPH*4812A**	1.01	1.05	
CSPH*6012A**	1.01	1.03	
CAP**4817A**	0.99	1.03	58CV(A,X)090–16
CNPH*4821A**	0.98	1.03	58CV(A,X)090–16
CNPH*6024A**	0.98	1.02	58CV(A,X)090–16
CNPH*6124A**	0.99	1.02	58CV(A,X)090–16
CSPH*4812A**	0.99	1.03	58CV(A,X)090–16
CSPH*6012A**	0.99	1.02	58CV(A,X)090–16
CAP**4821A**	0.98	1.03	58CV(A,X)110–20
CAP**6021A**	0.99	1.02	58CV(A,X)110–20
CNPH*4821A**	0.98	1.02	58CV(A,X)110–20
CNPH*6024A**	0.98	1.01	58CV(A,X)110–20
CNPH*6124A**	0.99	1.01	58CV(A,X)110–20
CNPV*4821A**	0.98	1.02	58CV(A,X)110–20
CNPV*6124A**	0.99	0.99	58CV(A,X)110–20
CSPH*4812A**	0.99	1.03	58CV(A,X)110–20
CSPH*6012A**	0.99	1.01	58CV(A,X)110–20
CAP**4824A**	0.98	1.02	58CV(A,X)135–22
CAP**6024A**	0.98	1.00	58CV(A,X)135–22
CNPH*4821A**	0.98	1.02	58CV(A,X)135–22
CNPH*6024A**	0.98	1.00	58CV(A,X)135–22

HEATING INDOOR MODEL	CAPACITY	POWER	FURNACE MODEL
CNPH*6124A**	0.99	1.01	58CV(A,X)135–22
CNPV*4824A**	0.98	1.02	58CV(A,X)135–22
CNPV*6024A**	0.98	1.00	58CV(A,X)135–22
CNPV*6124A**	0.99	0.99	58CV(A,X)135–22
CSPH*4812A**	0.98	1.01	58CV(A,X)135–22
CSPH*6012A**	0.98	0.99	58CV(A,X)135–22
CAP**4824A**	0.98	1.01	58CV(A,X)155–22
CAP**6024A**	0.98	0.99	58CV(A,X)155–22
CNPH*4821A**	0.98	1.00	58CV(A,X)155–22
CNPH*6024A**	0.98	0.99	58CV(A,X)155–22
CNPH*6124A**	0.98	0.98	58CV(A,X)155–22
CNPV*4824A**	0.98	1.00	58CV(A,X)155–22
CNPV*6024A**	0.98	0.99	58CV(A,X)155–22
CNPV*6124A**	0.98	0.97	58CV(A,X)155–22
CSPH*4812A**	0.98	1.00	58CV(A,X)155–22
CSPH*6012A**	0.98	0.98	58CV(A,X)155–22
CAP**4823A**	1.00	1.05	58HDV080––20
CNPH*4821A**	1.00	1.04	58HDV080––20
CNPH*6024A**	1.00	1.03	58HDV080––20
CNPH*6124A**	1.00	1.02	58HDV080––20
CSPH*4812A**	1.00	1.04	58HDV080––20
CSPH*6012A**	1.00	1.02	58HDV080––20
CAP**6025A**	0.99	1.02	58HDV100––20
CNPH*4821A**	0.99	1.03	58HDV100––20
CNPH*6024A**	0.99	1.02	58HDV100––20
CNPH*6124A**	1.00	1.02	58HDV100––20
CNPV*4824A**	0.99	1.03	58HDV100––20
CNPV*6024A**	0.99	1.02	58HDV100––20
CNPV*6124A**	1.00	1.01	58HDV100––20
CSPH*4812A**	0.99	1.03	58HDV100––20
CSPH*6012A**	1.00	1.02	58HDV100––20
CAP**4817A**	1.00	1.04	58MEC080–16
CNPH*4821A**	0.99	1.03	58MEC080–16
CNPH*6024A**	0.99	1.02	58MEC080–16
CNPH*6124A**	1.00	1.02	58MEC080–16
CSPH*4812A**	0.99	1.03	58MEC080–16
CSPH*6012A**	1.00	1.02	58MEC080–16
CAP**4821A**	0.98	1.02	58MEC100–20
CAP**6021A**	0.99	1.01	58MEC100–20
CNPH*4821A**	0.98	1.01	58MEC100–20
CNPH*6024A**	0.99	1.01	58MEC100–20
CNPH*6124A**	0.99	1.00	58MEC100–20
CNPV*4821A**	0.98	1.01	58MEC100–20
CSPH*4812A**	0.98	1.00	58MEC100–20

HEATING INDOOR MODEL	CAPACITY	POWER	FURNACE MODEL
CSPH*6012A**	0.99	0.99	58MEC100–20
CAP**4824A**	0.98	1.00	58MEC120–20
CAP**6024A**	0.99	1.00	58MEC120–20
CNPH*4821A**	0.98	1.00	58MEC120–20
CNPH*6024A**	0.99	1.00	58MEC120–20
CNPH*6124A**	0.99	0.99	58MEC120–20
CNPV*4824A**	0.98	1.00	58MEC120–20
CNPV*6024A**	0.99	1.00	58MEC120–20
CNPV*6124A**	0.99	0.97	58MEC120–20
CNPV*6124A**	0.99	0.97	58MEC120–20
CSPH*4812A**	0.98	1.00	58MEC120–20
CSPH*6012A**	0.99	0.99	58MEC120–20
CAP**4821A**	0.98	1.04	58MV(B,C)080–20
CAP**6021A**	0.98	1.03	58MV(B,C)080–20
CNPH*4821A**	0.98	1.04	58MV(B,C)080–20
CNPH*6024A**	0.98	1.03	58MV(B,C)080–20
CNPH*6124A**	0.99	1.03	58MV(B,C)080–20
CNPV*4821A**	0.98	1.04	58MV(B,C)080–20
CSPH*4812A**	0.98	1.03	58MV(B,C)080–20
CSPH*6012A**	0.98	1.02	58MV(B,C)080–20
CAP**4821A**	0.99	1.05	58MV(B,C)100–20
CAP**6021A**	0.99	1.03	58MV(B,C)100–20
CNPH*4821A**	0.99	1.04	58MV(B,C)100–20
CNPH*6024A**	0.99	1.03	58MV(B,C)100–20
CNPH*6124A**	1.00	1.03	58MV(B,C)100–20
CNPV*4821A**	0.99	1.04	58MV(B,C)100–20
CNPV*6124A**	1.00	1.02	58MV(B,C)100–20
CNPV*6124A**	1.00	1.02	58MV(B,C)100–20
CSPH*4812A**	0.99	1.04	58MV(B,C)100–20
CSPH*6012A**	0.99	1.02	58MV(B,C)100–20
CAP**4824A**	0.98	1.03	58MV(B,C)120–20
CAP**6024A**	0.99	1.02	58MV(B,C)120–20
CNPH*4821A**	0.98	1.03	58MV(B,C)120–20
CNPH*6024A**	0.98	1.01	58MV(B,C)120–20
CNPH*6124A**	0.99	1.02	58MV(B,C)120–20
CNPV*4824A**	0.98	1.03	58MV(B,C)120–20
CNPV*6024A**	0.98	1.01	58MV(B,C)120–20
CNPV*6124A**	0.99	1.00	58MV(B,C)120–20
CNPV*6124A**	0.99	1.00	58MV(B,C)120–20
CSPH*4812A**	0.99	1.03	58MV(B,C)120–20
CSPH*6012A**	0.99	1.02	58MV(B,C)120–20
CAP**4821A**	0.99	1.03	58PH*090–16
CAP**6021A**	0.99	1.02	58PH*090–16
CNPH*4821A**	0.99	1.03	58PH*090–16

HEAT PUMP HEATING PERFORMANCE CONTINUED

25HNB548A* Outdoor Section With FX4DNF049 Indoor Section

HEATING INDOOR MODEL	CAPACITY	POWER	FURNACE MODEL
CNPH*6024A**	0.99	1.02	58PH*090–16
CNPH*6124A**	0.99	1.01	58PH*090–16
CNPV*4821A**	0.99	1.03	58PH*090–16
CSPH*4812A**	0.99	1.02	58PH*090–16
CSPH*6012A**	0.99	1.01	58PH*090–16
CAP**4821A**	0.98	1.02	58PH*110–20
CAP**6021A**	0.98	1.00	58PH*110–20
CNPH*4821A**	0.98	1.01	58PH*110–20
CNPH*6024A**	0.98	0.99	58PH*110–20
CNPH*6124A**	0.99	1.00	58PH*110–20
CNPV*4821A**	0.98	1.01	58PH*110–20
CSPH*4812A**	0.98	1.00	58PH*110–20
CSPH*6012A**	0.99	0.99	58PH*110–20
CAP**4824A**	0.98	1.02	58PH*135–20
CAP**6024A**	0.99	1.01	58PH*135–20
CNPH*4821A**	0.98	1.01	58PH*135–20
CNPH*6024A**	0.99	1.01	58PH*135–20
CNPH*6124A**	0.99	1.01	58PH*135–20
CNPV*4824A**	0.98	1.01	58PH*135–20
CNPV*6024A**	0.99	1.01	58PH*135–20
CNPV*6124A**	0.99	0.98	58PH*135–20
CSPH*4812A**	0.98	1.01	58PH*135–20
CSPH*6012A**	0.99	1.00	58PH*135–20
CAP**4821A**	1.00	1.07	OVLAAB048112
CAP**6021A**	1.00	1.05	OVLAAB048112
CNPH*4821A**	1.00	1.07	OVLAAB048112
CNPH*6024A**	1.00	1.05	OVLAAB048112
CNPH*6124A**	1.01	1.05	OVLAAB048112
CNPV*4821A**	1.00	1.07	OVLAAB048112
CSPH*4812A**	1.00	1.06	OVLAAB048112
CSPH*6012A**	1.00	1.04	OVLAAB048112
CNPH*4821A**	1.01	1.04	OVLAAB060154
CNPH*6024A**	1.01	1.02	OVLAAB060154
CNPH*6124A**	1.01	1.01	OVLAAB060154
CSPH*4812A**	1.01	1.03	OVLAAB060154
CSPH*6012A**	1.01	1.01	OVLAAB060154

See notes on pg. 49

HEAT PUMP HEATING PERFORMANCE CONTINUED

INDOOR AIR		OUTDOOR COIL ENTERING AIR TEMPERATURES deg F																							
		–3			7			17			27			37			47			57			67		
EDB	CFM	Capacity MBtuh		Total System KW†	Capacity MBtuh		Total System KW†	Capacity MBtuh		Total System KW†	Capacity MBtuh		Total System KW†	Capacity MBtuh		Total System KW†	Capacity MBtuh		Total System KW†	Capacity MBtuh		Total System KW†	Capacity MBtuh		Total System KW†
		Total	Integ*		Total	Integ*		Total	Integ*		Total	Integ*		Total	Integ*		Total	Integ*		Total	Integ*		Total	Integ*	
25HNB560A* Outdoor Section With FX4DNF061 Indoor Section																									
65	1750	20.88	19.21	3.31	27.26	25.05	3.45	34.02	31.02	3.60	41.60	36.94	3.76	50.26	45.73	3.96	58.37	58.37	4.15	68.00	68.00	4.38	78.95	78.95	4.62
	2000	21.30	19.60	3.35	27.75	25.50	3.48	34.60	31.55	3.61	42.46	37.71	3.76	50.83	46.25	3.94	59.12	59.12	4.11	69.17	69.17	4.29	79.81	79.81	4.53
	2250	21.68	19.94	3.40	28.17	25.89	3.52	35.08	31.98	3.63	43.85	38.95	3.80	51.36	46.73	3.94	59.75	59.75	4.09	69.90	69.90	4.25	80.36	80.36	4.47
70	1750	19.82	18.23	3.45	26.24	24.11	3.60	33.08	30.16	3.75	40.53	36.00	3.92	49.53	45.07	4.15	57.50	57.50	4.34	66.89	66.89	4.59	77.83	77.83	4.82
	2000	20.23	18.62	3.49	26.72	24.55	3.63	33.63	30.66	3.77	41.18	36.58	3.92	50.11	45.60	4.12	58.23	58.23	4.30	67.91	67.91	4.50	78.70	78.70	4.73
	2250	20.61	18.96	3.54	27.14	24.94	3.66	34.10	31.09	3.79	41.75	37.08	3.93	50.63	46.08	4.12	58.85	58.85	4.28	68.90	68.90	4.44	79.31	79.31	4.67
75	1750	18.71	17.21	3.59	25.18	23.14	3.75	32.07	29.24	3.92	39.48	35.07	4.09	48.83	44.44	4.34	56.65	56.65	4.54	65.78	65.78	4.80	76.71	76.71	5.04
	2000	19.12	17.59	3.63	25.65	23.58	3.78	32.61	29.73	3.93	40.11	35.62	4.09	49.43	44.98	4.31	57.38	57.38	4.50	66.86	66.86	4.71	77.61	77.61	4.94
	2250	19.49	17.93	3.68	26.08	23.96	3.82	33.08	30.16	3.96	40.67	36.12	4.10	49.89	45.40	4.30	57.98	57.98	4.47	67.79	67.79	4.65	78.22	78.22	4.87

HEATING INDOOR MODEL	CAPACITY	POWER	FURNACE MODEL
*FX4DN(B,F)061	1.00	1.00	
FB4CNF060	1.00	1.05	
FE4ANB006	1.00	1.00	
FV4CNB006	1.00	1.00	
FY5BNB060	1.02	1.07	
CAP**6021A**	1.01	1.06	
CAP**6024A**	1.01	1.06	
CAP**6025A**	1.01	1.06	
CNPH*6024A**	1.01	1.06	
CNPH*6124A**	1.01	1.05	
CNPV*6024A**	1.01	1.06	
CNPV*6124A**	1.01	1.04	
CSPH*6012A**	1.01	1.05	
CAP**6021A**	1.00	1.05	58CV(A,X)110–20
CNPH*6024A**	1.00	1.05	58CV(A,X)110–20
CNPH*6124A**	1.01	1.05	58CV(A,X)110–20
CSPH*6012A**	1.00	1.04	58CV(A,X)110–20
CAP**6024A**	1.00	1.04	58CV(A,X)135–22
CNPH*6024A**	0.99	1.03	58CV(A,X)135–22
CNPH*6124A**	1.00	1.03	58CV(A,X)135–22
CNPV*6024A**	0.99	1.03	58CV(A,X)135–22
CNPV*6124A**	1.00	1.01	58CV(A,X)135–22
CSPH*6012A**	1.00	1.03	58CV(A,X)135–22

HEATING INDOOR MODEL	CAPACITY	POWER	FURNACE MODEL
CAP**6024A**	0.99	1.02	58CV(A,X)155–22
CNPH*6024A**	0.99	1.02	58CV(A,X)155–22
CNPH*6124A**	1.00	1.02	58CV(A,X)155–22
CNPV*6024A**	0.99	1.02	58CV(A,X)155–22
CNPV*6124A**	1.00	1.01	58CV(A,X)155–22
CSPH*6012A**	1.00	1.02	58CV(A,X)155–22
CNPH*6024A**	1.02	1.09	58HDV080––20
CNPH*6124A**	1.03	1.08	58HDV080––20
CSPH*6012A**	1.03	1.08	58HDV080––20
CAP**6025A**	1.01	1.07	58HDV100––20
CNPH*6024A**	1.01	1.07	58HDV100––20
CNPH*6124A**	1.02	1.07	58HDV100––20
CNPV*6024A**	1.01	1.07	58HDV100––20
CNPV*6124A**	1.02	1.05	58HDV100––20
CSPH*6012A**	1.02	1.06	58HDV100––20
CNPH*6024A**	0.99	1.06	58MEC080–16
CSPH*6012A**	1.00	1.05	58MEC080–16
CAP**6021A**	0.99	1.04	58MEC100–20
CNPH*6024A**	0.99	1.04	58MEC100–20
CNPH*6124A**	1.00	1.04	58MEC100–20
CSPH*6012A**	1.00	1.03	58MEC100–20
CAP**6024A**	0.99	1.03	58MEC120–20
CNPH*6024A**	0.99	1.03	58MEC120–20

HEATING INDOOR MODEL	CAPACITY	POWER	FURNACE MODEL
CNPH*6124A**	0.99	1.02	58MEC120–20
CNPV*6024A**	0.99	1.03	58MEC120–20
CNPV*6124A**	1.00	1.01	58MEC120–20
CSPH*6012A**	0.99	1.02	58MEC120–20
CNPV*6124A**	1.01	1.04	58MV(B,C)120–20
CSPH*6012A**	1.00	1.04	58MV(B,C)120–20
CAP**6021A**	1.00	1.04	58PH*110–20
CNPH*6024A**	0.99	1.03	58PH*110–20
CNPH*6124A**	1.00	1.03	58PH*110–20
CSPH*6012A**	1.00	1.02	58PH*110–20
CAP**6024A**	1.00	1.05	58PH*135–20
CNPH*6024A**	0.99	1.04	58PH*135–20
CNPH*6124A**	1.00	1.04	58PH*135–20
CNPV*6024A**	0.99	1.04	58PH*135–20
CNPV*6124A**	1.00	1.02	58PH*135–20
CSPH*6012A**	1.00	1.03	58PH*135–20
CAP**6024A**	1.00	1.04	OVLAAB060154
CAP**6025A**	1.00	1.04	OVLAAB060154
CNPH*6024A**	0.99	1.04	OVLAAB060154
CNPH*6124A**	1.00	1.03	OVLAAB060154
CNPV*6024A**	0.99	1.03	OVLAAB060154
CNPV*6124A**	1.00	1.02	OVLAAB060154
CSPH*6012A**	1.00	1.03	OVLAAB060154

* Tested combination.

† The kW values include the compressor, outdoor fan motor, and indoor blower motor. The kW from supplement heaters should be added to these values to obtain total system kilowatts.

‡The Btuh heating capacity values shown are net integrated values from which the defrost effect has been subtracted. The Btuh heating from supplement heaters should be added to those values to obtain total system capacity.

NOTE: When the required data falls between the published data, interpolation may be performed. Extrapolation is not an acceptable practice.

EDB — Entering Dry Bulb

GUIDE SPECIFICTIONS
GENERAL

System Description

Outdoor-mounted, air-cooled, split-system heat pump unit suitable for ground or rooftop installation. Unit consists of a hermetic compressor, an air-cooled coil, propeller-type condenser fan, and a control box. Unit will discharge supply air upward as shown on contract drawings. Unit will be used in a refrigeration circuit to match up to a packaged fan coil or coil unit.

Quality Assurance

— Unit will be rated in accordance with the latest edition of AHRI Standard 240.

— Unit will be certified for capacity and efficiency, and listed in the latest AHRI directory.

— Unit construction will comply with latest edition of ANSI/ ASHRAE and with NEC.

— Unit will be constructed in accordance with UL standards and will carry the UL label of approval. Unit will have C-UL approval.

— Unit cabinet will be capable of withstanding Federal Test Method Standard No. 141 (Method 6061) 500-hr salt spray test.

— Air-cooled condenser coils are pressure tested and the outdoor units are leak tested.

— Unit constructed in ISO9001 approved facility.

Delivery, Storage, and Handling

— Unit will be shipped as single package only and is stored and handled per unit manufacturer's recommendations.

Warranty (for inclusion by specifying engineer)

— U.S. and Canada only.

PRODUCTS

Equipment

— Factory-assembled, single-piece, air-cooled heat pump unit. Contained within the unit enclosure is all factory wiring, piping, controls, compressor, refrigerant charge Puron® (R-410A), and special features required prior to field start-up.

Unit Cabinet

— Unit cabinet will be constructed of galvanized steel, bonderized, and coated with a powder coat paint.

Fans

— Condenser fan will be direct-drive propeller type, discharging air upward.

— Condenser fan motors will be totally enclosed, 1-phase type with class B insulation and permanently lubricated bearings.

— Shafts will be corrosion resistant.

— Fan blades will be statically and dynamically balanced.

— Condenser fan openings will be equipped with steel wire safety guards.

Compressor

— Compressor will be hermetically sealed.

— Compressor will be mounted on rubber vibration isolators.

Condenser Coil

— Condenser coil will be air cooled.

— Coil will be constructed of aluminum fins mechanically bonded to copper tubes which are then cleaned, dehydrated, and sealed.

Refrigeration Components

— Refrigeration circuit components will include liquid-line shutoff valve with sweat connections, vapor-line shutoff valve with sweat connections, system charge of Puron® (R-410A) refrigerant, POE compressor oil, accumulator, and reversing valve.

Operating Characteristics

— The capacity of the unit will meet or exceed _____ Btuh at a suction temperature of _____°F/°C. The power consumption at full load will not exceed _____ kW.

— Combination of the unit and the evaporator or fan coil unit will have a total net cooling capacity of _____ Btuh or greater at conditions of _____ CFM entering air temperature at the evaporator at _____ °F/°C wet bulb and _____ °F/°C dry bulb, and air entering the unit at _____ °F/°C.

— The system will have a SEER of _____ Btuh/watt or greater at DOE conditions.

Electrical Requirements

— Nominal unit electrical characteristics will be _____ v, single phase, 60 hz. The unit will be capable of satisfactory operation within voltage limits of _____ v to _____ v.

— Unit electrical power will be single point connection.

— Control circuit will be 24v.

Special Features

— Refer to section of this literature identifying accessories and descriptions for specific features and available enhancements.

SYSTEM DESIGN SUMMARY

1. Intended for outdoor installation with free air inlet and outlet. Outdoor fan external static pressure available is less than 0.01-in. wc.
2. Minimum outdoor operating air temperature without low-ambient operation accessory is 55°F (12.8°C).
3. Maximum outdoor operating air temperature for cooling mode is 125°F (51.7°C).
4. Minimum outdoor operating air temperature for heating mode is –30°F (–34.4°C).
5. Maximum outdoor operating air temperature for heating mode is 66°F (18.9°C).
6. For reliable operation, unit should be level in all horizontal planes.
7. For interconnecting refrigerant tube lengths greater than 80 ft (23.4 m) and/or elevation differences between indoor and outdoor units greater than 20 ft (6.1 m), consult Residential Piping and Longline Guideline and Service Manual available from equipment distributor.
8. If any refrigerant tubing is buried, provide a 6 in. (152.4 mm) vertical rise to the valve connections at the unit. Refrigerant tubing lengths up to 36 in. (914.4 mm) may be buried without further consideration. Do not bury refrigerant lines longer than 36 in. (914.4 mm).
9. Use only copper wire for electric connection at unit. Aluminum and clad aluminum are not acceptable for the type of connector provided.
10. Do not apply capillary tube indoor coils to these units.
11. Factory-supplied filter drier must be installed.

Copyright 2011 Carrier Corp. ● 7310 W. Morris St. ● Indianapolis, IN 46231 Printed in U.S.A. Edition Date: 04/11 **Catalog No: 25HNB5–1PD**

Manufacturer reserves the right to change, at any time, specifications and designs without notice and without obligations. Replaces: New