40GXC / 38GXC Cooling Only
40GXQ / 38GXQ Heat Pump
Inverter–Driven High Wall Duct–Free Split System
Sizes 009 to 012

Carrier®
Turn to the Experts.℠

XPOWER INVERTER

Service Manual

INTRODUCTION

This Service Manual provides the necessary information to service, repair, and maintain the 38/40GXC(Q).

TABLE OF CONTENTS

	PAGE
SAFETY CONSIDERATIONS	1
MODEL / SERIAL NUMBER NOMENCLATURE	2
STANDARD FEATURES AND ACCESSORIES	3
SPECIFICATIONS	4
DIMENSIONS	5
CLEARANCES	6
SYSTEM OPERATING ENVELOPE	7
ELECTRICAL DATA	7
WIRING	7
CONNECTION DIAGRAMS	7
WIRING DIAGRAMS	8-9
REFRIGERATION CYCLE DIAGRAM	10
REFRIGERANT LINES	11
SYSTEM EVACUATION AND CHARGING	11
CONTROL SYSTEM	12-13
SEQUENCE OF OPERATION	13
MODES OF OPERATION	13-15
TROUBLESHOOTING	16
DIAGNOSTIC CHARTS	23
APPENDIX	24-27

SAFETY CONSIDERATIONS

Improper installation, adjustment, alteration, service, maintenance, or use can cause explosion, fire, electrical shock, or other conditions which may cause death, personal injury, or property damage. Consult a qualified installer, service agency, or your distributor or branch for information or assistance. The qualified installer or agency must use factory-authorized kits or accessories when modifying this product. Refer to the individual instructions packaged with the kits or accessories when installing.

Follow all safety codes. Wear safety glasses, protective clothing, and work gloves. Use quenching cloth for brazing operations. Have fire extinguisher available. Read these instructions thoroughly and follow all warnings or cautions included in literature and attached to the unit. Consult local building codes and National Electrical Code (NEC) for special requirements.

Recognize safety information. This is the safety-alert symbol ⚠ When you see this symbol on the unit and in instructions or manuals, be alert to the potential for personal injury.

Understand these signal words: DANGER, WARNING, and CAUTION. These words are used with the safety-alert symbol. DANGER identifies the most serious hazards which **will** result in severe personal injury or death. WARNING signifies hazards which **could** result in personal injury or death. CAUTION is used to identify unsafe practices which **may** result in minor personal injury or product and property damage. NOTE is used to highlight suggestions which **will** result in enhanced installation, reliability, or operation.

⚠ WARNING

ELECTRICAL SHOCK HAZARD

Failure to follow this warning could result in personal injury or death.

Before installing, modifying, or servicing system, main electrical disconnect switch must be in the OFF position. There may be more than 1 disconnect switch. Lock out and tag switch with a suitable warning label.

MODEL NUMBER NOMENCLATURE

38/40GXQ

INDOOR UNIT

40 GXQ 009 – 1–01

- **40** – Fan Coil Unit
- **GXQ** – **Unit Type**
  - **GXQ** – Heat Pump
  - **GXC** – Cooling Only
- **009** – **Nominal Capacity**
  - **009** – 3/4 Ton
  - **012** – 1 Ton
- **1–01** – **Voltage**
  - **1** – 115–1–60

OUTDOOR UNIT

38 GXQ 009 – 1–01

- **38** – Air–Cooled Condenser
- **GXQ** – **Unit Type**
  - **GXQ** – Heat Pump
  - **GXC** – Cooling Only
- **009** – **Nominal Capacity**
  - **009** – 3/4 Ton
  - **012** – 1 Ton
- **1–01** – **Voltage**
  - **1** – 115–1–60

ARI Standard 210/240 UAC

ARI Standard 210/240 UHP

SERIAL NUMBER NOMENCLATURE

01 06 V 00001

- **01** – **Week of Manufacture**
- **06** – **Year of Manufacture**
- **V** – **Manufacturing Site**
- **00001** – **Serial Number**

STANDARD FEATURES AND ACCESSORIES

Ease Of Installation	
Mounting Brackets	S
Low Voltage Controls	S
Comfort Features	
Microprocessor Controls	S
Wireless Remote Control	S
Rapid Cooling/Heating	S
Automatic Air Sweep	S
Cold Blow Prevention	S
Continuous Fan *	S
Auto Restart Feature	S
Memory Function	S
Auto Changeover	S
Energy Saving Features	
Inverter Driven Compressor	S
Sleep Mode	S
24 Hour Stop/Start Timer	S
Safety And Reliability	
Indoor Unit Freeze Protection	S
3 Minute Compressor Time Delay	S
High Compressor Discharge Temperature	S
Low Voltage Protection	S
Compressor Overload Protection	S
Compressor Over current Protection	S
IPM Module Protection	S
Ease Of Service And Maintenance	
Cleanable Filters	S
Diagnostic LED's On Outdoor Board	S
Error Messages Displayed Front Panel	S
Application Flexibility	
Condensate Pump	A
Wind Baffle	F
Standard Warranty	
6 Year Compressor Limited Warranty*	S
2 Year Parts Limited Warranty*	S
Extended Warranty	
6 – 10 Year Compressor Only	O
2 – 6 Year Parts Only	O
2 – 6 Year Parts; 1 – 6 Yr Labor	O
2 – 6 Yr Parts; 6 – 10 Yr Compressor Only; 1 – 6 Yr Labor	O

Legend
S Standard
A Accessory
O Optional
F Field Fabricated
***** For Residential applications. For Commercial applications, warranty is 1 year for parts and 5 years for compressor.

INDOOR UNITS

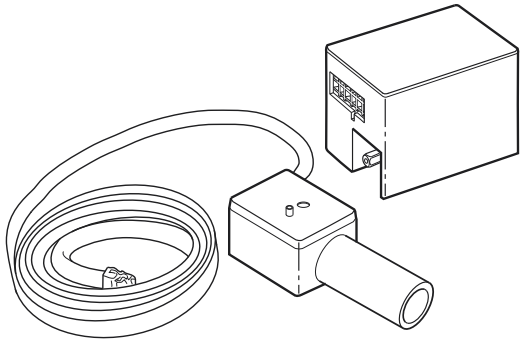

Fig. 1 – Condensate Pump Accessory

On high wall fan coils, the condensate pump accessory is recommended when adequate drain line pitch cannot be provided, or when the condensate must move up to exit.

The pump has a lift capability of 12 ft (3.6 m) on the discharge side if the pump is mounted in the fan coil or 6 ft (1.8 m) on the suction side if the pump is remote mounted.

PRODUCT SPECIFICATIONS

	System Model Number	53GXC009– – –1	53GXC012– – –1	53GXQ009– – –1	53GXQ012– – –1
System	System Voltage	115 V	115 V	115 V	115 V
	Control Voltage	0 – 24v DC	0 – 24v DC	0 – 24v DC	0 – 24v DC
	Capacity (Btuh) Clg/Htg	8,600/–	12,000/–	8,600/10,800	12,000/11,200
	SEER/HSPF	16/–	16/–	16/7.7	16/7.7
Refrigerant	Refrigerant Type	R–410A			
	Design Pressure (PSIG)	560	560	560	560
	Metering Device	Capillary Tube at Outdoor			
	Charge (lb)	2.65	2.8	2.65	2.8
Compressor	Type	Twin Rotary Inverter Driven			
	Model	C–6RZ092H1AB	C–6RZ092H1AB	C–6RZ092H1AB	C–6RZ092H1AB
	Oil Charge (POE –oz)	11.6	11.6	11.6	11.6
	Rated Current (RLA)	4	3.92	4	3.92
	Locked Rotor Amp (LRA)	33	33	33	33
Outdoor Motor	Rpm/CFM	830/1060	830/1060	830/1060	830/1060
	Diameter (in) .. No. of Blades	15.7 … 3	15.7 … 3	15.7 … 3	15.7 … 3
	Motor (hp)	0.04	0.04	0.04	0.04
	Capacitor	2.5µF/450VAC	2.5µF/450VAC	2.5µF/450VAC	2.5µF/450VAC
Outdoor Coil	Face Area (sq. ft)	3.5			
	No. Rows	2			
	Fins per inch	18			
	Circuits	2			
Indoor Motor	Motor Watts/HP	20/0.027			
	Rpm/Cfm (High)	1200/290	1350/315	1200/290	1350/315
	Rpm/Cfm (Medium)	1060/245	1200/268	1060/245	1200/268
	Rpm/Cfm (Low)	700/224	1100/245	700/224	1100/245
	Blower Diameter … Length (in)	3.8 … 23	3.6 … 24.3	3.8 … 23	3.6 … 24.3
Indoor Coil	Face Area (sq. ft)	2.4	2.4	2.4	2.4
	No. Rows	2			
	Fins per inch	18			
	Circuits	2	3	2	3
Refrigerant Lines	Connection Type	Flare			
	Liquid (Mix Phase) (in) OD	1/4”			
	Vapor Line (in) OD	1/2”			
	Condensate Drain (in)	ID = 1/2” OD=5/8”			
	Maximum Length (ft)	65	65	65	100
	Max Lift (Fan Coil Above) (ft)	35	35	35	50
	Max Drop (Fan Coil Below) (ft)	35	35	35	50

DIMENSIONS - INDOOR

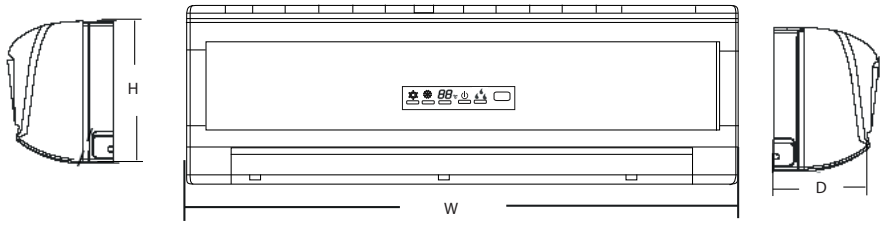

A08289

Unit Size	W In. (mm)	H In. (mm)	D In. (mm)	Net Operating Weight Lbs. (Kg)
9k	30.3 (770)	9.8 (250)	7.84 (1.99)	18.7 (8.5)
12k	32.7 (830)	11.2 (285)	8.9 (225)	24.2 (11)

Fig. 2 – Dimensions of Indoor Unit

DIMENSIONS - OUTDOOR

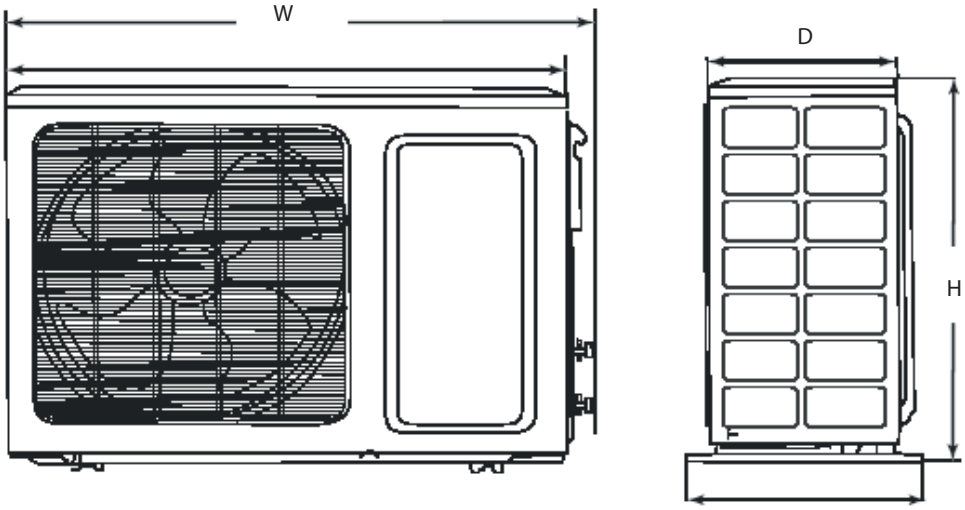

A08290

Unit Size	W In. (mm)	D In. (mm)	H In. (mm)	Net Operating Weight Lbs. (Kg)
9k & 12k	33.4 (848)	12.6 (320)	21.3 (540)	88 (40)

Fig. 3 – Dimensions of Outdoor Unit

CLEARANCES - INDOOR

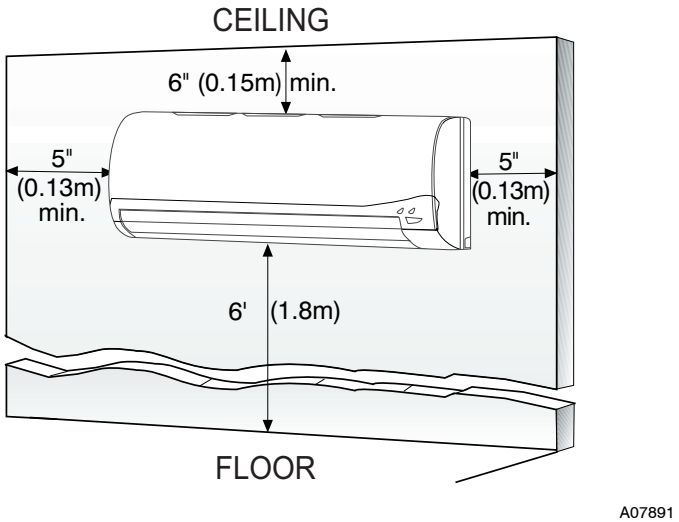

Fig. 4 – Indoor unit clearance

CLEARANCES - OUTDOOR

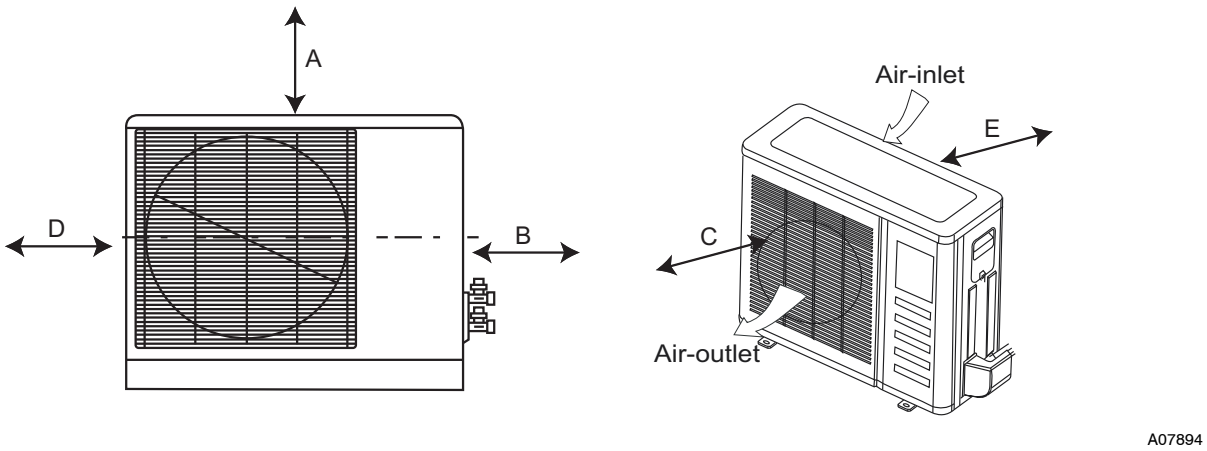

UNIT	12k in. (mm)
A	20 (508)
B	20 (508)
C	24 (610)
D	12 (305)
E	12 (305)

Fig. 5 – Outdoor Unit Clearance

38/40GXQ SYSTEM OPERATING ENVELOPE

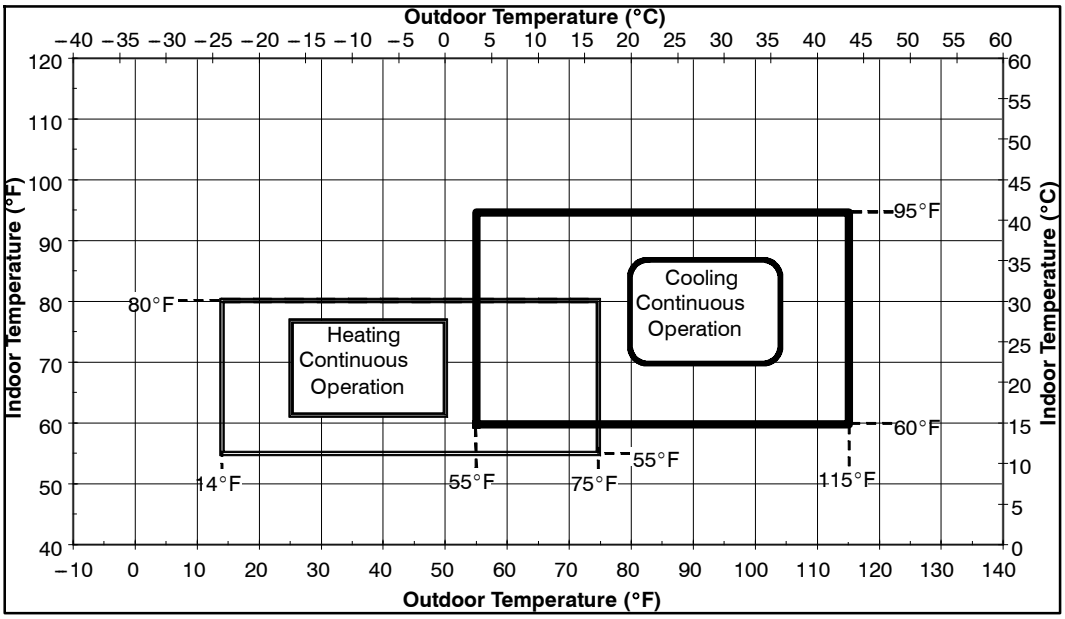

NOTE: Low ambient controls cannot be used with these systems

A09247

Fig. 6 – 38/40GXQ System Operating Envelope

ELECTRICAL DATA

UNIT SIZE	SYSTEM VOLTAGE	OPERATING VOLTAGE*	COMPRESSOR		OUTDOOR FAN			INDOOR FAN†				MCA	MAX FUSE/CB AMP
	VOLTS–PH–HZ	MAX/MIN	RLA	LRA	FLA	HP	W	VOLTS	FLA	HP	W		
009	115–1–60	127/104	4.0	33	.6	.04	30	115	.3	.027	30	20	25
012			4.0	33					.45	.027	20	20	25

* Permissible limits of the voltage range at which the unit will operate satisfactorily
† Indoor fan powered from outdoor unit.

LEGEND
FLA – Full Load Amps
LRA – Locked Rotor Amps
MCA – Minimum Circuit Amps
RLA – Rated Load Amps

WIRING

The main power is supplied to the outdoor unit. The field supplied connecting cable from the outdoor unit to indoor unit consists of four wires and provides the power for the indoor unit as well as the communication signal between the outdoor unit and indoor unit.

Voltage drop on the connecting cable should be kept to a minimum. Use cable size and max length below:

18 AWG	50 ft. (16 m)
16 AWG	100 ft. (33 m)

CONNECTION DIAGRAMS

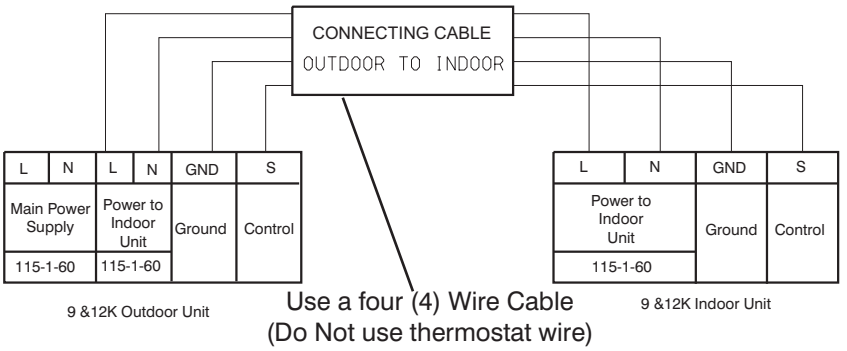

A08292

Fig. 7 – Connection Diagrams

38/40GXQ

WIRING DIAGRAMS

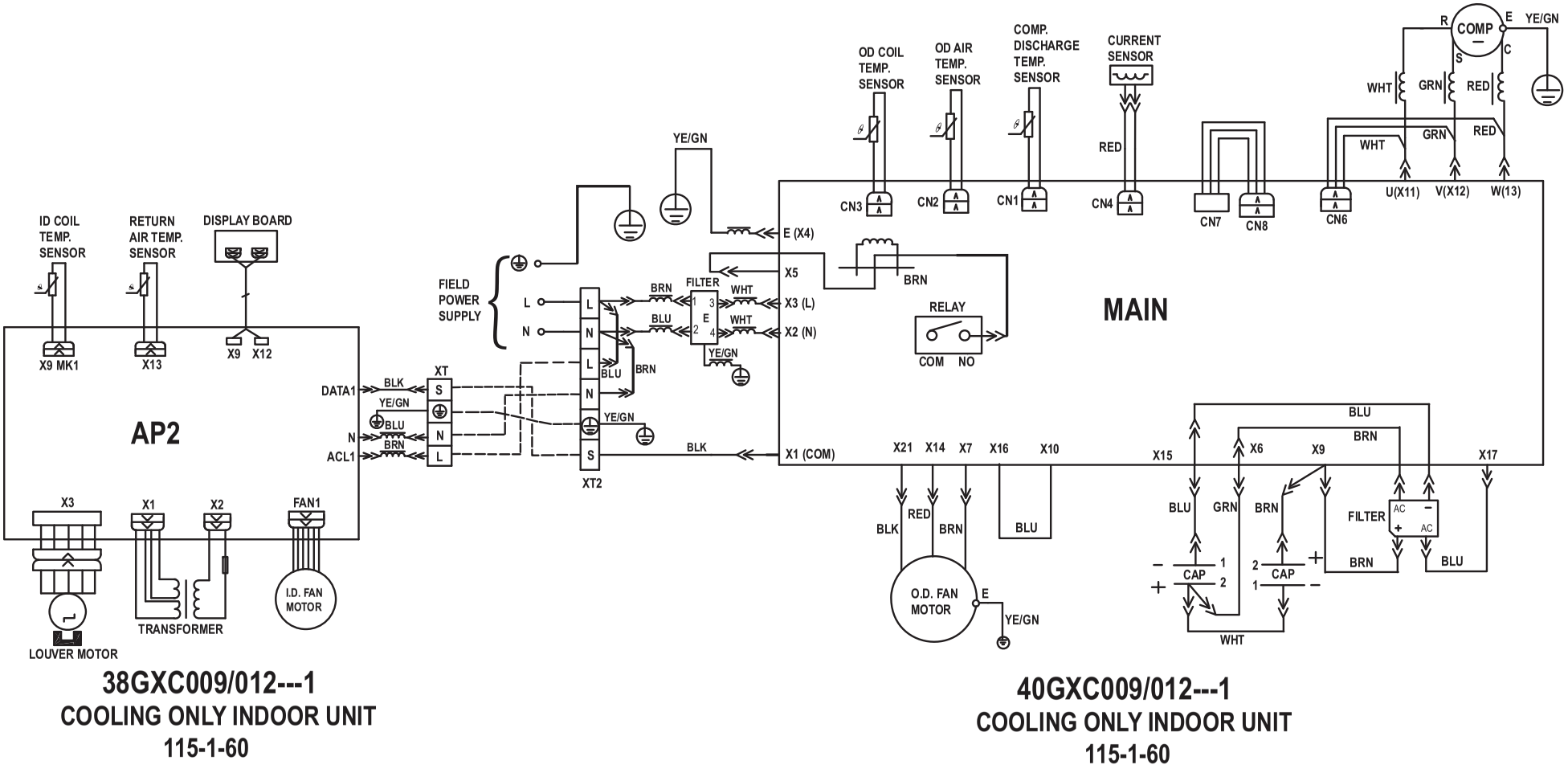

Fig. 8 – 38-40GXC009/012 Cooling Only Wiring Diagram

WIRING DIAGRAMS (CONT.)

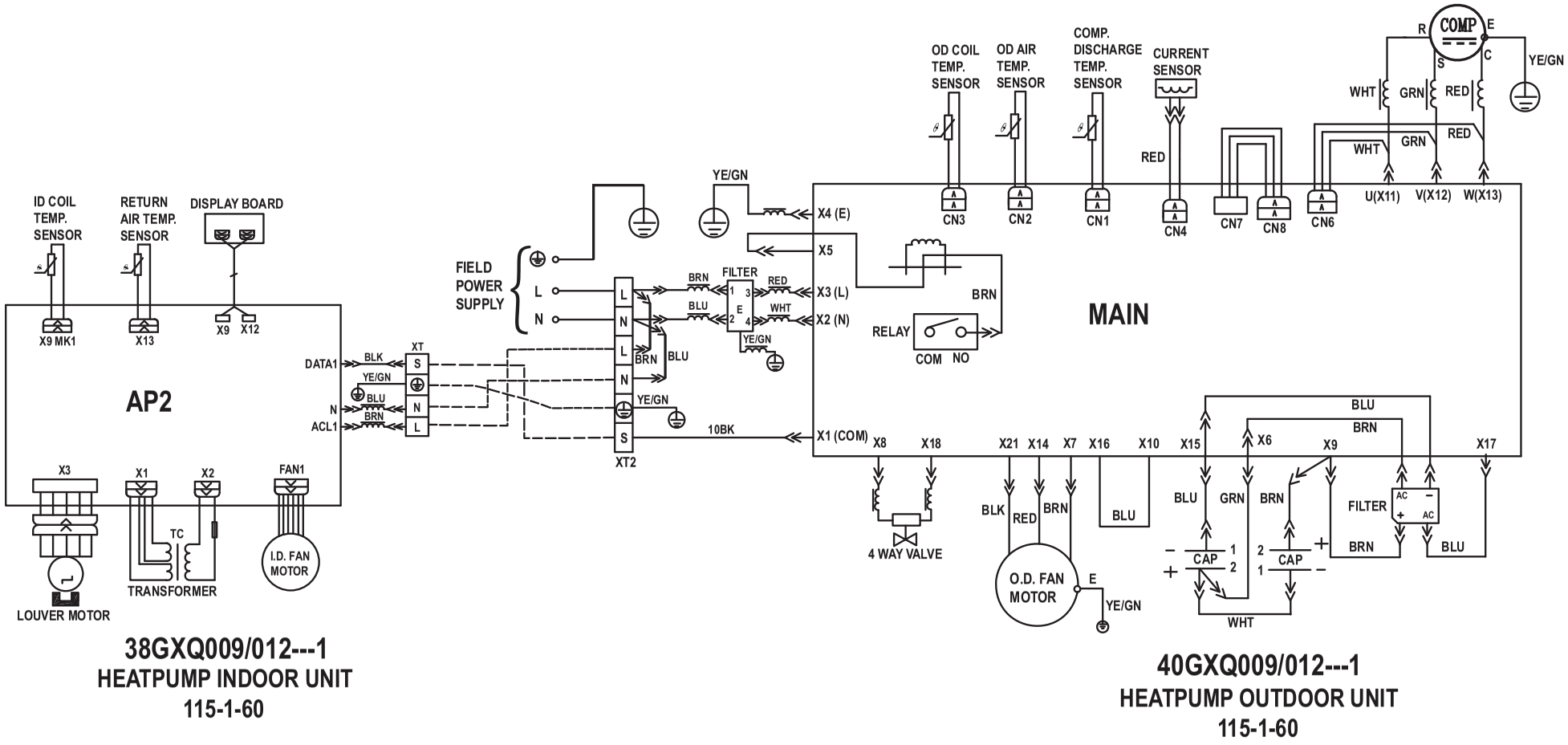

Fig. 9 – 38-40GXQ009/012 Heat Pump Wiring Diagram

REFRIGERATION CYCLE DIAGRAM

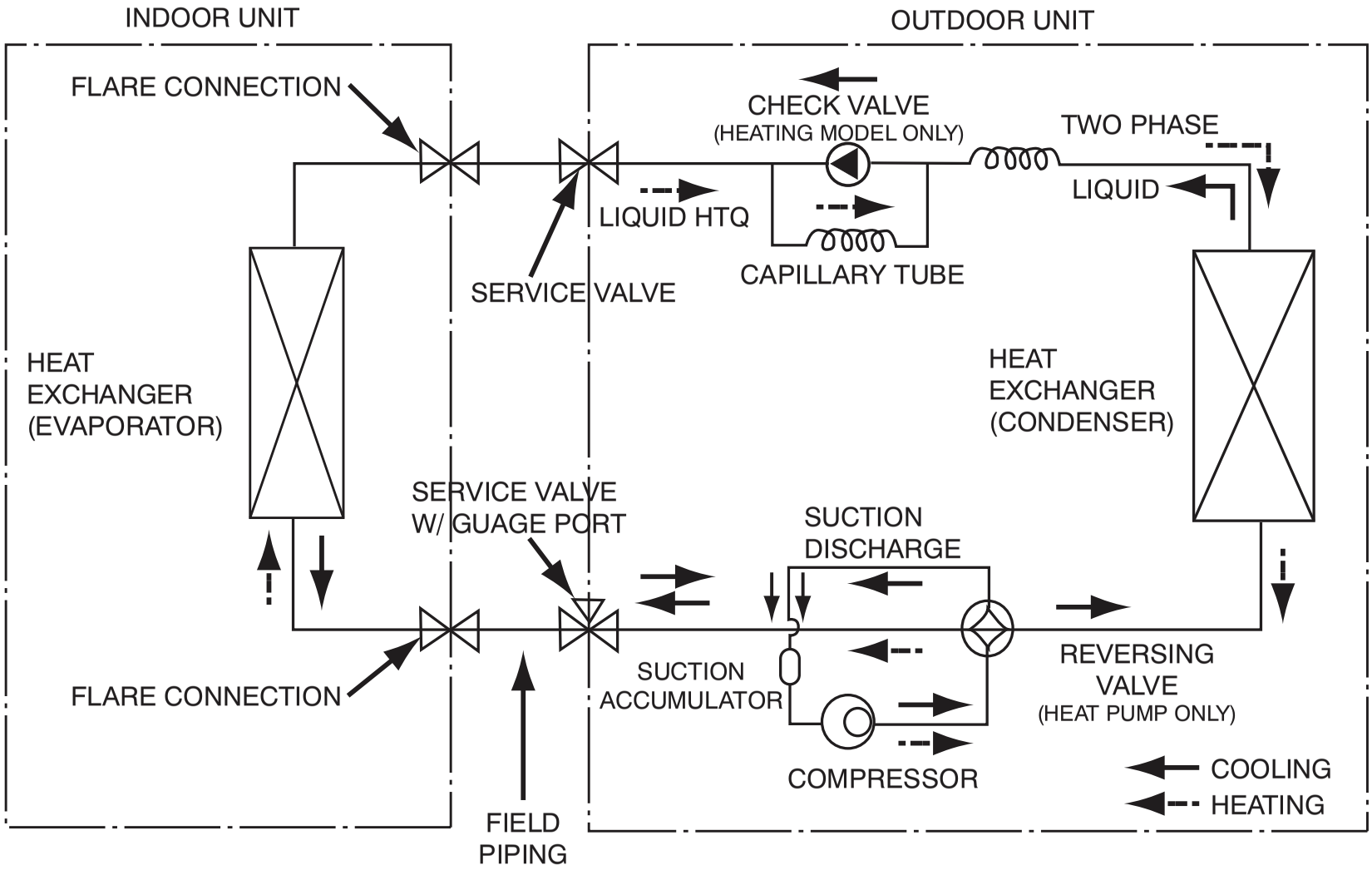

Fig. 10 – Refrigeration Cycle Diagram

REFRIGERANT LINES

Routing – Refrigerant lines can be routed in any of the four directions shown in Fig. 10.

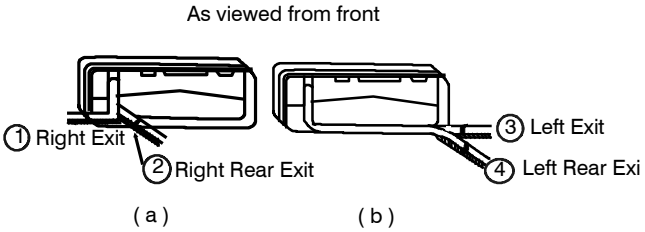

Fig. 11 – Refrigerant Line Routing

A08281

General Guidelines:

1. The 38GXQ units are shipped with full charge of R-410A refrigerant. All charges, line sizing, and capacities are based on runs of 25ft (7.6 m). For runs over 25ft (7.6 m), consult long line section for charge adjustments.
2. Refrigerant lines should not be buried in the ground. If it is necessary to bury the lines, not more than 36 inches (914 mm) should be buried. Provide a minimum of 6 inch (152 mm) vertical rise to service valves to prevent refrigerant migration.
3. Both lines must be insulated. Use a minimum of 1/2 inch (12.7 mm) thick insulation. Closed-cell insulation is recommended in all long-line applications.
4. Special consideration should be given to isolating interconnecting tubing from the building structure. Isolate the tubing so that vibration or noise is not transmitted into the structure.

Long Line Applications:

1. A field fabricated wind baffle is recommended.
2. No change in line sizing is required.
3. Add refrigerant per table below.

ADDITIONAL CHARGE TABLE

Unit Size	Additional Charge, oz./ft ft (m)	
	10 – 25 (3.05 – 7.62)	>25 – 65 (7.62–19.81)
9K hp	None	0.48
12K hp		

4. Reduction in capacity due to long lines can be calculated from the chart below.

CAPACITY LOSS

Capacity, % Loss			
	Line Length, ft (m)		
Cooling:	25 (7.62)	45 (13.7)	65 (19.8)
9 & 12 KBTU/H models	0%	2%	5%
Heating:			
9 & 12 KBTU/H models	0%	7%	11%

SYSTEM EVACUATION AND CHARGING

⚠ CAUTION

UNIT DAMAGE HAZARD

Failure to follow this caution may result in equipment damage or improper operation.

Never use the system compressor as a vacuum pump.

Refrigerant tubes and indoor coil should be evacuated using the recommended deep vacuum method of 500 microns. The alternate triple evacuation method may be used if the procedure outlined below is followed. Always break a vacuum with dry nitrogen.

SYSTEM VACUUM AND CHARGE

Using Vacuum Pump

1. Completely tighten flare nuts A, B, C, D, connect manifold gage charge hose to a charge port of the low side service valve. (See Fig. 15.)
2. Connect charge hose to vacuum pump.
3. Fully open the low side of manifold gage. (See Fig. 16)
4. Start vacuum pump
5. Evacuate using either deep vacuum or triple evacuation method.
6. After evacuation is complete, fully close the low side of manifold gage and stop operation of vacuum pump.
7. The factory charge contained in the outdoor unit is good for up to 25 ft. (8 m) of line length. For refrigerant lines longer than 25 ft (8 m), add 0.1 oz. per foot of extra piping up to the maximum allowable length.
8. Disconnect charge hose from charge connection of the low side service valve.
9. Fully open service valves B and A.
10. Securely tighten caps of service valves.

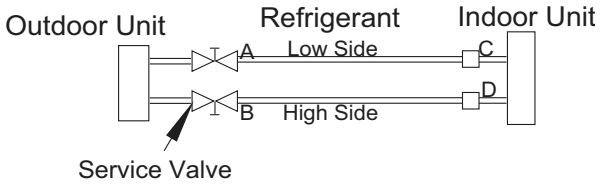

A07360

Fig. 12 – Service Valve

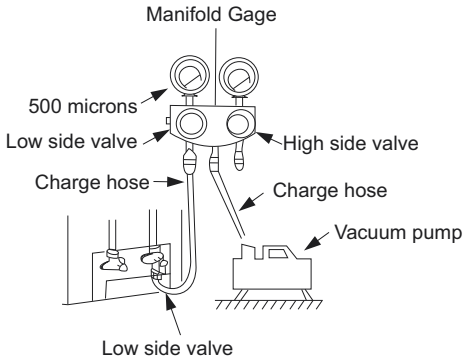

A07361

Fig. 13 – Manifold

38/40GXC(Q)

SYSTEM SAFETIES

Safety	CODE	POSSIBLE CAUSE
3 Minute Time Delay	–	–
Freeze Protection, Indoor Coil	E2	Low Refrigerant Charge, Blocked Indoor Air Flow, or Dirty Air Filter
High Compressor Discharge Temperature	E4	Low Refrigerant Charge, or Blocked Capillary
Low Voltage Protection	E5	Low Voltage
High Condensing Temperature	H3	High Ambient Temperature, or Loss of Condenser Airflow
Compressor Over Current Protection	H4	High Ambient Temperature, or Loss of Condenser Airflow
IPM Module Protection	H5	Loss of Cooling to Heat Sink, High Ambient, Low Voltage, or Bad Connections

CONTROL SYSTEM

The 53GXC(Q) units are equipped with microprocessors in the indoor and outdoor units. They perform the following two functions:

1. Provide safety for the system
2. Control the system and provide optimum levels of comfort and efficiency.

3 Minute Time Delay

In order to protect the compressor, there is a 3 minute delay on break even if the control is calling for heating or cooling.

Indoor Coil Freeze Protection

When the unit is running in the COOL or DRY MODE, the indoor coil can freeze due to any of the following:

- Low system charge
- Reduced indoor airflow
- Restricted refrigerant flow
- Low ambient temperature (outdoor)
- Low load (indoor)

The indoor coil thermistor monitors the coil temperature continuously. Any time the coil temperature drops below 30.2°F (-1°C), the compressor and the outdoor fan (30 seconds later) will be switched off until the coil temperature rises above 42.8°F (6°C) and the compressor was off for a minimum of 3 minutes.

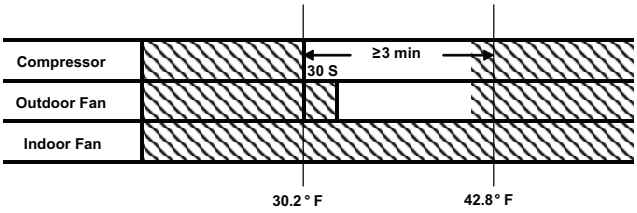

A09346

Fig. 14 – Coil Freeze Protection

High Compressor Discharge Temperature

The compressor discharge temperature can be high due to any of the following:

- Low refrigerant charge
- Blocked capillary

The compressor discharge line thermistor continuously monitors the temperature and communicates with the microprocessor. Depending on the temperature measured, the compressor will be allowed to increase the frequency to meet the load or is forced to run the current or reduced frequency. If the temperature gets excessively high, the compressor will be de-energized as shown below:

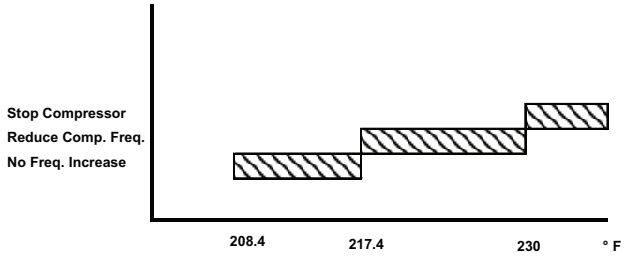

A09347

Fig. 15 – Compressor Gas Discharge Temperature Protection

When the compressor discharge temperature drops below 194°F, the unit will resume normal operations.

Low Voltage Protection

If the incoming voltage is below the minimum allowed, E5 will be displayed on the front panel of the indoor unit.

Condenser High Temperature Protection

Condenser high temperature can occur due to any of the following conditions:

- High outdoor ambient
- Outdoor fan blocked
- Outdoor coil blocked

The outdoor coil thermistor continuously monitors the temperature and communicates with the microprocessor. Depending on the temperature measured, the compressor will be allowed to increase the frequency if needed to meet the load or is forced to run at the current or reduced frequency. If the temperature gets excessively high the compressor will be de-energized as shown below:

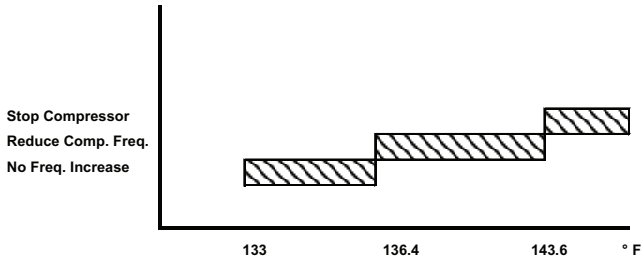

A09348

Fig. 16 – High Temperature Protection

When the outdoor coil temperature drops to 123.8°F, the unit will resume normal operations.

NOTE: In heating the indoor fan is de-energized 60 seconds after the compressor is de-energized.

Compressor Over Current Protection

Over current protection can result due to any of the following:

- The ambient temperature is too high
- Locked rotor on the compressor
- Blockage in the refrigeration circuit (capillary tubes for example)
- Outdoor air is blocked or restricted

The compressor current is monitored continuously. Based on the amp draw measured, the microprocessor will allow the compressor to increase frequency, maintain frequency, drop frequency, and eventually de-energized the compressor if excessive amps are experienced.

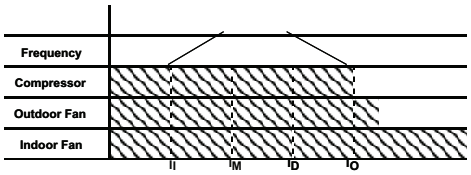

Current	9K	12K
I_I	6	7
I_M	7	8
I_D	8	9
I_O	9	10

A09349

Fig. 17 – Overcurrent Protection

IPM Module Protection

This can be caused by any of the following:

- Loss of cooling to the heat sink
- High ambient temperatures
- Low voltage
- Loose screws fastening the board to the heat sink

When this occurs, H5 is displayed on the LED display on the front panel of the indoor unit.

SEQUENCE OF OPERATION

Interface

A wireless remote control, supplied with the unit, is the interface between the fan coil and the user. The wireless remote control has the following characteristics:

- Dedicated controllers for °C or °F. Each indoor units comes with two remotes that are clearly labeled for the appropriate temperature scale.
- The remote control range is from 61°F (16.1°C)to 86°F (30°C).
- The same remote is used for both cooling only and heat pump units
- The wireless remote control range is 25 ft (7.6 m).
- The same remote can be used to control more than one unit.
- If the remote control is lost, damaged, or the batteries are exhausted, the system can be operated using the manual button located under the front panel

MODES OF OPERATION

The units have five main operating modes:

1. Fan only
2. Cooling
3. Heating (heat pump only)
4. Auto
5. Dry (Dehumidification)

The units also have the manual mode that allows the unit to be operated without the remote control.

Fan Only Mode

In this mode, the system circulates the room air without changing the room air temperature.

Cooling Mode

In this mode, the system cools and dries the room air with the fan running continuously, either at a selected fan speed or Auto fan speed. The fan runs even when the compressor cycles off. This feature enhances room comfort and efficiency of the system.

Compressor, Outdoor Fan Operations, and Indoor fan Operation

As shown below, the compressor and outdoor fan motor cycle on and off based on the conditions of the set point and the room temperature. The indoor fan runs continuously.

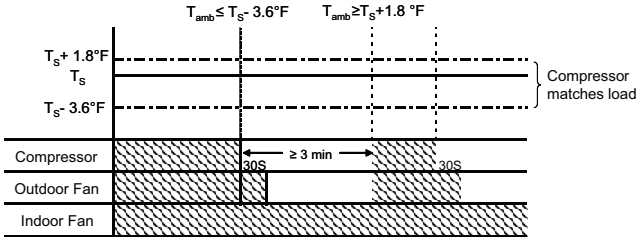

A09249

Fig. 18 – Cooling Mode

Indoor Fan Operation - Cooling

When in cooling mode, the fan runs continuously either at the chosen set speed, or in Auto mode, where the speed is determined by the microprocessor based on the difference between the room temperature and the temperature set point as shown below:

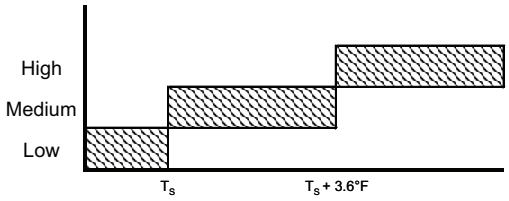

A09250

Fig. 19 – Auto Fan - Cool Only Mode

Heating Mode

In this mode, the system heats the room air with the indoor fan running at either the selected speed or on Auto. As the cooling mode, the indoor fan will run continuously unless interrupted by the cold blow algorithm. This algorithm will not allow the fan to run if the indoor coil temperature drops below a preset value.

Compressor and fan operation

As shown below, the compressor and outdoor fan cycle on and off based on the actual room temperature versus the set point. The outdoor fan is de-energized 30 seconds after the compressor is de-energized. The reversing valve is energized in heating and will stay energized for 2 minutes after the compressor is de-energized. The reversing valve is energized 2 seconds before the compressor is energized.

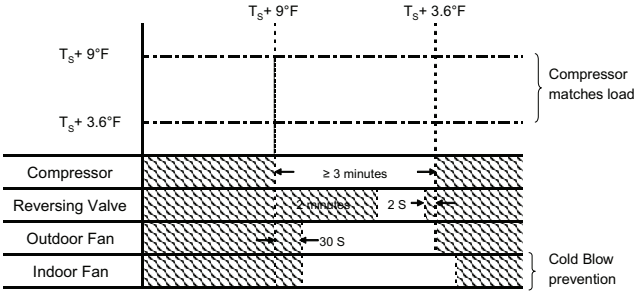

A09252

Fig. 20 – Heat Mode

Indoor Fan Operation – Heating

When in heating mode, as long as the coil temperature is above the threshold for cold blow prevention, the fan runs continuously either at the chosen set speed, or in Auto mode, where the speed is determined by the microprocessor based on the difference between the room temperature and the temperature set point as shown below:

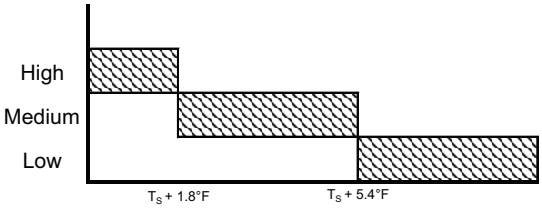

A09254

Fig. 21 – Auto Fan - Heat Mode

Cold Blow Prevention

This function prevents the cold air from blowing into a space when in heat mode. When there is a demand for heating one of the following conditions occurs:

- If the indoor coil temperature is < 106°F (41.1°C) and the room temperature is < 75°F (23.4°C), there will be a 3 minute time delay before the indoor fan runs at low speed for 5 minutes.
- If the indoor coil temperature is ≥106°F (41.1°C) and the room temperature is ≥75°F (23.4°C, the indoor fan will run at low speed for 1 minute.

After one of the above steps occur, the indoor fan speed will be determined as shown below:

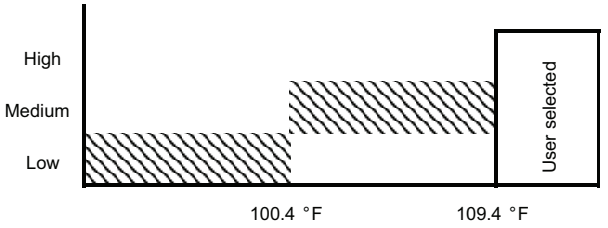

A09354

Fig. 22 – Cold Blow Prevention

Defrost

Defrost is controlled by the microprocessor and will occur if the unit operated in the heating mode for at least 45 minutes and any of the conditions below lasted for more than 3 minutes.

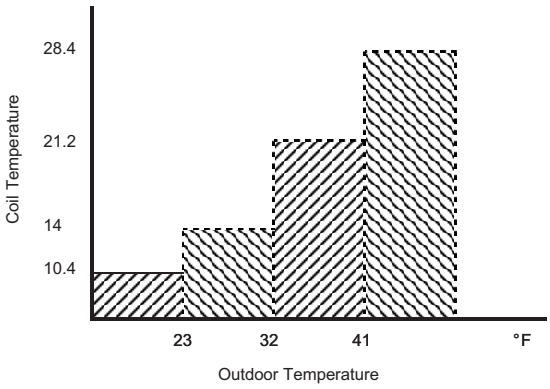

A09355

Fig. 23 – Defrost

The defrost cycle will terminate 12 minutes after the initiation of the defrost cycle or when the coil temperature is ≥50°F (10°C). The defrost algorithm is shown below:

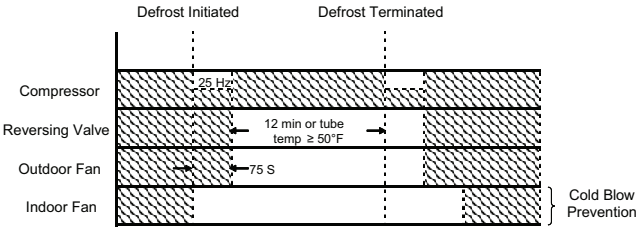

A09256

Fig. 24 – Defrost (continued)

AUTO MODE

When the Auto setting is selected, at startup the unit will run in cooling, fan only, or heating based on the room temperature at shown below.

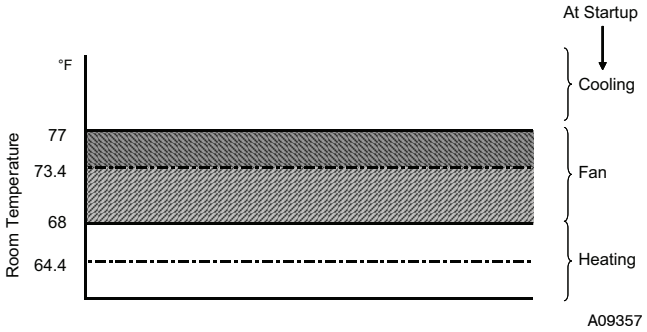

Fig. 25 – AUTO Mode

After startup and if the unit is running in cooling, the compressor will be de-energized when the room temperature is 73.4°F (23°C). If the unit was running in heating, the compressor will be de-energized when the room temperature is 73.4°F (23°C).

There is a 6 minute time delay before modes are switched.

SLEEP MODE

Additional energy savings can be realized by selecting the Sleep mode. When the sleep setting is selected, the temperature set point is adjusted automatically as shown below:

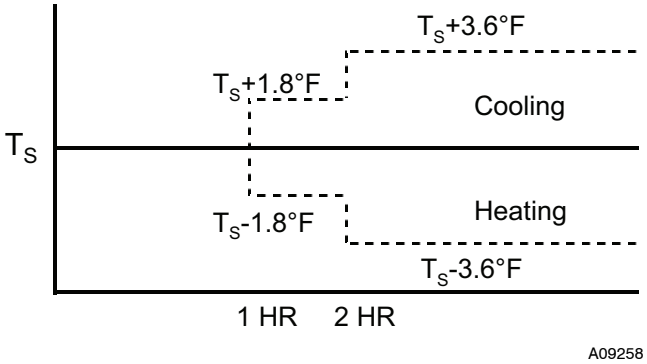

Fig. 26 – SLEEP Mode

38/40GXC(Q)

TROUBLESHOOTING

This section provides the required flow charts to troubleshoot problems that may arise.

NOTE: **Information required in the diagnoses can be found either on the wiring diagrams or in the appendix.**

Required Tools:

The following tools are needed when diagnosing the units:

- Digital multimeter
- Screw drivers (Phillips and straight head)
- Needle-nose pliers

Recommended Steps

1. Refer to the diagnostic hierarchy chart below and determine the problem at hand.
2. Go to the chart listed in the diagnostic hierarchy and follow the steps in the chart for the selected problem.

Error codes, if they occur, are displayed on the LED panel on the front cover of the unit. In addition, some of the same errors are displayed by flashing LEDs on the outdoor board. If possible, always check the diaganostic codes displayed on the indoor unit first.

For problems requiring measurements at the control boards:

1. Always disconnect the main power.
2. When possible check the outdoor board first.
3. Start by removing the outdoor unit top cover.
4. Reconnect the main power
5. Probe the outdoor board inputs and outputs with a digital multi-meter referring to the wiring diagrams and input/output charts found in the appendix.
6. Connect the red probe to hot signal and the black probe to the ground or negative.
7. Note that some of the DC voltage signals are pulse will give continuously variable readings.
8. If it is necessary to check the indoor unit board you must start by disconnecting the main power.
9. Next remove the front cover of the unit and then control box cover.
10. Carefully remove the indoor board from the control box, place it face up on a plastic surface (not metal).
11. Reconnect the main power and repeat steps 5,6, and 7.
12. Disconnect main power before reinstalling board to avoid shock hazard and board damage.

For problems requiring pressure measurements:

1. Connect the low pressure gauge to the gauge connection port on the suction service valve
2. Set compressor speed using the system remote control as follows:
   COOLING – Select a set point of 66°F and push the sleep button 4 times
   HEATING – Select a set point of 84°F and push the sleep button 4 times
3. With the system operating at steady state conditions, make the following measurements:
   a. Outdoor ambient temperature
   b. Compressor discharge temperature as close to the compressor as possible
   c. Suction pressure
4. Refer to the Appendix and select a suction pressure and discharge temperature range based on the outdoor ambient temperature for either cooling or heating. Compare the measured pressure and temperature to the values in the chart to determine if the operating pressures and temperatures of the systems are normal or not.

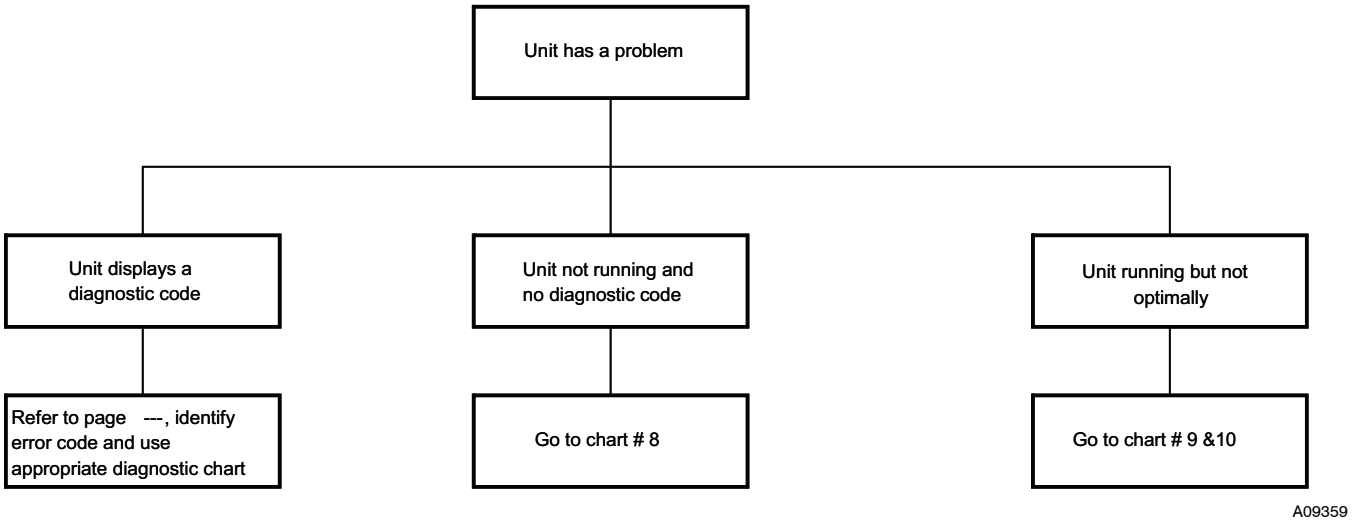

Fig. 27 – Diagnostic Hierarchy

DIAGNOSTIC CHARTS

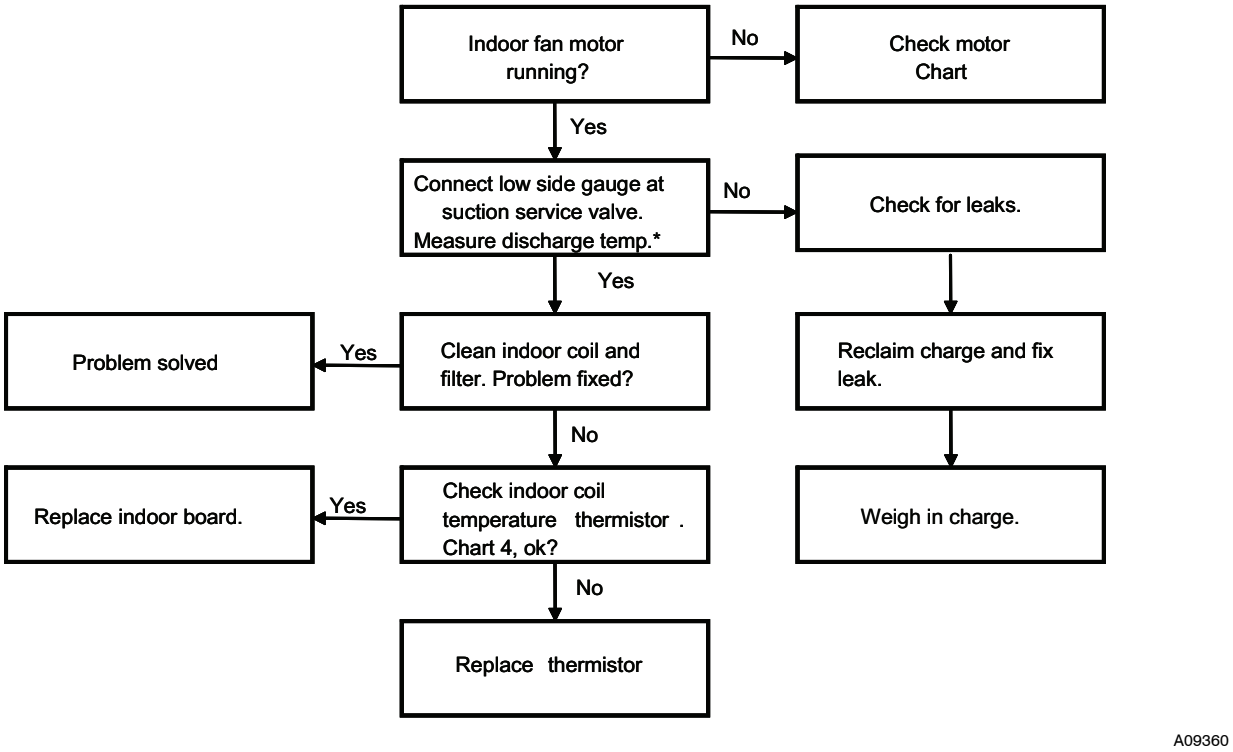

Fig. 28 – Indoor Freeze Protection

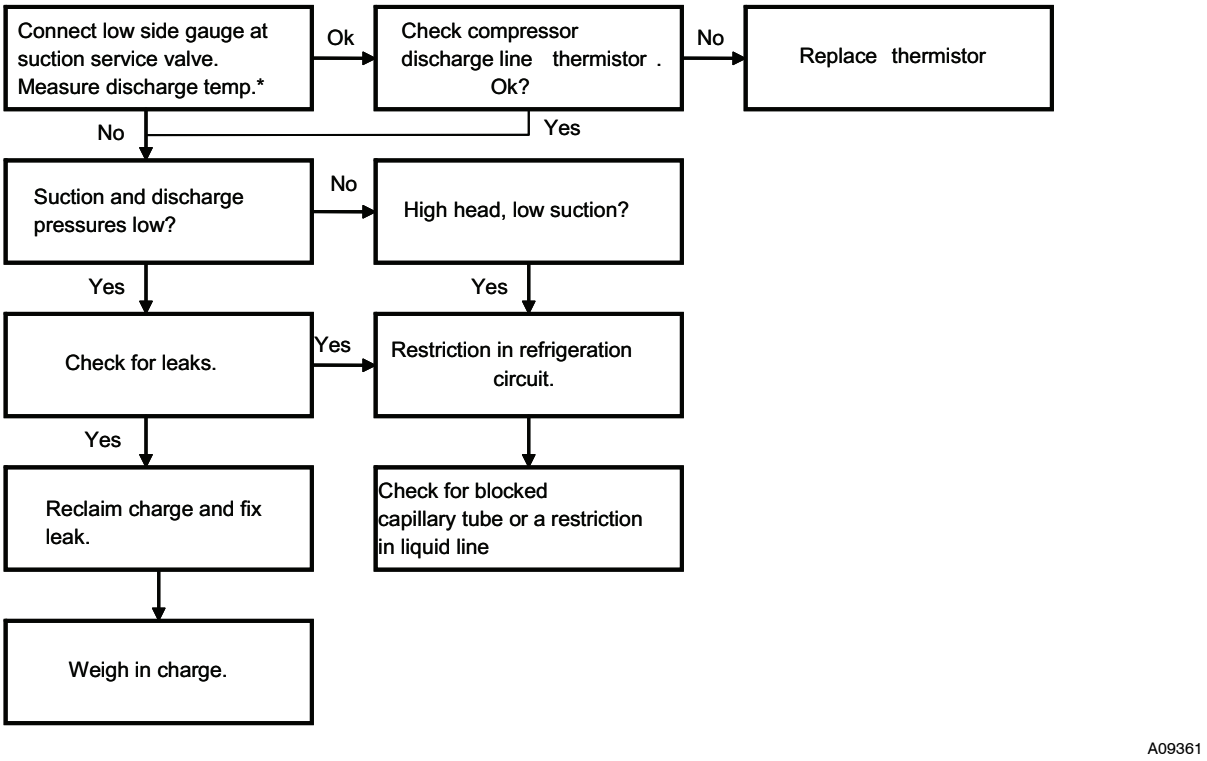

Fig. 29 – High Compressor Discharge Temperature

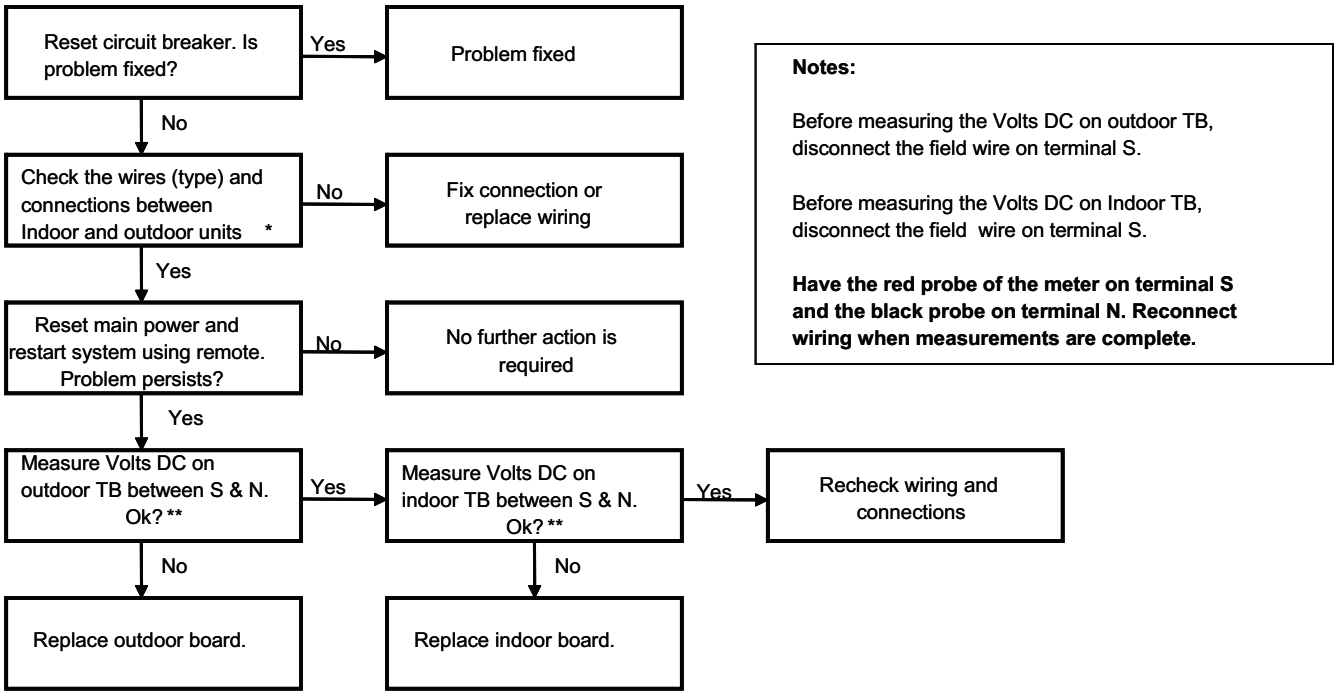

* Thermostat wires cannot be used. Wires should be connected per connection diagrams. Failure to do that will result in a communication error. **Polarity needs to be maintained between indoor and outdoor units**

** There is 3 minutes to make the measurement before the diagnostic light comes back on.

A09362

Fig. 30 – Communication Error

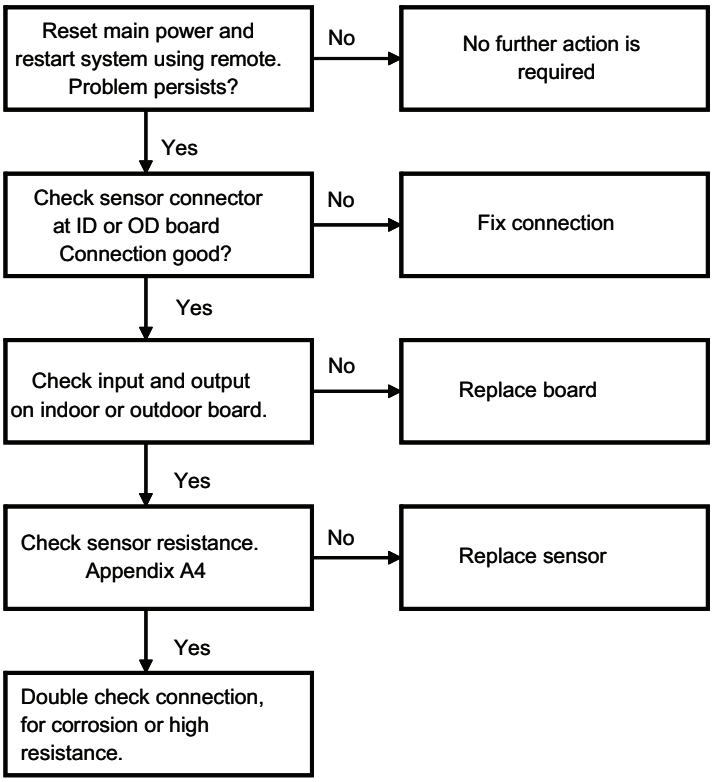

A09363

Fig. 31 – Temperature Sensor

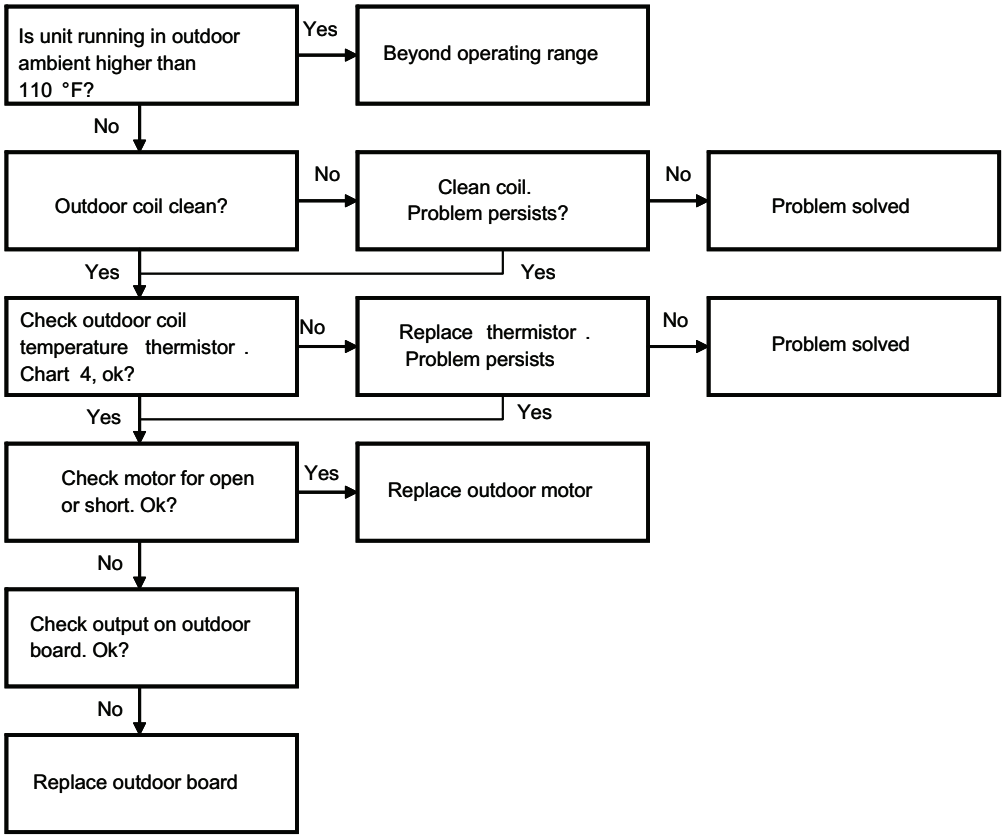

Fig. 32 – High Condensing Temperature

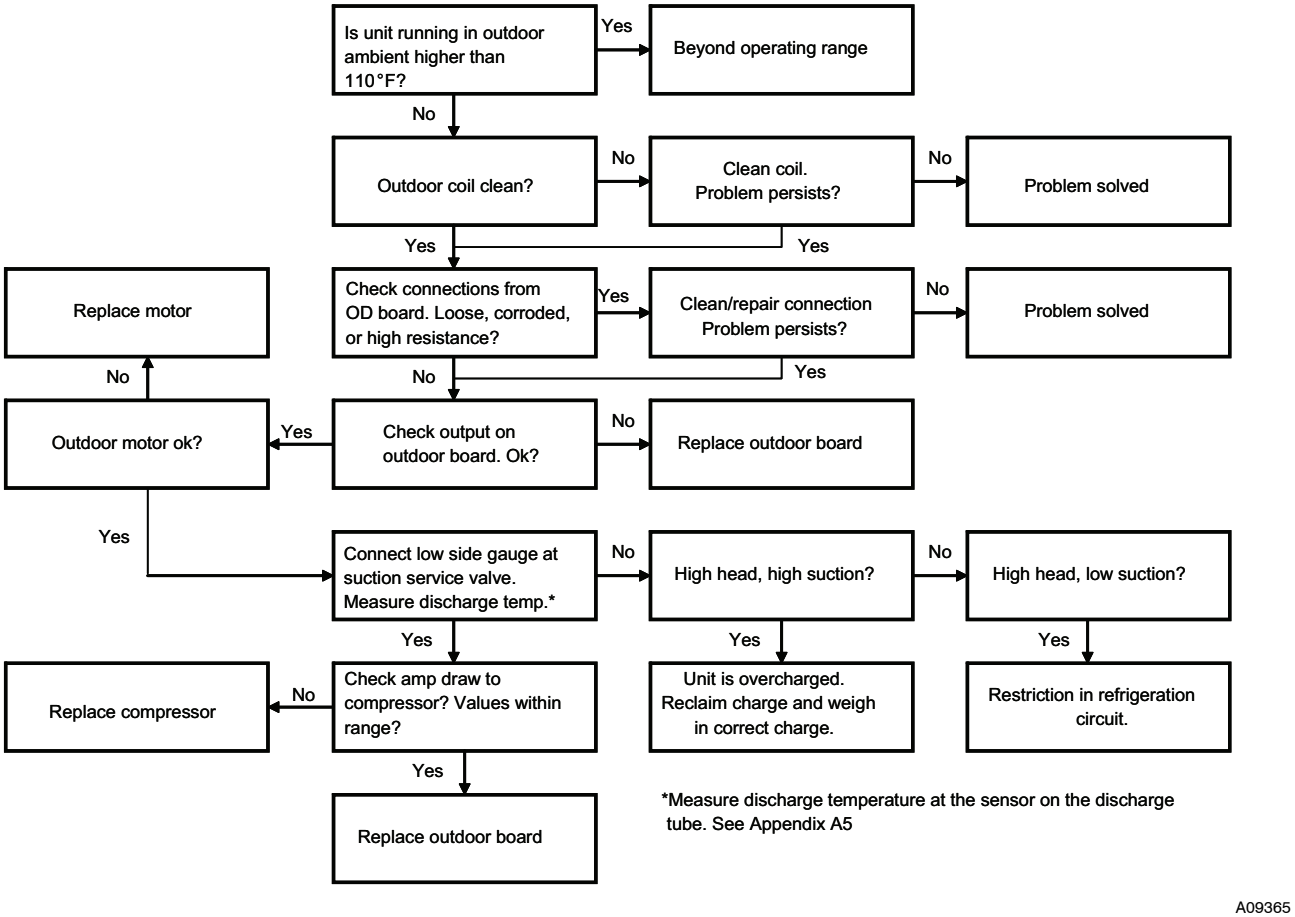

Fig. 33 – Compressor Overcurrent Protection

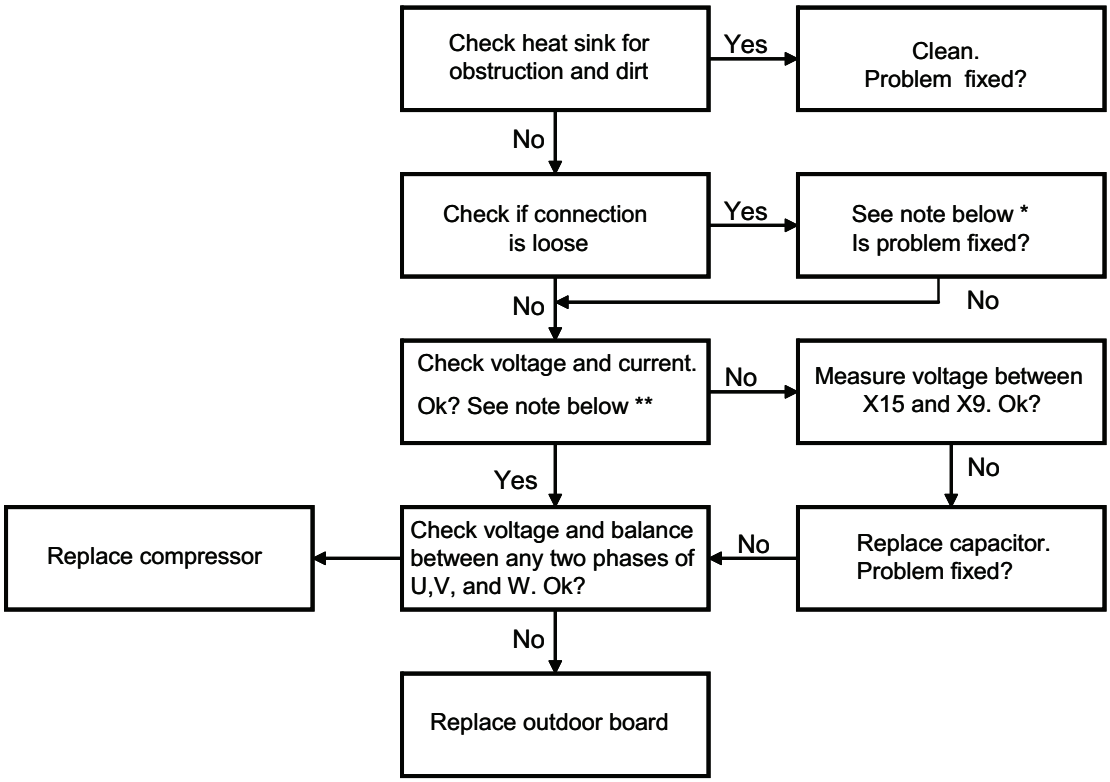

* Remove screws, remove heat sink, remove thermal grease. Apply new thermal grease and reassemble.
** Check if voltage between power module P and N is too low and if current is too high. In normal conditions, voltage between P and N should be about 370V.

A09366

Fig. 34 – IPM Module Protection

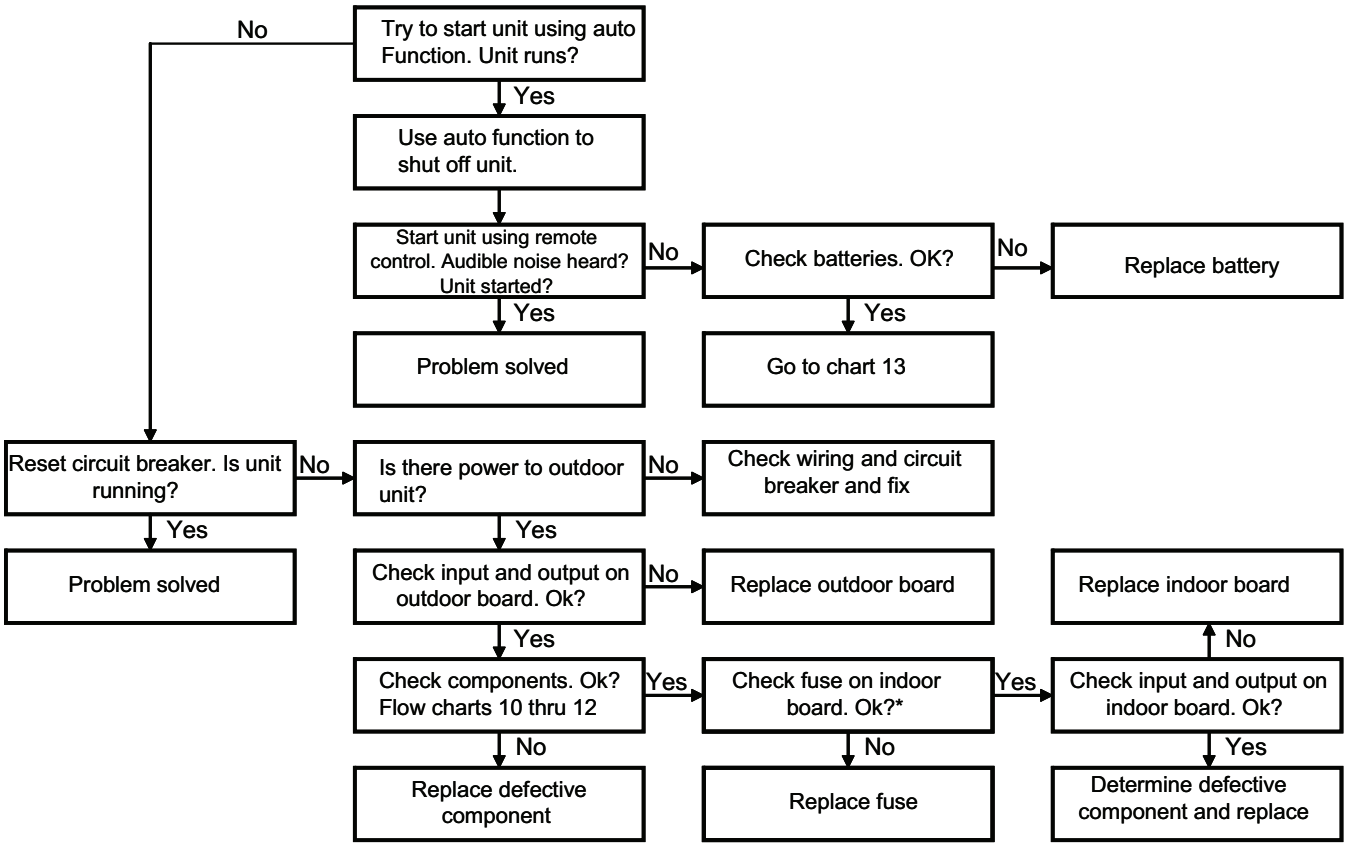

A09367

Fig. 35 – Unit Not Running, No Diagnostic Code

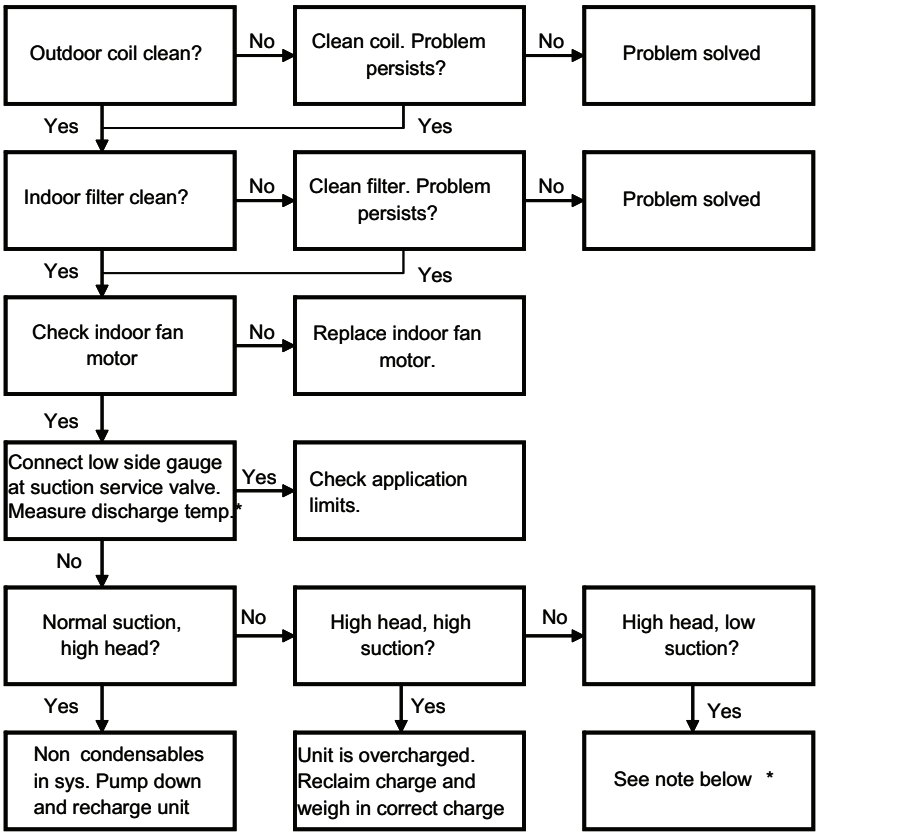

* Restriction in system. Check capillary tube and check for damage to liquid line between indoor and outdoor units.

A09368

Fig. 36 – Unit Not Running Optimally

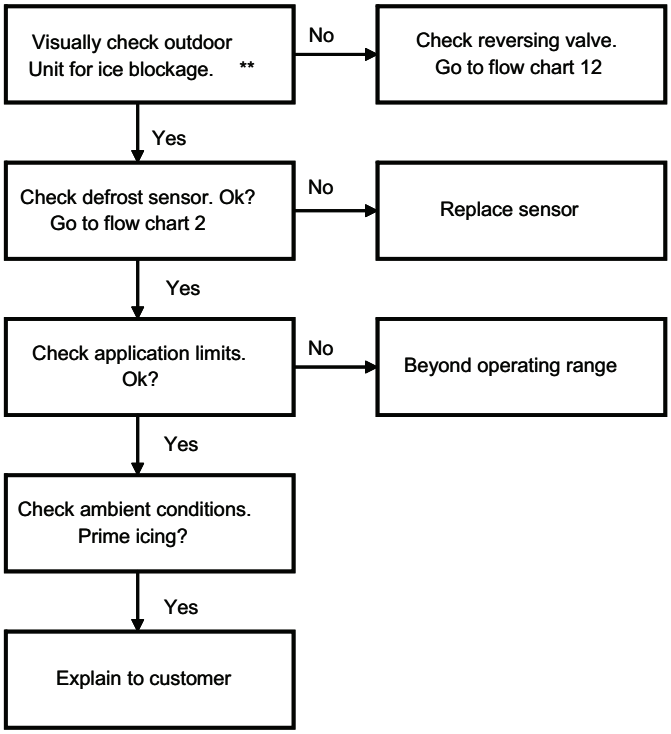

* To supplement flow chart 9
** Check for blockage on outdoor coil and drain pan. Are the holes in drain pans blocked?

A09369

Fig. 37 – Unit Not Running Optimally (HP in Heating*)

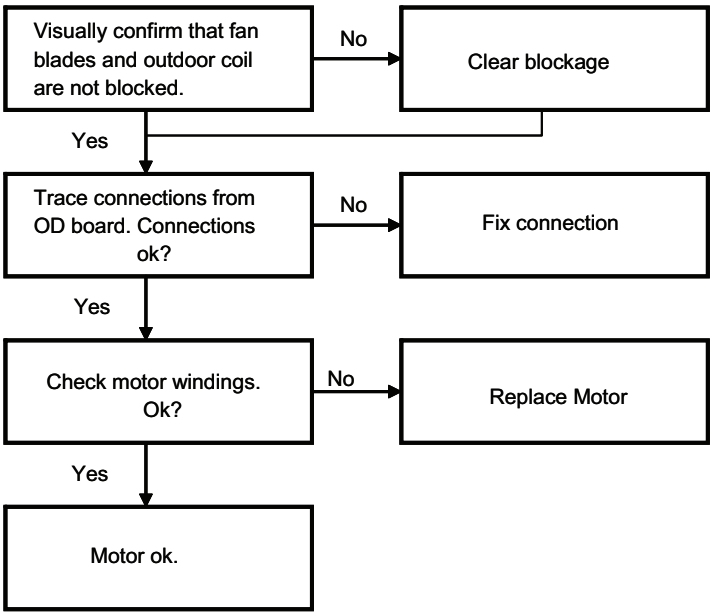

A09370

Fig. 38 – Motors

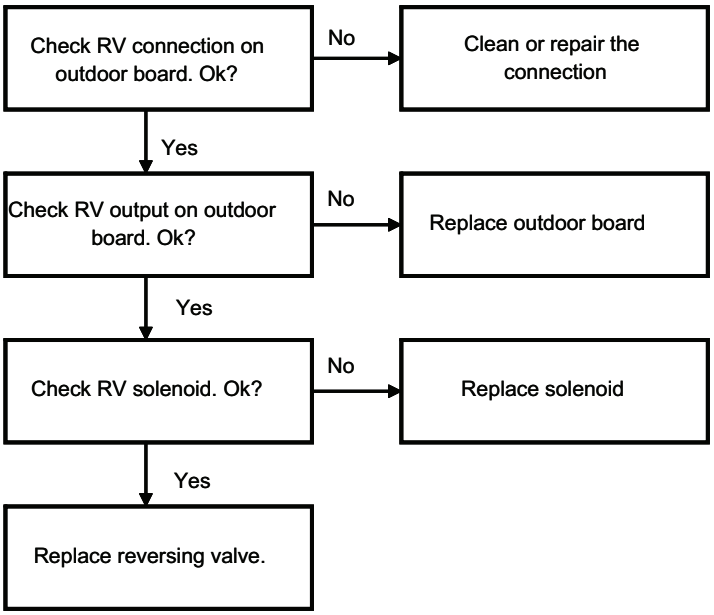

A09371

Fig. 39 – Reversing Valve

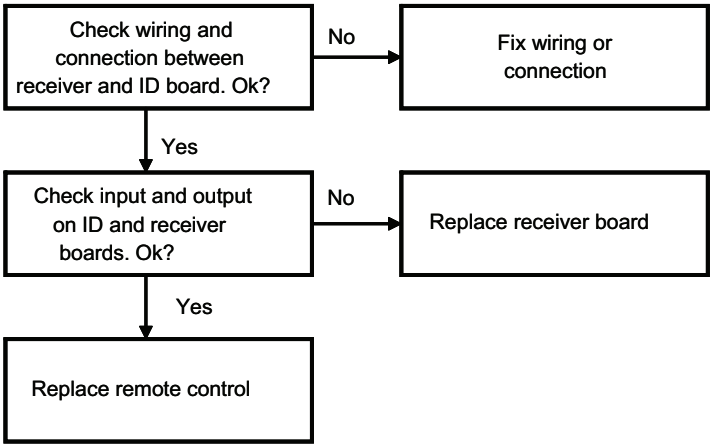

A09372

Fig. 40 – Receiver Board

APPENDIX

APPENDIX TABLE OF CONTENTS

DESCRIPTION	NUMBER
Control Board Input or Output Values	A1
Diagnostic Codes	A2
Characteristics of Temperature Sensors	A3
Pressure –Temperature Chart	A4

A1 - CONTROL BOARDS INPUT OR OUTPUT VALUES

INDOOR BOARD

CONNECTOR		VOLTAGE
INPUT	DATA1	BLACK(24v max) relative to N DC
INPUT	N	BLUE (neutral)
INPUT	AC L1:	BROWN(115v) relative to N AC
OUTPUT	FAN1:	[Pin1□ BLACK (0−115v) Pin2:GREEN(0−115v) Pin3:YELLOW(0−115v) Pin5:BROWN(0−115v) Pin6:RED(0−115v)] relative to Pin4:WHITE
INPUT	X2:	[PIN1:BULE 115v AC relative to PIN2: YELLOW
OUTPUT	X1:	[Pin1□ YELLOW(13±2v AC) relative to Pin2:YELLOW][Pin3:WHITE(8±2v AC) relative to Pin4:WHITE]
OUTPUT	X3:	[Pin1□ BLUE(0−12v) Pin2:PINK(0−12v) Pin3:YELLOW(0−12v) Pin4:ORANGE(0−12v) Pin5:RED(12v)] relative to heat sink (X101) DC
OUTPUT	X9:	Multiple Pins (6 PATH) Any Pin (0−12v DC) relative to heat sink (X101)
OUTPUT	X12:	Multiple Pins (7 PATH)(0−12v DC) relative to heat sink (X101)
INPUT	X9 MK1:	PIN1:BLACK (0−5V DC) relative to PIN2:YELLOW
INPUT	X13:	PIN1:BLACK (0−5V DC) relative to PIN2:YELLOW

OUTDOOR BOARD

CONNECTOR		VOLTAGE
INPUT	X1	BLACK(0−24v DC) relative to X2
INPUT	X2	WHITE(neutral)
INPUT	X3	RED(115v AC) relative to X2
OUTPUT	X5	BROWN(115v) relative to X2
OUTPUT	X4	GROUND
INPUT	CN3	PIN1: WHITE 0−3.3v DC relative to PIN2
INPUT	CN2	PIN1: BLACK 0−3.3v DC relative to PIN2
INPUT	CN1	PIN1: Yellow 0−3.3v DC relative to PIN2
OUTPUT	X8	BLUE (115v AC) relative to X18
OUTPUT	X18	BLUE(neutral)
INPUT	CN4	PIN1: RED 0−3.3v DC relative to PIN2
INPUT	CN7	PIN2:BLACK 12v DC PIN3:BLACK 18v DC all relative to PIN1: BLACK
OUTPUT	CN8	PIN2:BLACK 12v DC PIN3:BLACK 18v DC all relative to PIN1: BLACK
OUTPUT	CN6	U:WHITE 100±50v AC V:ORANGE 100±50v AC relative to W:RED
OUTPUT	U(X11)	U:WHITE 100±50v AC) relative to W:RED
OUTPUT	V(X12)	V:ORANGE 100±50v AC relative to W:RED
OUTPUT	X17	BLUE(neutral)
OUTPUT	X9	BROWN 250±50v AC relative to X15
OUTPUT	X6	BLUE(neutral)
OUTPUT	X15	BLUE(neutral)
OUTPUT	X10	BLUE 250±50v AC relative to X15
OUTPUT	X16	BLUE 250±50v AC relative to X15
OUTPUT	X7	BROWN(neutal)
OUTPUT	X14	RED 0−115v AC relative to X7
OUTPUT	X21	BLACK 0−115v AC relative to X7

A2 - DIAGNOSTIC CODES

Equipment Fault	Code Displayed on Indoor Unit Front Panel	LED Display on Outdoor Unit Board			Possible Cause	Diagnostic Chart Number
		Green LED Number of Flashes	Red LED Number of Flashes	Yellow LED Number of Flashes		
Freeze Protection, Indoor Coil	E2		4	3	Low Refrigerant Charge, Blocked Indoor Air Flow, or Dirty Air Filter	1
High Compressor Discharge Temperature	E4			7	Low Refrigerant Charge, or Blocked Capillary	2
Low Voltage Protection	E5			5	Low Voltage	NR
Communication Error	E6	0			Wiring Error, or Communication Failure	3
Indoor Air Temperature Thermistor	F1				Bad Connection, or Sensor Failure	4
Indoor Coil Temperature Thermistor	F2				Bad Connection, or Sensor Failure	4
Outdoor Air Temperature Thermistor	F3		6		Bad Connection, or Sensor Failure	4
Outdoor Coil Temperature Thermistor	F4		5		Bad Connection, or Sensor Failure	4
Compressor Discharge Line Thermistor	F5		7		Bad Connection, or Sensor Failure	4
High Condensing Temperature	H3			8	High Ambient Temperature, or Loss of Condenser Airflow	5
Compressor Over Current Protection	H4			6	High Ambient Temperature, or Loss of Condenser Airflow	6
IPM Module Protection	H5			4	Loss of Cooling to Heat Sink, High Ambient, Low Voltage, or Bad Connections	7

A3 - CHARACTERISTICS OF TEMPERATURE SENSORS

Temperature °F (°C)	Indoor		Outdoor		
	Return Air	Coil	Coil	OD Air	Comp. Discharge
10 (–12.2)	92220	123000	123000	92220	306200
50 (10.0)	29900	39870	39870	29900	98000
90 (32.2)	11090	14790	14790	11090	36380
130 (54.4)	4625	6167	6167	4625	15170
190 (87.8)	1497	1996	1996	1497	4904
230 (110.0)	758	1010	1010	758	2498

A4 - PRESSURE - TEMPERATURE CHART

Cooling

Ambient Temp. °F	9K		12K	
	Suction Pressure	Discharge Temp.	Suction Pressure	Discharge Temp.
82	115 – 125	96 – 98	125 – 135	102 – 104
95	130 – 140	108 – 110	140 – 150	114 – 116
125	170 – 180	134 – 136	165 – 175	132 – 134

Heating

Ambient Temp. °F	9K		12K	
	Suction Pressure	Discharge Temp.	Suction Pressure	Discharge Temp.
47	100 – 110	124 – 126	105 –115	124 – 126
65	165 – 175	138 – 140	170 – 180	138 – 140

Copyright 2009 Carrier Corp. • 7310 W. Morris St. • Indianapolis, IN 46231 Printed in U.S.A. Edition Date: 06/09 **Catalog No.38−40GX−1SM**

Manufacturer reserves the right to change, at any time, specifications and designs without notice and without obligations.

Replaces: New