40MVC009 with 38MVC0009
Comfort™ Series High Wall Duct–Free Split System
Cooling Only with Puron® Refrigerant

Carrier®
Turn to the Experts.℠

Submittal Data

Job Data:_____ Location:_____

Buyer:_____ Buyer P.O.#_____ Carrier # _____

Unit Number:_____ Model Number: _____

Performance Data Certified By: _____ Date: _____

eez
Worry-FREE. Hassle-FREE. Duct-FREE.™

Puron
the environmentally sound refrigerant

FEATURES

- 13 SEER
- Wireless remote standard
- Low voltage controls
- 35 VDC indoor fan motor
- User selectable fan speeds (auto, low med., high)
- Indoor unit is powered from the outdoor unit
- Auto restart
- Diagnostics
- Dehumidification mode
- Turbo Mode
- Sleep mode
- Auto swing
- Timer
- Cleanable filters
- Limited Warranty: 1-year on all parts/5-years on compressor

Indoor Unit - 40MVC / Outdoor Unit - 38MVC
(Unless otherwise indicated, data applies to both indoor and outdoor models)

SYSTEM SIZE 009
REFRIGERANT R-410A
PERFORMANCE
Nominal Capacity 9,000
SEER 13
Airflow (Low/Med/High) . . . . . 192 / 260 / 325
Performance at actual conditions: Attached ☐ Not Attached ☐
SOUND PRESSURE dBA
Indoor (Low/Med/High) . . . . . 28 / 36 / 42
Outdoor 54
SOUND POWER dBA
Indoor (Low/Med/High) . . . . . 39 / 47 / 53
Outdoor 65

ELECTRICAL
System Voltage 115V
MCA (outdoor) 12
MOCP (outdoor) 20
Fan Motor (Indoor) (FLA) 1.1
Motor Watts 20
CONTROLS
Control Remote . . . . . Wireless
Control Voltage . . . . . Low Voltage
Interconnecting (indoor to outdoor) Wiring (0-50 ft.) . . . . . 18 AWG
Interconnecting (indoor to outdoor) Wiring (50-65 ft.) . . . . . 16 AWG
REFRIGERANT LINES (Insulate both lines)
Mixed Phase Line (in.) OD 1/4
Vapor Line (in.) OD 3/8
Metering/Control Device . . . . . Capillary tube in outdoor unit

Condensate Pump:	Required ☐	Not Required ☐
Low Ambient Controls:	Required ☐	Not Required ☐
Crankcase Heater:	Required ☐	Not Required ☐
Wind Baffle:	Required ☐	Not Required ☐

Optional:

Compressor extended warranty 6-10 years:	Required ☐	Not Required ☐
All parts & labor 2-5 years:	Required ☐	Not Required ☐
All parts & labor 2-5 years + Compressor 6-10 years:	Required ☐	Not Required ☐

UNIT DIMENSIONS – INDOOR MODEL

Model Size	W in. (mm)	H in. (mm)	D in. (mm)	Operating Weight lb (kg)
9K	32.09 (815)	11.02 (280)	7.68 (195)	16 (7)

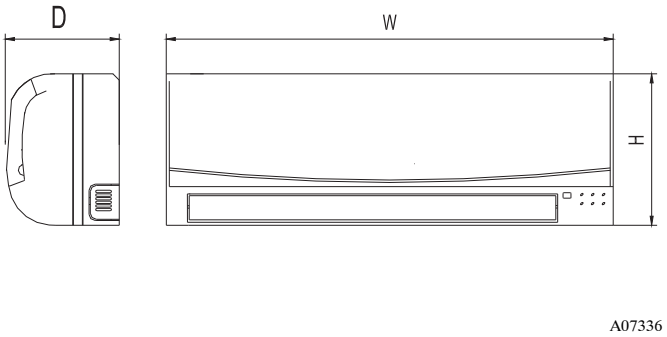

Fig. 1 – 40MVC Dimensions

UNIT CLEARANCES – INDOOR MODEL

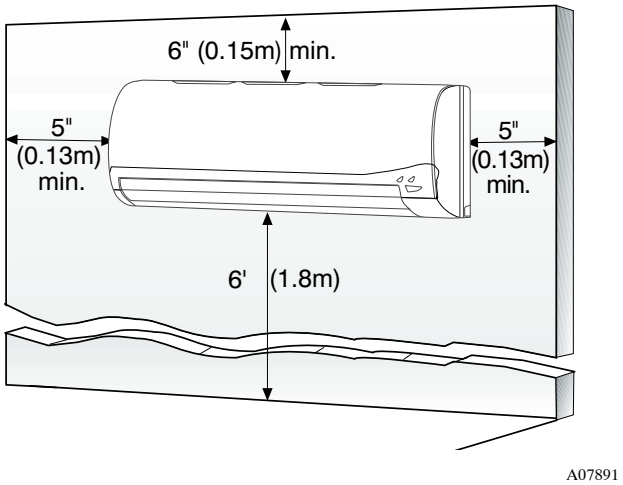

Fig. 2 – 40MVC Clearances

UNIT DIMENSIONS – OUTDOOR MODEL

Model Size	W in. (mm)	H in. (mm)	L1 in. (mm)	L2 in. (mm)	L3 in. (mm)	Weight lb (kg)
9K	30.71 (780)	21.26 (540)	21.61 (549)	11.81 (300)	10.87 (276)	70.4 (32)

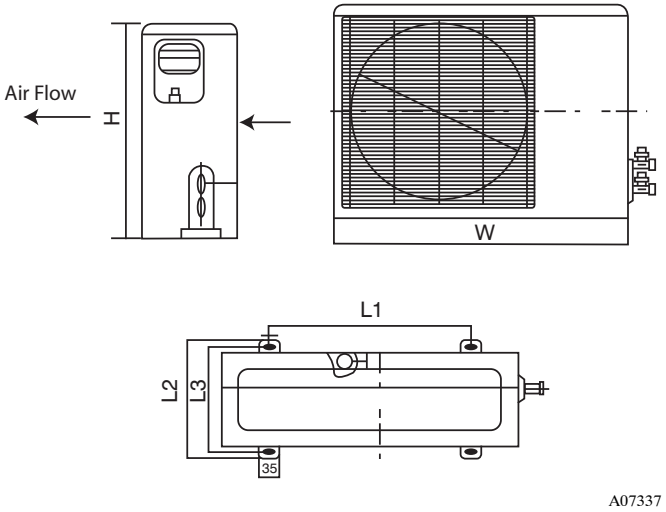

Fig. 3 – 38MVC Dimensions

UNIT CLEARANCES – OUTDOOR MODEL

UNIT	9k in. (mm)
A	24 (610)
B	24 (610)
C	24 (610)
D	4 (102)
E	12 (305)

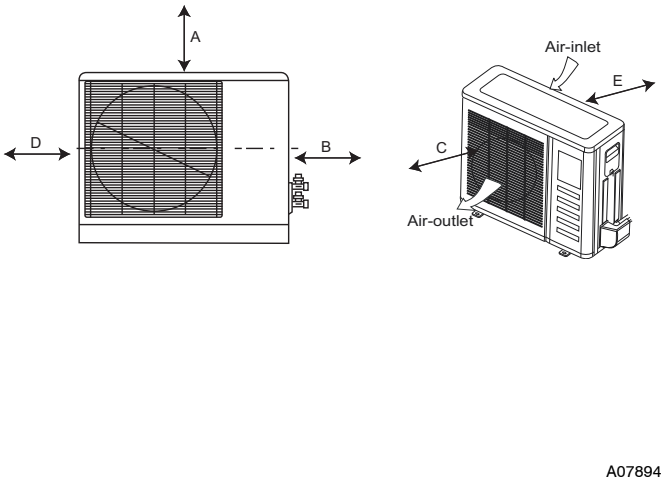

Fig. 4 – 38MVC Clearances

Copyright 2007 Carrier Corp. • 7310 W. Morris St. • Indianapolis, IN 46231
Printed in U.S.A. Edition Date: 11/07 **Catalog No: 38–40MVC009–1SB**

Manufacturer reserves the right to change, at any time, specifications and designs without notice and without obligations.
Replaces: NEW