45MUAA
Crossover Air Handler
Sizes 18K - 60K

Installation Instructions

Fig. 1 — Sizes 18K - 60K

NOTES: Read the entire instruction manual before starting the installation. Images are for illustration purposes only. Actual models may differ slightly.

TABLE OF CONTENTS

PAGE
SAFETY CONSIDERATIONS....2
PRODUCT INSTALLATION WARNINGS....9
ACCESSORIES....12
MODEL NUMBERS....12
DIMENSIONS....13
ELECTRICAL DATA....14
INSTALLATION....15
Step 1 - Check Equipment....15
Step 2 - Mount Unit....15
Step 3 - Mount Positions....15
Step 4 - Select Installation Location....16
Step 5 - Preparation and Precaution for Installation....17
WIRING PRECAUTIONS....19
INDOOR UNIT WIRING....20
INSTALLATION GUIDE FOR AHU 115V POWER SUPPLY....21
Dip Switch Definitions....29
Step 6 - Down Flow and Horizontal Right Installations....38
Down Flow and Horizontal Right Steps....38
Step 7 - Refrigerant Piping....43
REFRIGERANT PIPING CONNECTION....45
NOTE ON ADDING REFRIGERANT....46
TEST RUN....46
WIRING DIAGRAM....49
WIRELESS REMOTE CONTROLLER INSTALLATION....51
OPTIONAL WIRED WALL-MOUNTED REMOTE CONTROL INSTALLATION....52
SETTING UP AIRFLOW AND STATIC PRESSURE....52
FAN PERFORMANCE....53
TROUBLESHOOTING....63

Specifications subject to change without notice.

SAFETY CONSIDERATIONS

Installing, starting up, and servicing air- conditioning equipment can be hazardous due to system pressures, electrical components, and equipment location (roofs, elevated structures, etc.).
Only trained, qualified installers and service mechanics should install, start- up, and service this equipment.

Untrained personnel can perform basic maintenance functions such as coil cleaning. All other operations should be performed by trained service personnel only.

When working on the equipment, observe the precautions in the literature and on tags, stickers, and labels attached to the equipment.

Follow all safety codes.Wear safety glasses and work gloves. Keep a quenching cloth and a fire extinguisher nearby when brazing. Use care in handling, rigging, and setting bulky equipment.
Read these instructions thoroughly and follow all warnings or cautions included in the literature and attached to the unit. Consult local building codes and National Electrical Code (NEC) for special requirements.
Recognize safety information.

This is the safety - alert symbol ⚠.

When you see this symbol on the unit and in instructions or manuals, be alert to the potential for personal injury. Understand these signal words: **DANGER**, **WARNING**, and **CAUTION**. These words are used with the safety- alert symbol.

DANGER identifies the most serious hazards which will result in severe personal injury or death.

WARNING signifies hazards which could result in personal injury or death.

CAUTION is used to identify unsafe practices which may result in minor personal injury or product and property damage.

NOTE is used to highlight suggestions which will result in enhanced installation, reliability, or operation.

⚠ WARNING

ELECTRICAL SHOCK HAZARD
Failure to follow this warning could result in personal injury or death.

Before installing, modifying, or servicing system, the main electrical disconnect switch must be in the OFF position. There may be more than 1 disconnect switch. Lock out and tag switch with a suitable warning label.

⚠ WARNING

EXPLOSION HAZARD
Failure to follow this warning could result in death, serious personal injury, and/or property damage.

Never use air or gases containing oxygen for leak testing or operating refrigerant compressors. Pressurized mixtures of air or gases containing oxygen can lead to an explosion.

⚠ CAUTION

EQUIPMENT DAMAGE HAZARD

Failure to follow this caution may result in equipment damage or improper operation.

Do not bury more than 36 in. (914 mm) of refrigerant pipe in the ground. If any section of pipe is buried, there must be a 6 in. (152 mm) vertical rise to the valve connections on the outdoor units. If more than the recommended length is buried, refrigerant may migrate to the cooler buried section during extended periods of system shutdown. This causes refrigerant slugging and could possibly damage the compressor at start-up.

⚠ WARNING

This appliance is not intended for use by persons (including children) with reduced physical, sensory or mental capabilities, or lack of experience and knowledge, unless they have been given supervision or instruction concerning use of the appliance by a person responsible for their safety. Children should be supervised to ensure that they do not play with the appliance.

⚠ WARNING

Only use the specified wire. If the wire is damaged, it must be replaced by the manufacturer, its service agent or similarly qualified persons in order to avoid a hazard. The product must be properly grounded at the time of installation, or electric shock may occur.

For all electrical work, follow all local and national wiring standards, regulations, and the Installation Manual. Connect the cables tightly, and clamp them securely to prevent external forces from damaging the terminal. Improper electrical connections can overheat and cause fire, and may also cause shock. All electrical connections must be made according to the Electrical Connection Diagram located on the panels of the indoor and outdoor units.

All wiring must be properly arranged to ensure that the control board cover can close properly. If the control board cover is not closed properly, it can lead to corrosion and cause the connection points on the terminal to heat up, catch fire, or cause electrical shock.

Disconnection must be incorporated in the fixed wiring in accordance with NEC, CSA and Local Codes. **Do not** share the electrical outlet with other appliances. Improper or insufficient power supply can cause fire or electric shock.

If connecting power to fixed wiring, an all-pole disconnection device which has at least 3mm clearances in all poles, and have a leakage current that may exceed 10mA, the residual current device (RCD) having a rated residual operating current not exceeding 30mA, and disconnection must be incorporated in the fixed wiring in accordance with NEC, CSA and Local Codes.

⚠ WARNING

Turn off the air conditioner and disconnect the power before performing any installation or repairing. Failure to do so can cause electric shock.

Installation must be performed by an authorized dealer or specialist. Defective installation can cause water leakage, electrical shock, or fire. Installation must be performed according to the installation instructions.

Improper installation can cause water leakage, electrical shock, or fire. Contact an authorized service technician for repair or maintenance of this unit. This appliance shall be installed in accordance with national wiring regulations.

Only use the included accessories, parts, and specified parts for installation. Using non-standard parts can cause water leakage, electrical shock, fire, and can cause the unit to fail.

Install the unit in a firm location that can support the unit's weight. If the chosen location cannot support the unit's weight, or the installation is not done properly, the unit may drop and cause serious injury and damage. Install drainage piping according to the instructions in this manual. Improper drainage may cause water damage to your home and property. For units that have an auxiliary electric heater, do not install the unit within 3 feet (1 meter) of any combustible materials.

If combustible gas accumulates around the unit, it may cause fire.

Do not turn on the power until all work has been completed.

When moving or relocating the air conditioner, consult experienced service technicians for disconnection and re-installation of the unit.

Read the information for details in "indoor unit installation" and "outdoor unit installation" sections.

NOTE: The air conditioner's circuit board (PCB) is designed with a fuse to provide overcurrent protection. The specifications of the fuse are printed on the circuit board, for example: T3.15AL/250VAC, T5AL/250VAC, T3.15A/250VAC, T5A/250VAC, T20A/250VAC, T30A/250VAC,etc.

NOTE: Only a blast-proof ceramic fuse can be used.

⚠ WARNING

FOR FLAMMABLE REFRIGERANTS

Do not use means to accelerate the defrosting process or to clean, other than those recommended by the manufacturer.

The appliance shall be stored in a room without continuously operating ignition sources (for example: open flames, an operating gas appliance or an operating electric heater).

Do not pierce or burn. Be aware that refrigerants may not contain an odor.

⚠ WARNING

PERSONAL INJURY AND PROPERTY DAMAGE HAZARD

For continued performance, reliability, and safety, the only approved accessories and replacement parts are those specified by the equipment manufacturer. The use of non-manufacturer approved parts and accessories could invalidate the equipment limited warranty and result in a fire risk, equipment malfunction, and failure.

Review the manufacturer's instructions and replacement parts catalogs available from your equipment supplier.

Table 1 — Symbols displayed on the indoor unit or outdoor unit

	WARNING	This symbol shows that this appliance used a flammable refrigerant. If the refrigerant is leaked and exposed to an external ignition source, there is a risk of fire.
	CAUTION	This symbol shows that the operation manual should be read carefully.
	CAUTION	This symbol shows that a service personnel should be handling this equipment with reference to the installation manual.
	CAUTION	
	CAUTION	This symbol shows that information is available such as the operating manual or installation manual.

WARNING - RISK OF FIRE DUE TO FLAMMABLE REFRIGERANT USED. FOLLOW HANDLING INSTRUCTIONS CAREFULLY IN COMPLIANCE WITH NATIONAL REGULATIONS.

R-454B Refrigerant Safety Group **A2L** R-454B

FCC

This device complies with part 15 of the FCC Rules. Operation is subject to the following two conditions: (1) This device may not cause harmful interference, and (2) this device must accept any interference received, including interference that may cause undesired operation.

For Class B Digital Device

NOTE: This equipment has been tested and found to comply with the limits for a Class B digital device, pursuant to part 15 of the FCC Rules. These limits are designed to provide reasonable protection against harmful interference in a residential installation. This equipment generates, uses and can radiate radio frequency energy and, if not installed and used in accordance with the instructions may cause harmful interference to radio communications. However, there is no guarantee that interference will not occur in a particular installation. If this equipment does cause harmful interference to radio or television reception, which can be determined by turning the equipment off and on, the user is encouraged to try t o correct the interference by one or more of the following measures:

- Reorient or relocate the receiving antenna
- Increase the distance between the equipment and the receiver
- Connect the equipment into an outlet on a circuit different from that to which the receiver is connected.

Consult the dealer or an experienced radio/TV technician for assistance.

MODIFICATION: Any changes or modifications not expressly approved by the grantee of this device could void the user's authority to operate this device.

Table 2 — A (min)

		HO, RELEASE HEIGHT FT (M)					
MC or Mrel Refrigerant Charge Amount pounds (kilograms)	Mc or Mrel (lbs (kgs)	≤ 7.2 (2.2)	7.5 (2.3)	7.9 (2.4)	8.5 (2.6)	9.2 (2.8)	9.8 (3.0)
	≤ 3.91 (1.776)	12 (1.10)					
	4.0 (1.8)	60 (5.53)	57 (5.29)	55 (5.07)	50 (4.68)	47 (4.34)	44 (4.05)
	4.4 (2.0)	66 (6.14)	63 (5.88)	61 (5.63)	56 (5.2)	52 (4.83)	48 (4.5)
	4.9 (2.2)	73 (6.76)	70 (6.46)	67 (6.19)	62 (5.72)	57 (5.31)	53 (4.95)
	5.3 (2.4)	79 (7.37)	76 (7.05)	73 (6.76)	67 (6.24)	62 (5.79)	58 (5.41)
	5.7 (2.6)	86 (7.99)	82 (7.64)	79 (7.32)	73 (6.76)	68 (6.27)	63 (5.86)
	6.2 (2.8)	93 (8.6)	89 (8.23)	85 (7.88)	78 (7.28)	73 (6.76)	68 (6.31)
	6.6 (3.0)	99 (9.21)	95 (8.81)	91 (8.45)	84 (7.8)	78 (7.24)	73 (6.76)
	7.1 (3.2)	106 (9.83)	101 (9.4)	97 (9.01)	90 (8.32)	83 (7.72)	78 (7.21)
	7.5 (3.4)	112 (10.44)	108 (9.99)	103 (9.57)	95 (8.84)	88 (8.2)	82 (7.66)
	7.9 (3.6)	119 (11.06)	114 (10.58)	109 (10.14)	101 (9.36)	94 (8.69)	87 (8.11)
	8.4 (3.8)	126 (11.67)	120 (11.16)	115 (10.7)	106 (9.88)	99 (9.17)	92 (8.56)
	8.8 (4.0)	132 (12.29)	126 (11.75)	121 (11.26)	112 (10.4)	104 (9.65)	97 (9.01)
	9.3 (4.2)	139 (12.9)	133 (12.34)	127 (11.82)	117 (10.91)	109 (10.14)	102 (9.46)
	9.7 (4.4)	145 (13.51)	139 (12.93)	133 (12.39)	123 (11.43)	114 (10.62)	107 (9.91)
	10.1 (4.6)	152 (14.13)	145 (13.51)	139 (12.95)	129 (11.95)	119 (11.1)	112 (10.36)
	10.6 (4.8)	159 (14.74)	152 (14.1)	145 (13.51)	134 (12.47)	125 (11.58)	116 (10.81)
	11 (5.0)	165 (15.36)	158 (14.69)	152 (14.08)	140 (12.99)	130 (12.07)	121 (11.26)
	11.5 (5.2)	172 (15.97)	164 (15.28)	158 (14.64)	145 (13.51)	135 (12.55)	126 (11.71)
	11.9 (5.4)	179 (16.58)	171 (15.86)	164 (15.2)	151 (14.03)	140 (13.03)	131 (12.16)
	12.3 (5.6)	185 (17.2)	177 (16.45)	170 (15.77)	157 (14.55)	145 (13.51)	136 (12.61)
	12.8 (5.8)	192 (17.81)	183 (17.04)	176 (16.33)	162 (15.07)	151 (14)	141 (13.06)
	13.2 (6.0)	198 (18.43)	190 (17.63)	182 (16.89)	168 (15.59)	156 (14.48)	145 (13.51)
	13.7 (6.2)	205 (19.04)	196 (18.21)	188 (17.45)	173 (16.11)	161 (14.96)	150 (13.96)
	14.1 (6.4)	212 (19.66)	202 (18.8)	194 (18.02)	179 (16.63)	166 (15.44)	155 (14.41)
	14.6 (6.6)	218 (20.27)	209 (19.39)	200 (18.58)	185 (17.15)	171 (15.93)	160 (14.86)
	15 (6.8)	225 (20.88)	215 (19.98)	206 (19.14)	190 (17.67)	177 (16.41)	165 (15.32)
	15.4 (7.0)	231 (21.5)	221 (20.56)	212 (19.71)	196 (18.19)	182 (16.89)	170 (15.77)
	15.9 (7.2)	238 (22.11)	228 (21.15)	218 (20.27)	201 (18.71)	187 (17.37)	175 (16.22)

Amin (ft2 (m2))
Mc: Actual refrigerant charge in the system lbs (Kgs)
Mrel: Refrigerant releasable charge lbs (Kgs)
Ho: Release height, measured from duct opening, in ft (m)
Hinst: Height of install, from the bottom of the indoor appliance, measured in ft (m)
Ho≈ Hinst
Warning: Minimum room area of conditioned space is based on releasable charge or total system refrigerant charge.

When the unit detects a refrigerant leak, the minimum airflow of the indoor unit is as follows:

Table 3 — Refrigerant Leak

MODEL	18K	24K	30	36K	48K	60K
Nominal Air Volume	400CFM	400CFM	447CFM	541CFM	706CFM	795CFM

.

1. **Installation** (where refrigerant pipes are allowed)
   Any person who is involved with working on or breaking into a refrigerant circuit should hold a current valid certificate from an industry-accredited assessment authority, which authorizes their competence to handle refrigerants safely in accordance with an industry recognized assessment specification.
   Maintenance and repair requiring the assistance of other skilled personnel shall be carried out under the supervision of the person competent in the use of flammable refrigerants.
   That the installation of pipe-work shall be kept to a minimum.
   That pipe-work shall be protected from physical damage.
   Where refrigerant pipes shall be compliance with national gas regulations.
   That mechanical connections shall be accessible for maintenance purposes.
   Be more careful that foreign matter (oil, water, etc) does not enter the piping.
   Also, when storing the piping, securely seal the opening by pinching, taping, etc.
   All working procedure that affects safety means shall only be carried by competent persons.
   Appliance shall be stored in a well ventilated area where the room size corresponds to the room area as specified for operation.
   Joints shall be tested with detection equipment with a capability of 5 g/year of refrigerant or better, with the equipment in standstill and under operation or under a pressure of at least these standstill or operation conditions after installation. Detachable joints shall NOT be used in the indoor side of the unit (brazed, welded joint could be used). In cases that require mechanical ventilation, ventilation openings shall be kept clear of obstruction.

   LEAK DETECTION SYSTEM installed. Unit must be powered except for service. For the unit with refrigerant sensor, when the refrigerant sensor detects refrigerant leakage, the indoor unit will display a error code and emit a buzzing sound, the compressor of outdoor unit will immediately stop, and the indoor fan will start running. The service life of the refrigerant sensor is 15 years. When the refrigerant sensor malfunctions, the indoor unit will display the error code “FHCC”.
   The refrigerant sensor can not be repaired and can only be replaced by the manufacturer. It shall only be replaced with the sensor specified by the manufacturer.

2. **When a FLAMMABLE REFRIGERANT is used,** the requirements for installation space of appliance and/or ventilation requirements are determined according to

   - the mass charge amount (M) used in the appliance, the installation location, the type of ventilation of the location or of the appliance. piping material, pipe routing, and installation shall include protection from physical damage in operation and service, and be in compliance with national and local codes and standards, such as ASHRAE 15, IAPMO Uniform Mechanical Code, ICC International Mechanical Code, or CSA B52. All field joints shall be accessible for inspection prior to being covered or enclosed.
   that protection devices, piping, and fittings shall be protected as far as possible against adverse environmental affects, for example, the danger of water collecting and freezing in relief pipes or the accumulation of dirt and debris;
   - that piping in refrigeration systems shall be so designed and installed to minimize the likelihood of hydraulic shock damaging the system;
   - that steel pipes and components shall be protected against corrosion with a rustproof coating before applying any insulation;
   - that precautions shall be taken to avoid excessive vibration or pulsation;
   the minimum floor area of the room shall be mentioned in the form of a table or a single figure without reference to a formula; after completion of field piping for split systems, the field pipework shall be pressure tested with an inert gas and then vacuum tested prior to refrigerant charging, according to the following requirements:
   a. The minimum test pressure for the low side of the system shall be the low side design pressure and the minimum test pressure for the high side of the system shall be the high side design pressure, unless the high side of the system cannot be isolated from the low side of the system in which case the entire system shall be pressure tested to the low side design pressure.
   b. The test pressure after removal of pressure source shall be maintained for at least 1 h with no decrease of pressure indicated by the test gauge, with test gauge resolution not exceeding 5% of the test pressure.
   c. During the evacuation test, after achieving a vacuum level specified in the manual or less, the refrigeration system shall be isolated from the vacuum pump and the pressure shall not rise above 1500 microns within 10 min. The vacuum pressure level shall be specified in the manual, and shall be the lessor of 500 microns or the value required for compliance with national and local codes and standards, which may vary between residential, commercial, and industrial buildings.
   - field-made refrigerant joints indoors shall be tightness tested according to the following requirements: The test method shall have a sensitivity of 5 grams per year of refrigerant or better under a pressure of at least 0.25 times the maximum allowable pressure. No leak shall be detected.

3. Qualification of Workers
   Any maintenance, service and repair operations must be required qualification of the working personnel. Every working procedure that affects safety means shall only be carried out by competent persons that joined the training and achieved competence should be documented by a certificate. The training of these procedures is carried out by national training organizations or manufacturers that are accredited to teach the relevant national competency standards that may be set in legislation. All training shall follow the ANNEX HH requirements of UL 60335-2-40 4th Edition.
   Examples for such working procedures are:
   • breaking into the refrigerating circuit;
   • opening of sealed components;
   • opening of ventilated enclosures.

4. Checks to the area
   Prior to beginning work on systems containing flammable refrigerants, safety checks are necessary to ensure that the risk of ignition is minimized. For repair to the refrigerating system, the following precautions shall be complied with prior to conducting work on the system.

5. Work procedure
   Works shall be undertaken under a controlled procedure so as to minimize the risk of a flammable gas or vapor being present while the work is being performed.

6. General work area
   All maintenance staff and others working in the local area shall be instructed on the nature of work being carried out. work in confined spaces shall be avoided.

7. Checking for presence of refrigerant
   The area shall be checked with an appropriate refrigerant detector prior to and during work, to ensure the technician is aware of potentially flammable atmospheres. Ensure that the leak detection equipment being used is suitable for use with flammable refrigerants, i.e. no sparking, adequately sealed or intrinsically safe.

8. Presence of fire extinguisher

If any hot work is to be conducted on the refrigeration equipment or any associated parts, appropriate fire extinguishing equipment shall be available to hand. Have a dry power or CO2 fire extinguisher adjacent to the charging area.

9. No ignition sources

No person carrying out work in relation to a REFRIGERATING SYSTEM which involves exposing any pipe work shall use any sources of ignition in such a manner that it may lead to the risk of fire or explosion. All possible ignition sources, including cigarette smoking, should be kept sufficiently far away from the site of installation, repairing, removing and disposal, during which refrigerant can possibly be released to the surrounding space. Prior to work taking place, the area around the equipment is to be surveyed to make sure that there are no flammable hazards or ignition risks. "No Smoking" signs shall be displayed.

10. Ventilated area

Ensure that the area is in the open or that it adequately ventilated before breaking into the system or conducting any hot work. A degree of ventilation shall continue during the period that the work is carried out. The ventilation should safely disperse any released refrigerant and preferably expel it externally into the atmosphere.

11. Checks to the refrigeration equipment

Where electrical components are being changed, they shall be fit for the purpose and to the correct specification. At all times the manufacturer's maintenance and service guidelines shall be followed. If in doubt consult the manufacturer's technical department for assistance. The following checks shall be applied to installations using FLAMMABLE REFRIGERANTS:

a. the actual refrigerant charge is in accordance with the room size within which the refrigerant containing parts are installed;
b. the ventilation machinery and outlets are operating adequately and are not obstructed;
c. if an indirect refrigerating circuit is being used, the secondary circuits shall be checked for the presence of refrigerant; marking to the equipment continues to be visible and legible, marking and signs that are illegible shall be corrected;
d. refrigeration pipe or components are installed in a position where they are unlikely to be exposed to any substance which may corrode refrigerant containing components, unless the components are constructed of materials which are inherently resistant to being corroded or are suitably protected against being so corroded.

12. Checks to electrical devices

Repair and maintenance to electrical components shall include initial safety checks and component inspection procedures. If a fault exists that could compromise safety, then no electrical supply shall be connected to the circuit until it is satisfactorily dealt with. If the fault cannot be corrected immediately but it is necessary to continue operation, and adequate temporary solution shall be used. This shall be reported to the owner of the equipment so all parties are advised.

Initial safety checks shall include:

- that capacitors are discharged: this shall be done in a safe manner to avoid possibility of sparking
- that there no live electrical components and wiring are exposed while charging,
- recovering or purging the system; that there is continuity of earth bonding.

13. Wiring

Check that wiring will not be subject to wear, corrosion, excessive pressure, vibration, sharp edges or any other adverse environmental affects. The check shall also take into account the affects of aging or continual vibration from sources such as compressors or fans.

14. Detection of flammable refrigerants

Under no circumstances shall potential sources of ignition be used in the searching for or detection of refrigerant leaks. A halide torch (or any other detector using a naked flame) shall not be used. The following leak detection methods are deemed acceptable for refrigerant systems. Electronic leak detectors may be used to detect refrigerant leaks but, in the case of FLAMMABLE REFRIGERANTS, the sensitivity may not be adequate, or may need re-calibration. (Detection equipment shall be calibrated in a refrigerant free area.) Ensure that the detector is not a potential source of ignition and is suitable for the refrigerant used. Leak detection equipment shall be set at a percentage of the LFL of the refrigerant and shall be calibrated to the refrigerant employed, and the appropriate percentage of gas (25% maximum) is confirmed. Leak detection fluids are also suitable for use with most refrigerants but the use of detergents containing chlorine shall be avoided as the chlorine may react with the refrigerant and corrode the copper pipe-work.

NOTE: Examples of leak detection fluids are: bubble method:

If a leak is suspected, all naked flames shall be removed/ extinguished. If a leakage of refrigerant is found which requires brazing, all of the refrigerant shall be recovered from the system, or isolated (by means of shut off valves) in a part of the system remote from the leak. See the following instructions of removal of refrigerant.

15. Removal and Evacuation

When breaking into the refrigerant circuit to make repairs - or for any other purpose conventional procedures shall be used. However, for flammable refrigerants it is important that best practice be followed, since flammability is a consideration.

The following procedure shall be adhered to:

- safely remove refrigerant following local and national regulations;
- evacuate;
- purge the circuit with inert gas;
- evacuate;
- continuously flush or purge with inert gas when using flame to open circuit; and
- open the circuit.

The refrigerant charge shall be recovered into the correct recovery cylinders if venting is not allowed by local and national codes. For appliances containing flammable refrigerants, the system shall be purged with oxygen-free nitrogen to render the appliance safe for flammable refrigerants. This process might need to be repeated several times. Compressed air or oxygen shall not be used for purging refrigerant systems.

For appliances containing flammable refrigerants, refrigerants purging shall be achieved by breaking the vacuum in the system with oxygen-free nitrogen and continuing to fill until the working pressure is achieved, then venting to atmosphere, and finally pulling down to a vacuum (optional for A2L). This process shall be repeated until no refrigerant is within the system (optional for A2L). When the final oxygen-free nitrogen charge is used, the system shall be vented down to atmospheric pressure to enable work to take place. The outlet for the vacuum pump shall not be close to any potential ignition sources, and ventilation shall be available.

16. Charging procedures

In addition to conventional charging procedures, the following requirements shall be followed:

Works shall be undertaken with appropriate tools only (In case of uncertainty, please consult the manufacturer of the tools for use with flammable refrigerants). Ensure that contamination of different refrigerants does not occur when using charging equipment. Hoses or lines shall be as short as possible to minimize the amount of refrigerant contained in them.

Cylinders shall be kept upright.
Ensure that the refrigeration system is earthed prior to charging the system with refrigerant.
Label the system when charging is complete (if not already).
Extreme care shall be taken not to overfill the refrigeration system.
Prior to recharging the system it shall be pressure tested with oxygen free nitrogen (OFN). The system shall be leak tested on completion of charging but prior to commissioning. A follow up leak test shall be carried out prior to leaving the site.

17. Decommissioning

Before carrying out this procedure, it is essential that the technician is completely familiar with the equipment and all its detail. It is recommended good practice that all refrigerants are recovered safely. Prior to the task being carried out, an oil and refrigerant sample shall be taken in case analysis is required prior to re-use of recovered refrigerant. It is essential that electrical power is available before the task is commenced.

a. Become familiar with the equipment and its operation.
b. Isolate system electrically
c. Before attempting the procedure ensure that:
mechanical handling equipment is available, if required, for handling refrigerant cylinders;
all personal protective equipment is available and being used correctly;

- the recovery process is supervised at all times by a competent person;
- recovery equipment and cylinders conform to the appropriate standards.

d. Pump down refrigerant system, if possible.
e. If a vacuum is not possible, make a manifold so that refrigerant can be removed from various parts of the system.
f. Make sure that cylinder is situated on the scales before recovery takes place.
g. Start the recovery machine and operate in accordance with instructions.
h. Do not overfill cylinders (no more than 80% volume liquid charge)
i. Do not exceed the maximum working pressure of the cylinder, even temporarily.
j. When the cylinders have been filled correctly and the process completed, make sure that the cylinders and the equipment are removed from site promptly and all isolation valves on the equipment are closed off.
k. Recovered refrigerant shall not be charged into another refrigeration system unless it has been cleaned and checked.

18. Labeling

Equipment shall be labeled stating that it has been de-commissioned and emptied of refrigerant. The label shall be dated and signed. For appliances containing FLAMMABLE REFRIGERANTS, ensure that there are labels on the equipment stating the equipment contains FLAMMABLE REFRIGERANT.

19. Recovery

When removing refrigerant from a system, either for servicing or decommissioning, it is recommended good practice that all refrigerants are removed safely.When transferring refrigerant into cylinders, ensure that only appropriate refrigerant recovery cylinders are employed. Ensure that the correct number of cylinders for holding the total system charge is available. All cylinders to be used are designated for the recovered refrigerant and labeled for that refrigerant (i. e. special cylinders for the recovery of refrigerant). Cylinders shall be complete with pressure-relief valve and associated shut-o valves in good working order. Empty recovery cylinders are evacuated and, if possible, cooled before recovery occurs.
The recovery equipment shall be in good working order with a set of instructions concerning the equipment that is at hand and shall be suitable for the recovery of the flammable refrigerant. If in doubt, the manufacturer should be consulted. In addition, a set of calibrated weighing scales shall be available and in good working order. Hoses shall be complete with leak-free disconnect couplings and in good condition. The recovered refrigerant shall be processed according to local legislation in the correct recovery cylinder, and the relevant waste transfer note arranged. Do not mix refrigerants in recovery units and especially not in cylinders. If compressors or compressor oils are to be removed, ensure that they have been evacuated to an acceptable level to make certain that flammable refrigerant does not remain within the lubricant. The compressor body shall not be heated by an open flame or other ignition sources to accelerate this process. When oil is drained from a system, it shall be carried out safely.

20. Unventilated areas

For appliances containing more than for any refrigerating circuit, the manual shall include a statement advising that an unventilated area where the appliance using FLAMMABLE REFRIGERANTS is installed shall be so constructed that should any refrigerant leak, it will not stagnate so as to create a fire or explosion hazard. This shall include:
- a warning that if appliances with A2L REFRIGERANTS connected via an air duct system to one or more rooms are installed in a room with an area less than >Amin as determined in Clause GG.2, that room shall be without continuously operating open flames (for example an operating gas appliance) or other POTENTIAL IGNITION SOURCES (for example an operating electric heater, hot surfaces). A flame-producing device may be installed in the same space if the device is provided with an effective flame arrest;
- for appliances using A2L REFRIGERANTS connected via an air duct system to one or more rooms, a warning with the substance of the following: “Auxiliary devices which may be a POTENTIAL IGNITION SOURCE shall not be installed in the duct work. Examples of such POTENTIAL IGNITION SOURCES are hot surfaces with a temperature exceeding X °C and electric switching devices”. NOTE X is the maximum allowable surface temperature as defined in 22.117.
The manufacturer should specify other potential continuously operating sources known to cause ignition of the refrigerant used. The appliance shall be stored so as to prevent mechanical damage from occurring.
- for appliances using A2L refrigerants connected via an air duct system to one or more rooms, a warning that only auxiliary devices approved by the appliance manufacturer or declared suitable with the refrigerant shall be installed in connecting ductwork. The manufacturer shall list in the instructions all approved auxiliary devices by manufacturer and model number for use with the specific appliance, if those devices have a potential to become an ignition source.
- a warning that if appliances connected via an air duct system to one or more rooms with A2L REFRIGERANTS are installed in a room with an area less than 4min as determined in Clause GG.2. or installed in a room with an EFFECTIVE DISPERSAL VOLUME VED less than the minimum as determined by Clause 101.DVN.8, that room shall be without continuously operating open flames (e.g. an operating gas appliance) or other POTENTIAL IGNITION SOURCES (for e.g. an operating electric heater, hot surfaces). A flame-producing device may be installed in the same space if the device is provided with an effective flame arrest.
- for REFRIGERANT DETECTION SYSTEMS, the function and operation and required servicing measures;
- for LIMITED LIFE REFRIGERANT SENSORS Used in REFRIGERANT DETECTION SYSTEMS, the specified end-of-life and replacement instructions;
- REFRIGERANT SENSORS for REFRIGERANT DETECTION SYSTEMS Shall Only be replaced with sensors specified by the appliance manufacture; and instructions to verify actuation of mitigation actions per Annex GG or Annex 101.DVN as applicable.

For appliances using FLAMMABLE REFRIGERANTS with safety features that depend upon the proper function of a leak detection system used for leak mitigation, the instructions and unit markings shall contain the substance of the following: LEAK DETECTION SYSTEM installed. Unit must be powered except for service." If any remote located REFRIGERANT SENSOR is employed to detect leaked refrigerant, such a remote located REFRIGERANT SENSOR shall also apply to this marking or be accompanied by such instructions.

21. Transportation, marking and storage for units that employ flammable refrigerants
    a. General: The following information is provided for units that employ FLAMMABLE REFRIGERANTS.
    b. Transport of equipment containing flammable refrigerants. Attention is drawn to the fact that additional transportation regulations may exist with respect to equipment containing flammable gas. The maximum number of pieces of equipment or the configuration of the equipment permitted to be transported together will be determined by the applicable transport regulations.
    c. Marking of equipment using signs. Signs for similar appliances used in a work area are generally addressed by local regulations and give the minimum requirements for the provision of safety and/or health signs for a work location. All required signs are to be maintained and employers should ensure that employees receive suitable and sufficient instruction and training on the meaning of appropriate safety signs and the actions that need to be taken in connection with these signs. The effectiveness of signs should not be diminished by too many signs being placed together. Any pictograms used should be as simple as possible and contain only essential details.
    d. Disposal of equipment using flammable refrigerants. See national regulations.
    e. Storage of equipment/appliances. The storage of the appliance should be in accordance with the applicable regulations or instructions, whichever is more stringent.

    Storage of packed (unsold) equipment. Storage package protection should be constructed in such a way that mechanical damage to the equipment inside the package will not cause a leak of the REFRIGERANT CHARGE. The maximum number of pieces of equipment permitted to be stored together will be determined by local regulations.

PRODUCT INSTALLATION WARNINGS

- Turn off the air conditioner and disconnect the power before performing any installation or repairing. Failure to do so can cause electric shock.
- Installation must be performed by an authorized dealer or specialist. Defective installation can cause water leakage, electrical shock, or fire.
- Installation must be performed according to the installation instructions.
- Improper installation can cause water leakage, electrical shock, or fire. Contact an authorized service technician for repair or maintenance of this unit.
- This appliance shall be installed in accordance with national wiring regulations.
- Only use the included accessories, parts, and specified parts for installation.
- Using non-standard parts can cause water leakage, electrical shock, fire, and can cause the unit to fail.
- Install the unit in a firm location that can support the unit's weight. If the chosen location cannot support the unit's weight, or the installation is not done properly, the unit may drop and cause serious injury and damage.
- Install drainage piping according to the instructions in this manual. Improper drainage may cause water damage to your home and property.
- For units that have an auxiliary electric heater, do not install the unit within 1 meter (3 feet) of any combustible materials.
- For the units that have a wireless network function, the USB device access, replacement, maintenance operations must be carried out by professional staff.
- Do not install the unit in a location that may be exposed to combustible gas leaks. If combustible gas accumulates around the unit, it may cause fire.
- Do not turn on the power until all work has been completed.
- When moving or relocating the air conditioner, consult experienced service technicians for disconnection and re-installation of the unit.
- How to install the appliance to its support, please read the information for details in "indoor unit installation" and "outdoor unit installation" sections.

TAKE NOTE OF FUSE SPECIFICATIONS

The air conditioner's circuit board (PCB) is designed with a fuse to provide overcurrent protection. The specifications of the fuse are printed on the circuit board, for example: T3.15AL/250VAC, T5AL/250VAC, T3.15A/250VAC, T5A/250VAC, T20A/250VAC, T30A/250VAC,etc. NOTE: Only the blast-proof ceramic fuse can be used.

CLEANING AND MAINTENANCE WARNINGS

- Turn off the device and disconnect the power before cleaning. Failure to do so can cause electrical shock.
- **Do not** clean the air conditioner with excessive amounts of water.
- **Do not** clean the air conditioner with combustible cleaning agents. Combustible cleaning agents can cause fire or deformation.

FLAMMABLE REFRIGERANT USE WARNINGS

1. Installation (Space)

   - That the installation of pipe-work shall be kept to a minimum.
   - That pipe-work shall be protected from physical damage.
   - Where refrigerant pipes shall be compliance with national gas regulations.
   - That mechanical connections shall be accessible for maintenance purposes.
   - In cases that require mechanical ventilation, ventilation openings shall be kept clear of obstruction.
   - When disposing of the product is used, be based on national regulations, properly processed.

2. Servicing

   - Any person who is involved with working on or breaking into a refrigerant circuit should hold a current valid certificate from an industry-accredited assessment authority, which authorizes their competence to handle refrigerants safely in accordance with an industry recognized assessment specification.

3. Maintenance and repair requiring the assistance of other skilled personnel shall be carried out under the supervision of the person competent in the use of flammable refrigerants.
4. Do not use means to accelerate the defrosting process or to clean, other than those recommended by the manufacturer.
5. The appliance shall be stored in a room without continuously operating ignition sources (for example: open flames, an operating gas appliance or an operating electric heater).
6. Be more careful that foreign matter (oil, water, etc) does not enter the piping. Also, when storing the piping, securely seal the opening by pinching, taping, etc.
7. Do not pierce or burn.
8. Be aware that refrigerants may not contain an odor.
9. All working procedure that affects safety means shall only be carried by competent persons.
10. Appliance shall be stored in a well -ventilated area where the room size corresponds to the room area as specific for operation.
11. The appliance shall be stored so as to prevent mechanical damage from occurring.
12. Joints shall be tested with detection equipment with a capability of 5 g/year of refrigerant or better, with the equipment in standstill and under operation or under a pressure of at least these standstill or operation conditions after installation.

NOTE: FUSE SPCIFICATIONS

The air conditioner's circuit board (PCB) may be designed with a fuse to provide overcurrent protection. This fuse must be replaces with identical component. The specifications of the fuse, if equipped, are printed on the circuit board, examples of such are T5A/250VAC and T10A/250VAC.

NOTE: FLUORINATED GASES (NOT APPLICABLE TO THE UNIT USING R290 REFRIGERANT)

This air-conditioning unit contains fluorinated greenhouse gases. For specific information on the type of gas and the amount, please refer to the relevant label on the unit itself or the "Owner's Manual - Product Fiche" in the packaging of the outdoor unit.

Installation, service, maintenance and repair of this unit must be performed by a certified technician. Product un-installation and recycling must be performed by a certified technician. When the unit is checked for leaks, proper record-keeping of all checks is strongly recommended.

The allowed static pressure range of the air conditioner on site is 0-0.80 in.wc.(0-200 Pa). The data below represents the static pressures at full required air flow used for AHRI testing.

Table 4 — Static Pressure Range

MODEL	18K-24K	30K-36K	48K-60K
PRESSURE (After January 1, 2023)	0.0 – 0.8 in.wc.(200 Pa)		

NOTE: The maximum functional total external static pressure can not exceed 0.80 in.wc. or 200 Pa. The airflow reduces significantly beyond 0.80 in.wc. or 200Pa. System design should allow for the increased resistance of filters as they become dirty.

Room Size Restriction

The appliances are connected via an air duct system to one or more rooms, the bottom of the air outlet of the air duct in the room should be at a height.7.3ft/2.2m from the floor. In UL/CSA 60335-2-40, the R454B refrigerant belongs to mildly flammable refrigerants, which will limit the room area of the system service. Similarly, the total amount of refrigerant in the system should be less than or equal to the maximum allowable refrigerant charge, which depends on the room area serviced by the system.

NOTE:

The nouns in this section are explained as follows:

- Mc: The actual refrigerant charge in the system.
- A: the actual room area where the appliance is installed.
- Amin: The required minimum room area.
- Mmax: The allowable maximum refrigerant charge in a room.
- Qmin: The minimum circulation airflow.
- Anvmin The minimum opening area for connected rooms.
- TAmin: The total area of the conditioned space (For appliances serving one or more rooms with an air duct system).
- TA: The total area of the conditioned space connected by air ducts.

Refrigerant Charge and Room Area Limitations

For the purpose of determination of room area (A) when used to calculate the maximum allowable refrigerant charge (mmax) in an unventilated space, the following shall apply.

The room area (A) shall be defined as the room area enclosed by the projection to the floor of the walls, partitions and doors of the space in which the appliance is installed.

Spaces connected by only drop ceilings, ductwork, or similar connections shall not be considered a single space.

For units mounted higher than 6.0ft/1.8m, spaces divided by partition walls which are no higher than 5.3ft/1.6m shall be considered a single space.

For fixed appliances, rooms on the same floor and connected by an open passageway between the spaces can be considered a single room when determining compliance to Amin, if the passageway complies with all of the following.

- It is a permanent opening.
- It extends to the floor.
- It is intended for people to walk through.

For fixed appliances, the area of the adjacent rooms, on the same floor, connected by permanent opening in the walls and/or doors between occupied spaces, including gaps between the wall and the floor, can be considered a single room when determining
compliance to Amin, provided all of the following are met.

- The space shall have appropriate openings according to Sec.2.
- The minimum opening area for natural ventilation Anvmin shall not be less than listed in Table 5.

Table 5 — Opening Area

HEIGHT OF OUTLET, FT (M)	A, FT² (M²)	MC, LB (KG)	MAX, LB (KG)	ANVMIN, FT² (M²)
7.2 (2.2)	53.8 (5)	11.0 (5.0)	5.9 (2.7)	0.48 (0.045)
	64.5 (6)		6.4 (2.9)	0.45 (0.042)
	75.3 (7)		7.0 (3.2)	0.41 (0.038)
	86.1 (8)		7.5 (3.4)	0.38 (0.035)
	96.9 (9)		7.9 (3.6)	0.33 (0.031)
	107.6 (10)		8.4 (3.8)	0.30 (0.028)
	118.4 (11)		8.6 (3.9)	0.26 (0.024)
	129.2 (12)		9.3 (4.2)	0.21 (0.020)
	139.9 (13)		9.5 (4.3)	0.17 (0.016)
	150.7 (14)		9.9 (4.5)	0.14 (0.013)
	161.5 (15)		10.1 (4.6)	0.10 (0.009)
	172.2 (16)		10.6 (4.8)	0.05 (0.005)
	183 (17)		10.8 (4.9)	0.01 (0.001)

NOTE: Take the Mc = 11 lb (5 kg) as an example. For appliances serving one or more rooms with an air duct system, the room area calculation shall be determined based on the total area of the conditioned space (TA) connected by ducts taking into consideration that the circulating airflow distributed to all the rooms by the appliance integral indoor fan will mix and dilute the leaking refrigerant before entering any room.

Opening Conditions for Connected Rooms

When the openings for connected rooms are required, the following conditions shall be applied.

- The area of any openings above 11.81in(300mm) from the floor shall not be considered in determining compliance with Anvmin.
- At least 50% of the required opening area Anvmin shall be below 7.87in(200mm) from the floor.
- The bottom of the lowest openings shall not be higher than the point of release when the unit is installed and not more than 3.98in(100mm) from the floor.
- Openings are permanent openings which cannot be closed.
  - For openings extending to the floor the height shall not be less than 0.79in(20mm) above the surface of the floor covering
- A second higher opening shall be provided. The total size of the second opening shall not be less than 50% of minimum opening area for Anvmin and shall be at least 0.06in(1.5 m) above the floor.

NOTE: The requirement for the second opening can be met by drop ceilings, ventilation ducts, or similar arrangements that provide an airflow path between the connected rooms.

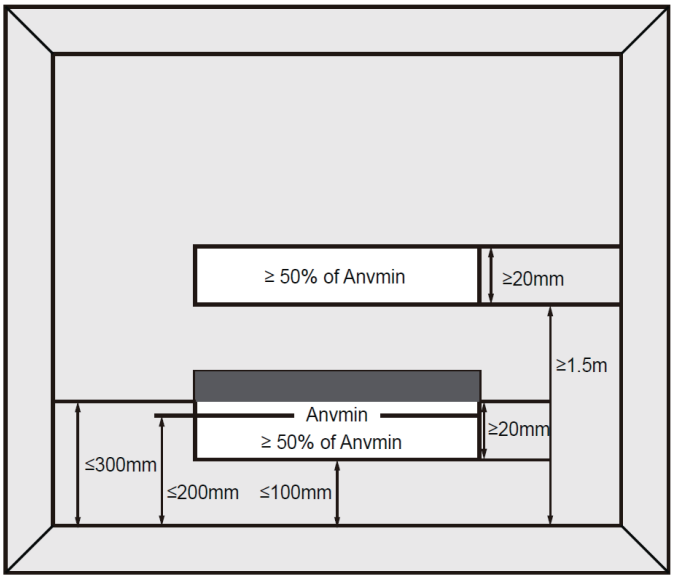

Fig. 2 — AnvMin

- The room into which refrigerant can leak, plus the connected adjacent room(s) shall have a total area of not less than TAmin.
- The room area in which the unit is installed shall be not less than 20%TAmin.

R454B Refrigerant Charge Amount and Minimum Room Area:

The machine you purchased may be one of the types in the table below. The indoor and outdoor units are designed to be used together. Check the unit you purchased. The minimum room area of operating or storage should be as specified in Table 2 on page 5.

Table 6 — Compatible Indoor / Outdoor Units

SIZE	INDOOR UNIT	OUTDOOR UNIT
18K (115/208/230V)	45MUAAQ18XX3	37MURAQ18AA3
24K (115/208/230V)	45MUAAQ24XX3	37MURAQ24AA3
30K (115/208/230V)	45MUAAQ30XX3	37MURAQ30AA3
36K (115/208/230V)	45MUAAQ36XX3	37MURAQ36AA3
48K (115/208/230V)	45MUAAQ48XX3	37MURAQ48AA3
60K (115/208/230V)	45MUAAQ60XX3	37MURAQ60AA3

Table 7 — Compatible Indoor / Outdoor Units

SIZE	INDOOR UNIT	OUTDOOR UNIT
18K (115/208/230V)	45MUAAQ18XX3	37MUHAQ18AA3
24K (115/208/230V)	45MUAAQ24XX3	37MUHAQ24AA3
30K (115/208/230V)	45MUAAQ30XX3	37MUHAQ30AA3
36K (115/208/230V)	45MUAAQ36XX3	37MUHAQ36AA3
48K (115/208/230V)	45MUAAQ48XX3	37MUHAQ48AA3
60K (115/208/230V)	45MUAAQ60XX3	37MUHAQ60AA3

Manufacturer reserves the right to change, at any time, specifications and designs without notice and without obligations.

ACCESSORIES

The system is shipped with the following accessories. Use all of the installation parts and accessories to install the system. Improper installation may result in water leakage, electrical shock and fire, or cause the equipment to fail. Keep the installation manual in a safe place and do not discard any other accessories until the installation has been completed.

Table 8 — Accessories

NAME	SHAPE	QUANTITY
Manual	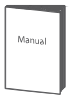	2
Cable ties		8
Insulation Sleeve	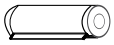	2
Flare Nut		2
Braze to flare adapter	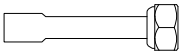	2
Remote Controller		1
Batteries		2
Wired remote controller (purchase separately)		1
Sponge		1
Remote Controller Holder		1
24V Connection Cable to 3rd Party Condenser		1

NOTE: The wired controller functions as an IR receiver for the hand-held remote. If the remote is not used it must be retained with the indoor unit to adjust parameters and for troubleshooting.

Table 9 — Pipe Specification

NAME	MODEL	PIPE SPECIFICATION		REMARK
		LIQUID SIDE	GAS SIDE	
Connecting pipe assembly	18K	Ø3/8in(Ø9.52mm)	Ø3/4in(Ø19mm)	Pipes are not included in the accessories and you need to purchase it separately from the local dealer.
	24K	Ø3/8in(Ø9.52mm)	Ø3/4in(Ø19mm)	
	30K	Ø3/8in(Ø9.52mm)	Ø3/4in(Ø19mm)	
	36K	Ø3/8in(Ø9.52mm)	Ø3/4in(Ø19mm)	
	48K	Ø3/8in(Ø9.52mm)	Ø3/4in(Ø19mm)	
	60K	Ø3/8in(Ø9.52mm)	Ø3/4in(Ø19mm)	

MODEL NUMBERS

Table 10 — Model Numbers

NOMINAL SIZE (KBTU/HR)	MODEL NUMBER
18	45MUAAQ18XX3
24	45MUAAQ24XX3
30	45MUAAQ30XX3
36	45MUAAQ36XX3
48	45MUAAQ48XX3
60	45MUAAQ60XX3

Manufacturer reserves the right to change, at any time, specifications and designs without notice and without obligations.

DIMENSIONS

Table 11 — Dimensions

MODEL (BTU/H) / DIMENSIONS		18K/24K	30K/36K	48K/60K
A	inch	45	49	53
	mm	1143	1245	1346
B	inch	21	21	21
	mm	533	533	533
C	inch	17-1/2	21-1/50	24-1/2
	mm	445	534	622
D	inch	15-3/4	19-5/16	22-27/32
	mm	400	490	580
E	inch	10-1/4	10-1/4	10-1/4
	mm	260	260	260

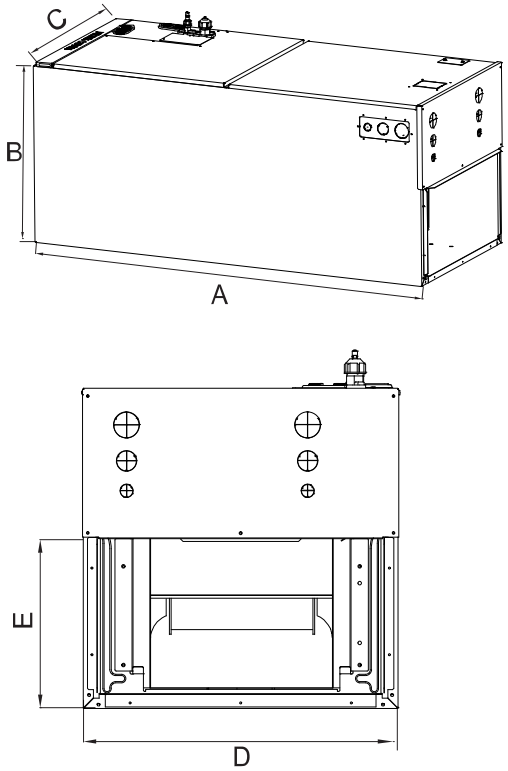

Fig. 3 — Dimensions

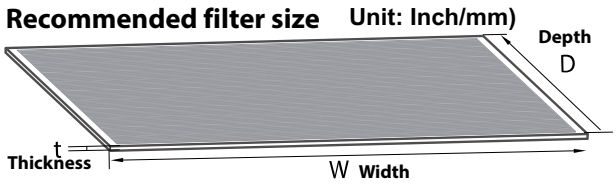

Fig. 4 — Filter

Table 12 — Recommended Filter Sizes

MODEL (BTU/H)	WIDTH		DEPTH		THICKNESS	
	Inch	mm	Inch	mm	Inch	mm
18K-24K	16	406.4	20	508	1	25.4
30K-36K	19-1/2	495.3	20	508	1	25.4
48K-60K	23	584.2	20	508	1	25.4

NOTE: The user needs to purchase a standard filter that meets the requirements of UL900. For questions about the selection of filters, consult the manufacturer.

Manufacturer reserves the right to change, at any time, specifications and designs without notice and without obligations.

ELECTRICAL DATA

Table 13 — Electrical Data

INDOOR UNIT		18K	24K	30K	36K	48K	60K
V-Ph-Hz		115V/208/230-1-60					
Minimum Circuit Ampacity (MCA) 115V	A	5.5	5.5	8	8	14.5	14.5
Minimum Circuit Ampacity (MCA) 208/230V	A	4	4	6	6	11	11
Maximum Overcurrent Protection Ampacity (MOP)	A	15	15	15	15	15	15
Voltage - Phase - Frequency		115V/208/230-1-60					
Max – Min Voltage Range		253-187(208/230V)					

LEGEND
FLA - Full Load Amps
MCA - Minimum Circuit Amps
MOP- Maximum Overcurrent Protection

INSTALLATION

WARNING

Prior to Installation

Before installing the indoor unit, ensure the compatibility with the outdoor unit using the product data as a reference. It is also necessary to confirm the proper application of the equipment and to perform a heat load calculation for proper sizing.

Step 1 - Check Equipment

Unpack the unit and move to the final location. Remove the carton, taking care not to damage the unit. Inspect the equipment for damage prior to installation. File a claim with the shipping company if the shipment is damaged or incomplete. Locate the unit rating plate, which contains the proper installation information. Check the rating plate to be sure the unit matches the job specifications. The indoor unit should be installed in a location that meets the following requirements:

- **Enough room for installation and maintenance**
- **Enough room for the line-set and drainpipe**
- **A structure that can sustain the weight of the indoor unit**
- **The air inlet and outlet are not impeded**
- **There is no direct radiation from heaters**

CAUTION

DO NOT install the unit in the following locations:

- Areas with oil drilling or fracking
- Coastal areas with high salt content in the air
- Areas with caustic gases in the air, such as near hot springs
- Areas with power fluctuations, such as factories
- Enclosed spaces, such as cabinets
- Areas with strong electromagnetic waves
- Areas that store flammable materials or gas
- Rooms with high humidity, such as bathrooms or laundry rooms.

Step 2 - Mount Unit

The unit can stand or lie on the floor, or hang from a ceiling or a wall. Allow space for wiring, piping, and servicing the unit. Follow local codes.

IMPORTANT: When the unit is installed over a finished ceiling and/or living area, building codes may require a field-supplied secondary condensate pan to be installed under the entire unit.

Some localities may allow as an alternative, the running of a separate, secondary condensate line. Consult the local codes for additional restrictions or precautions.

NOTE: Nuisance sweating may occur if the unit is installed in a high humidity environment with low airflow.

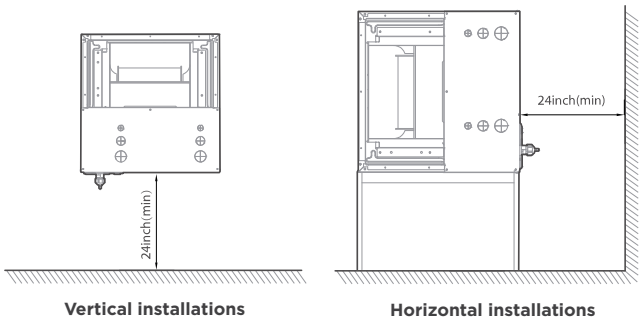

Fig. 5 — Horizontal Installations

Step 3 - Mount Positions

The units can be installed in a vertical (down and up) and horizontal (right and left) configuration.

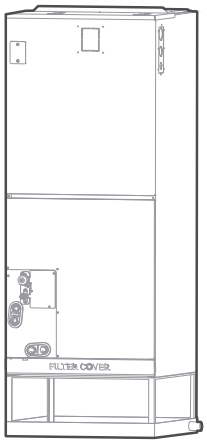

Fig. 6 — Vertical Up Installations

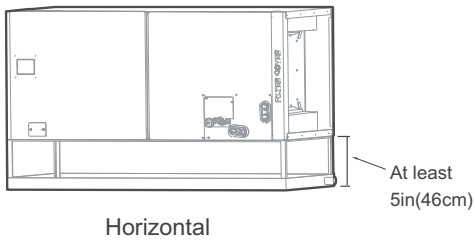

Fig. 7 — Horizontal Installations

NOTE: For horizontal installation, a secondary drain pan (not supplied) must be installed.

Step 4 - Select Installation Location

⚠ CAUTION

Install the indoor and outdoor units, cables and wires at least 3-1/5ft (1m) from televisions or radios to prevent static or image distortion. Depending on the appliances, a 3-1/5ft (1m) distance may not be sufficient.

The indoor unit must be electrically grounded per national and local electrical code.

Select the installation location of indoor units

WARNING
DO NOT INSTALL IN THE FOLLOWING LOCATIONS

DO NOT install the indoor unit in a moist environment. Excessive moisture can corrode the equipment, electrical components, and cause electrical shorts.

Areas with strong electromagnetic waves.

Coastal areas with high salt content in the air.

Areas with oil drilling or fracking.

Areas where flammable materials or gas are stored.

Areas where there may be detergent or other corrosive gases in the air, such as bathrooms or laundry rooms.

Areas where the air inlet and outlet may be obstructed.

Danger of explosion. Keep flammable materials and vapors, such as gasoline, away from the air handler.

WARNING
UNIT MUST BE INSTALLED IN A LOCATION THAT MEETS THE FOLLOWING REQUIREMENTS:

☑ Securely install the indoor unit on a structure that can support its weight. If the structure is too weak, the unit may fall and cause personal injury, unit and property damage, or even death.

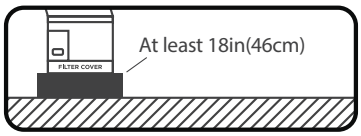

☑ Place the air handler so that heating elements are at least 18 inches (46 cm) above the floor for a garage installation. Failure to follow these instructions can result in death, explosion, or fire.

☑ Enough room for installation and maintenance.

☑ Enough room for the connecting pipe and drainpipe.

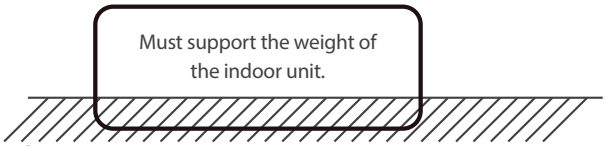

☑ The structure that the equipment is suspended from must support the weight of the indoor unit.

⚠ WARNING

There must be an airtight seal between the bottom of the air handler and the return air plenum. Use fiberglass sealing strips, foil duct tape, caulking, or equivalent sealing method between the plenum and the air handler cabinet to ensure a tight seal. Return air must not be drawn from a room where this air handler or any gas-fueled appliance (i.e., water heater), or carbon monoxide-producing device (i.e., wood fireplace) is installed.

Step 5 - Preparation and Precaution for Installation

WARNING

There must be an airtight seal between the bottom of the air handler and the return air plenum. Use fiberglass sealing strips, foil duct tape, caulking, or equivalent sealing method between the plenum and the air handler cabinet to ensure a tight seal. Return air must not be drawn from a room where this air handler or any gas-fueled appliance (i.e., water heater), or carbon monoxide-producing device (i.e., wood fireplace) is installed.

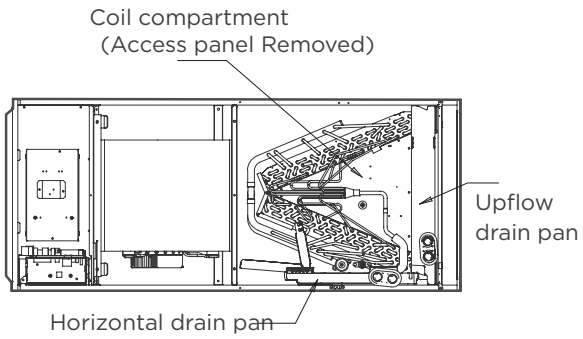

Fig. 8 — Unit (side view)

WARNING

Apply sealant around the places where the wires, refrigerant pipes and condensate pipes enter the cabinet.

Use duct tape or flexible sealant to seal closed any space around the holes where the drain lines exit the cabinet. Warm air must not be allowed to enter through any gaps or holes in the cabinet.

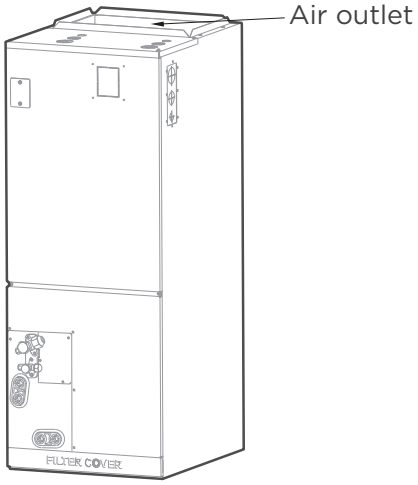

Fig. 9 — Air Outlet

NOTE: Remove all accessories and packing in the air outlet prior to installation.

Recommended Distances Between the Indoor Unit

The distance between the mounted indoor unit should meet the specifications illustrated in Figure 10.

Horizontal Installation

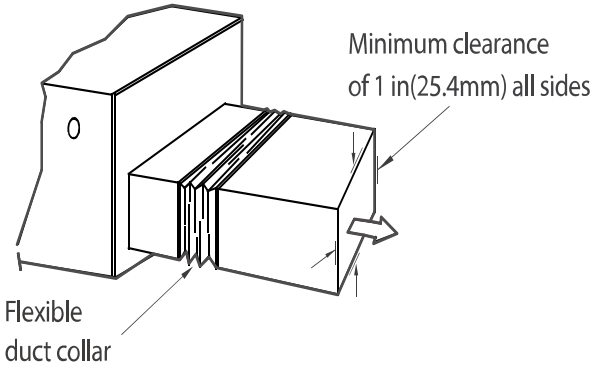

Fig. 10 — Horizontal Installation

Vertical Installation

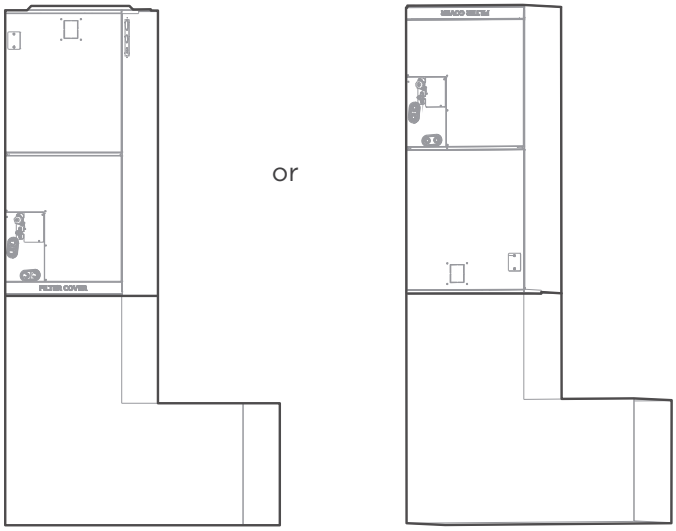

Fig. 11 — Vertical Installation

Securing instructions: When installed vertically (upward or downward), the lower end of the air outlet needs to be connected to the L-shaped metal air duct and fastened by screws.

If return air is to be ducted, install the duct flush with the floor. Set the unit on the floor over opening. All return air must pass through the coil.

NOTE: The user needs to purchase a standard filter that meets the requirements of UL900. For questions about the selection of filters, consult the manufacturer.

Indoor Unit Parts Installation Site

NOTE FOR DUCT CONNECTIONS:

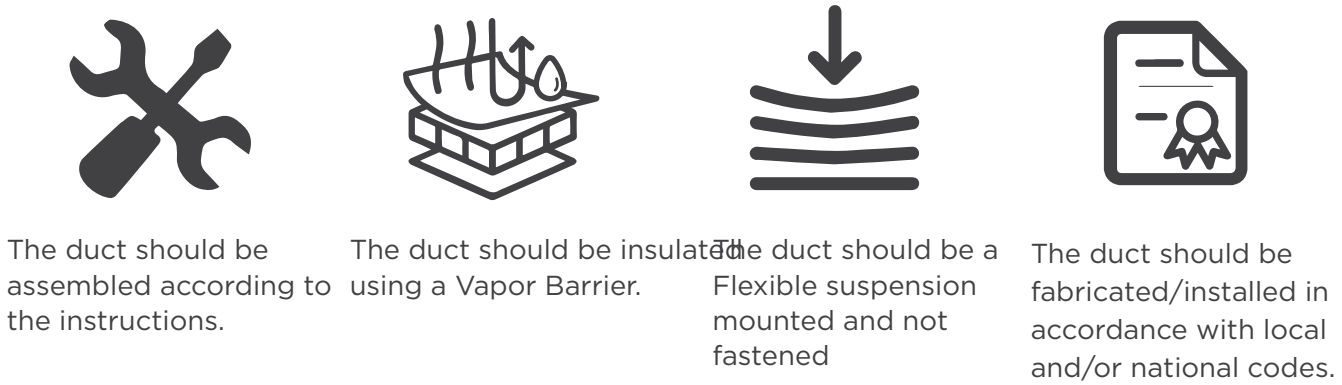

Fig. 12 — Duct Connections

Additional Requirements

Air supply and return may be handled in one of several ways best suited to the installation (see Table 11 on page 13 for dimensions for duct inlet and outlet connections). The vast majority of problems encountered with combination cooling systems can be linked to improperly designed or installed duct systems. It is therefore highly important to the success of an installation that the duct system be properly designed and installed. Use flexible duct collars to minimize the transmission of vibration/noise into the conditioned space. Where return air duct is short, or where sound could potentially to be a problem, sound absorbing liner should be used inside the duct.

Duct must be insulated where it runs through an unconditioned space during the cooling season. The use of a vapor barrier is recommended to prevent absorption of moisture from the surrounding air into the insulation. The supply air duct connection should be properly sized by use of a transition to match unit opening.

All ducts should be suspended using flexible hangers and never fastened directly to the structure.This unit is not designed for non-ducted (freeblow) applications. Duct work should be fabricated and installed in accordance with local and/or national codes.

CAUTION

A field-fabricated secondary drain pan, with a drain pipe to the outside of the building, is required in all installations over a finished living space or in any area that may be damaged by overflow from the main drain pan. In some localities, local codes may require a secondary drain pan for any horizontal installation.

Installation Direction Selection

The units can be installed in a vertical (down and up) and horizontal (right and left) configuration.

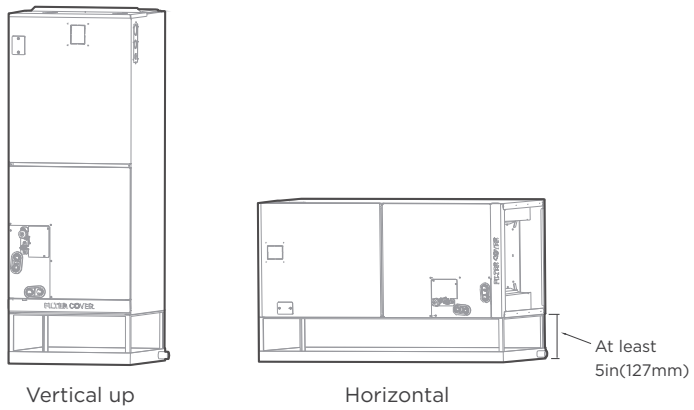

Fig. 13 — Vertical or Horizontal

NOTE: For horizontal installation a secondary drain pan (not supplied) must be installed. At least 5” of clearance is required between the bottom of the air handler and secondary pan for proper drainage to occur

Airflow Direction for Different Installation Directions

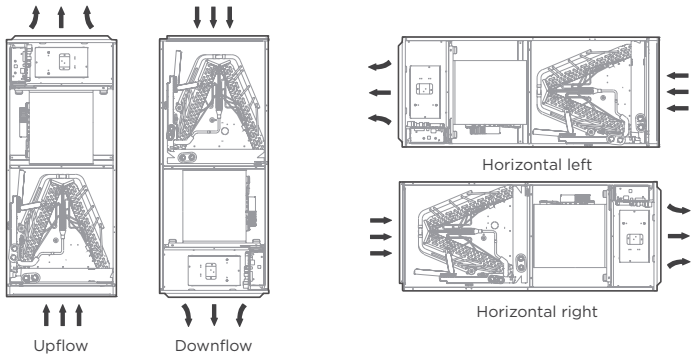

Fig. 14 — Installation Directions

NOTE: Vertical up and horizontal left installation does not need to change the direction of evaporator.

WIRING PRECAUTIONS

WARNING

Before performing any electrical work, read these warnings.

- All wiring must comply with local and national electrical codes, regulations and must be installed by a licensed electrician.
- All electrical connections must be made according to the Electrical Connection Diagram located on the panels of the indoor and outdoor units.
- If there is a serious safety issue with the power supply, stop work immediately. Explain your reasoning to the client, and refuse to install the unit until the safety issue is properly resolved.
- Power voltage should be within 90-110% of rated voltage. Insufficient power supply can cause malfunction, electrical shock, or fire. Installation of an external surge suppressor at the outdoor disconnect is recommended.
- If connecting power to fixed wiring, a switch or circuit breaker that disconnects all poles and has a contact separation of at least 1/8in (3mm) must be incorporated in the fixed wiring. The qualified technician must use an approved circuit breaker or switch.
- Only connect the unit to an individual branch circuit. Do not connect another appliance to that Circuit.
- Make sure to properly ground the air conditioner.
- Every wire must be firmly connected. Loose wiring can cause the terminal to overheat, resulting in product malfunction and possible fire.
- Do not let wires touch or rest against refrigerant tubing, the compressor, or any moving parts within the unit.
- To avoid getting an electric shock, never touch the electrical components soon after the power supply has been turned off. After turning off the power, always wait 10 minutes or more before you touch the electrical components.
- Ensure that you do not cross your electrical wiring with your signal wiring. This may cause distortion, interference or possibly damage to circuit boards.
- No other equipment should be connected to the same power circuit.
- Connect the outdoor wires before connecting the indoor wires.

WARNING

Before performing any electrical or wiring work, turn off the main power to the system.

WIRING OVERVIEW

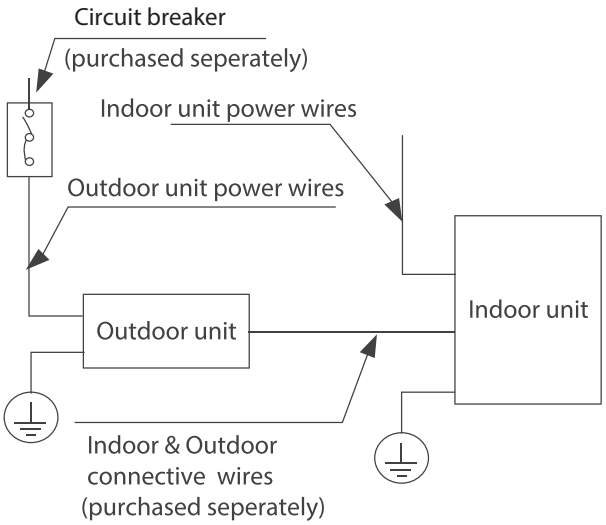

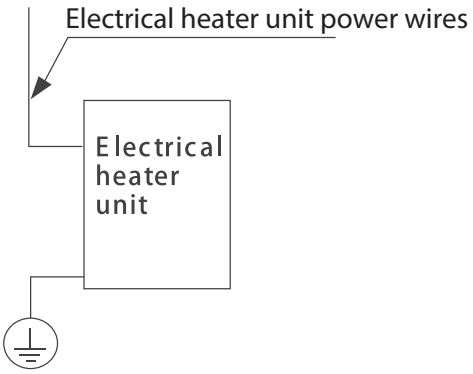

NOTE: The diagrams are for explanation purpose only. Your machine may be slightly different. The actual diagram shall prevail.

INDOOR UNIT WIRING

⚠ CAUTION

While connecting the wires, please strictly follow the wiring diagram.
The refrigerant circuit can become very hot. Keep the interconnection cable away from the copper tube.

Prepare the cable for connection.

1. Using wire strippers, strip the insulating jacket from both ends of the signal cable to reveal about 5.9in(150mm) of the wire.
2. Strip the insulation from the ends of the wires.

Open the front panel of the indoor unit.

Using a screwdriver, remove the cover of the electric control box on your indoor unit.

Connect the wires to the terminals.

1. Thread the power cable and the signal cable through the wire outlet.
2. Match the wire colors/labels with the labels on the terminal block. Firmly screw the wires of each wire to its corresponding terminal. Refer to the Serial Number and Wiring Diagram located on the cover of the electric control box. Terminal block wiring. When using 208V or 230V,connect L1 and L2. **When using 115V, connect L1 and L2 (L2 is used as N)**.

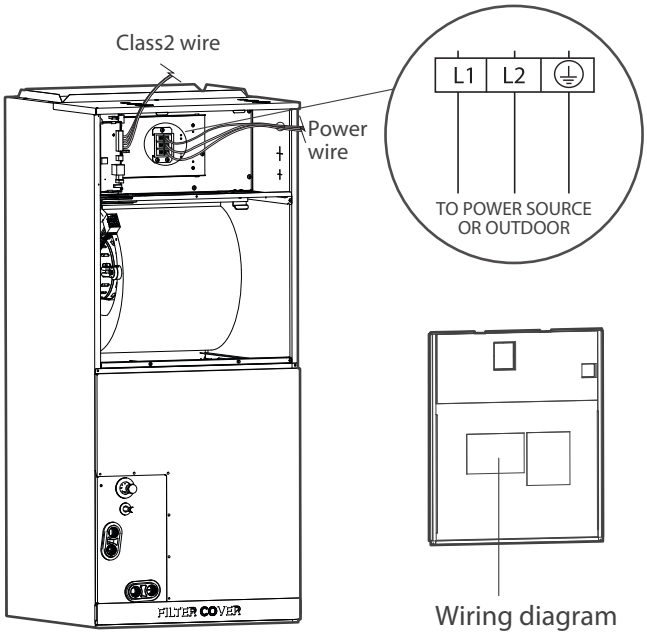

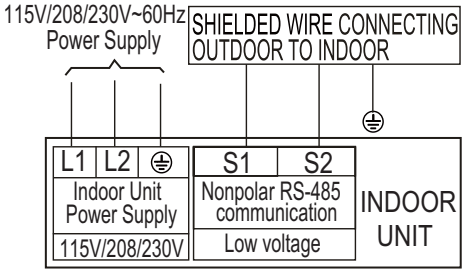

Fig. 15 — Indoor Wiring

⚠ WARNING

Isolate the power supply leads and communication leads by the strain relief and keep the power supply leads away from the communication leads.

3. Clamp down the cable with the cable clamp. The cable must not be loose or pull on the u-lugs.
4. Reattach the electric box cover.
5. Clamp down the cable with the cable clamp. The cable must not be loose or pull on the u-lugs.
6. Reattach the electric box cover.

⚠ CAUTION

While connecting the wires, please strictly follow the wiring diagram.
The refrigerant circuit can become very hot. Keep the interconnection cable away from the copper tube.
The holes on cover of the electronic control box must be threaded through with armored wires.

⚠ WARNING

The motor has two pairs of plugs. The red color indicates that the motor is connected to the plug when powered by 115V, and the white color indicates that the motor is connected to the plug when powered by 230V (default is connected to the white pair of plugs). When using a 208-230V power supply, this part remains unchanged; When using a 115V power supply, the motor wiring requires the use of a 115V motor pair plug. At this time, the white motor pair plug needs to be removed and the red motor pair plug needs to be connected. When the motor is plugged in red, the internal power supply must be 115V. If it is powered by a 208-230V power supply, the motor will be damaged.

INSTALLATION GUIDE FOR AHU 115V POWER SUPPLY

NOTE: Electric Heat cannot be used with 115 volt applications. All control wiring methods referring to electric heat as well as airflow settings for electric heat in this manual should not be considered for 115 volt applications.

Default setting: 230V connector (white) is connected to the fan motor wire.

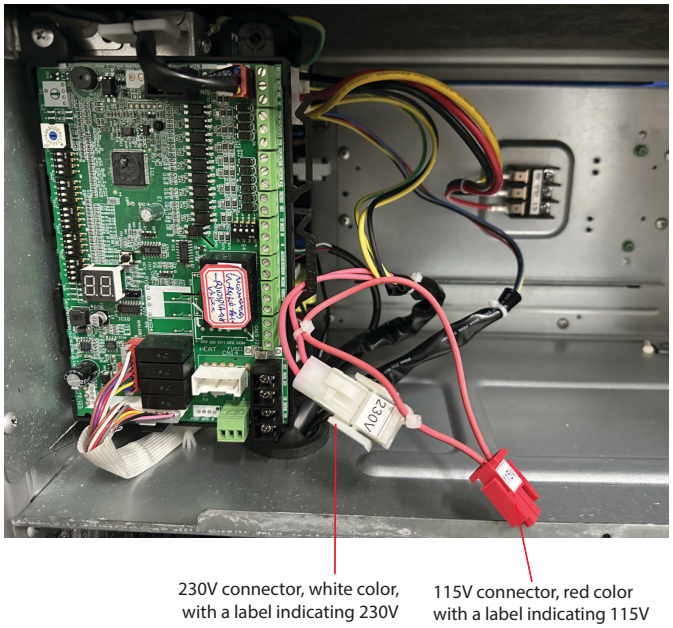

Fig. 16 — Factory Default Connection

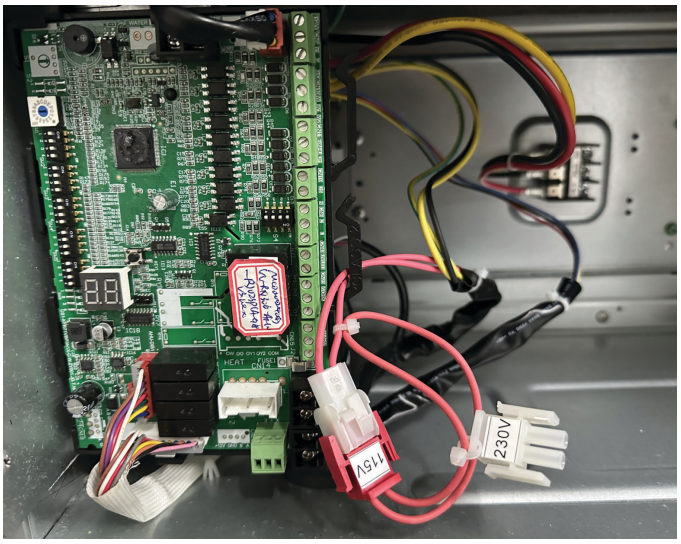

Fig. 17 — Step 1

1. Unplug the 230V connector (white), connect the 115V connector (red) to the fan motor wire.

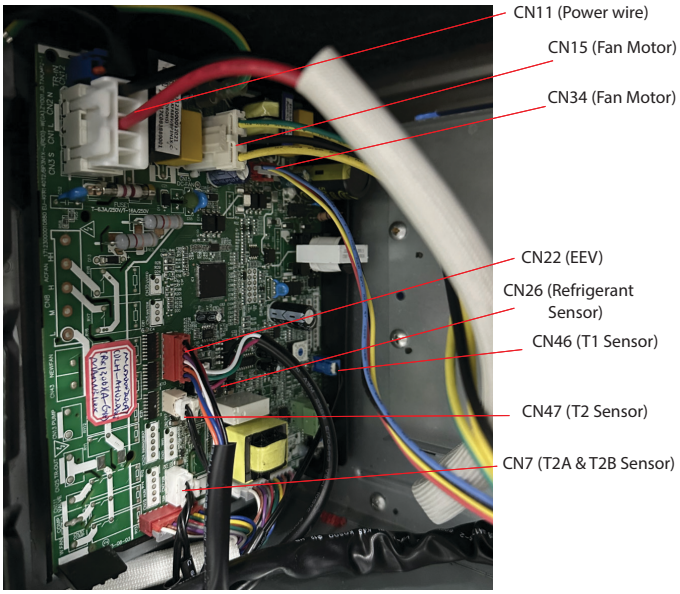

Fig. 18 — Step 2

2. Unplug the connectors for temperature sensors, refrigerant sensor, fan motor, EEV and power wire from the main control board.

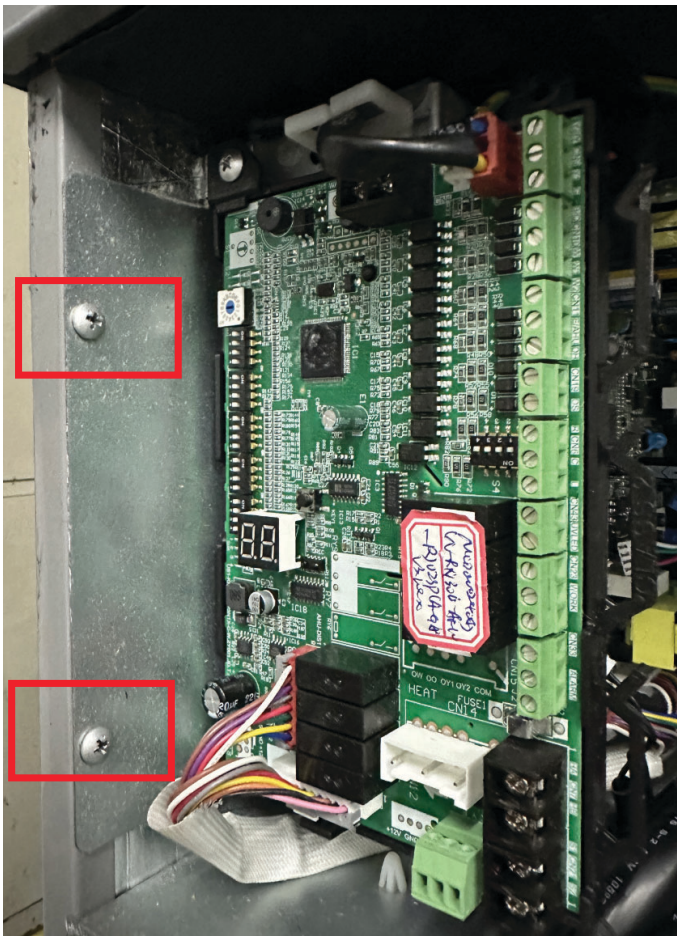

Fig. 19 — Step 3

3. Remove the two screws used to secure the control box, pull the control box out from the cabinet.

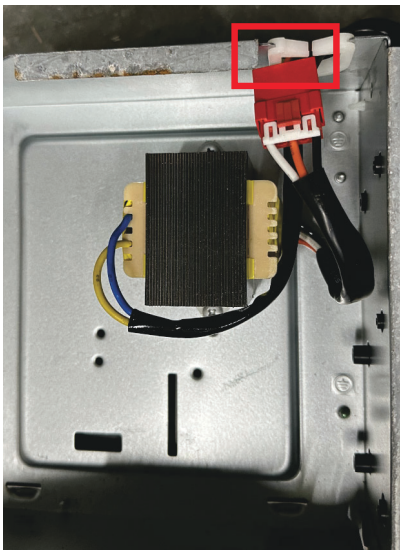

24V transformer

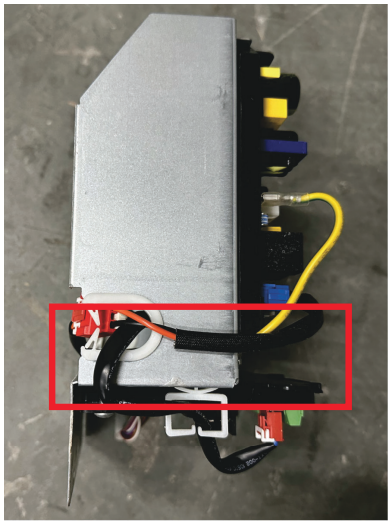

Connection wire with red connector

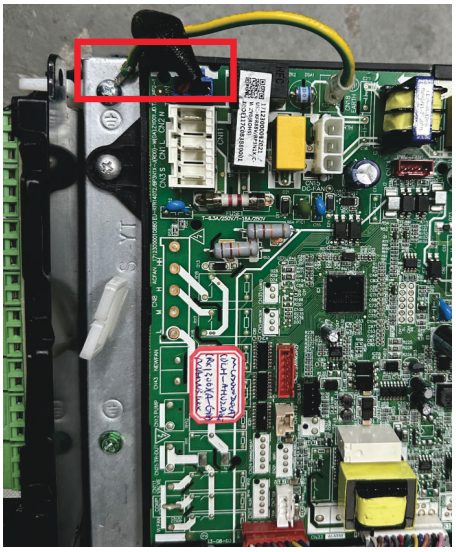

CN12 port on main control board

Fig. 20 — Step 4

4. A connection wire is used to connect the 24V transformer to the main control board.
   a. The default connection wire used for 230V power has a red connector connecting to the 24V transformer.
   b. Unplug this connection wire from the 24V transformer and the CN12 port on main control board.

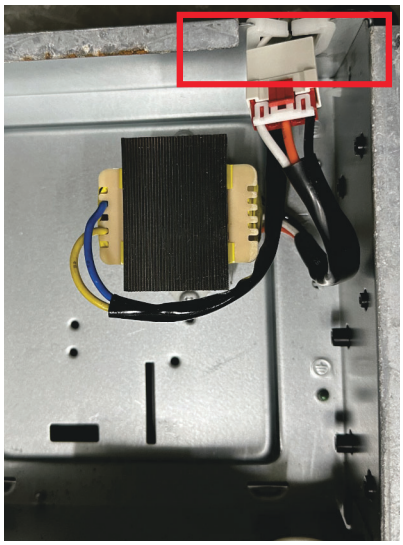

24V transformer

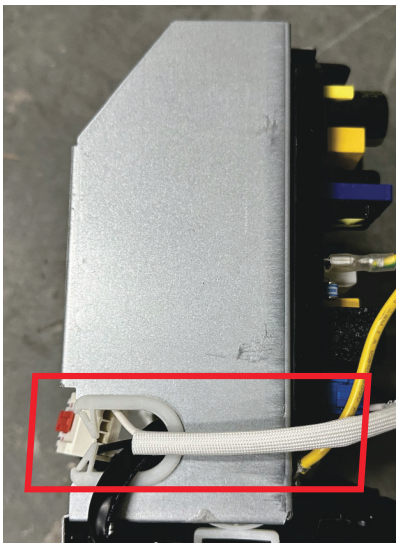

Connection wire with white connector

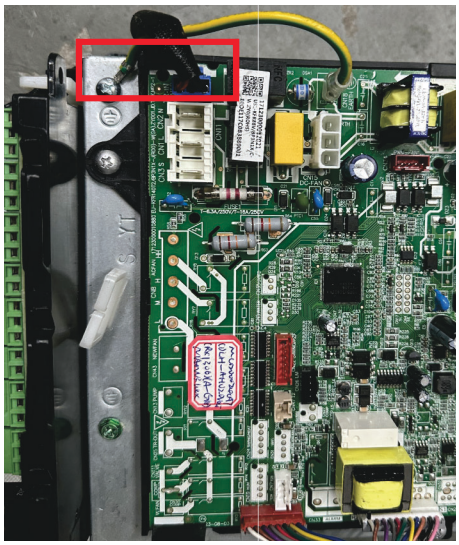

CN12 port on main control board

Fig. 21 — Step 5

5. Remove the connection wire used for 115V power, connecting it to the 24V transformer and main control board.
   a. The white connector on the connection wire needs to connect with the 24V transformer, plug in the other connector to the CN12 on the main control board.
   b. Reinstall the control box to the cabinet, plug in all the connectors that were disconnected in step 2.

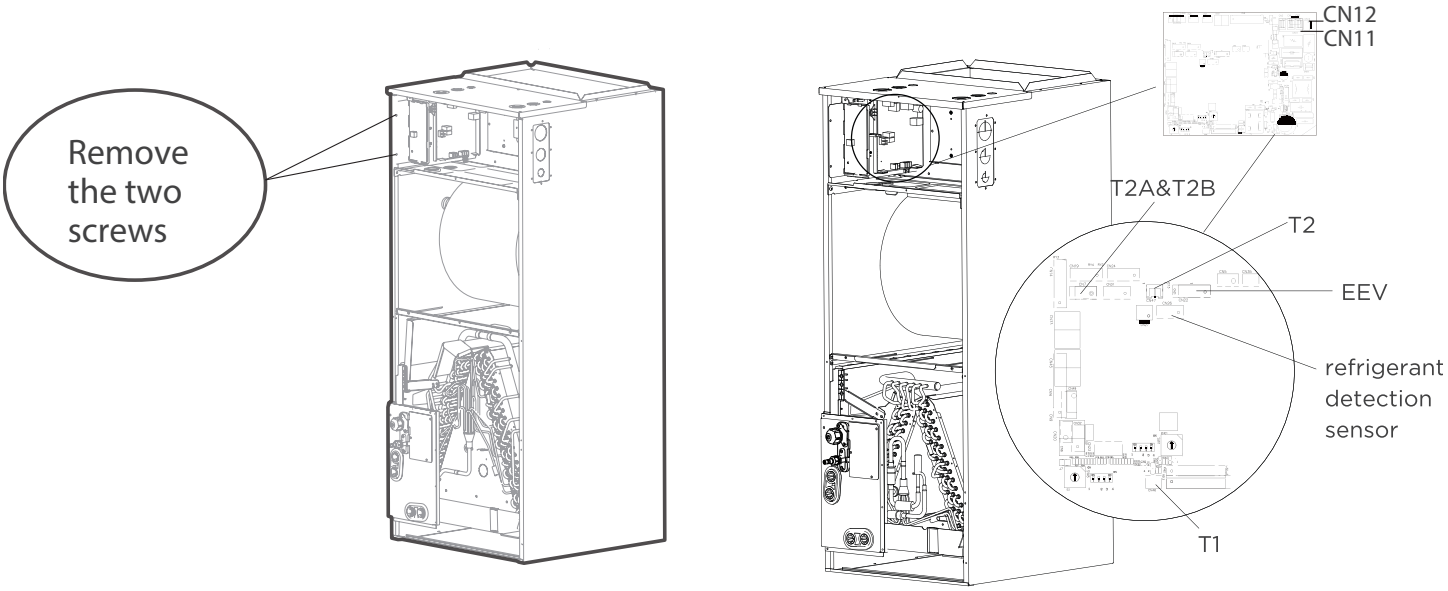

Fig. 22 — Step 6

6. Reinstall the electronic control box with the entire unit, fix it with screws, and insert the wire body properly.

   Plug temperature sensors T1, T2, T2A, T2B refrigerant detection sensor and electronic expansion valve (EEV), and fan motor power pair plug (CN11) from the control board.

Table 14 — Color Coding for 230/115 Connections

	MOTOR	TRANSFORMER
230V	White Connector	Red Cable
115V	Red Connector	White Cable

Specific Wiring Methods

WARNING

Refer to the wiring nameplate for the wiring method. Do not connect 24V AC to S1 - S2, as this will damage the system.

SCENARIO 1:

This is the preferred method of control. This allows a 24 volt thermostat to be used with RS485 communication between the indoor and outdoor units.

- The **B** terminal and **W** terminal should not be used together.
- **W** should only be used with a conventional thermostat for the heat demand.
- DS is a reserve Terminal.

NOTE: None of the outdoor 24 volt terminals are to be used for Scenario 1.

To use a 24V thermostat, refer to the Figure 23.

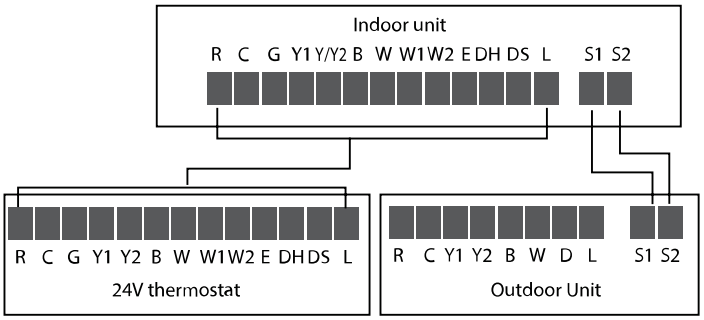

Fig. 23 — Scenario 1

SCENARIO 2 (DEFAULT):

This allows the 1401 wired controller to be used with RS485 communication between indoor and outdoor units.

- None of the 24 volt terminals for the indoor or outdoor unit are to be used for Scenario 2"
- Connect the **Ha/Hb** terminals on the wired controller to the **Ha/Hb** terminals on the indoor display board with 16 AWG shielded/stranded wire.

Refer to the wiring method of indoor and outdoor unit communication and wired controller (see Figure 24).

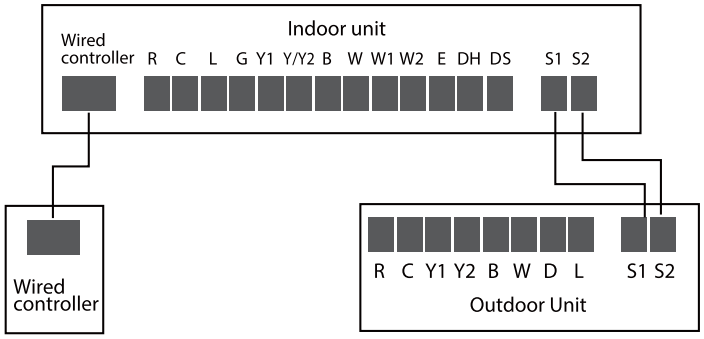

Fig. 24 — Scenario 2 (Default)

SCENARIO 3:

This allows a 24 volt thermostat to be used with 24 volt communication between the indoor and outdoor units. Some communication features will not be available with this method.

NOTE: This equipment energizes the reversing valve in heat. Ensure that the B terminal is configured at the thermostat for heat.

NOTE: This method can be used for a 37MUHA and 37MURA outdoor unit and a third party indoor unit or cased coil and gas furnace.

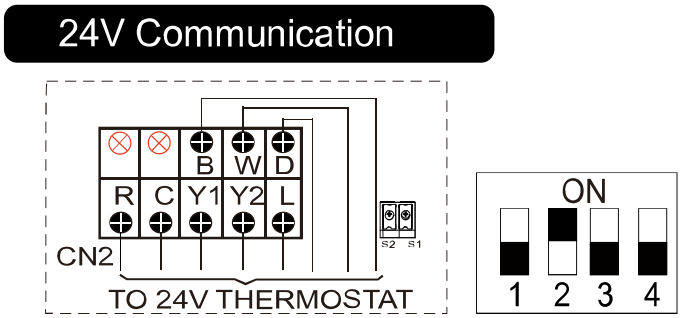

Fig. 25 — Scenario 3 - Wiring to the Outdoor Unit

NOTE: DIP switch 2 in the outdoor unit must be turned on for Scenario 3 only. Leave off for the other 2 scenarios.

NOTE: The 24 volt wire terminals in the outdoor unit should only be used for Scenario 3. S1 and S2 should only be used for Scenarios 1 and 2.

NOTE: 24V must never be connected to S1 – S2. All wiring must be in compliance with the above scenarios. Incorrect wiring can damage the outdoor and indoor control boards.

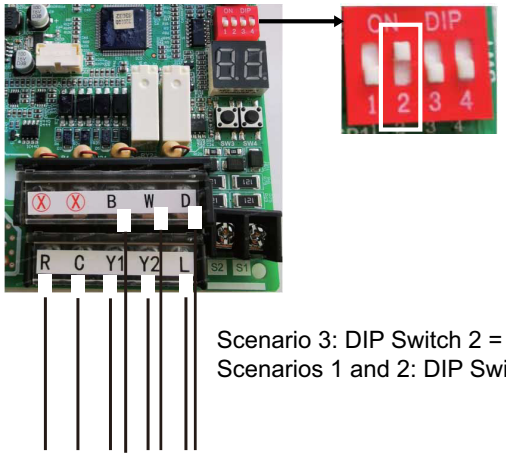

Fig. 26 — 24V Connection Dip Switch Setting

When using a 24v thermostat, please refer to the non-communicating wiring diagrams that follow:

Connection method C:

The following wiring diagram are suitable for the AHU and ODU with 24V thermostat.

Non-communication scheme wiring reference

• Wiring for 4H and 2C thermostat

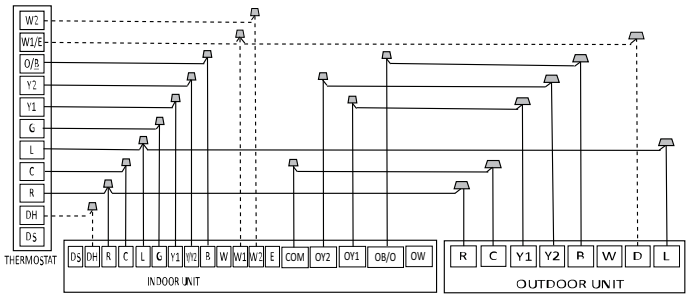

S4-2 Default on, DH function off. Turn switch off to activate DH function.

S4-4 Default on, W1 and W2 shorted for single stage Aux heat operation. Turn off to separate stages.

• Wiring for 3H and 1C thermostat

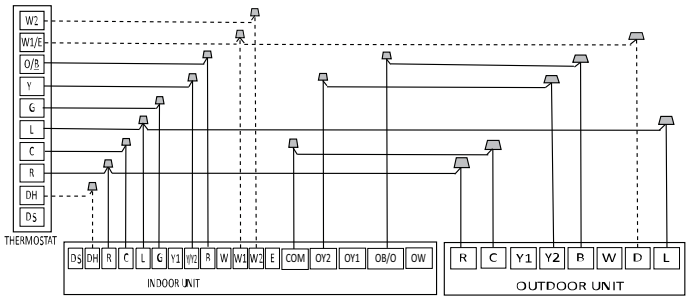

S4-2 Default on, DH function off. Turn switch off to activate DH function.

S4-4 Default on, W1 and W2 shorted for single stage Aux heat operation. Turn off to separate stages.

• Wiring for 3H and 2C thermostat

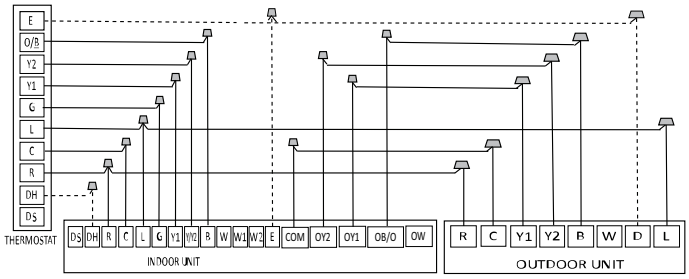

S4-2 Default on, DH function off. Turn switch off to activate DH function.

Emergency heating control two groups of electric heating at the same time

• Wiring for 3H and 2C thermostat

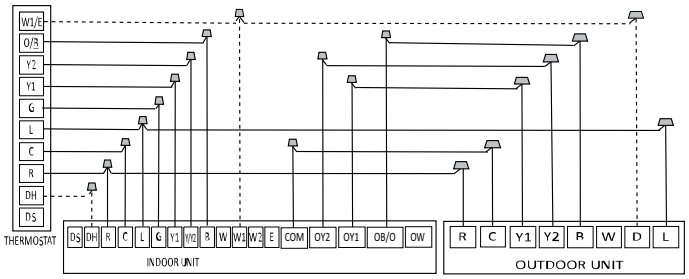

S4-2 Default on, DH function off. Turn switch off to activate DH function.

S4-4 Default on, W1 and W2 shorted for single stage Aux heat operation. Turn off to separate stages

• Wiring for 2H and 2C thermostat

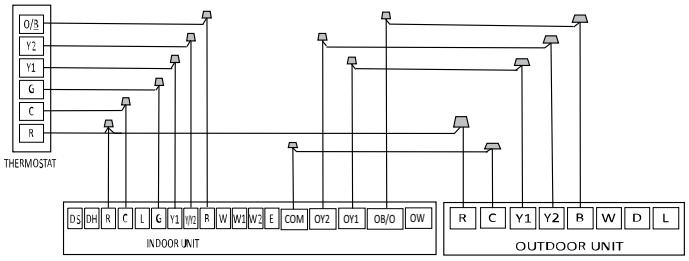

• Wiring for 2H and 1C thermostat

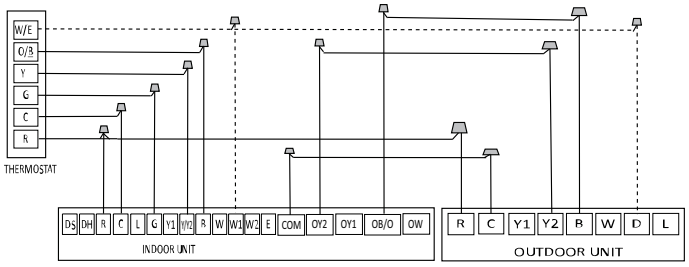

S4-4 Default on, W1 and W2 shorted for single stage Aux heat operation. Turn off to separate stages.

• Wiring for 1H and 1C thermostat

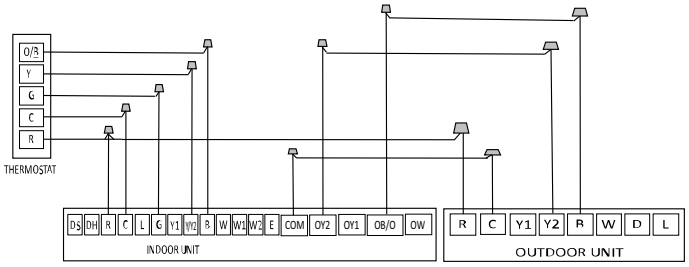

Optional Function Wiring

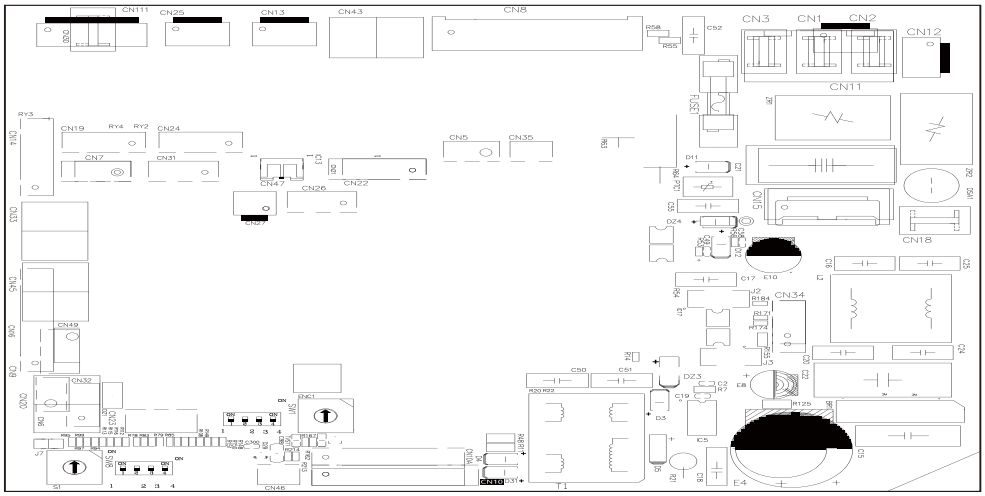

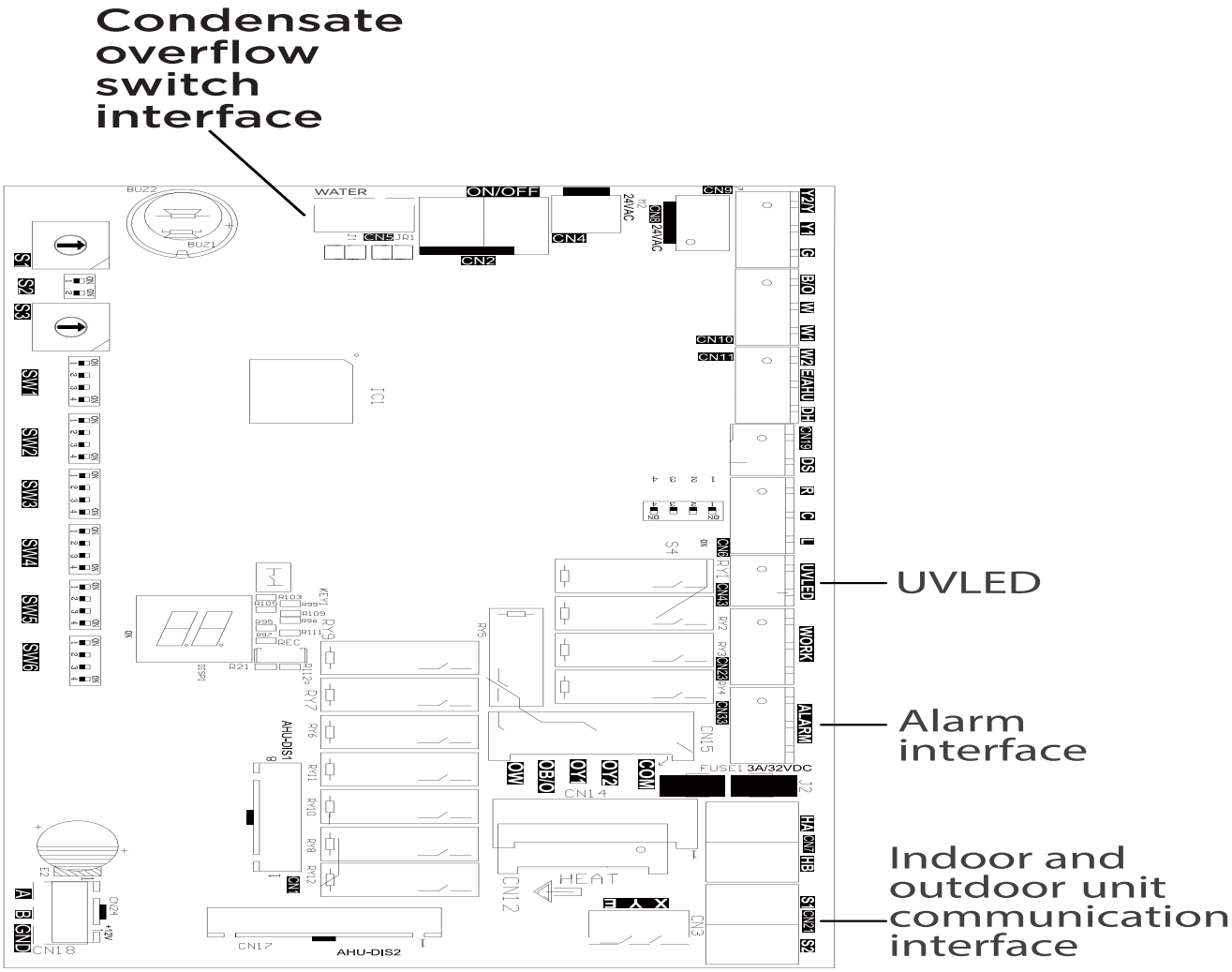

Fig. 27 —Optional Function Wiring

Condensate Overflow Switch

The unit will accommodate a remote condensate overflow switch. To enable, remove jumper J1, and connect the installer provided condensate overflow device to CN5 per below. When an overflow condition is present, the device should open connection signaling the unit to turn off the system.

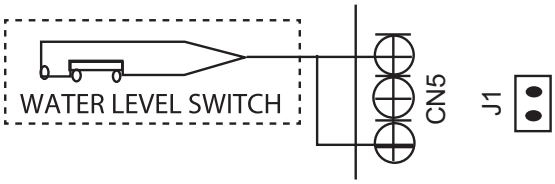

The fault warning:

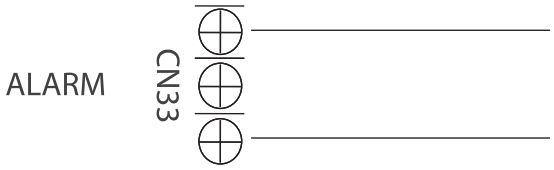

Alarm Output

An alarm output (CN33) can be utilized if actions are required when a fault is present. This is a passive outlet port, so you will need to input a voltage signal. The relay is normally-open for normal operation, and closed when a fault condition is active.

Humidifier Control

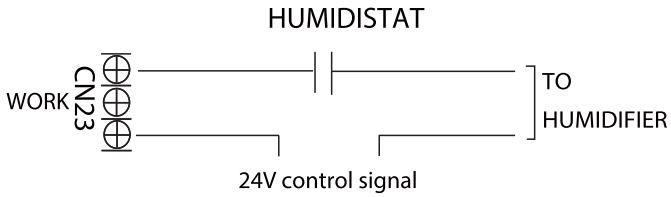

Fig. 28 —Humidistat

To connect a humidifier, utilize the dry contact “WORK” output (CN23) port as well as the R and C wires on the controller, and wire the humidistat and humidifier per above wiring diagram. When the fan is running, the CN23 relay will be closed, which will allow control to the humidistat.

UV, Fresh Air or ION Generator Wiring

Fig. 29 —UV, Fresh Air or ION Generator Wiring

The WORK port is linked with the fan. When the fan is running, the relay is closed.

Control Logic

Table 15 — Indoor Unit Connector

CONNECTOR	PURPOSE
R	24V Power Connector
C	Common
G	Fan Control
Y1	Low Demand
Y/Y2	High Demand
B	Heating Reverse Valve
W	Conventional Heat Control
W1	Stage 1 Electric Housing
W2	Stage 2 Electric Housing
E/AUX	Emergency Heating
DH	Dehumidification
DS	Reserved Signal
L	System Fault

Table 16 — Outdoor Unit Connector

CONNECTOR	PURPOSE
R	24V Power Connection
C	Common
Y1	Low Demand
Y2	High Demand
B	Heating Reverse Valve
W	Heating Control
D	Defrost Control
L	System Fault Signal

LED Display

The control displays unit status as well as any active fault codes on the LED display. If the unit is functioning normally, the LED will display current temperature setpoint. When a fault code is active, the display will flash quickly the active fault code. Please refer to the fault code table located in the troubleshooting section of the manual for detailed fault code information.

Black Button Instructions (For Scenario 2 Only)

- Press the Black button to enter the forced automatic mode, press the Black button again to enter the forced cooling mode (LED display FC), and press the Black button again to shut down.
- Long press the Black button under forced cooling mode (LED display FC) 5s to enter forced defrost mode.

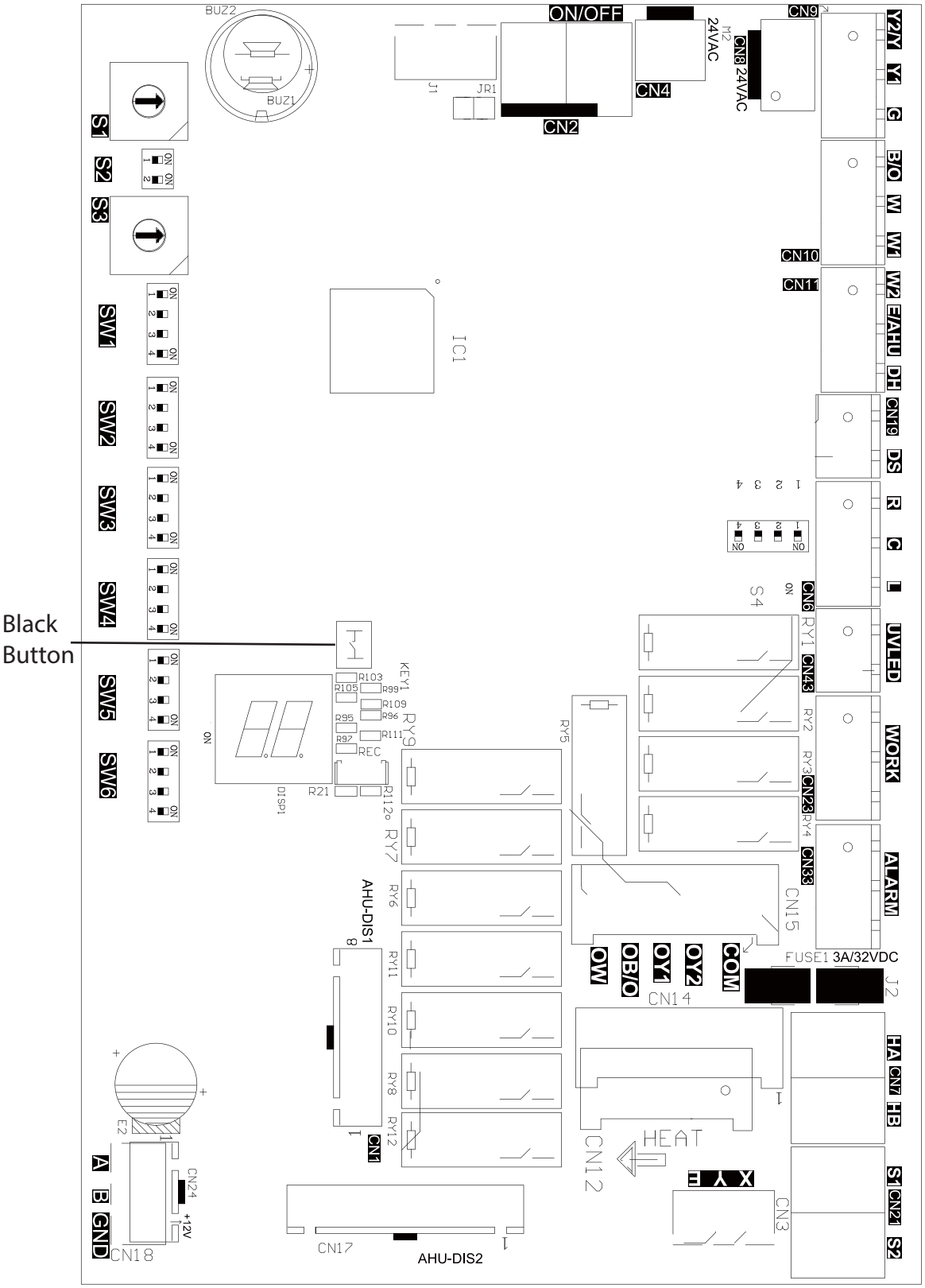

Dip Switch Definitions

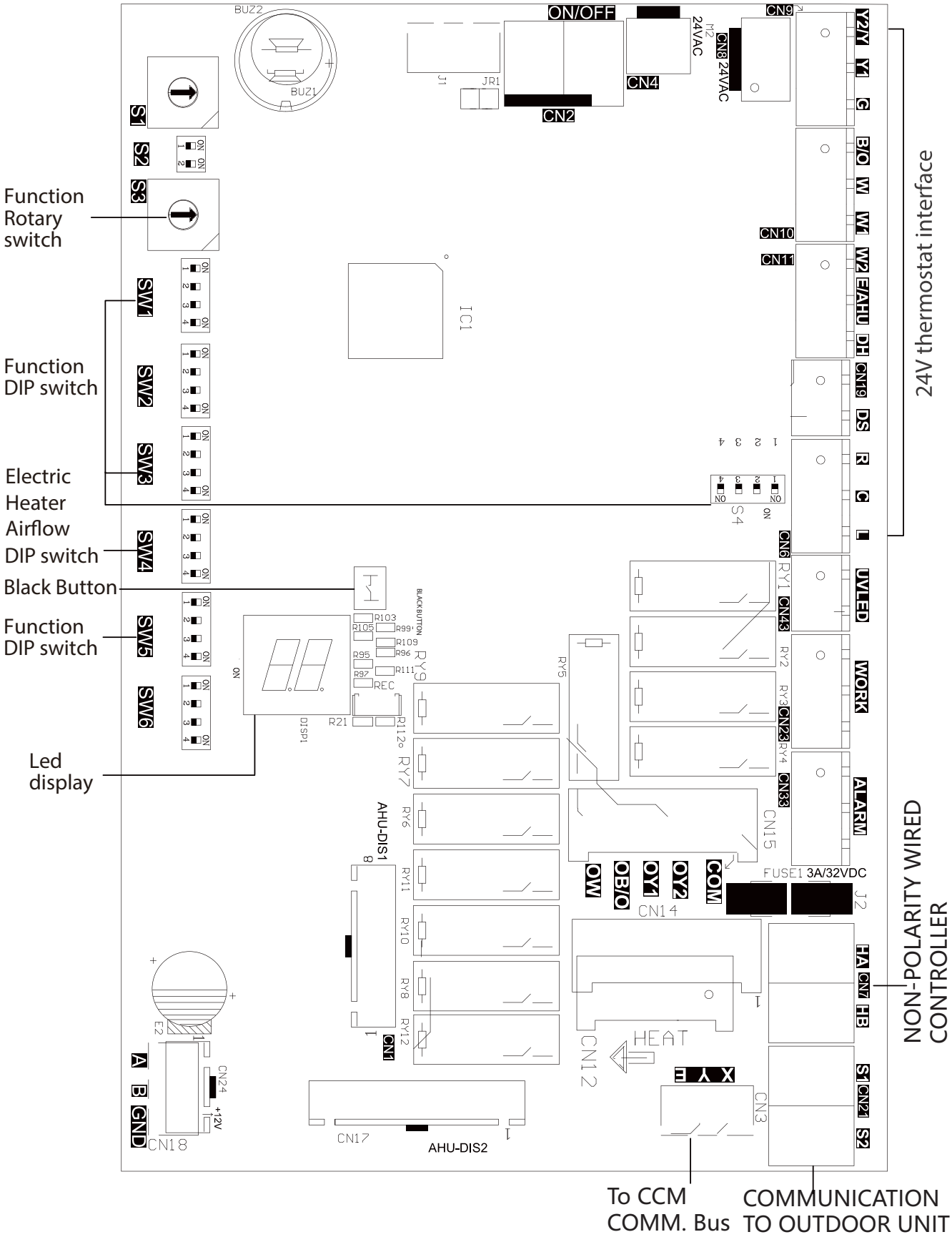

Function DIP switch settings:

The 24V thermostat mode needs to refer to the following settings:

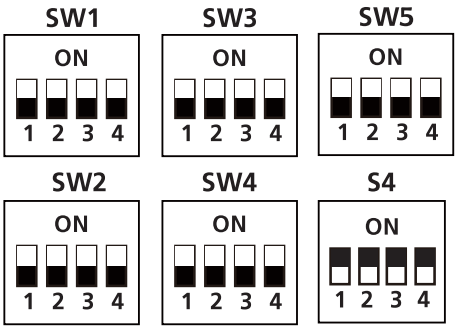

SW4-1	000 is the default 000/001/010/011/100/101/110/111, internal machines with different abilities, electric heating and PSC classification for use.
SW4-2	
SW4-3	

Function combination table of SW1-1 and SW1-4:

SW1	Control type	IDU and ODU Connection	Note
ON 1 2 3 4	Wired controller / 24V thermostat	(S1+S2) / 24V connection	Auto Discovery
ON 1 2 3 4	Wired controller	S1+S2	Scenario 2
ON 1 2 3 4	24V Thermostat	S1+S2	Scenario 1 (no outdoor unit clean function[*])
ON 1 2 3 4	24V Thermostat	24V connection	Scenario 3

[*]: Outdoor unit clean function means reversing outdoor fan to blow away dust and other attachments on the fins

NOTE: Refer to Table 22 on page 35 for setting airflow or electric heat.

Indoor Unit Dial Code

Table 17 — Indoor Unit Dial Code

NO.	DIAL CODE	CONTROL SCENARIO	FUNCTION	ON	OFF	NOTE
1	SW1-2	1,2,3	Anti-cold blow protection option	NO	[Default] YES	
2	SW1-3	1,2,3	Single cooling / heating and cooling options	Cooling	[Default] Cooling & Heating	
3	SW2-1	1	Compressor Running (demand working with heat pump+ Electric heat)	Compressor slower speed	[Default] Faster Compressor	Only affects compressor and W1
4	SW2-1	2	Temperature differential to activate first stage auxiliary heat (the GAP of T1 and Ts), Wire controller demand with heat pump + Electric heat working together	2°F (1°C)	[Default]	
5	SW2-2	2	Electric heat on delay	YES	[Default] NO	
6	SW2-3	2	Electric auxiliary heating delay to start time	30 minutes	[Default] 15 minutes	Based on SW2-2 is ON
7	SW2-4	1	Compressor	The operation of heat pump is limited by the outdoor temperature, and the operation of auxiliary heat is not limited.The system makes judgments according to the following rules: 1) The compressor can be operated when the outdoor temperature is ⩾ S3 DIP switch temperature +2 °C. 2) The compressor cannot be operated when the outdoor temperature is lower than the S3 DIP switch temperature.	[Default] The operation of heat pump is limited by the outdoor temperature, and the operation of auxiliary heat is not limited. The system makes judgments based on the following rules: 1) The compressor cannot be operated when the outdoor temperature is lower than the S3 DIP switch. 2) The compressor can be operated when the outdoor temperature is ⩾S3 DIP switch temperature +2 °C.	SW2-4 and S3 need to working together
8	SW2-4	2	Compressor/Auxiliary heat outdoor ambient lockout	The operation of heat pump is limited by the outdoor temperature, and the operation of auxiliary heat is not limited.The system makes judgments according to the following rules: 1) The compressor can be operated when the outdoor temperature is ≥S3 DIP switch temperature +2 °C. 2) The compressor cannot be operated when the outdoor temperature is lower than the S3 DIP switch temperature.	[Default] Only one heat pump or auxiliary heat can be operated.The system makes judgments according to the following rules: 1) When the outdoor temperature is lower than the S3 DIP switch temperature, the compressor is not allowed to operated, but auxiliary heat is allowed to operated; 2) When the outdoor temperature is ≥S3 DIP switch temperature +2(°C), the compressor can be operated, but auxiliary heat cannot be operated.	
9	Rotary Switch S3	1,2	Set outdoor temperature Limitation (for auxiliary heating or compressor)	Table A		
10	SW3-1	1	Maximum continuous runtime allowed before system automatically stages up capacity to satisfy set point. This adds 1 to 5°F to the user set point in the calculated control point to increase capacity and satisfy user set point	30 minutes	[Default] 90 minutes	
11	SW3-2	1	Cooling and heating Y/Y2 temperature differential adjustment.	Compressor slower speed	[Default] Faster Compressor	Only affects compressor

NO.	DIAL CODE	CONTROL SCENARIO	FUNCTION	ON	OFF	NOTE
12	SW3-3	1	Compressor Running (demand working with heat pump+ Electric heat)	Compressor slower speed	[Default] Faster Compressor	Only affects compressor and W2
13	SW3-3	2	Temperature differential to activate second stage auxiliary heating (the GAP of T1 and Ts) Wire controller demand with heat pump + Electric heat working together	4°F(2°C)	[Default] 6°F (3°C)	
14	SW3-4	1,3	Fan speed of cooling mode when 24V Thermostat is applied for.	Turbo	High	
15	SW4-1 SW4-2 SW4-3	1,2,3	Electric heat nominal CFM adjustment	Available settings are 000/001/010/011. Each digit corresponds an individual switch position. For example [SW4-1 OFF, SW4-2 ON, SW4 -3 OFF] = 010		
16	SW4-4	2	Temperature differential to activate third stage auxiliary heating (the GAP of T1 and Ts) Wire controller demand with heat pump+ Electric heat working together	6°F(3°C)	[Default] 8°F (4°C)	Only valid for product which has three stage auxiliary heating.
17	S4-4	1,3	Default ON	[Default] For single stage supplemental heat,W1 and W2 are connected	For dual stage supplemental heat, W1 and W2 are controlled independently.	
18	S4-2	1,3	DH function selection	[Default] Dehumidification control not available	Dehumidification feature is enabled through thermostat	
19	SW5-3	1,2,3	L or Alarm relay selection	L output 24V or alarm relay close only when refrigerant sensor fault or R454B refrigerant leakage be detected	[Default] L output 24V or alarm relay close when any fault be detected	
20	SW5-4	1,3	R output selection	R stops output 24V when R454B refrigerant leakage is detected	[default] R keeps output 24V even when R454B refrigerant leakage is detected	

Table 18 — Control Scenario

CONTROL SCENARIO		
	24V, Tstat, S1+S2	1
	Wired Controller S1+S2	2
	Full 24V	3

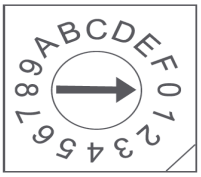

Fig. 30 — Dip Switch

Note: For Scenario 1 & Scenario 2, when the IDU paired with a single split outdoor unit, after power-on or recovery from IDU and ODU communication failure, the compressor in heating mode delays starting for 3 minutes.

Address DIP Switch:

Address dialing S1+SW8: When the user uses the centralized controller, the address dialing is required.

Network address: The address silkscreen is NET address, which is composed of a 16-bit address rotary code S1 plus a two-digit DIP switch SW8 [Set during engineering installation, no network function does not need to be set].

When SW8 is 00 (the dialing code is not connected), the network address value is the value of S1;

When SW8 is 10 (corresponding to the switch of the hardware connected to the 10K resistor), the network address value is S1 plus 16;

Determined by dial code SW8 1-10K 2-5.1K

When SW8 is 01 (corresponding to the dial code of the 5.1K resistor connected to the hardware is turned on), the network address value is the value of S1 plus 32;

When SW8 is 11 (all dialing codes are on), the network address value is the value of S1 plus 48.

Table 19 — Table A for use with dip switch 2-4

S3	S3 (°F)	S3 (°C)
0	OFF	OFF
1	-22	-30
2	-18	-28
3	-15	-26
4	-11	-24
5	-8	-22
6	-4	-20
7	3	-16
8	10	-12
9	18	-8
A	25	-4
B	32	0
C	36	2
D	39	4
E	43	6
F	46	8

Table 20 — Determined by dial code SW8 1-10K 2-5.1K

Dial Code Selection	NET Address
	S1 + 48
	S1 + 32
	S1 + 16
	S1

Outdoor Unit Dip Switch Setting

Press the SW4 button 10 seconds for force defrosting.

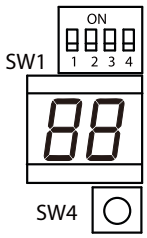

Fig. 31 — Outdoor Unit Dip Switch Setting

Table 21 — Outdoor Unit Dip Switch Setting

NO.	DIAL CODE	FEATURES	ON	OFF
1	SW1-1	Function to be defined		
2	SW1-2	Communication dial code	24V communication only (no outdoor unit clean function[*])	24V communication/ 485 communication
3	SW1-3	Strong cold and strong heat function	**The cooling/ heating target pressure compensation value is valid**	The cooling/ heating target pressure compensation value is invalid
4	SW1-4	Enhanced defrosting function	Enhanced defrosting	Default setting (standard defrost algorithm)
[*]: Outdoor unit clean function means reversing outdoor fan to blow away dust and other attachments on the fins.				

Table 22 — Air Volume

CAPACITY	EXTERNAL STATIC PRESSURE RANGE	FAN SPEED	ELECTRIC AUXILIARY HEAT MODULE	24V THERMOSTAT		WIRED CONTROLLER		AIRFLOW VOLUME (CFM)
				DIP SWITCH	24V TERMINAL ENGAGED	DIP SWITCH	MODE	
18K (1.5 Ton)	0 - 0.80 in.wc.	Cooling Turbo	—	SW3-4=ON	Y2/Y	—	Cool	618
		Cooling High	—	SW3-4=OFF	Y2/Y	—	Cool	576
		Cooling Medium	—	—	Y1	—	Cool	529
		Cooling Low	—	—	—	—	Cool	488
		Heat Pump Turbo	—	—	—	—	Heat	565
		Heat Pump High	—	—	B+Y2/Y, W	—	Heat	541
		Heat Pump Medium	—	—	B+Y1	—	Heat	435
		Heat Pump Low	—	—	—	—	Heat	400
		Electric auxiliary heat module 0(Default)	10kW	SW4-1=OFF SW4-2=OFF SW4-3=OFF	W1, W2, AUX	SW4-1=OFF SW4-2=OFF SW4-3=OFF	Heat + AUX, AUX	653
		Electric auxiliary heat module 1	10kW, 8kW	SW4-1=OFF SW4-2=OFF SW4-3=ON	W1, W2, AUX	SW4-1=OFF SW4-2=OFF SW4-3=ON	Heat + AUX, AUX	624
		Electric auxiliary heat module 2	8kW	SW4-1=OFF SW4-2=ON SW4-3=OFF	W1, W2, AUX	SW4-1=OFF SW4-2=ON SW4-3=OFF	Heat + AUX, AUX	594
		Electric auxiliary heat module 3	5kW, 3kW	SW4-1=OFF SW4-2=ON SW4-3=ON	W1, W2, AUX	SW4-1=OFF SW4-2=ON SW4-3=ON	Heat + AUX, AUX	565
24K (2 Ton)	0 - 0.80 in.wc.	Cooling Turbo	—	SW3-4=ON	Y2/Y	—	Cool	824
		Cooling High	—	SW3-4=OFF	Y2/Y	—	Cool	759
		Cooling Medium	—	—	Y1	—	Cool	694
		Cooling Low	—	—	—	—	Cool	629
		Heat Pump Turbo	—	—	—	—	Heat	788
		Heat Pump High	—	—	B+Y2/Y, W	—	Heat	753
		Heat Pump Medium	—	—	B+Y1	—	Heat	641
		Heat Pump Low	—	—	—	—	Heat	524
		Electric auxiliary heat module 0(Default)	15kW	SW4-1=OFF SW4-2=OFF SW4-3=OFF	W1, W2, AUX	SW4-1=OFF SW4-2=OFF SW4-3=OFF	Heat + AUX, AUX	871
		Electric auxiliary heat module 1	15kW, 10kW	SW4-1=OFF SW4-2=OFF SW4-3=ON	W1, W2, AUX	SW4-1=OFF SW4-2=OFF SW4-3=ON	Heat + AUX, AUX	841
		Electric auxiliary heat module 2	10kW, 8kW	SW4-1=OFF SW4-2=ON SW4-3=OFF	W1, W2, AUX	SW4-1=OFF SW4-2=ON SW4-3=OFF	Heat + AUX, AUX	818
		Electric auxiliary heat module 3	5kW	SW4-1=OFF SW4-2=ON SW4-3=ON	W1, W2, AUX	SW4-1=OFF SW4-2=ON SW4-3=ON	Heat + AUX, AUX	788

CAPACITY	EXTERNAL STATIC PRESSURE RANGE	FAN SPEED	ELECTRIC AUXILIARY HEAT MODULE	24V THERMOSTAT		WIRED CONTROLLER		AIRFLOW VOLUME (CFM)
				DIP SWITCH	24V TERMINAL ENGAGED	DIP SWITCH	MODE	
30K(2.5 Ton)	0 - 0.80 in.wc.	Cooling Turbo	—	SW3-4=ON	Y2/Y	—	Cool	988
		Cooling High	—	SW3-4=OFF	Y2/Y	—	Cool	894
		Cooling Medium	—	—	Y1	—	Cool	806
		Cooling Low	—	—	—	—	Cool	712
		Heat Pump Turbo	—	—	—	—	Heat	918
		Heat Pump High	—	—	B+Y2/Y, W	—	Heat	876
		Heat Pump Medium	—	—	B+Y1	—	Heat	665
		Heat Pump Low	—	—	—	—	Heat	453
		Electric auxiliary heat module 0(Default)	15kW	SW4-1=OFF SW4-2=OFF SW4-3=OFF	W1, W2, AUX	SW4-1=OFF SW4-2=OFF SW4-3=OFF	Heat + AUX, AUX	1088
		Electric auxiliary heat module 1	15kW, 10kW	SW4-1=OFF SW4-2=OFF SW4-3=ON	W1, W2, AUX	SW4-1=OFF SW4-2=OFF SW4-3=ON	Heat + AUX, AUX	1029
		Electric auxiliary heat module 2	10kW, 8kW	SW4-1=OFF SW4-2=ON SW4-3=OFF	W1, W2, AUX	SW4-1=OFF SW4-2=ON SW4-3=OFF	Heat + AUX, AUX	976
		Electric auxiliary heat module 3	5kW	SW4-1=OFF SW4-2=ON SW4-3=ON	W1, W2, AUX	SW4-1=OFF SW4-2=ON SW4-3=ON	Heat + AUX, AUX	918

Table 23 — Air Volume

CAPACITY	EXTERNAL STATIC PRESSURE RANGE	FAN SPEED	ELECTRIC AUXILIARY HEAT MODULE	24V THERMOSTAT		WIRED CONTROLLER		AIRFLOW VOLUME (CFM)
				DIP SWITCH	24V TERMINAL ENGAGED	DIP SWITCH	MODE	
36K（3 Ton）	0 - 0.80 in.wc.	Cooling Turbo	—	SW3-4=ON	Y2/Y	—	Cool	1188
		Cooling High	—	SW3-4=OFF	Y2/Y	—	Cool	1082
		Cooling Medium	—	—	Y1	—	Cool	971
		Cooling Low	—	—	—	—	Cool	865
		Heat Pump Turbo	—	—	—	—	Heat	1112
		Heat Pump High	—	—	B+Y2/Y, W	—	Heat	1059
		Heat Pump Medium	—	—	B+Y1	—	Heat	794
		Heat Pump Low	—	—	—	—	Heat	582
		Electric auxiliary heat module 0(Default)	20kW	SW4-1=OFF SW4-2=OFF SW4-3=OFF	W1, W2, AUX	SW4-1=OFF SW4-2=OFF SW4-3=OFF	Heat + AUX, AUX	1306
		Electric auxiliary heat module 1	15kW	SW4-1=OFF SW4-2=OFF SW4-3=ON	W1, W2, AUX	SW4-1=OFF SW4-2=OFF SW4-3=ON	Heat + AUX, AUX	1241
		Electric auxiliary heat module 2	10kW, 8kW	SW4-1=OFF SW4-2=ON SW4-3=OFF	W1, W2, AUX	SW4-1=OFF SW4-2=ON SW4-3=OFF	Heat + AUX, AUX	1176
		Electric auxiliary heat module 3	5kW, 8kW	SW4-1=OFF SW4-2=ON SW4-3=ON	W1, W2, AUX	SW4-1=OFF SW4-2=ON SW4-3=ON	Heat + AUX, AUX	1112
		Cooling Turbo	—	SW3-4=ON	Y2/Y	—	Cool	1600
		Cooling High	—	SW3-4=OFF	Y2/Y	—	Cool	1471
		Cooling Medium	—	—	Y1	—	Cool	1282
		Cooling Low	—	—	—	—	Cool	1094
		Heat Pump Turbo	—	—	—	—	Heat	1471
		Heat Pump High	—	—	B+Y2/Y, W	—	Heat	1324
		Heat Pump Medium	—	—	B+Y1	—	Heat	1141
		Heat Pump Low	—	—	—	—	Heat	976
48K（4 Ton）	0 - 0.80 in.wc.	Electric auxiliary heat module 0(Default)	20kW	SW4-1=OFF SW4-2=OFF SW4-3=OFF	W1, W2, AUX	SW4-1=OFF SW4-2=OFF SW4-3=OFF	Heat + AUX, AUX	1741
		Electric auxiliary heat module 1	15kW	SW4-1=OFF SW4-2=OFF SW4-3=ON	W1, W2, AUX	SW4-1=OFF SW4-2=OFF SW4-3=ON	Heat + AUX, AUX	1653
		Electric auxiliary heat module 2	10kW, 8kW	SW4-1=OFF SW4-2=ON SW4-3=OFF	W1, W2, AUX	SW4-1=OFF SW4-2=ON SW4-3=OFF	Heat + AUX, AUX	1559
		Electric auxiliary heat module 3	8kW	SW4-1=OFF SW4-2=ON SW4-3=ON	W1, W2, AUX	SW4-1=OFF SW4-2=ON SW4-3=ON	Heat + AUX, AUX	1471
		Cooling Turbo	—	SW3-4=ON	Y2/Y	—	Cool	1806
		Cooling High	—	SW3-4=OFF	Y2/Y	—	Cool	1582
		Cooling Medium	—	—	Y1	—	Cool	1359
		Cooling Low	—	—	—	—	Cool	1135
		Heat Pump Turbo	—	—	—	—	Heat	1659
		Heat Pump High	—	—	B+Y2/Y, W	—	Heat	1582
		Heat Pump Medium	—	—	B+Y1	—	Heat	1247
		Heat Pump Low	—	—	—	—	Heat	976
60K（5 Ton）	0 - 0.80 in.wc.	Cooling Turbo	—	SW3-4=ON	Y2/Y	—	Cool	1806
		Cooling High	—	SW3-4=OFF	Y2/Y	—	Cool	1582
		Cooling Medium	—	—	Y1	—	Cool	1359
		Cooling Low	—	—	—	—	Cool	1135
		Heat Pump Turbo	—	—	—	—	Heat	1659
		Heat Pump High	—	—	B+Y2/Y, W	—	Heat	1582
		Heat Pump Medium	—	—	Y1	—	Heat	1247
		Heat Pump Low	—	—	—	—	Heat	976
		Electric auxiliary heat module 0(Default)	25kW	SW4-1=OFF SW4-2=OFF SW4-3=OFF	W1, W2, AUX	SW4-1=OFF SW4-2=OFF SW4-3=OFF	Heat + AUX, AUX	2171
		Electric auxiliary heat module 1	15kW, 20kW	SW4-1=OFF SW4-2=OFF SW4-3=ON	W1, W2, AUX	SW4-1=OFF SW4-2=OFF SW4-3=ON	Heat + AUX, AUX	2029
		Electric auxiliary heat module 2	10kW, 15kW	SW4-1=OFF SW4-2=ON SW4-3=OFF	W1, W2, AUX	SW4-1=OFF SW4-2=ON SW4-3=OFF	Heat + AUX, AUX	1894
		Electric auxiliary heat module 3	10kW	SW4-1=OFF SW4-2=ON SW4-3=ON	W1, W2, AUX	SW4-1=OFF SW4-2=ON SW4-3=ON	Heat + AUX, AUX	1753

NOTE: The constant airflow volume motor is applied. So the airflow volume is constant at all ESP within stated range.

Step 6 - Down Flow and Horizontal Right Installations

Follow these steps to perform vertical down installation and horizontal right installation.

1. Open the upper cover.
2. Open the cover of the electronic control box.
3. Connect the wire according to the wiring diagram.
4. Connect the pipes and install the drainage pipes.

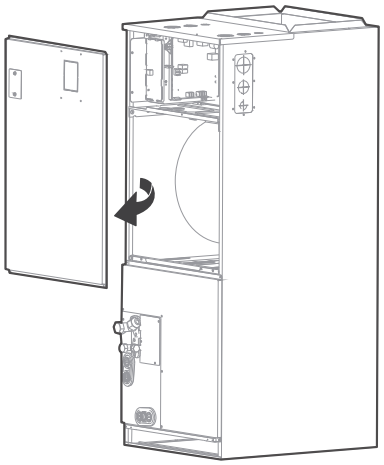

Fig. 32 — Connecting the Wire and pipes

Down Flow and Horizontal Right Steps

NOTE: The unit may be installed in one of the upflow, downflow, horizontal left or horizontal right orientations.

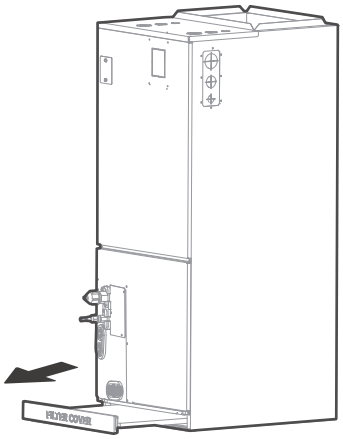

Step 1

Remove the filter door, then take the filter off.

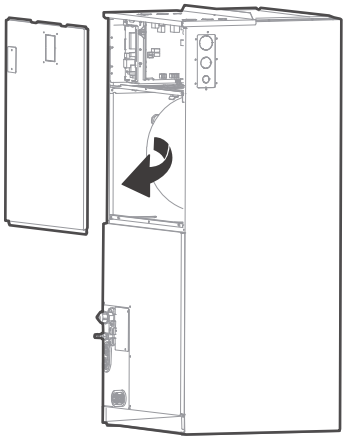

Step 2

Remove the upper cover assembly.

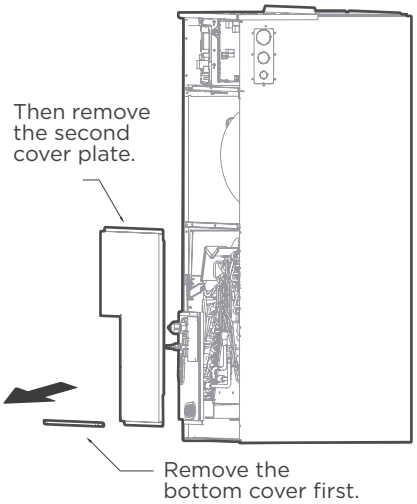

Step 3

Remove the evaporator cover plate.

Step 4

Indication of the position of each temperature sensor of the evaporator:

18-24K model

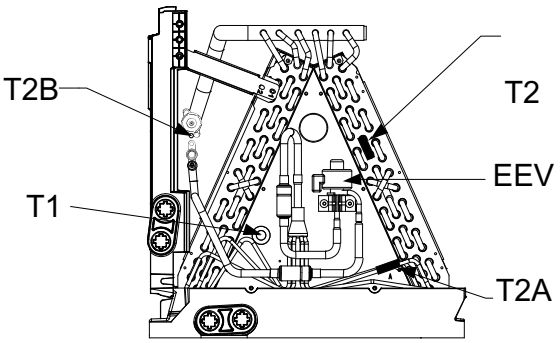

30-36K model

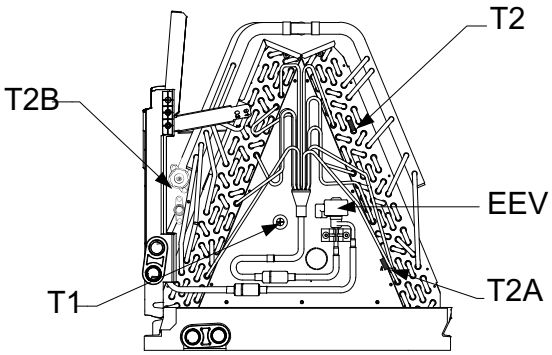

48-60K model

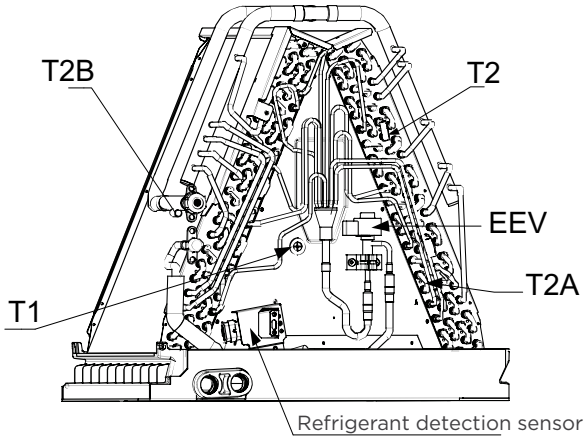

Step 5

Unplug temperature sensors T1, T2, T2A, T2B, refrigerant detection sensor and electronic expansion valve (EEV) from the control board.
T1: IDU room temp. sensor(T1)
T2: IDU coil temp. sensor(T2)
T2A: Evaporator coil temperature sensor(T2A)
T2B: Evaporator coil inlet temperature sensor(T2B)

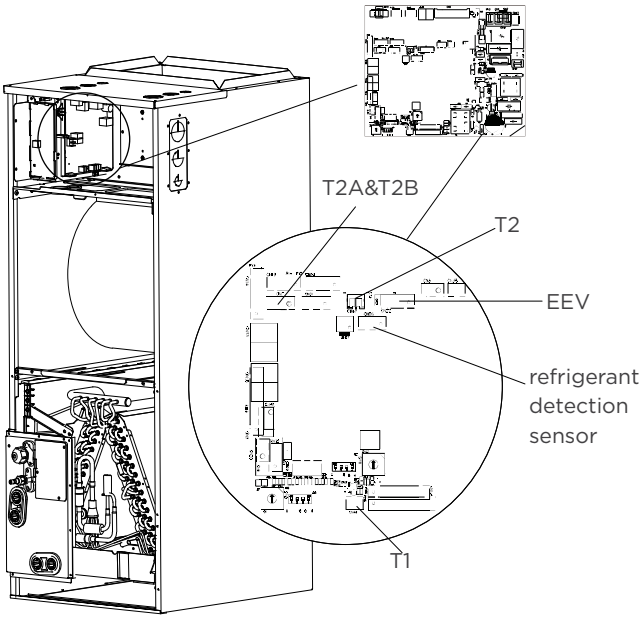

Step 6

Remove T1, T2, T2A, T2B, EEV, refrigerant detection sensor wire ties.

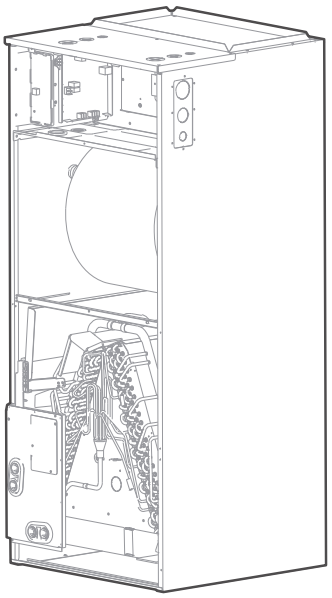

Step 7

Remove the evaporator and drain pan and rotate 180° (when your equipment need to be vertical downed configuration).

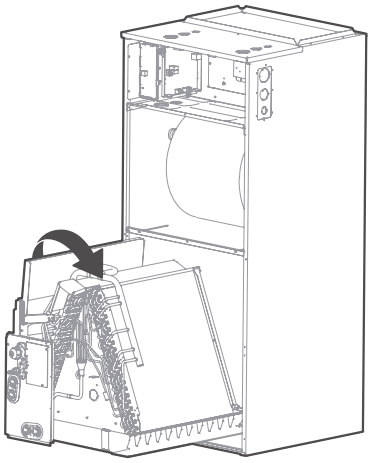

Step 8

Adjust the mounting parts position according to the direction of the equipment.

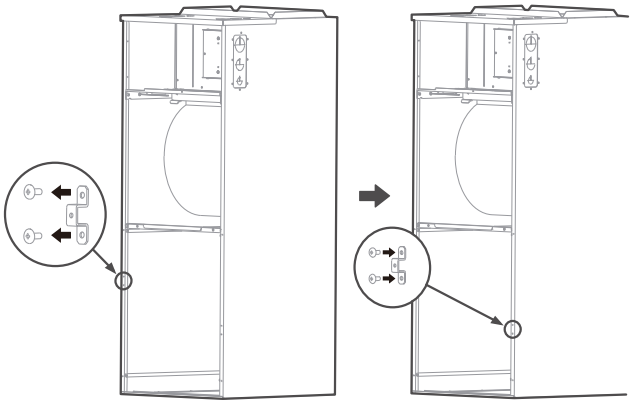

Step 9

Reinstall the evaporator and drain pan.

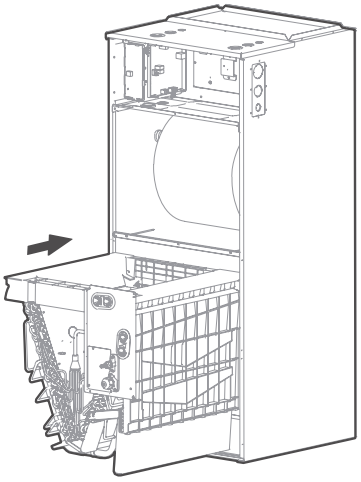

Step 10

Reinstall T1, T2, T2A, T2B sensor plugs and electronic expansion valve (EEV) and tie up the sensor wires.

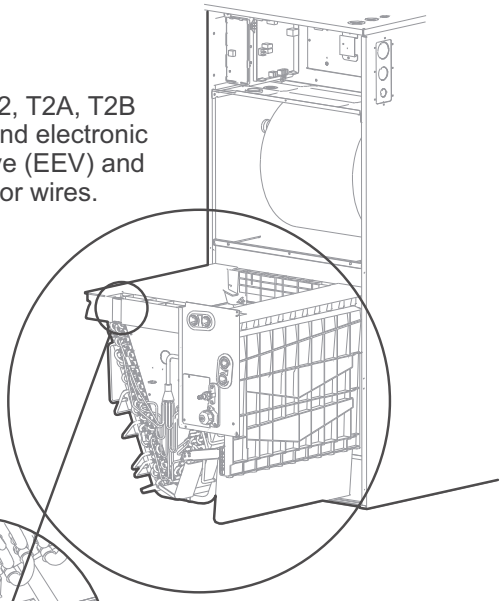

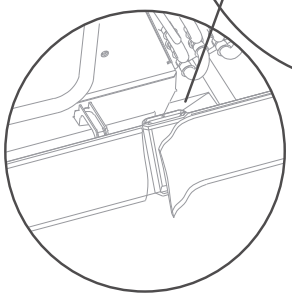

Cut the foam gasket.

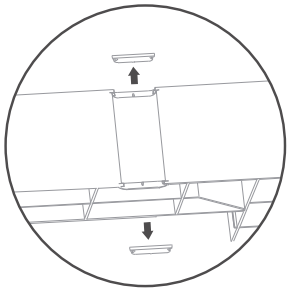

Remove knockouts.

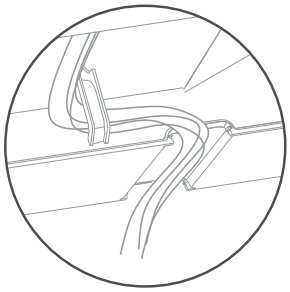

Hook the wire into the buckle and go down from the wire slot.

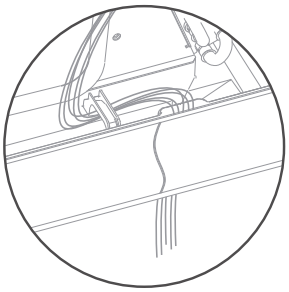

Replace the foam gasket over the wires.

NOTE: The wire body needs to pass through the wire groove from the drain pan and be stuck on the hook of the drain pan.

Step 11

The evaporator is assembled in place.

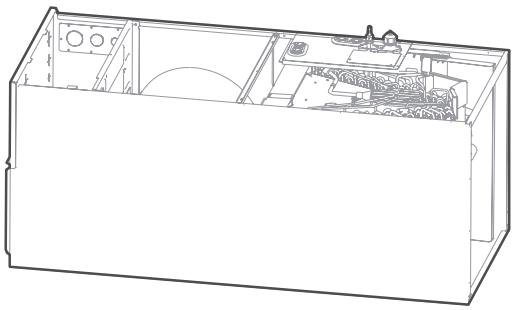

Step 12

Use cable ties to attach the room temperature sensor.

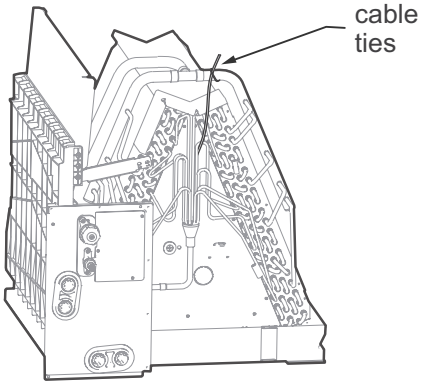

Step 13

Reinstall the evaporator cover plate.

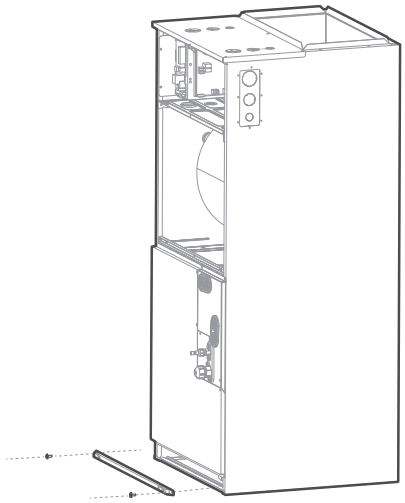

Step 14

Connect the wire according to the wiring diagram.

Step 15

Reassemble the upper cover and re-install the filter cover plate.

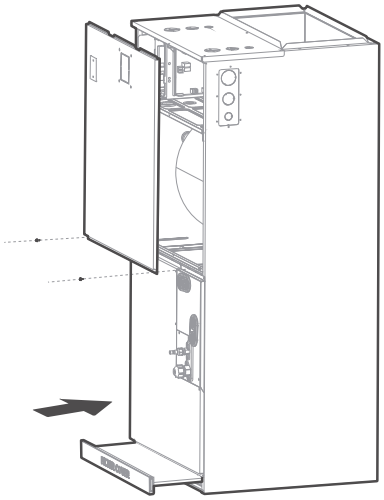

Step 16

Connect the pipes and install the drainage pipes.

CAUTION

FOR ALL PIPES INSTALLATION

Insulate all piping to prevent condensation, which could lead to water damage. The drainpipe is used to drain water away from the unit. If the drainpipe is bent or installed incorrectly, water may leak and cause a water-level switch malfunction. In **HEAT** mode, the outdoor unit discharges water. Ensure the drain hose is placed in an appropriate area to avoid water damage and icy conditions on walkways.

DO NOT pull the drainpipe forcefully; doing so could disconnect it.

NOTE: If installed above a finished living space, a secondary drain pan (as required by many building codes), must be installed under the entire unit and its condensate drain line must be routed to a location such that the user will see the condensate discharge.

NOTE ON PURCHASING PIPES: Installation requires PVC pipe or other suitable material per local and national codes, which can be obtained at your local hardware store or dealer.

\

WARNING

This appliance is not intended for use by persons (including children) with reduced physical, sensory or mental capabilities, or lack of experience and knowledge, unless they have been given supervision or instruction concerning use of the appliance by a person responsible for their safety. Children should be supervised to ensure that they do not play with the appliance.

WARNING

After removal of drain pan plug(s), check drain hole(s) to verify that drain opening is fully open and free of any debris. Also check to ensure that no debris has fallen into the drain pan during installation that may plug up the drain opening.
Seal around the exiting drain pipe, liquid and suction lines to prevent infiltration of humid air.
On units of this type, where the blower “draws” rather than “blows” air through the coil, traps must be installed in the condensate drain lines (primary and auxiliary, if used).
Traps prevent the blower from drawing air through the drain lines into the air supply.

Vertical Installations

These units operate with a negative pressure at the drain connections and a drain trap is required. The trap needs to be installed as close to the unit as possible. Make sure the top of the trap is below the connection to the drain pan to allow complete drainage of the pan.

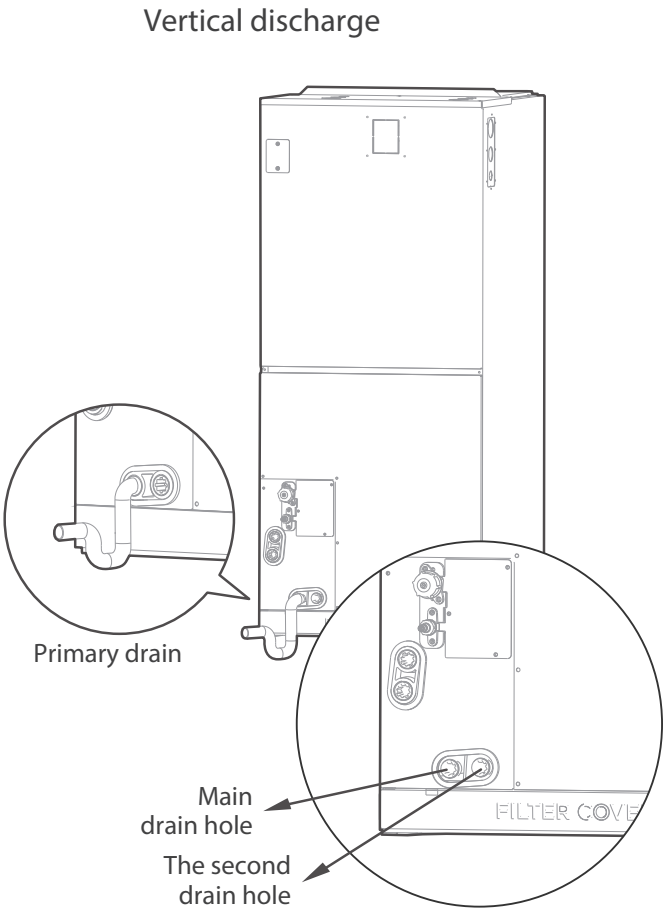

Fig. 33 — Vertical Discharge

NOTE: Horizontal runs must also have an anti-siphon air vent (standpipe) install ahead of the horizontal run to eliminate air trapping.

CAUTION

The drainpipe outlet should be at least 5cm(1.9in) above the ground. If it touches the ground, the unit may become blocked and malfunction.

Step 7 - Refrigerant Piping

Table 24 — Refrigerant Piping

AIR HANDLER UNIT MODEL	AIR HANDLER UNIT CONNECTION (IN.FLARE)		ADAPTER REQUIRED AT AIR HANDLER UNIT(IN.FLARE TO BRAZE)	OUTDOOR MODEL	OUTDOOR UNIT CONNECTION (IN.FLARE		ADAPTER REQUIRED AT OUTDOOR UNIT (IN.FLARE TO FLARE OR BRAZE)
18K/24K/ 30K/36K/ 48K/60K	Liquid	3/8	3/8flare → 3/8braze	37MURA-Size 18K	Liquid	3/8	3/8flare → 3/8braze
					Gas	5/8	5/8flare → 3/4braze
							5/8flare → 3/4braze
	Gas	3/4	3/4flare → 3/4braze	37MUHA-All Sizes 37MURA-All Sizes except 18K	Liquid	3/8	3/8flare → 3/8braze
	Liquid	3/8	3/8flare → 3/8braze		Gas	3/4	3/4flare → 3/4braze
	Gas	3/4	3/4flare → 3/4braze				

IMPORTANT: Suction line must be insulated.

- **The minimum refrigerant line length between the indoor and outdoor units is 10 ft. (3 m).**
- **Table 25 lists the pipe sizes for the indoor unit. Refer to Table 29 on page 46 for the additional allowed piping lengths and refrigerant information.**
- **Refer to Table 27 for details regarding the allowable pipe length and height difference.**

Table 25 — Piping Size

		18K	24K	30K	36K	48K	60K
Gas Pipe (Connection Size)	In (mm)	3/4 (19)	3/4 (19)	3/4 (19)	3/4 (19)	3/4 (19)	3/4 (19)
Liquid Pipe (Connection Size)	In (mm)	3/8 (9.52)	3/8 (9.52)	3/8 (9.52)	3/8 (9.52)	3/8 (9.52)	3/8 (9.52)

WARNING

All field piping must be completed by a licensed technician and must comply with the local and national regulations.
When the system is installed in a small room, measures must be taken to prevent the refrigerant concentration in the room from exceeding the safety limit in the event of refrigerant leakage. If the refrigerant leaks and its concentration exceeds its proper limit, hazards due to lack of oxygen may result.
When installing the refrigeration system, ensure that air, dust, moisture or foreign substances do not enter the refrigerant circuit. Contamination in the system may cause poor operating capacity, high pressure in the refrigeration cycle, explosion or injury.
Ventilate the area immediately if there is refrigerant leakage during the installation.
Leaked refrigerant gas is hazardous. Ensure there is no refrigerant leakage after completing the installation work.

Use the following steps to connect the refrigerant piping:

1. Run the interconnecting piping from the outdoor unit to the indoor unit.
2. Connect the refrigerant piping and drain line outside the indoor unit. Complete the pipe insulation at the flare connection then fasten the piping and wiring to the wall as required. Completely seal the hole in the wall.
3. Cut tubing to correct length.
   When preparing refrigerant pipes, take extra care to cut and flare them properly. This ensures efficient operation and minimizes the need for future maintenance.
   a. Measure the distance between the indoor and outdoor units.
   b. Using a pipe cutter, cut the pipe a little longer than the measured distance.
   c. Ensure the pipe is cut at a perfect 90° angle.

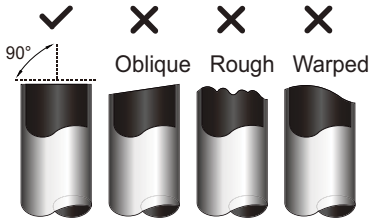

Fig. 34 — Pipe Cutting

4. Remove Burrs
   Burrs can affect the air-tight seal of the refrigerant piping connection. Therefore, they must be completely removed. To remove:
   a. Hold the pipe at a downward angle to prevent burrs from falling into the pipe.
   b. Using a reamer or deburring tool, remove all burrs from the cut section of the pipe.

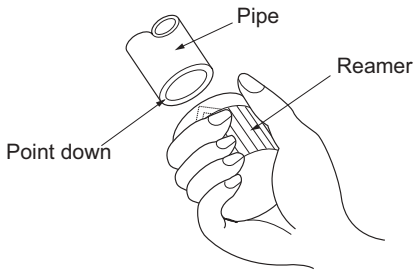

Fig. 35 — Deburring tool

5. Flare Pipe Ends
   Proper flaring is essential to achieving an airtight seal.
   a. After removing the burrs from the cut pipe, seal the ends with PVC tape to prevent foreign materials from entering the pipe.
   b. Sheath the pipe with insulating material.
   c. Place flare nuts on both ends of the pipe. Ensure they are facing the right direction. Once the ends are flared, it is impossible to put them on or change their direction.

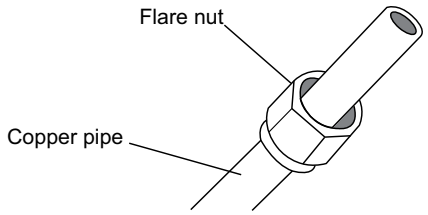

Fig. 36 — Copper pipe and flare nut

d. Remove the PVC tape from ends of pipe when ready to perform the flaring work.

e. Clamp the flare block on the end of the pipe. The end of the pipe must extend beyond the flare form.

f. Place the flaring tool onto the form.

g. Turn the handle of the flaring tool clockwise until the pipe is fully flared. Flare the pipe in accordance with the dimensions in Table 26.

h. Remove the flaring tool and flare block, then inspect the end of the pipe for cracks and even flaring.

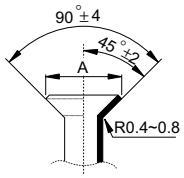

Fig. 37 — Flare Shape

Table 26 — Flare Nut Spacing

Pipe Gauge	Tightening Torque	Flare Dimension (A) (Unit: MM/Inch)	
		Min	Max
3/8 in (Ø9.52)	18-19 ft-lb (25-25 N.m)	0.52/13.2	0.53/13.5
3/4 in (Ø19)	48-49 ft-lb (65-67 N.m)	0.91/23.2	0.93/23.7

6. Connect the copper pipes to the outdoor unit first, then connect the pipes to the indoor unit. Connect the low-pressure pipe first, then connect the high pressure pipe.
7. When connecting the flare nuts, apply a thin coat of refrigeration oil to the flared ends of the pipes.
8. Align the center of the two pipes that you will connect.

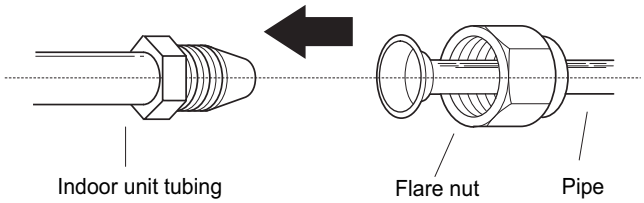

Fig. 38 — Align the center of the two pipes

9. Tighten the flare nut as much as possible by hand.
10. Using a wrench, grip the nut on the unit tubing.
11. While firmly gripping the nut, use a torque wrench to tighten the flare nut (see Table 26).

NOTE: Use both a backup wrench and a torque wrench when connecting or disconnecting pipes to or from the unit.

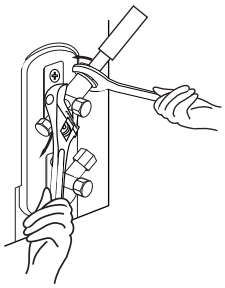

Fig. 39 — Torque wrench with backup wrench

All tubing bends should be performed with a properly sized tubing bender to prevent kinking or damaging the tubing.

12. After connecting the copper pipes to the outdoor unit, wrap the power cable, signal cable and the piping together with binding tape.

NOTE: While bundling these items together, DO NOT intertwine or cross the signal cable with any other wiring.

13. Thread this lineset through the wall to connect to the indoor unit.

14. Refer to the liquid line and gas line connection O.D. sizes in Table 25 based on the model being installed. Cut and deburr the tubing (review "Remove Burrs" on page 43) to prepare it for brazing. Setup the nitrogen apparatus and connect to the outside unit to flow nitrogen while brazing. Braze the tubing and any fittings to obtain a proper seal.

15. Adjust the nitrogen apparatus to pressurize the system. Pressure test the system to a maximum of 500 psig for at least 60 minutes.
16. Insulate suction line completely, including the outdoor unit valves.

⚠ CAUTION

Wrap insulation around the piping. Direct contact with the bare piping may result in burns or frostbite. Ensure the pipe is properly connected. Over tightening may damage the bell mouth and under tightening may lead to leakage.

17. Brazing Adapter (Optional)

When flare to braze adapter is used, follow these steps:

a. Refer to the liquid line and gas line connection O.D. sizes in Table 25 on page 43 based on the model being installed. Cut and deburr the tubing (review "Remove Burrs on page 43.) to prepare it for brazing. Setup the nitrogen apparatus and connect to the outside unit to flow nitrogen while brazing. Braze the tubing and any fittings to obtain a proper seal.

b. Adjust the nitrogen apparatus to pressurize the system. Pressure test the system to a maximum of 500 psig for at least 60 minutes.

c. Insulate suction line completely, including the outdoor unit valves.

NOTE: MINIMUM BEND RADIUS: Carefully bend the tubing in the middle according to Figure 40. DO NOT bend the tubing more than 90° or more than 3 times.

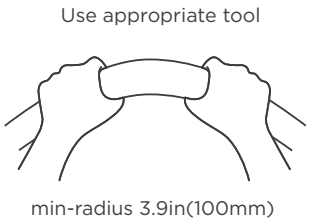

Fig. 40 — Minimum Bend Radius

d. After connecting the copper pipes to the indoor unit, wrap the power cable, signal cable and the piping together with binding tape.

NOTE: DO NOT intertwine or cross the signal cable with any other wiring.

e. Thread this pipeline through the wall and connect it to the outdoor unit.
f. Insulate all the piping, including the valves of the outdoor unit.
g. Open the stop valves of the outdoor unit to start the flow of the refrigerant between the indoor and outdoor unit.

CAUTION

FOR ALL PIPES INSTALLATION

Ensure there is no refrigerant leak after completing the installation work. If there is a refrigerant leak, ventilate the area immediately and evacuate the system (refer to the Air Evacuation section of this manual).

Vertical Installations

These units operate with a negative pressure at the drain connections and a drain trap is **required**. Install the trap as close as possible to the unit. Ensure the top of the trap is below the connection to the drain pan to allow complete drainage of the pan.

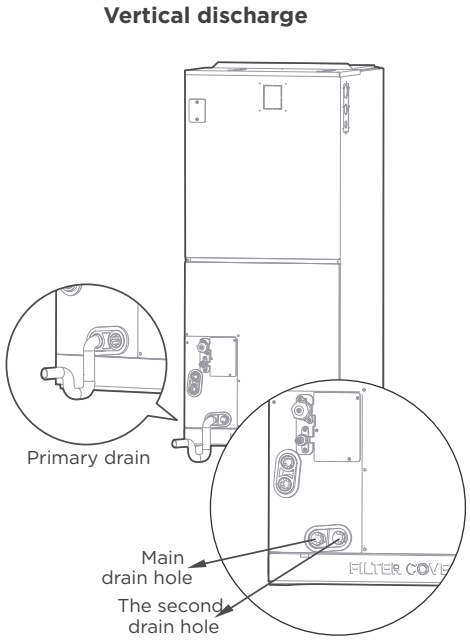

Fig. 41 — Vertical Discharge

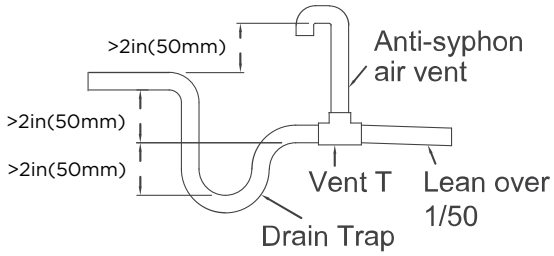

Fig. 42 — Drain Trap

NOTE: Horizontal runs must also have an anti-siphon air vent (standpipe) install ahead of the horizontal run to eliminate air trapping.

NOTE ON DRAINPIPE INSTALLATION

- **Figure 42 shows how to trap or plug all drains during vertical discharge.**
- **Figure 42 shows how to trap or plug all drains during right-hand discharge.**
- **The seal plug are supplied as accessories and should be screwed tightly only by hand.**
- **Incorrect installation could cause water to flow back into the unit and flood.**

CAUTION

The drainpipe outlet should be at least 1.9in(5cm) above the ground. If the outlet touches the ground, the unit may become blocked and malfunction.

REFRIGERANT PIPING CONNECTION

WARNING

All field piping must be completed by a licensed technician and must comply with the local and national regulations.
When the air conditioner is installed in a small room, measures must be taken to prevent the refrigerant concentration in the room from exceeding the safety limit in the event of refrigerant leakage. If the refrigerant leaks and its concentration exceeds its proper limit, hazards due to lack of oxygen may result.
When installing the refrigeration system, ensure that air, dust, moisture or foreign substances do not enter the refrigerant circuit. Contamination in the system may cause poor operating capacity, high pressure in the refrigeration cycle, explosion or injury.
Ventilate the area immediately if there is refrigerant leakage during the installation. Leaked refrigerant gas is both toxic and may be flammable. Ensure there is no refrigerant leakage after completing the installation work.

Pipe Length and Elevation

Table 27 — Maximum Length and Drop Height Based on Models (Unit: ft./m)

CAPACITY (BTU/H)	MAXIMUM PIPING LENGTH		MAXIMUM DROP HEIGHT	
	ft.	m	ft.	m
18K	98.4	30	65.6	20
24K/30K	164	50	82	25
36K/48K/60K	213	65	98.4	30

Ensure that the length of the refrigerant pipe, the number of bends, and the drop height between the indoor and outdoor units meets the requirements (see Table 27).

Table 28 — Pipe Specifications

NAME	MODEL	PIPE SPECIFICATION		REMARK
		LIQUID SIDE	GAS SIDE	
Connecting pipe assembly	18K	Ø3/8in(Ø9.52mm)	Ø3/4in(Ø19mm)	Pipes are not included in the accessories and you need to purchase it separately from the local dealer.
	24K	Ø3/8in(Ø9.52mm)	Ø3/4in(Ø19mm)	
	30K	Ø3/8in(Ø9.52mm)	Ø3/4in(Ø19mm)	
	36K	Ø3/8in(Ø9.52mm)	Ø3/4in(Ø19mm)	
	48K	Ø3/8in(Ø9.52mm)	Ø3/4in(Ø19mm)	
	60K	Ø3/8in(Ø9.52mm)	Ø3/4in(Ø19mm)	

NOTE ON ADDING REFRIGERANT

CAUTION

DO NOT MIX REFRIGERANT TYPES!

Some systems require additional charging depending on pipe lengths. In North America, the standard pipe length is 25ft (7.5m). The refrigerant should be charged from the service port on the outdoor unit's low pressure valve. The additional refrigerant to be charged can be referenced from Outdoor Unit manual.

Table 29 — Liquid Side Diameter

NAME	MODEL	PIPE SPECIFICATION		REMARK
		LIQUID SIDE	GAS SIDE	
Connecting pipe assembly	18K	Ø3/8in(Ø9.52mm)	Ø3/4in(Ø19mm)	Pipes are not included in the accessories and you need to purchase it separately from the local dealer.
	24K	Ø3/8in(Ø9.52mm)	Ø3/4in(Ø19mm)	
	30K	Ø3/8in(Ø9.52mm)	Ø3/4in(Ø19mm)	
	36K	Ø3/8in(Ø9.52mm)	Ø3/4in(Ø19mm)	
	48K	Ø3/8in(Ø9.52mm)	Ø3/4in(Ø19mm)	
	60K	Ø3/8in(Ø9.52mm)	Ø3/4in(Ø19mm)	

TEST RUN

CAUTION

Failure to perform the test run may result in unit damage, property damage, or personal injury.

Before Test Run

A test run must be performed after the entire system has been completely installed. Confirm the following points before performing the test:

a. Indoor and outdoor units are properly installed.
b. Piping and wiring are properly connected.
c. No obstacles near the inlet and outlet of the unit that might cause poor performance or product malfunction.
d. Refrigeration system does not leak.
e. Drainage system is unimpeded and draining to a safe location.
f. Insulation of piping and duct is properly installed.
g. Grounding wires are properly connected.
h. Length of the piping and additional refrigerant capacity have been recorded.
i. Power voltage is the correct voltage for the air conditioner

Test Run Instructions

1. Open both the liquid and gas service valves.
2. Turn on the main power switch and allow the unit to warm up.
3. Set the air conditioner to COOL mode.
4. For the Indoor Unit
   a. Double check to see if the room temperature is being registered correctly.
   b. Ensure the manual buttons on the indoor unit works properly.
   c. Check to see that the drainage system is unimpeded and draining smoothly.
   d. Ensure there is no vibration or abnormal noise during operation.
5. For the Outdoor Unit
   a. Check to see if the refrigeration system is leaking.
   b. Ensure there is no vibration or abnormal noise during operation.
   c. Ensure the wind, noise, and water generated by the unit do not disturb your neighbors or pose a safety hazard.
6. Drainage Test
   a. Ensure the drainpipe flows smoothly. New buildings should perform this test before finishing the ceiling.
   b. Turn on the main power switch and run the air conditioner in COOL mode.
   c. Check to see that the water is discharged. It may take up to one minute before the unit begins to drain depending on the drainpipe.
   d. Ensure that there are no leaks in any of the piping.
   e. Stop the air conditioner. Turn off the main power switch and reinstall the test cover.

NOTE: If the unit malfunctions or does not operate according to your expectations, please refer to the Troubleshooting section of Service Manual before calling customer service.

24V Signal Charts

Table 30 — 24V Signal Chart (Heating and Cooling)

		24V INPUT TERMINAL										
Mode	Priority	G	Y1	Y/Y2	B	W	W1	W2	E/ AUX	DH	Fan speed	Display
OFF	/	0	0	0	0	0	0	0	0	*	OFF	00
FAN	7	1	0	0	*	0	0	0	0	*	Low	01
Cooling stage 1	6	*	1	0	0	0	0	0	0	1	Mid	02
Cooling stage 2		*	*	1	0	0	0	0	0	1	High	03
Dehumidification 1		*	1	0	0	0	0	0	0	0	Low	04
Dehumidification 2		*	*	1	0	0	0	0	0	0	Low	05
Heat pump stage 1	5	*	1	0	1	0	0	0	0	1	Mid	06
Heat pump stage 2		*	*	1	1	0	0	0	0	1	High	07
Heat pump stage 2		*	*	*	*	1	0	0	0	1	High	
Electric auxiliary heat module 1	3	*	0	0	*	0	1	0	0	*	Turbo	08
Electric auxiliary heat module 2		*	0	0	*	0	0	1	0	*	Turbo	
Electric auxiliary heat module 1 and 2		*	0	0	*	0	1	1	0	*	Turbo	09
Heat pump stage 1 + Electric auxiliary heat module 1	4	*	1	0	1	0	1	0	0	1	Turbo	10
Heat pump stage 1 + Electric auxiliary heat module 2		*	1	0	1	0	0	1	0	1	Turbo	
Heat pump stage 2 + Electric auxiliary heat module 1		*	*	1	1	0	1	0	0	1	Turbo	
Heat pump stage 2 + Electric auxiliary heat module 1		*	*	*	*	1	1	0	0	1	Turbo	
Heat pump stage 2 + Electric auxiliary heat module 2		*	*	1	1	0	0	1	0	1	Turbo	
Heat pump stage 2 + Electric auxiliary heat module 2		*	*	*	*	1	0	1	0	1	Turbo	
Heat pump stage 1 + Electric auxiliary heat module 1 and 2		*	1	0	1	0	1	1	0	1	Turbo	11
Heat pump stage 2 + Electric auxiliary heat module 1 and 2		*	*	1	1	0	1	1	0	1	Turbo	
Heat pump stage 2 + Electric auxiliary heat module 1 and 2		*	*	*	*	1	1	1	0	1	Turbo	
Emergency heat	1	*	*	*	*	*	*	*	1	*	Turbo	12

Note:
1: 24V signal
0: No 24V signal
***: 1 or 0.**
The AHU will turn off if the 24V input cannot meet the table.

Table 1 —24V Signal Chart (Cooling Only)

		24V INPUT TERMINAL										
MODE	**PRIORITY**	**G**	**Y1**	**Y/Y2**	**B**	**W**	**W1**	**W2**	**E/AUX**	**DH**	**FAN SPEED**	**DISPLAY**
OFF	/	0	0	0	0	0	0	0	0	*	OFF	00
FAN	7	1	0	0	*	0	0	0	0	*	Low	01
COOLING STAGE 1	6	*	1	0	0	0	0	0	0	1	Mid	02
COOLING STAGE 2		*	*	1	0	0	0	0	0	1	High	03
DEHUMIDIfiCATION 1		*	1	0	0	0	0	0	0	0	Low	04
DEHUMIDIfiCATION 2		*	*	1	0	0	0	0	0	0	Low	05
OFF	5	*	1	0	1	0	0	0	0	*	OFF	00
OFF		*	*	1	1	0	0	0	0	*	OFF	
OFF		*	*	*	*	1	0	0	0	*	OFF	
EMERGENCY HEAT	3	*	0	0	*	0	1	0	0	*	Turbo	12
EMERGENCY HEAT		*	0	0	*	0	0	1	0	*	Turbo	
EMERGENCY HEAT		*	0	0	*	0	1	1	0	*	Turbo	
EMERGENCY HEAT	4	*	1	0	1	0	1	0	0	*	Turbo	
EMERGENCY HEAT		*	1	0	1	0	0	1	0	*	Turbo	
EMERGENCY HEAT		*	*	1	1	0	1	0	0	*	Turbo	
EMERGENCY HEAT		*	*	*	*	1	1	0	0	*	Turbo	
EMERGENCY HEAT		*	*	1	1	0	0	1	0	*	Turbo	
EMERGENCY HEAT		*	*	*	*	1	0	1	0	*	Turbo	
EMERGENCY HEAT		*	1	0	1	0	1	1	0	*	Turbo	
EMERGENCY HEAT		*	*	1	1	0	1	1	0	*	Turbo	
EMERGENCY HEAT		*	*	*	*	1	1	1	0	*	Turbo	
EMERGENCY HEAT	1	*	*	*	*	*	*	*	1	*	Turbo	

Note:
1: 24V signal
0: No 24V signal
*: 1 or 0.
The AHU will turn off if the 24V input cannot meet the table.

WIRING DIAGRAM

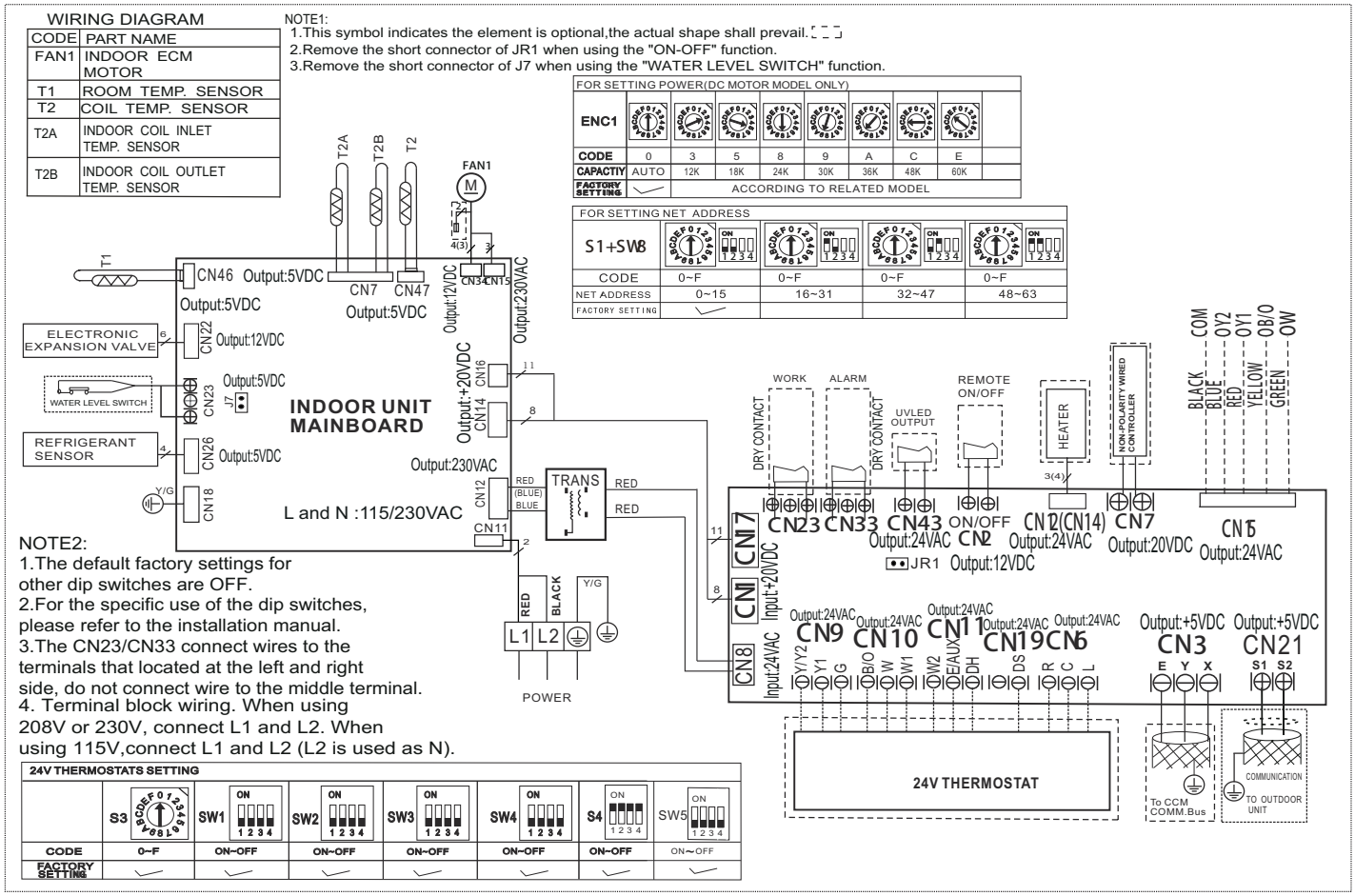

Fig. 43 —Wiring Diagram Sizes 18K - 24K

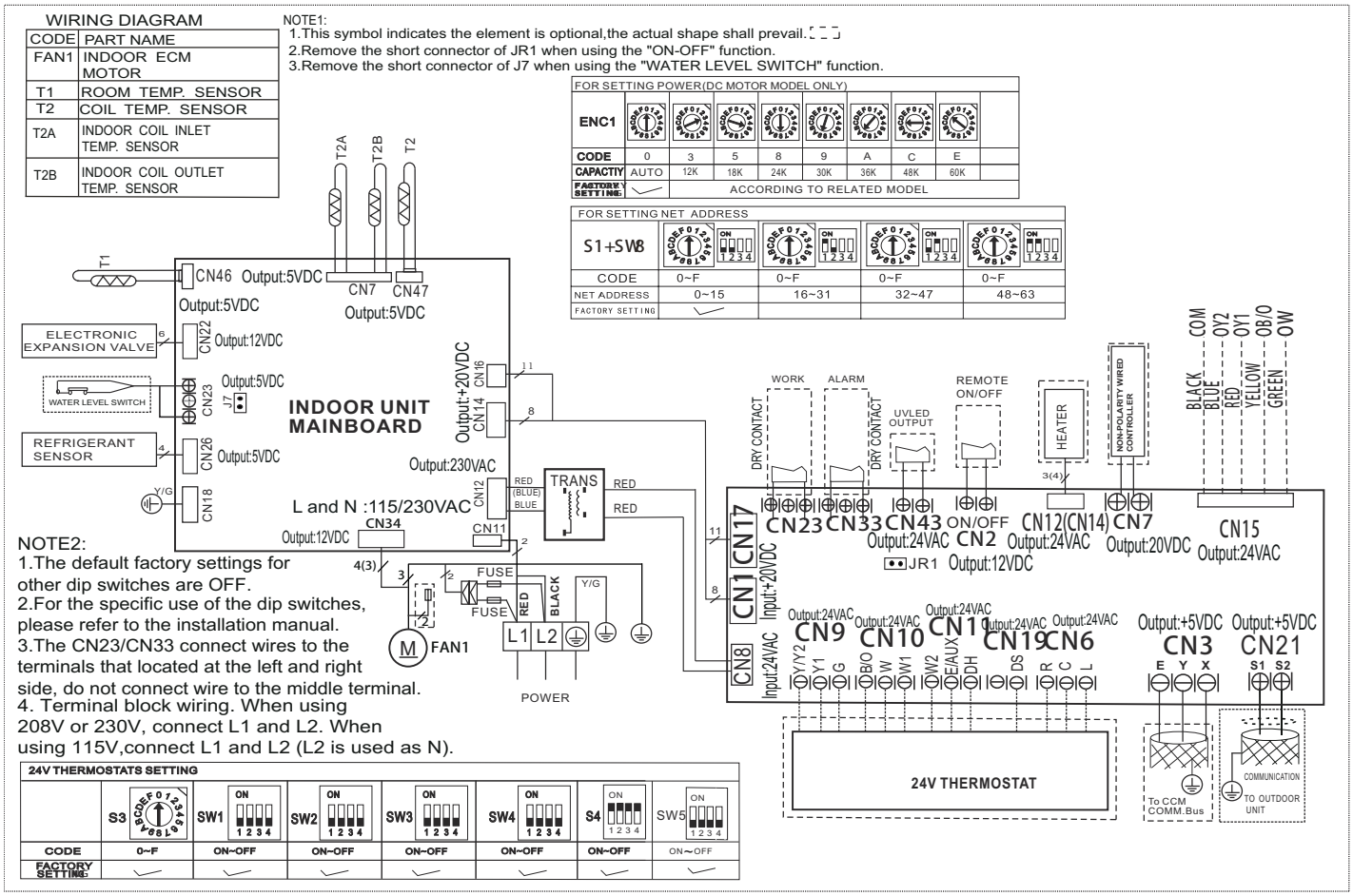

Fig. 44 — Wiring Diagram Sizes 30K, 36K, 48K, 60K

INSTALL ALL POWER, INTERCONNECTING WIRING, AND PIPING TO THE INDOOR UNIT

1. Run interconnecting piping and wiring from the outdoor unit to the indoor unit.
2. Run an interconnecting cable through the hole in wall (outside to inside).
3. Lift the indoor unit into position and route piping and drain through the hole in wall (inside to outside). Fit the interconnecting wiring into the back side of the indoor unit.
4. Put an upper claw at the back of the indoor unit on the upper hook of the mounting plate and move the indoor unit from side to side to ensure it is securely hooked.
5. Open the indoor unit's front cover and remove the field wiring terminal block cover.
6. Pull the interconnecting wire up from the back of indoor unit and position close to the terminal block on the indoor unit.
7. Push the lower part of the indoor unit up on the wall, then move the indoor unit from side to side, up and down to ensure it is hooked securely (see Fig. 19).
8. Connect the wiring from the outdoor unit per the wiring diagrams (see Figure 43 and 44).
9. Replace the field wiring cover and close the indoor unit's front cover.
10. Piping:
    a. Cut the pipe, with a pipe cutter, at 90 degrees (see Fig. 45).
    b. Remove the service connection (if provided with the unit).

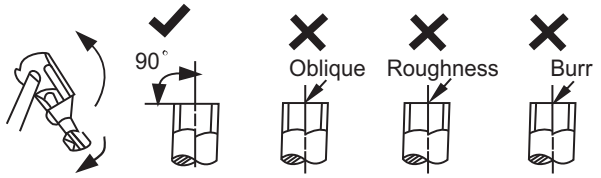

Fig. 45 — Pipe Cutting

    c. Remove all the burrs from the cut cross section of the pipe avoiding any burrs inside the tubes.
    d. Remove the flare nuts attached to the indoor and outdoor units.
    e. Install the correct size flare nut onto the tubing and make the flare connection. Refer to Table e for the flare nut spaces.

WIRELESS REMOTE CONTROLLER INSTALLATION

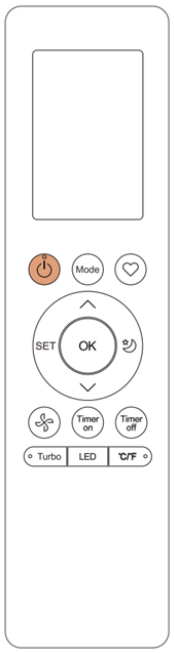

Fig. 46 — Wireless Remote Controller (RG10F8(2)/ BGEFU1)

To attach the mounting bracket:

1. Use the two screws supplied with the wireless remote control to attach the mounting bracket to the wall in a location selected by the customer and within operating range.
2. Install the batteries in the remote control.
3. Place the remote control into the remote control mounting bracket.

NOTE: For remote control operation, refer to the remote control's owners manual.

OPTIONAL WIRED WALL-MOUNTED REMOTE CONTROL INSTALLATION

The wired remote controller comes with the following items:

- A set of installation instructions and owner's manuals
- 3 M4X20 Screws to mount on the wall
- 4 wall plugs to mount on the wall
- 2 M4X25 to mount on switch box
- 2 plastic screw bars to fix on switch box
- 1 set of batteries
- 1 set of connecting wires to connect to indoor unit’s main board

Fig. 47 — Wired Controller

For wired controller set up and installation instructions, consult the wired controller installation manual.

SETTING UP AIRFLOW AND STATIC PRESSURE

Accessing the INQUIRY Mode

⚠ CAUTION

Read and understand the function changes you wish to make in advance. Changes can only be made in the **SERVICE** mode, but to access **SERVICE** mode, the remote must be in the **INQUIRY** mode first. Refer to the Remote Controller Service Mode Set Up instructions to enable the **SERVICE** mode. Neither the indoor unit nor the remote control displays the new level of any of the changes made while in the **INQUIRY** mode. Be sure to document the changes you have made to the system's programming using the **INQUIRY** mode. Once you complete the changes and exit the **INQUIRY** mode, if additional changes are made to the programming, the system will not show the new previously set level(s).

For example, when you first access **CODE 22**, **Heating Temperature Compensation**, the remote control display defaults to **0**. If you change it to **-2,** then save and exit out of the **INQUIRY** mode, the next time someone goes back in and accesses **CODE 22**, the remote’s display will not display **-2**. Instead the display will show **0** because that's the default. If you are unsure of the previous changes, due to a lack of documentation, you could press the **DOWN** symbol to the maximum change range of **-6**, then press the **UP** symbol until you are back to **0**, and make the new adjustments accordingly. Be sure to document the changes when you are done.

Simultaneously press **ON/OFF** and **FAN SPEED** for 8 seconds:

a. The remote is now in the **INQUIRY** mode.
b. The remote control remains in the **INQUIRY** mode for 1 minute if no other button is pressed.
c. While in the **INQUIRY** Mode, the remote display cancels all icons except **AUTO**, **COOL**, **DRY**, **HEAT** and **Battery Strength**.
d. The remote control digital display defaults to **0** upon entering the **INQUIRY** mode.
e. In the **INQUIRY** mode, each digital code (from 0 to 30) is accessed by pressing the **UP** or **DOWN** arrows.
f. The **INQUIRY** information appears on the high wall indoor unit display in approximately 1 second after accessing the digital code. Press **OK** to send as well.
g. In the **INQUIRY** mode, all other buttons and operations are invalid except for **UP**, **DOWN** and **OK** or the operation to exit the **INQUIRY** mode.

Remote Controller Service Mode Set Up

NOTE: While in the INQUIRY mode, refer to the following instructions to enter SERVICE mode for the applicable codes.

Below is a list of **INQUIRY** modes and serviceable functions.

a. Before using the remote’s service functions, turn **OFF** the indoor unit with the remote.
b. Turn **OFF** the power to the outdoor unit for 2 minutes. Turn the power back **ON**.
c. Remove the batteries from the remote and wait for the remote screen to clear. Within 30 seconds of replacing the batteries, use **UP** or **DOWN** to scroll through the **INQUIRY** modes.
d. To enter the **SERVICE** mode for an applicable **INQUIRY** mode, press **ON/OFF** for 2 seconds.
e. After **SERVICE** adjustments have been made, press **ON/OFF** for 2 seconds to exit the **SERVICE** mode and return to the **INQUIRY** mode.
f. Once operations in the **INQUIRY** mode are complete, press **ON/OFF** and **FAN SPEED** for 2 seconds to exit. All buttons on the remote controller are disabled for 60 seconds.
g. To ensure changes are locked, power down the outdoor unit for three (3) minutes after all the service mode changes are made.

FAN PERFORMANCE

Vertical, Horizontal Right, Horizontal Left

Setting of air volume through service mode:

- See “Remote Controller Service Mode Set Up on page 52. to access the **SERVICE** mode through the **INQUIRY** mode.
- Use the **UP** and **DOWN** arrow buttons on the remote, scroll to **CODE 23-Maximum Cooling Fan Speed for Cooling** fan speed changes and **CODE 25-Maximum Heating Fan Speed for Heating Fan Speed** changes.

18K

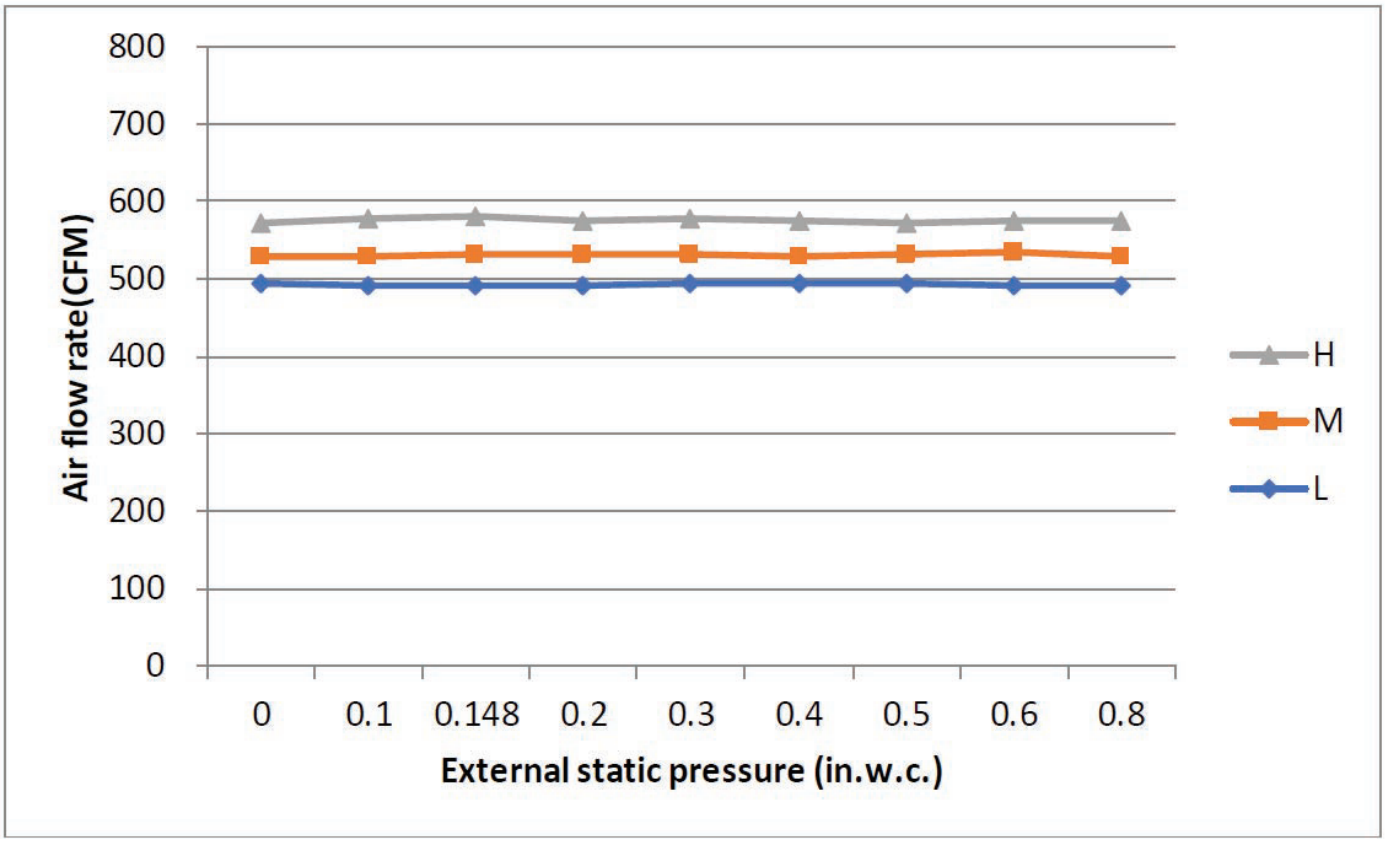

COOLING	Default	-1	-2	-3	-4	-5	-6	-7
TURBO	618	598	578	558	538	518	498	478
HIGH	576	556	536	516	496	476	456	436
MIDDLE	529	509	489	469	449	429	418	418
LOW	488	468	448	428	408	400	400	400
COOLING	Default	-8	-9 ~ -40	+1	+2	+3	+4	+5 ~ +20
TURBO	618	458	453	635	635	635	635	635
HIGH	576	435	435	596	616	618	618	618
MIDDLE	529	418	418	549	569	589	600	600
LOW	488	400	400	508	528	548	568	582

HEATING	Default	-1	-2	-3	-4	-5	-6 ~ -40	+1	+2
TURBO	565	545	525	505	485	465	453	585	605
HIGH	541	521	501	481	461	441	435	561	581
MIDDLE	435	418	418	418	418	418	418	455	475
LOW	400	400	400	400	400	400	400	420	440
HEATING	Default	+3	+4	+5	+6	+7	+8	+9	+10~+20
TURBO	565	625	635	635	635	635	635	635	635
HIGH	541	601	618	618	618	618	618	618	618
MIDDLE	435	495	515	535	555	575	595	600	600
LOW	400	460	480	500	520	540	560	580	582

Manufacturer reserves the right to change, at any time, specifications and designs without notice and without obligations.

24K

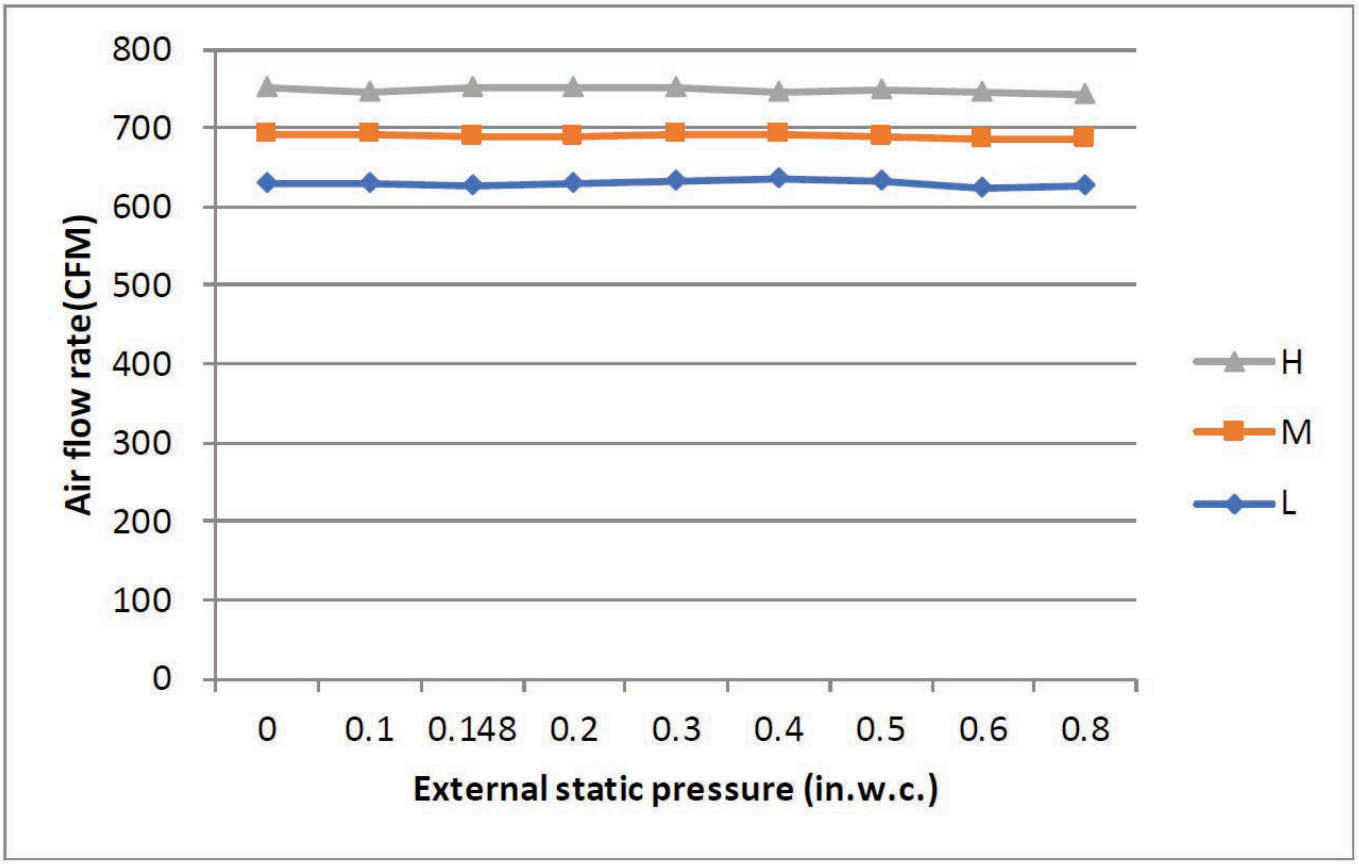

COOLING	Default	-1	-2	-3	-4	-5	-6	-7	-8	-9	-10
TURBO	988	804	784	764	744	724	704	684	664	644	624
HIGH	894	739	719	699	679	659	639	619	599	579	559
MIDDLE	806	674	654	634	614	594	574	554	534	514	494
LOW	712	609	589	569	549	529	509	489	469	449	429
COOLING	Default	-11	-12	-13	-14	-15	-16	-17	-18	-19~-40	+1
TURBO	988	604	584	564	544	524	504	484	464	453	844
HIGH	894	539	519	499	479	459	439	435	435	435	779
MIDDLE	806	474	454	434	418	418	418	418	418	418	714
LOW	712	409	400	400	400	400	400	400	400	400	649
COOLING	Default	+2	+3	+4	+5	+6	+7	+8	+9~+20		
TURBO	988	853	853	853	853	853	853	853	853		
HIGH	894	799	819	835	835	835	835	835	835		
MIDDLE	806	734	754	774	794	814	818	818	818		
LOW	712	669	689	709	729	749	769	789	800		

HEATING	Default	-1	-2	-3	-4	-5	-6	-7	-8	-9	-10	-11
TURBO	788	768	748	728	708	688	668	648	628	608	588	568
HIGH	753	733	713	693	673	653	633	613	593	573	553	533
MIDDLE	641	621	601	581	561	541	521	501	481	461	441	421
LOW	524	504	484	464	444	424	404	400	400	400	400	400
HEATING	Default	-12	-13	-14	-15	-16	-17~-40	+1	+2	+3	+4	+5
TURBO	788	548	528	508	488	468	453	808	828	848	853	853
HIGH	753	513	493	473	453	435	435	773	793	813	833	835
MIDDLE	641	418	418	418	418	418	418	661	681	701	721	741
LOW	524	400	400	400	400	400	400	544	564	584	604	624
HEATING	Default	+6	+7	+8	+9	+10	+11	+12	+13	+14~+20		
TURBO	788	853	853	853	853	853	853	853	853	853		
HIGH	753	835	835	835	835	835	835	835	835	835		
MIDDLE	641	761	781	801	818	818	818	818	818	818		
LOW	524	644	664	684	704	724	744	764	784	800		

Manufacturer reserves the right to change, at any time, specifications and designs without notice and without obligations.

30K

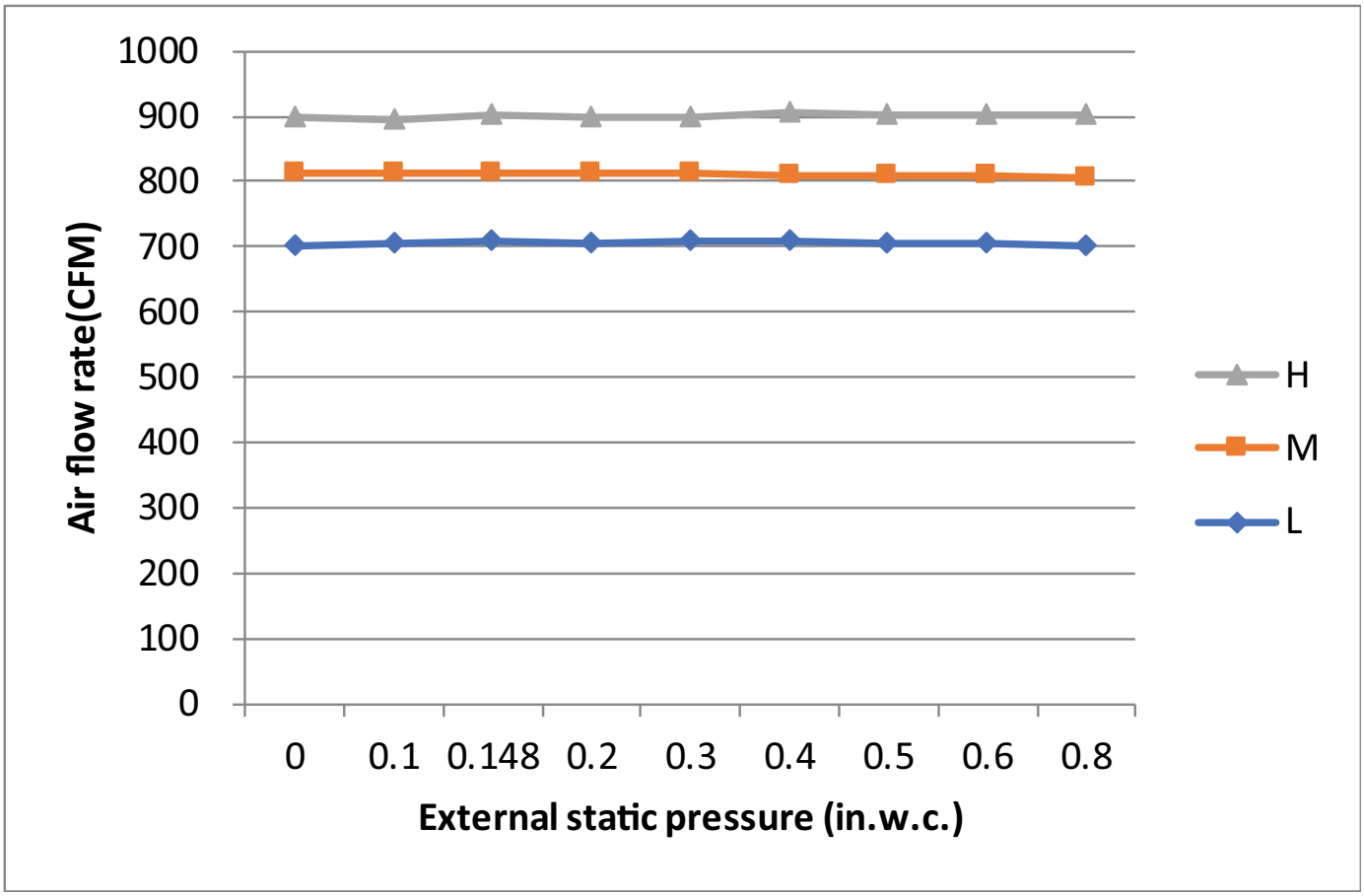

COOLING	Default	-1	-2	-3	-4	-5	-6	-7	-8	-9	-10	-11
TURBO	988	968	948	928	908	888	868	848	828	808	788	768
HIGH	894	874	854	834	814	794	774	754	734	714	694	674
MIDDLE	806	786	766	746	726	706	686	666	646	626	606	586
LOW	712	692	672	652	632	612	592	572	552	532	512	492
COOLING	Default	-12	-13	-14	-15	-16	-17	-18	-19	-20	-21	-22
TURBO	988	748	728	708	688	668	648	628	608	588	568	548
HIGH	894	654	634	614	594	574	554	534	514	494	474	454
MIDDLE	806	566	546	526	506	486	466	446	426	418	418	418
LOW	712	472	452	432	412	400	400	400	400	400	400	400
COOLING	Default	-23	-24	-25	-26	+1	+2	+3	+4	+5	+6	+7
TURBO	988	528	508	488	468	988	1008	1028	1048	1068	1071	1071
HIGH	894	435	435	435	435	894	914	934	954	974	994	1014
MIDDLE	806	418	418	418	418	806	826	846	866	886	906	926
LOW	712	400	400	400	400	712	732	752	772	792	812	832
COOLING	Default	+8	+9	+10	+11	+12	+13	+14	+15	+16	+17~+20	
TURBO	988	1071	1071	1071	1071	1071	1071	1071	1071	1071	1071	
HIGH	894	1034	1053	1053	1053	1053	1053	1053	1053	1053	1053	
MIDDLE	806	946	966	986	1006	1026	1035	1035	1035	1035	1035	
LOW	712	852	872	892	912	932	952	972	992	1012	1018	

Manufacturer reserves the right to change, at any time, specifications and designs without notice and without obligations.

30K (CONT)

HEATING	Default	-1	-2	-3	-4	-5	-6	-7	-8	-9	-10
TURBO	918	898	878	858	838	818	798	778	758	738	718
HIGH	876	856	836	816	796	776	756	736	716	696	676
MIDDLE	665	645	625	605	585	565	545	525	505	485	465
LOW	453	433	413	400	400	400	400	400	400	400	400
HEATING	Default	-11	-12	-13	-14	-15	-16	-17	-18	-19	-20
TURBO	918	698	678	658	638	618	598	578	558	538	518
HIGH	876	656	636	616	596	576	556	536	516	496	476
MIDDLE	665	445	425	418	418	418	418	418	418	418	418
LOW	453	400	400	400	400	400	400	400	400	400	400
HEATING	Default	-21	-22	-23	-24~-40	+1	+2	+3	+4	+5	+6
TURBO	918	498	478	458	453	938	958	978	998	1018	1038
HIGH	876	456	436	435	435	896	916	936	956	976	996
MIDDLE	665	418	418	418	418	685	705	725	745	765	785
LOW	453	400	400	400	400	473	493	513	533	553	573
HEATING	Default	+7	+8	+9	+10	+11	+12	+13	+14~+20		
TURBO	918	1058	1071	1071	1071	1071	1071	1071	1071		
HIGH	876	1016	1036	1053	1053	1053	1053	1053	1053		
MIDDLE	665	805	825	845	865	885	905	925	945		
LOW	453	593	613	633	653	673	693	713	733		

Manufacturer reserves the right to change, at any time, specifications and designs without notice and without obligations.

36K

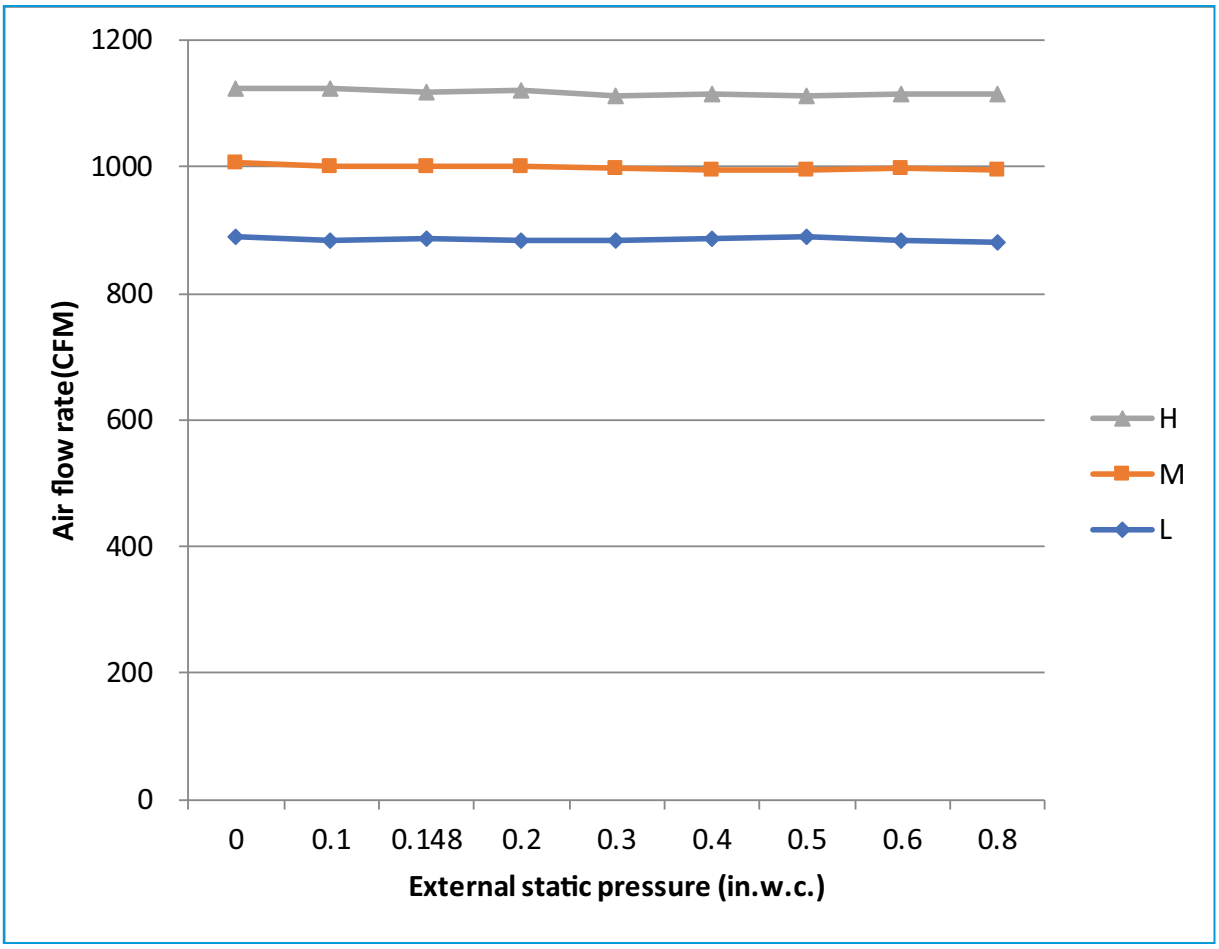

COOLING	Default	-1	-2	-3	-4	-5	-6	-7	-8	-9	-10	-11	-12
TURBO	1188	1168	1148	1128	1108	1088	1068	1048	1028	1008	988	968	948
HIGH	1082	1062	1042	1022	1002	982	962	942	922	902	882	862	842
MIDDLE	971	951	931	911	891	871	851	831	811	791	771	751	731
LOW	865	845	825	805	785	765	745	725	705	685	665	645	625
COOLING	Default	-13	-14	-15	-16	-17	-18	-19	-20	-21	-22	-23	-24
TURBO	1188	928	908	888	868	848	828	808	788	768	748	728	708
HIGH	1082	822	802	782	762	742	722	702	682	662	642	622	602
MIDDLE	971	711	691	671	651	631	611	591	571	551	531	511	491
LOW	865	605	585	565	545	525	505	485	465	445	425	405	400
COOLING	Default	-25	-26	-27	-28	-29	-30	-31	-32	-33	-34	-35	-36
TURBO	1188	688	668	648	628	608	588	568	548	528	508	488	468
HIGH	1082	582	562	542	522	502	482	462	442	435	435	435	435
MIDDLE	971	471	451	431	418	418	418	418	418	418	418	418	418
LOW	865	400	400	400	400	400	400	400	400	400	400	400	400
COOLING	Default	-37~-40	+1	+2	+3	+4	+5	+6	+7	+8	+9	+10	+11
TURBO	1188	453	1208	1228	1248	1268	1288	1288	1288	1288	1288	1288	1288
HIGH	1082	435	1102	1122	1142	1162	1182	1202	1222	1242	1262	1271	1271
MIDDLE	971	418	991	1011	1031	1051	1071	1091	1111	1131	1151	1171	1191
LOW	865	400	885	905	925	945	965	985	1005	1025	1045	1065	1085
COOLING	Default	+12	+13	+14	+15	+16	+17	+18	+19~+20				
TURBO	1188	1288	1288	1288	1288	1288	1288	1288	1288				
HIGH	1082	1271	1271	1271	1271	1271	1271	1271	1271				
MIDDLE	971	1211	1231	1251	1253	1253	1253	1253	1253				
LOW	865	1105	1125	1145	1165	1185	1205	1225	1235				

Manufacturer reserves the right to change, at any time, specifications and designs without notice and without obligations.

36K CONT

HEATING	Default	-1	-2	-3	-4	-5	-6	-7	-8	-9	-10	-11
TURBO	1112	1092	1072	1052	1032	1012	992	972	952	932	912	892
HIGH	1059	1039	1019	999	979	959	939	919	899	879	859	839
MIDDLE	794	774	754	734	714	694	674	654	634	614	594	574
LOW	582	562	542	522	502	482	462	442	422	402	400	400
HEATING	Default	-12	-13	-14	-15	-16	-17	-18	-19	-20	-21	-22
TURBO	1112	872	852	832	812	792	772	752	732	712	692	672
HIGH	1059	819	799	779	759	739	719	699	679	659	639	619
MIDDLE	794	554	534	514	494	474	454	434	418	418	418	418
LOW	582	400	400	400	400	400	400	400	400	400	400	400
HEATING	Default	-23	-24	-25	-26	-27	-28	-29	-30	-31	-32	-33~-40
TURBO	1112	652	632	612	592	572	552	532	512	492	472	453
HIGH	1059	599	579	559	539	519	499	479	459	439	435	435
MIDDLE	794	418	418	418	418	418	418	418	418	418	418	418
LOW	582	400	400	400	400	400	400	400	400	400	400	400
HEATING	Default	+1	+2	+3	+4	+5	+6	+7	+8	+9	+10	+11
TURBO	1112	1132	1152	1172	1192	1212	1232	1252	1272	1288	1288	1288
HIGH	1059	1079	1099	1119	1139	1159	1179	1199	1219	1239	1259	1271
MIDDLE	794	814	834	854	874	894	914	934	954	974	994	1014
LOW	582	602	622	642	662	682	702	722	742	762	782	802
HEATING	Default	+12	+13	+14	+15	+16	+17	+18	+19	+20		
TURBO	1112	1288	1288	1288	1288	1288	1288	1288	1288	1288		
HIGH	1059	1271	1271	1271	1271	1271	1271	1271	1271	1271		
MIDDLE	794	1034	1054	1074	1094	1114	1134	1154	1174	1194		
LOW	582	822	842	862	882	902	922	942	962	982		

Manufacturer reserves the right to change, at any time, specifications and designs without notice and without obligations.

48K

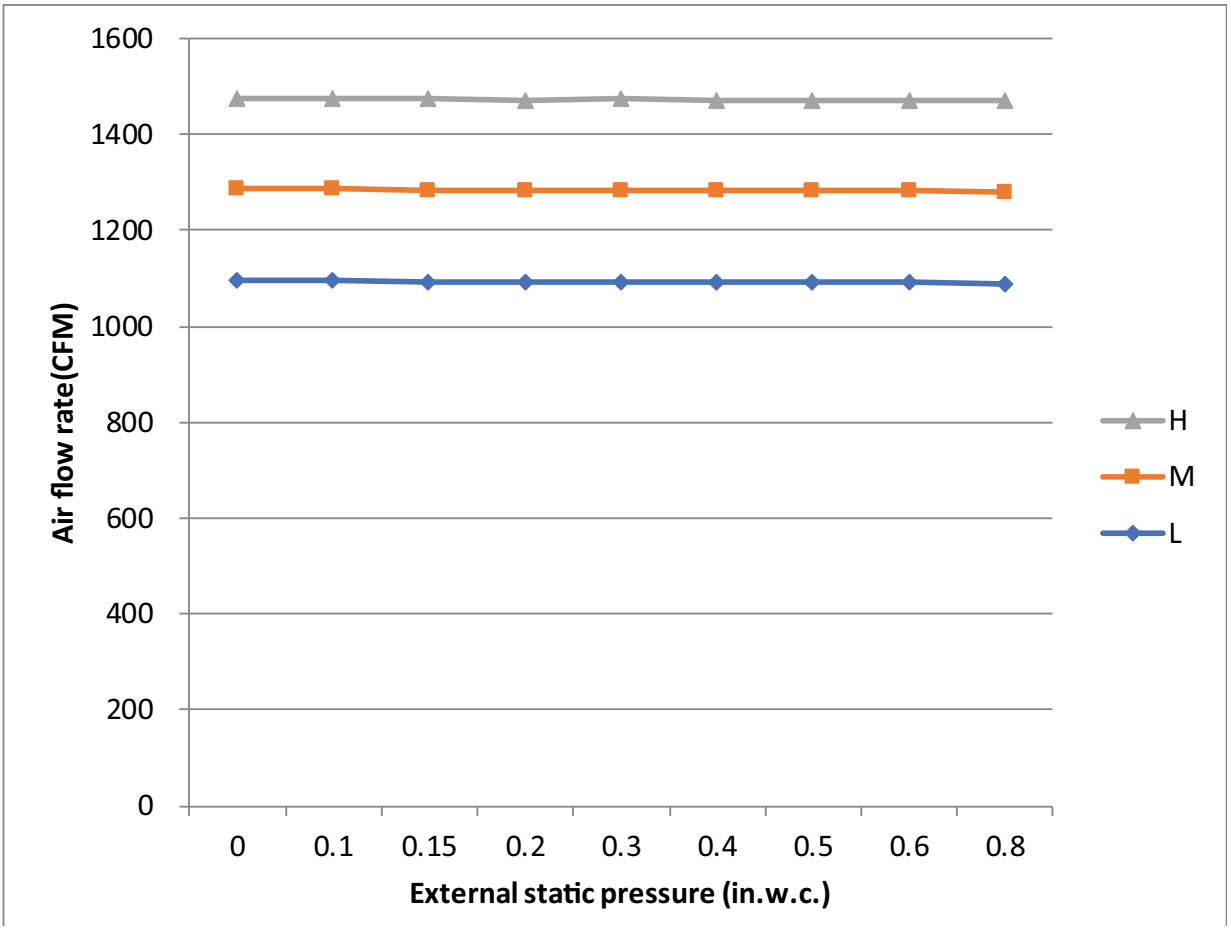

COOLING	Default	-1	-2	-3	-4	-5	-6	-7	-8	-9	-10
TURBO	1600	1566	1532	1498	1464	1430	1396	1362	1328	1294	1260
HIGH	1471	1437	1403	1369	1335	1301	1267	1233	1199	1165	1131
MIDDLE	1282	1248	1214	1180	1146	1112	1078	1044	1010	976	942
LOW	1094	1060	1026	992	958	924	890	856	822	790	790
COOLING	Default	-11	-12	-13	-14	-15	-16	-17	-18	-19	-20
TURBO	1600	1226	1192	1158	1124	1090	1056	1022	988	954	920
HIGH	1471	1097	1063	1029	995	961	927	893	859	850	850
MIDDLE	1282	908	874	840	820	820	820	820	820	820	820
LOW	1094	790	790	790	790	790	790	790	790	790	790
COOLING	Default	-21	-22	-23	-24	-25	-26	-27	-28	-29	-30
TURBO	1600	880	880	880	880	880	880	880	880	880	880
HIGH	1471	850	850	850	850	850	850	850	850	850	850
MIDDLE	1282	820	820	820	820	820	820	820	820	820	820
LOW	1094	790	790	790	790	790	790	790	790	790	790
COOLING	Default	-31	-32	-33	-34	-35	-36	-37	-38	-39	-40
TURBO	1600	880	880	880	880	880	880	880	880	880	886
HIGH	1471	850	850	850	850	850	850	850	850	850	850
MIDDLE	1282	820	820	820	820	820	820	820	820	820	820
LOW	1094	790	790	790	790	790	790	790	790	790	790
COOLING	Default	+1	+2	+3	+4	+5	+6	+7	+8	+9	+10
TURBO	1600	1634	1668	1702	1736	1770	1804	1838	1872	1906	1940
HIGH	1471	1505	1539	1573	1607	1641	1675	1709	1743	1777	1811
MIDDLE	1282	1316	1350	1384	1418	1452	1486	1520	1554	1588	1622
LOW	1094	1128	1162	1196	1230	1264	1298	1332	1366	1400	1434
COOLING	Default	+11	+12	+13	+14	+15	+16	+17	+18	+19	+20
TURBO	1600	1974	2008	2042	2076	2110	2144	2178	2212	2246	2280
HIGH	1471	1845	1879	1913	1947	1981	2015	2049	2083	2117	2151
MIDDLE	1282	1656	1690	1724	1758	1792	1826	1860	1894	1928	1962
LOW	1094	1468	1502	1536	1570	1604	1638	1672	1706	1740	1774

Manufacturer reserves the right to change, at any time, specifications and designs without notice and without obligations.

48K CONT

HEATING	Default	-1	-2	-3	-4	-5	-6	-7	-8	-9	-10
TURBO	1600	1566	1532	1498	1464	1430	1396	1362	1328	1294	1260
HIGH	1382	1348	1314	1280	1246	1212	1178	1144	1110	1076	1042
MIDDLE	1141	1107	1073	1039	1005	971	937	903	869	835	820
LOW	977	943	909	875	841	807	790	790	790	790	790
HEATING	Default	-11	-12	-13	-14	-15	-16	-17	-18	-19	-20
TURBO	1600	1226	1192	1158	1124	1090	1056	1022	988	954	920
HIGH	1382	1008	974	940	906	872	850	850	850	850	850
MIDDLE	1141	820	820	820	820	820	820	820	820	820	820
LOW	977	790	790	790	790	790	790	790	790	790	790
HEATING	Default	-21	-22	-23	-24	-25	-26	-27	-28	-29	-30
TURBO	1600	886	880	880	880	880	880	880	880	880	880
HIGH	1382	850	850	850	850	850	850	850	850	850	850
MIDDLE	1141	820	820	820	820	820	820	820	820	820	820
LOW	977	790	790	790	790	790	790	790	790	790	790
HEATING	Default	-31	-32	-33	-34	-35	-36	-37	-38	-39	-40
TURBO	1600	880	880	880	880	880	880	880	880	880	880
HIGH	1382	850	850	850	850	850	850	850	850	850	850
MIDDLE	1141	820	820	820	820	820	820	820	820	820	820
LOW	977	790	790	790	790	790	790	790	790	790	790
HEATING	Default	+1	+2	+3	+4	+5	+6	+7	+8	+9	+10
TURBO	1600	1634	1668	1702	1736	1770	1804	1838	1872	1906	1940
HIGH	1382	1416	1450	1484	1518	1552	1586	1620	1654	1688	1722
MIDDLE	1141	1175	1209	1243	1277	1311	1345	1379	1413	1447	1481
LOW	977	1011	1045	1079	1113	1147	1181	1215	1249	1283	1317
HEATING	Default	+11	+12	+13	+14	+15	+16	+17	+18	+19	+20
TURBO	1600	1974	2008	2042	2076	2110	2144	2178	2212	2246	2280
HIGH	1382	1756	1790	1824	1858	1892	1926	1960	1994	2028	2062
MIDDLE	1141	1515	1549	1583	1617	1651	1685	1719	1753	1787	1821
LOW	977	1351	1385	1419	1453	1487	1521	1555	1589	1623	1657

Manufacturer reserves the right to change, at any time, specifications and designs without notice and without obligations.

60K

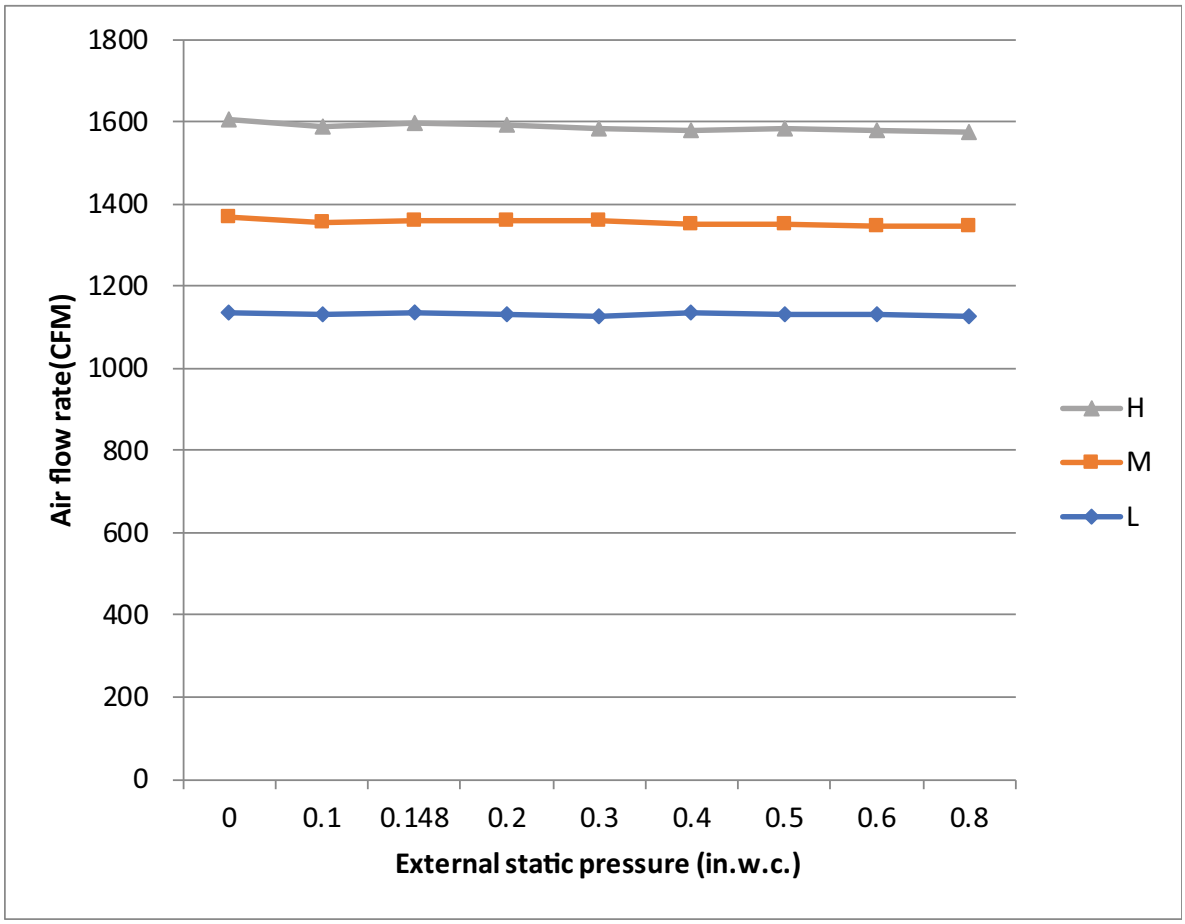

COOLING	Default	-1	-2	-3	-4	-5	-6	-7	-8	-9	-10
TURBO	1806	1786	1766	1746	1726	1706	1686	1666	1646	1626	1606
HIGH	1582	1562	1542	1522	1502	1482	1462	1442	1422	1402	1382
MIDDLE	1359	1339	1319	1299	1279	1259	1239	1219	1199	1179	1159
LOW	1135	1115	1095	1075	1055	1035	1015	995	975	955	935
COOLING	Default	-11	-12	-13	-14	-15	-16	-17	-18	-19	-20
TURBO	1806	1586	1566	1546	1526	1506	1486	1466	1446	1426	1406
HIGH	1582	1362	1342	1322	1302	1282	1262	1242	1222	1202	1182
MIDDLE	1359	1139	1119	1099	1079	1059	1039	1019	999	979	959
LOW	1135	915	895	875	855	835	815	795	775	755	735
COOLING	Default	-21	-22	-23	-24	-25	-26	-27	-28	-29	-30
TURBO	1806	1386	1366	1346	1326	1306	1286	1266	1246	1226	1206
HIGH	1582	1162	1142	1122	1102	1082	1062	1042	1022	1002	982
MIDDLE	1359	939	919	899	879	859	839	819	799	779	759
LOW	1135	715	695	694	694	694	694	694	694	694	694
COOLING	Default	-31	-32	-33	-34	-35	-36	-37	-38	-39	-40
TURBO	1806	1186	1166	1146	1126	1106	1086	1066	1046	1026	1006
HIGH	1582	962	942	922	902	882	862	842	822	802	782
MIDDLE	1359	739	719	712	712	712	712	712	712	712	712
LOW	1135	694	694	694	694	694	694	694	694	694	694
COOLING	Default	+1	+2	+3	+4	+5	+6	+7	+8	+9	+10
TURBO	1806	1826	1846	1866	1886	1906	1926	1946	1966	1986	2006
HIGH	1582	1602	1622	1642	1662	1682	1702	1722	1742	1762	1782
MIDDLE	1359	1379	1399	1419	1439	1459	1479	1499	1519	1539	1559
LOW	1135	1155	1175	1195	1215	1235	1255	1275	1295	1315	1335
COOLING	Default	+11	+12	+13	+14	+15	+16	+17	+18	+19	+20
TURBO	1806	2026	2046	2066	2086	2106	2126	2146	2153	2153	2153
HIGH	1582	1802	1822	1842	1862	1882	1902	1922	1942	1962	1982
MIDDLE	1359	1579	1599	1619	1639	1659	1679	1699	1719	1739	1759
LOW	1135	1355	1375	1395	1415	1435	1455	1475	1495	1515	1535

Manufacturer reserves the right to change, at any time, specifications and designs without notice and without obligations.

60K CONT

HEATING	Default	-1	-2	-3	-4	-5	-6	-7	-8	-9	-10
TURBO	1659	1639	1619	1599	1579	1559	1539	1519	1499	1479	1459
HIGH	1582	1562	1542	1522	1502	1482	1462	1442	1422	1402	1382
MIDDLE	1247	1227	1207	1187	1167	1147	1127	1107	1087	1067	1047
LOW	976	956	936	916	896	876	856	836	816	796	776
HEATING	Default	-11	-12	-13	-14	-15	-16	-17	-18	-19	-20
TURBO	1659	1439	1419	1399	1379	1359	1339	1319	1299	1279	1259
HIGH	1582	1362	1342	1322	1302	1282	1262	1242	1222	1202	1182
MIDDLE	1247	1027	1007	987	967	947	927	907	887	867	847
LOW	976	756	736	716	696	694	694	694	694	694	694
HEATING	Default	-21	-22	-23	-24	-25	-26	-27	-28	-29	-30
TURBO	1659	1239	1219	1199	1179	1159	1139	1119	1099	1079	1059
HIGH	1582	1162	1142	1122	1102	1082	1062	1042	1022	1002	982
MIDDLE	1247	827	807	787	767	747	727	712	712	712	712
LOW	976	694	694	694	694	694	694	694	694	694	694
HEATING	Default	-31	-32	-33	-34	-35	-36	-37	-38	-39	-40
TURBO	1659	1039	1019	999	979	959	939	919	899	879	859
HIGH	1582	962	942	922	902	882	862	842	822	802	782
MIDDLE	1247	712	712	712	712	712	712	712	712	712	712
LOW	976	694	694	694	694	694	694	694	694	694	694
HEATING	Default	+1	+2	+3	+4	+5	+6	+7	+8	+9	+10
TURBO	1659	1679	1699	1719	1739	1759	1779	1799	1819	1839	1859
HIGH	1582	1602	1622	1642	1662	1682	1702	1722	1742	1762	1782
MIDDLE	1247	1267	1287	1307	1327	1347	1367	1387	1407	1427	1447
LOW	976	996	1016	1036	1056	1076	1096	1116	1136	1156	1176
HEATING	Default	+11	+12	+13	+14	+15	+16	+17	+18	+19	+20
TURBO	1659	1879	1899	1919	1939	1959	1979	1999	2019	2039	2059
HIGH	1582	1802	1822	1842	1862	1882	1902	1922	1942	1962	1982
MIDDLE	1247	1467	1487	1507	1527	1547	1567	1587	1607	1627	1647
LOW	976	1196	1216	1236	1256	1276	1296	1316	1336	1356	1376

Manufacturer reserves the right to change, at any time, specifications and designs without notice and without obligations.

TROUBLESHOOTING

Table 2 — Error Codes

DISPLAY	MALFUNCTION AND PROTECTION INDICATION
EC07	ODU fan speed out of control
EC0d	ODU malfunction
EC51	ODU EEPROM parameter error
EC52	ODU coil temp sensor error
EC53	ODU ambient temp sensor error
EC54	COMP. discharge temp sensor error
EC56	IDU coil outlet temp sensor error
ECC1	Other IDU refrigerant sensor detects leakage (multi-zone)
EH00	IDU EEPROM malfunction
EH03	IDU fan speed out of control
EH0A	IDU EEPROM parameter error
EH0b	IDU main control and display boards communication error
EH0E	Water-level alarm malfunction
EH3A	External fan DC bus voltage is too low protection
EH3b	External fan DC bus voltage is too high fault
EH60	IDU room temp. sensor (T1) error
EH61	IDU coil temp. sensor (T2) error
EH62/ EH66	Evaporator coil inlet temp. sensor (T2B) is in open circuit or short circuit
EH65	Evaporator coil inlet temp. sensor (T2A) is in open ciruit or short circuit
EHbA	Communication error between indoor unit and external fan module
EHb3	Communication malfunction between wire and master control
EHC1	Refrigerant sensor detects leakage
EHC2	Refrigerant sensor is out of range and leakage is detected
EHC3	Refrigerant sensor is out of range
EL01	IDU & ODU communication error
ELOC	System lacks refrigerant
EL16	Communication malfunction between adapter board and outdoor main board
FHCC	Refrigerant sensor error
FL09	Mismatch between the new and old platforms
PC00	ODU IPM module protection
PC01	ODU voltage protection
PC02	Compressor top (or IPM) temp. protection
PC03	Pressure protection (low or high pressure)
PC04	Inverter compressor drive error
PCOL	Low ambient temp. protection
----	IDUs mode conflict
NOTE: The digital tube will show DF in defrost mode and FC in forced cooling mode. DF and FC are not error codes.	

Table 3 — Refrigerant Leak Detection Error Codes

EHC1	Refrigerant Sensor detects a leak
EHC2	Working condition of the refrigerant sensor is out of range and a leak is detected

If **you receive one of the codes in Table 3, call a technician as soon as possible. No need to panic, the unit goes into TURBO mode until the error code clears. There is a "beeping" noise coming from the indoor unit, which is normal in this case.**

For additional diagnostic information, refer to the Service Manual.

COMMON ISSUES

Table 4 — Common Issues

ISSUE	POSSIBLE CAUSE
Unit does not turn on when pressing **ON/OFF**.	The Unit has a 3-minute protection feature that prevents the unit from overloading. The unit cannot be restarted within three minutes of being turned off.
The unit changes from **COOL/HEAT** mode to **FAN** mode	The unit may change its setting to prevent frost from forming on the unit. Once the temperature increases, the unit starts operating in the previously selected mode again. The set temperature has been reached, at which point the unit turns o the compressor. The unit continues operating when the temperature fluctuates again.
The indoor unit emits white mist	In humid regions, a large temperature difference between the room's air and the conditioned air can cause white mist.
Both the indoor and outdoor units emit white mist	When the unit restarts in **HEAT** mode after defrosting, white mist may be emitted due to moisture generated from the defrosting process.
The indoor unit makes noises	A rushing air sound may occur when the louver resets its position. A squeaking sound may occur after running the unit in **HEAT** mode due to expansion and contraction of the unit's plastic parts.
Both the indoor unit and outdoor unit make noises	Low hissing sound during operation: This is normal and is caused by refrigerant gas flowing through both indoor and outdoor units.
	Low hissing sound when the system starts, has just stopped running, or is defrosting: This noise is normal and is caused by the refrigerant gas stopping or changing direction.
	Squeaking sound: Normal expansion and contraction of plastic and metal parts caused by temperature changes during operation can cause squeaking noises.
The outdoor unit makes noises	The unit makes different sounds based on its current operating mode.
Dust is emitted from either the indoor or outdoor unit	The unit may accumulate dust during extended periods of non-use, which emits when the unit is turned on. This can be mitigated by covering the unit during long periods of inactivity.
The unit emits a bad odor	The unit may absorb odors from the environment (such as furniture, cooking, cigarettes, etc.) which emit during operations.
	The unit's filters have become moldy and should be cleaned.
The fan of the outdoor unit does not operate	During operation, the fan speed is controlled to optimize product operation.
Operation is erratic, unpredictable, or unit is unresponsive	Interference from cell phone towers and remote boosters may cause the unit to malfunction. In this case, try the following: • Disconnect the power, then reconnect. • Press **ON/OFF** on the remote control to restart operation.

NOTE: If problem persists, contact a local dealer or your nearest customer service center. Provide them with a detailed description of the unit malfunction as well as your model number.

⚠ CAUTION

When troubles occur, check the following points before contacting a repair company.

Table 5 — Common Issues

PROBLEM	POSSIBLE CAUSES	SOLUTION
Poor Cooling Performance	Temperature setting may be higher than ambient room temperature	Lower the temperature setting
	The heat exchanger on the indoor or outdoor unit is dirty	Use Clean function by remote control to clean the affected heat exchanger
	The air filter is dirty	Remove the filter and clean it according to instructions
	The air inlet or outlet of either unit is blocked	Turn the unit off, remove the obstruction and turn it back on
	Doors and windows are open	Make sure that all doors and windows are closed while operating the unit
	Excessive heat is generated by sunlight	Close windows and curtains during periods of high heat or bright sunshine
	Too many sources of heat in the room (people, computers, electronics, etc.)	Reduce amount of heat sources
	Low refrigerant due to leak or long-term use	Check for leaks, re-seal if necessary and top off refrigerant
	SILENCE function is activated (optional function)	**SILENCE** function can lower product performance by reducing operating frequency. Turn off **SILENCE** function.
The unit is not working	Power failure	Wait for the power to be restored
	The power is turned off	Turn on the power
	The fuse is burned out	Call service center to replace the fuse
	Remote control batteries are dead	Replace batteries
	The Unit's 3-minute protection has been activated	Wait three minutes after restarting the unit
	Timer Function is activated	Turn off Timer Function
The unit starts and stops frequently	There's too much or too little refrigerant in the system	Call a service center to check for leaks and recharge the system with refrigerant.
	Incompressible gas or moisture has entered the system.	Call a service center to evacuate and recharge the system with refrigerant
	The compressor is broken	Call a service center to replace the compressor
	The voltage is too high or too low	Install a manostat to regulate the voltage
Poor heating performance	The outdoor temperature is extremely low	Use auxiliary heating device
	Cold air is entering through doors and windows	Ensure all doors and windows are closed during use
	Low refrigerant due to leak or long-term use	Call service center to check for leaks, re-seal if necessary and top off refrigerant
Indicator lamps continue flashing	The unit may stop operation or continue to run safely. If the indicator lamps continue to flash or error codes appear, wait for about 10 minutes. The problem may resolve itself. If not, disconnect the power, then connect it again. Turn the unit on. If the problem persists, disconnect the power and contact your nearest customer service center.	
Error code appears and begins with the letters as the following in the window display of the indoor unit: E(x), P(x), F(x) EH(xx), EL(xx), EC(xx) PH(xx), PL(xx), PC(xx)		

NOTE: If your problem persists after performing the checks and diagnostics above, turn off your unit immediately and contact an authorized service center.

START-UP CHECKLIST - Single Zone

Installation Data

Site Address:_____

City:_____ **State:**_____ **Zip Code:**_____

Installing Contractor:_____ **Contractor Contact #:** ( ) _____-_____

Job Name:_____ **Start-up Date:**_____

Distributor:_____

System Details

UNITS	MODEL NO.	SERIAL NO.	CONTROLLER
OUTDOOR UNIT			
INDOOR UNIT A			

Are the outdoor unit and indoor unit compatible? YES:_____ NO:_____

Wiring Electrical

Wire Size and Type Used? AWG:_____ TYPE:_____

Are there any breaks, splices, wire nuts or butt connectors between the outdoor unit and the indoor unit? YES:_____ NO:_____

Was the wiring from the outdoor unit port to the correct indoor unit verified? YES:_____ NO:_____

REMARKS:_____

_____

Voltage Check

Wiring: Single Zone

Outdoor Unit Disconnect	1(L1):GND		Outdoor Unit Terminal Block	1(L1):GND		**NOTES:**_____
	2(L2):GND			2(L2):GND		
	1(L1):L2(2)			1(L1):2(L2)		
Indoor Unit Voltage Check @ Outdoor Unit	1(L1):GND		Indoor Unit Voltage Check @ Indoor Unit	1(L1):GND		**NOTES:**_____
	2(L2):GND			2(L2):GND		
	1(L1):2(L2)			1(L1):2(L2)		
	2(L2):3(S)			2(L2):3(S)		

Outdoor Unit Disconnect	1(L1):GND		Outdoor Unit Terminal Block	1(L1):GND		**NOTES:**_____
	2(L2):GND			2(L2):GND		
	1(L1):L2(2)			1(L1):2(L2)		
Indoor Unit Voltage Check @ Outdoor Unit	1(L1):GND		Indoor Unit Voltage Check @ Indoor Unit	1(L1):GND		**NOTES:**_____
	2(L2):GND			2(L2):GND		
	1(L1):2(L2)			1(L1):2(L2)		
	2(L2):3(S)			2(L2):3(S)		

Manufacturer reserves the right to change, at any time, specifications and designs without notice and without obligations.

Start-Up Checklist (CONT)

Piping

Leak Check:
System held 500 psig (max. 550psi) for a minimum of 30 minutes using dry nitrogen. YES:_____ NO:_____

Evacuation Method:

- Was the Triple Evacuation Method used as outlined in the installation manual? YES:_____ NO:_____
- Was the Deep Vacuum Method used as outlined in the installation manual? YES:_____ NO:_____
- Did the System Hold 500 microns for 1 hour? YES:_____ NO:_____
- Does the line set match the diameter of the evaporator connections? YES:_____ NO:_____
- For Conventional Fan Coils, does the line set match the outdoor unit size? YES:_____ NO:_____

Single Zone Piping:
Has the liquid pipe length been measured and the additional charge calculated? Size:_____ Length:_____ Charge:_____

NOTES:

NOTE: Final Charge Amount must be recorded!

PORT	LIQUID SIZE		SUCTION SIZE		LENGTH	CHARGE	NOTES:_____
A							

Performance Check

For 1:1 Single Zone Systems: Adjust the set-point to create an operational call for the desired testing operation. Allow the system to run for a minimum of 10 min. and record the following details:

(Operational data recorded on applicable heads with the wireless remote controller's Point Check function)

UNIT	SET-POINT	MODE	T1	T2	T3	T4	Tb	Tp	Th	LA/Lr
A										

NOTE:

- T1 - Ambient Space Temperature Sensor
- T2 - IDU Coil Temperature Sensor
- T3 - Outdoor Coil Temperature Sensor
- T4 - Outdoor Ambient Temperature
- Tb - Suction Line Temperature @PMV
- Tp - Discharge Temperature Sensor
- Th - IPM Board Temperature
- LA/Lr - PMV Temperature

Error Codes

Were there any error codes present at start-up?
YES:_____ NO:_____

		Notes:
Indoor Unit Error Code:		
Outdoor Unit Error Code:		
Wall Controller:		
24V Interface:		

Comments:

_____

_____

© 2025 Carrier. All rights reserved.
Edition Date: 08/25
Catalog No: 45MUAA-02SI
Replaces: 45MUAA-01SI

Manufacturer reserves the right to change, at any time, specifications and designs without notice and without obligations.