# 59MN7A
# Infinity® Modulating 4–Way Multipoise Condensing Gas Furnace Series 2

Carrier
turn to the experts

# Product Data

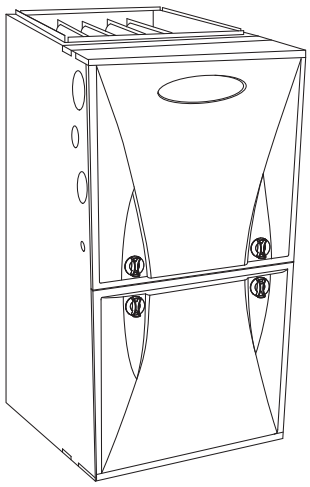

A11263

The 59MN7A Multipoise Variable-Capacity Condensing Gas Furnace features the modulating Infinity® System. The innovative modulating gas valve is at the heart of this furnace's quiet operation, along with the variable-speed Infinity ECM blower motor and variable-speed inducer motor. This furnace also provides 3.5 times tighter temperature control than single stage furnaces. With an Annual Fuel Utilization Efficiency (AFUE) up to 98.5%, this Infinity gas furnace provides exceptional savings over standard furnaces as well. This Infinity Gas Furnace also features 4-way multipoise installation flexibility. The 59MN7A can be vented as a direct vent/two-pipe furnace or as an optional ventilated combustion air application. A Carrier Infinity® Control and an Infinity Air Conditioner or Heat Pump can be used to form a complete Infinity System. All units meet California Air Quality Management District emission requirements. All sizes are design certified in Canada.

## STANDARD FEATURES

- Our quietest furnace. Compare for yourself at HVACpartners.com.
- All sizes meet ENERGY STAR Version 4.0 criteria for gas furnaces: 95+AFUE; AMACF electrical rating; 2% or less cabinet airflow leakage.
- Supports single- and multiple-zone Infinity systems.
- Ideal height 35" (889 mm) cabinet: short enough for taller coils, but still allows enough room for service.
- Infinity Features—match with the Infinity Control for Infinity System benefits
- Integral part of the Ideal Humidity System® Technology.
- Silicon Nitride Power Heat™ Hot Surface Igniter.
- SmartEvap™ technology helps control humidity levels in the home when used with a compatible humidity control system.
- ComfortFan™ technology allows control of continuous fan speed from a compatible thermostat.
- External Media Filter Cabinet included.
- 4-way multipoise design for upflow, downflow or horizontal installations, with unique vent elbow and optional through-the-cabinet downflow venting capability.
- Variable-Speed blower and inducer motors, modulating gas valve.
- Self-diagnostics and extended diagnostic data through the Advanced Product Monitor (APM) accessory or Infinity User Interface.
- Adjustable blower speed for cooling, continuous fan, and dehumidification.
- Aluminized-steel primary heat exchanger.
- Stainless-steel condensing secondary heat exchanger.
- Propane convertible (See Accessory list).
- Factory-configured ready for upflow applications.
- Fully-insulated casing including blower section.
- Convenient Air Purifier and Humidifier connections.
- Direct-vent/sealed combustion or ventilated combustion air venting.
- Installation flexibility: sidewall or vertical vent.
- Residential installations may be eligible for consumer financing through the Retail Credit Program.
- Certified to leak 2% or less of nominal air conditioning CFM delivered when pressurized to 1-in. water column with all present air inlets, air outlets, and condensate drain port(s) sealed.

Use of the AHRI Certified TM Mark indicates a manufacturer's participation in the program. For verification of certification for individual products, go to www.ahridirectory.org.

Always Ask For FACTORY AUTHORIZED PARTS

| SAP ORDERING NO. | CASING DIMENSIONS (IN.) | | | RATED HEATING OUTPUT† (BTUH) | | AFUE | | ENERGY STAR® | HEATING AIRFLOW | | | COOLING CFM @ 0.5 ESP | MOTOR HP (VARIABLE SPEED) | MEDIA CABINET SUPPLIED (IN.) |
|---|---|---|---|---|---|---|---|---|---|---|---|---|---|---|
| | H | D | W | Maximum | Minimum | Upflow/ Horizontal | Downflow | | CFM‡ (Minimum Heating) | CFM (Maximum Heating) | Rated Heating ESP @ Maximum | | | |
| 59MN7A060V17--14 | 35 | 29.5 | 17.5 | 59,000 | 24,000 | 97.4% | 95.0% | YES | 415 | 1075 | 0.12 | 510 - 1335 | 1/2 | 16 |
| 59MN7A060V21--20 | 35 | 29.5 | 21.0 | 60,000 | 24,000 | 98.5% | 96.7% | YES | 555 | 1085 | 0.12 | 510 - 1905 | 1 | 20 |
| 59MN7A080V17--14 | 35 | 29.5 | 17.5 | 78,000 | 31,000 | 97.4% | 95.0% | YES | 620 | 1500 | 0.15 | 490 - 1375 | 1/2 | 16 |
| 59MN7A080V21--20 | 35 | 29.5 | 21.0 | 78,000 | 31,000 | 97.2% | 95.0% | YES | 620 | 1345 | 0.15 | 750 - 1945 | 1 | 20 |
| 59MN7A100V21--22 | 35 | 29.5 | 21.0 | 98,000 | 39,000 | 97.3% | 95.0% | YES | 725 | 1575 | 0.20 | 715 - 2160 | 1 | 20 |
| 59MN7A120V24--22 | 35 | 29.5 | 24.5 | 117,000 | 47,000 | 97.2% | 95.5% | YES | 900 | 1820 | 0.20 | 885 - 2185 | 1 | 24 |

†Capacity in accordance with DOE test procedures. Ratings are position dependent. See rating plate.
‡Minimum heat CFM when low–heat rise adjustment switch (SW 1–3) and comfort/efficiency adjustment switch (SW1–4) on control center are OFF.
ESP – External Static Pressure



# FEATURES AND BENEFITS

**Greenspeed™ Intelligence** — Adaptable-speed technology paired with Infinity®intelligence, our new technology takes into account a home owner's complete comfort. It provides precise comfort by adjusting the heating demands of the home. This translates into reduced energy use and reduced temperature swings. Integrating luxury-level comfort control into a home so smoothly and quietly, you'll forget it's there.

**Fully Modulating Gas Valve** — When paired with the Infinity® control, this furnace improves comfort by adjusting heating output in 1% increments from 40% to 100% capacity to meet the heating needs of the home. Precision begins with a stepper motor to adjust manifold pressures. Stepper motors are used in electronic devices, such as computer disc drives, which require precise mechanical positioning. The precision of the stepper motor, combined with our unique two-point calibration, allows the modulating furnace to accurately control and directly deliver the right amount of gas to the burners every time.

**Ideal Humidity System® Technology** — The Ideal Humidity system actively controls both temperature and humidity in the home to provide the best comfort all year long. Other systems depend on heating or cooling demand to manage the moisture in the air. But, Ideal Humidity gives the homeowner the right amount of humidity day and night, even in mild weather. No other manufacturer can do this! Ideal Humidity saves energy, too. By keeping humidity under control, the homeowner can set their thermostat lower to stay comfortable and save energy.

**SmartEvap™ Technology** — When paired with a compatible thermostat, this dehumidification feature overrides the cooling blower off-delay when there is a call for dehumidification. By deactivating the blower off-delay, SmartEvap technology prevents condensate that remains on the coil after a dehumidification cycle from re-humidifying throughout the home. This results in reduced humidity and a more comfortable indoor environment for the homeowner.

Unlike competitive systems, SmartEvap technology only overrides the cooling when humidity control is needed. Once humidity is back in control, SmartEvap re-enables the energy-saving cooling blower off-delay.

**ComfortFan™ Technology** — Sometimes the constant fan setting on a standard furnace system can actually reduce homeowner comfort by providing too much or too little air! Comfort Fan technology improves comfort all year long by allowing the homeowner to select the continuous fan speed of their choice using a compatible thermostat.

**Power Heat™ Igniter** — Carrier's unique SiN igniter is not only physically robust but it is also electrically robust. It is capable of running at line voltage and does not require complex voltage regulators as do other brands. This unique feature further enhances the gas furnace reliability and continues Carrier's tradition of technology leadership and innovation in providing a reliable and durable product.

**Full-Featured, Communicating, Variable Speed Motors** — Our ECMs (Electronically Commutated Motors) provide variable-speed operation to optimize comfort levels in the home year round; features such as passive/active dehumidification, ramping profiles, constant air flow and quiet operation. They can provide cooling match enhancements to increase the effective SEER of select Carrier air conditioner or heat pump system, and feature the highest efficiency of all indoor fan motors.

**Reliable Heat Exchanger Design** — The aluminized steel, clam shell primary heat exchanger was re-engineered to achieve greater efficiency out of a smaller size. The first two passes of the heat exchanger are based on the current 80% product, a design with more than ten years of field-proven performance and success. These innovations, paired with the continuation of a crimped, no-weld seam create an efficient, robust design for this essential component.

The condensing heat exchanger, a stainless steel fin and tube design, is positioned in the furnace to extract additional heat. Stainless steel coupling box componentry between heat exchangers has exceptional corrosion resistance in both natural gas and propane applications.

**Media Filter Cabinet** — Enhanced indoor air quality in the home is made easier with our media filter cabinet—a standard accessory on all deluxe furnaces. When installed as a part of the system, this cabinet allows for easy and convenient addition of a Carrier high efficiency air filter.

**4-Way Multipoise Design** — One model for all applications – there is no need to stock special downflow or horizontal models when one unit will do it all. The new heat exchanger design allows these units to achieve the certified AFUE in all positions.

**Direct Venting or Optional Ventilated Combustion Air** — This furnace can be installed as a 2-pipe (Direct Vent) furnace or as an optional ventilated combustion air application. This provides added flexibility to meet diverse installation needs.

**Sealed Combustion System** — This furnace brings in combustion air from outside the furnace, which results in especially quiet operation. By sealing the entire combustion vestibule, the entire furnace can be made quieter, not just the burners.

**Insulated Casing** — Foil-faced insulation in the heat exchanger section of the casing minimizes heat loss. The acoustical insulation in the blower compartment reduces air and motor noise for quiet operation.

**Monoport Burners** — The burners are specially designed and finely tuned for smooth, quiet combustion and economical operation.

**Bottom Closure** — Factory-installed for side return; easily removable for bottom return. The multi-use bottom closure can also serve for roll-out protection in horizontal applications, and act as the bottom closure for the optional return air base accessory.

**Blower Access Panel Switch** — Automatically shuts off 115-v power to furnace whenever blower access panel is opened.

**Quality Registration** — Our furnaces are engineered and manufactured under an ISO 9001 registered quality system.

**Certifications** — This furnace is CSA (AGA and CGA) design certified for use with natural and propane gases. The furnace is factory-shipped for use with natural gas. A CSA listed gas conversion kit is required to convert furnace for use with propane gas. The efficiency is AHRI efficiency rating certified. This furnace meets California Air Quality Management District emission requirements.

# SPECIFICATIONS

The furnace should be sized to provide 100 percent of the design heating load requirement plus any margin that occurs because of furnace model size capacity increments. None of the furnace model sizes can be used if the heating load is 20,000 BTU or lower. Use Air Conditioning Contractors of America (Manual J and S); American Society of Heating, Refrigerating, and Air-Conditioning Engineers; or other approved engineering method to calculate heating load estimates and select the furnace. Excessive oversizing of the furnace may cause the furnace and/or vent to fail prematurely, customer discomfort and/or vent freezing.

Failure to follow these guidelines is considered faulty installation and/or misapplication of the furnace; and resulting failure, damage, or repairs may impact warranty coverage.

| **Heating Capacity and Efficiency** | | | **060-14** | **060-20** | **080-14** | **080-20** | **100-22** | **120-22** |
|---|---|---|---|---|---|---|---|---|
| Input | Maximum Heat | (BTUH) | 60,000 | 60,600 | 80,000 | 80,000 | 100,000 | 120,000 |
| | Intermediate Heat | (BTUH) | 39,000 | 39,000 | 52,000 | 52,000 | 65,000 | 78,000 |
| | Minimum Heat | (BTUH) | 24,000 | 24,000 | 32,000 | 32,000 | 40,000 | 48,000 |
| Output | Maximum Heat | (BTUH) | 59,000 | 60,000 | 78,000 | 78,000 | 98,000 | 117,000 |
| | Intermediate Heat | (BTUH) | 38,000 | 39,000 | 51,000 | 51,000 | 64,000 | 76,000 |
| | Minimum Heat | (BTUH) | 24,000 | 24,000 | 31,000 | 31,000 | 39,000 | 47,000 |
| Certified Temperature Rise Range ºF (ºC) | | Maximum Heat | 35 - 65 (19 - 36) | 35 - 65 (19 - 36) | 40 - 70 (22 - 39) | 40 - 70 (22 - 39) | 45 - 75 (25 - 42) | 45 - 75 (25 - 42) |
| | | Intermediate Heat | 50 - 80 (28 - 44) | 40 - 70 (22 - 39) | 50 - 80 (28 - 44) | 50 - 80 (28 - 44) | 50 - 80 (28 - 44) | 50 - 80 (28 - 44) |
| | | Minimum Heat | 35 - 65 (19 - 36) | 25 - 55 (14-31) | 35 - 65 (19 - 36) | 35 - 65 (19 - 36) | 35 - 65 (19 - 36) | 35 - 65 (19 - 36) |
| | | | | | | | | |
| **Airflow Capacity and Blower Data** | | | **060-14** | **060-20** | **080-14** | **080-20** | **100-22** | **120-22** |
| Rated External Static Pressure (in. w.c.) | | Heating | 0.12 | 0.12 | 0.15 | 0.15 | 0.20 | 0.20 |
| | | Cooling | 0.5 | 0.5 | 0.5 | 0.5 | 0.5 | 0.5 |
| Airflow Delivery @ Rated ESP (CFM) | | Maximum Heat | 1075 | 1080 | 1500 | 1345 | 1575 | 1820 |
| | | Intermediate Heat | 530 | 690 | 750 | 795 | 955 | 1100 |
| | | Minimum Heat | 415 | 555 | 620 | 595 | 745 | 900 |
| | | Cooling | 1335 | 1905 | 1375 | 1945 | 2160 | 2185 |
| Cooling Capacity (tons) | | 400 CFM/ton | 3 | 4.5 | 3.5 | 4.5 | 5.5 | 5.5 |
| | | 350 CFM/ton | 3.5 | 5.5 | 4 | 5.5 | 6 | 6 |
| Direct-Drive Motor Type | | | Electronically Commutated Motor (ECM) | | | | | |
| Direct-Drive Motor HP | | | 1/2 | 1 | 1/2 | 1 | 1 | 1 |
| Motor Full Load Amps | | | 7.7 | 12.8 | 7.7 | 12.8 | 12.8 | 12.8 |
| RPM Range | | | 300 - 1300 | | | | | |
| Speed Selections | | | Variable (Communicating) | | | | | |
| Blower Wheel Dia x Width | | in. | 11 x 8 | 11 x 10 | 11 x 8 | 11 x 10 | 11 x 10 | 11 x 11 |
| Air Filtration System | | | Factory Supplied Media Cabinet<br>Field Supplied Filter | | | | | |
| Filter Used for Certified Watt Data* | | | KGAWF**06UFR | | | | | |
| | | | | | | | | |
| **Electrical Data** | | | **060-14** | **060-20** | **080-14** | **080-20** | **100-22** | **120-22** |
| Input Voltage | | Volts-Hertz-Phase | 115-60-1 | | | | | |
| Operating Voltage Range | | Min-Max | 104 -127 | | | | | |
| Maximum Input Amps | | Amps | 9.7 | 14.8 | 9.7 | 14.8 | 14.8 | 14.8 |
| Unit Ampacity | | Amps | 12.7 | 19.1 | 12.7 | 19.1 | 19.1 | 19.1 |
| Minimum Wire Size | | AWG | 14 | 12 | 14 | 12 | 12 | 12 |
| Maximum Wire Length @ Minimum Wire Size | | Feet | 29 | 30 | 29 | 30 | 30 | 30 |
| | | (M) | (8.8) | (9.1) | (8.8) | (9.1) | (9.1) | (9.1) |
| Maximum Fuse/Ckt Bkr (Time-Delay Type Recommended) | | Amps | 15 | 20 | 15 | 20 | 20 | 20 |
| Transformer Capacity (24vac output) | | | 40 VA | | | | | |
| External Control Power Available | | Heating | 27.9 VA | | | | | |
| | | Cooling | 34.6 VA | | | | | |
| | | | | | | | | |
| **Controls** | | | **060-14** | **060-20** | **080-14** | **080-20** | **100-22** | **120-22** |
| Gas Connection Size | | | 1/2" - NPT | | | | | |
| Burners (Monoport) | | | 3 | 3 | 4 | 4 | 5 | 6 |
| Gas Valve (Redundant) | | Manufacturer | White Rogers | | | | | |
| Minimum Inlet Gas pressure (in. wc) | | | 4.5 | | | | | |
| Maximum Inlet Gas pressure (in. wc) | | | 13.6 | | | | | |
| Manufactured (Mobile) Home Kit | | | *not approved for MH use* | | | | | |
| Twinning Kit | | | *not approved for twinning* | | | | | |
| Ignition Device | | | Silicon Nitride | | | | | |

* See Accessory List for part numbers available.

# SPECIFICATIONS (CONTINUED)

| Controls | 060-14 | 060-20 | 080-14 | 080-20 | 100-22 | 120-22 |
|---|---|---|---|---|---|---|
| Limit Control | 180 | 160 | 170 | 200 | 180 | 160 |
| Heating Blower Control (Heating Off-Delay) | Adjustable: 90, 120, 150, 180 seconds | | | | | |
| Cooling Blower Control (Time Delay Relay) | 90 seconds | | | | | |
| Communication System | Infinity; Infinity Zoning | | | | | |
| Thermostat Connections | R, W/W1, W2 Y/Y2, Y1, G, Com 24V, DHUM | | | | | |
| Accessory Connections | EAC (115vac); HUM (24vac); 1-stg AC (via Y/Y2) | | | | | |

# MODEL NUMBER NOMENCLATURE

Example of Model Number

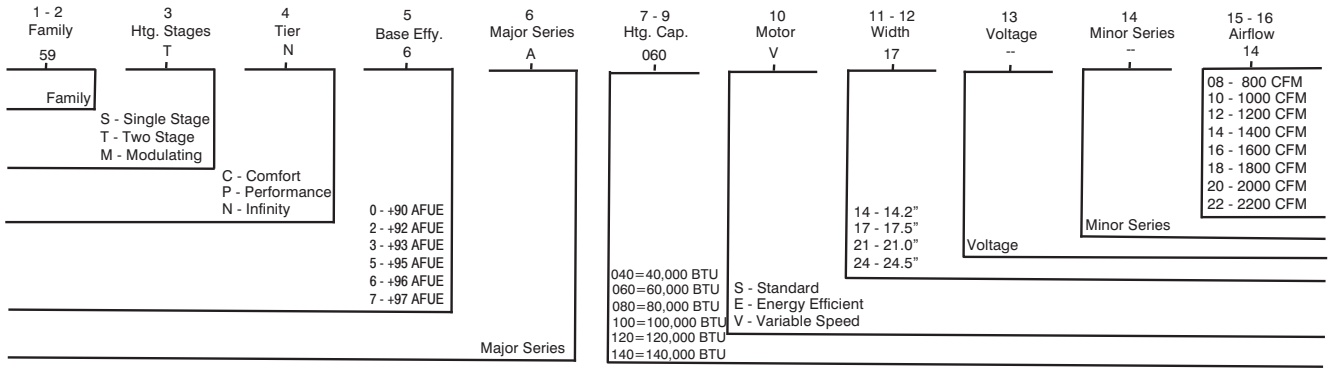


Not all familes have these models.

A12373

# FURNACE COMPONENTS

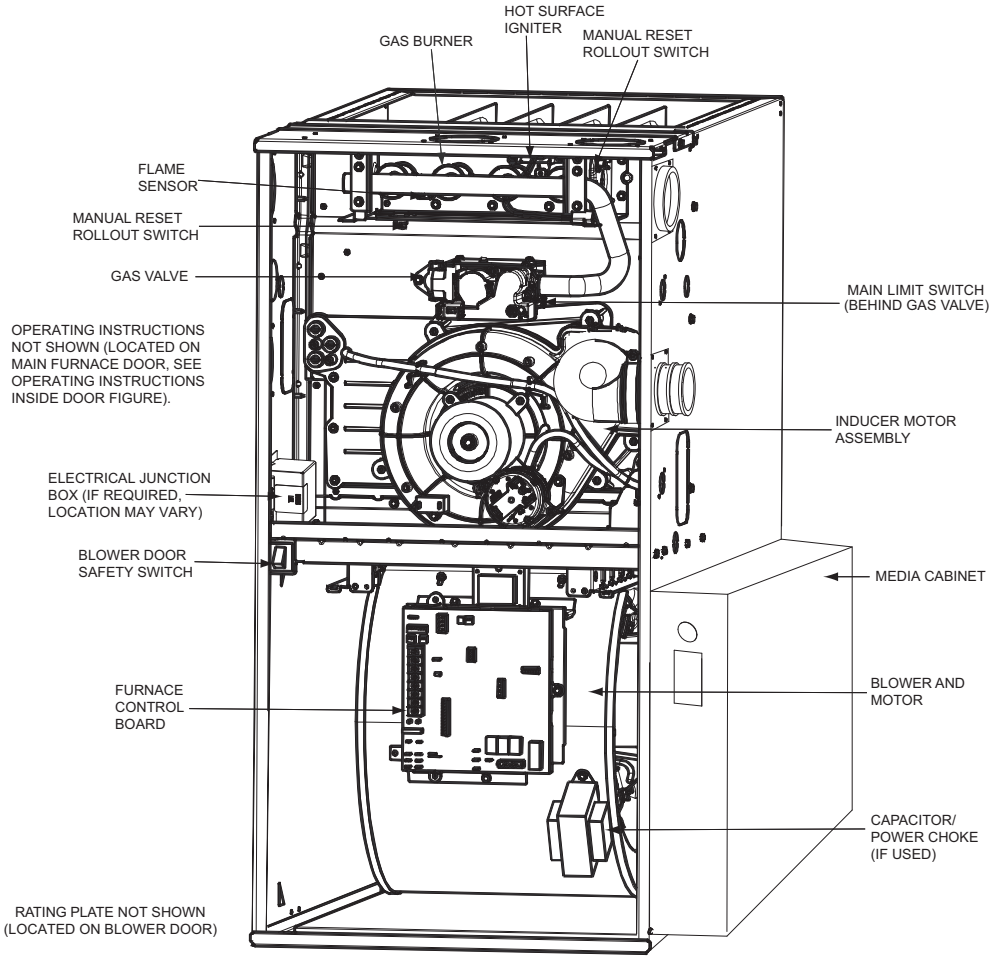


REPRESENTATIVE DRAWING ONLY, SOME MODELS MAY VARY IN APPEARANCE.

A11408

# ACCESSORIES

| DESCRIPTION | PART NUMBER | 060-14 | 060-20 | 080-14 | 080-20 | 100-22 | 120-22 |
|---|---|---|---|---|---|---|---|
| **Venting Accessories** | | | | | | | |
| Vent Kit - Through the Cabinet | KGADC0101BVC | ● | ● | ● | ● | ● | ● |
| Vent Terminal - Concentric - 2” (51 mm) | KGAVT0701CVT | See Venting Tables | | | | | |
| Vent Terminal - Concentric - 3” (76 mm) | KGAVT0801CVT | | | | | | |
| Vent Terminal Bracket - 2” (51 mm) | KGAVT0101BRA | | | | | | |
| Vent Terminal Bracket - 3” (76 mm) | KGAVT0201BRA | | | | | | |
| Vent Kit – Rubber Coupling | KGAAC0101RVC | See Venting Tables | | | | | |
| **Condensate Drainage Accessories** | | | | | | | |
| Freeze Protect Kit - Heat Tape | KGAHT0101CFP | ● | ● | ● | ● | ● | ● |
| CPVC to PVC Drain Adapters - 1/2” CPVC to 3/4” PVC | KGAAD0110PVC | ● | ● | ● | ● | ● | ● |
| Horizontal Trap Grommet - Direct Vent | KGACK0101HCK | All DV Horizontal | | | | | |
| Condensate Neutralizer Kit | P908–0001 | ● | ● | ● | ● | ● | ● |
| External Trap Kit | KGAET0201ETK | ● | ● | ● | ● | ● | ● |
| **Ductwork Adapter Accessories** | | | | | | | |
| Furnace Base Kit for Combustible Floors | KGASB0201ALL | ● | ● | ● | ● | ● | ● |
| Coil Adapter Kits – No Offset | KGADA0101ALL | ● | ● | ● | ● | ● | ● |
| Coil Adapter Kits – Single Offset | KGADA0201ALL | ● | ● | ● | ● | ● | ● |
| Coil Adapter Kits – Double Offset | KGADA0301ALL | ● | ● | ● | ● | ● | ● |
| Return Air Base (Upflow Applications) 17.5–in. wide | KGARP0301B17 | ● | | ● | | | |
| Return Air Base (Upflow Applications) 21.0–in. wide | KGARP0301B21 | | ● | | ● | ● | |
| Return Air Base (Upflow Applications) 24.5–in. wide | KGARP0301B24 | | | | | | ● |
| IAQ Device Duct Adapters 20.0–in. IAQ to 16 in. Side Return | KGAAD0101MEC | 20”x25” IAQ Devices | | | | | |
| IAQ Device Duct Adapters 24.0–in. IAQ to 16 in. Side Return | KGAAD0201MEC | 24”x25” IAQ Devices | | | | | |
| **Gas Conversion Accessories** | | | | | | | |
| Gas Conversion Kit - Nat to LP; Var-speed Products | KGCNP5201VSP | ● | ● | ● | ● | ● | ● |
| Gas Conversion Kit - LP to Nat; Var-speed Products | KGCPN4401VSP | ● | ● | ● | ● | ● | ● |
| Gas Orifice Kit - #42 (Nat Gas) | LH32DB207 | ● | ● | ● | ● | ● | ● |
| Gas Orifice Kit - #43 (Nat Gas) | LH32DB202 | ● | ● | ● | ● | ● | ● |
| Gas Orifice Kit - #44 (Nat Gas) | LH32DB200 | ● | ● | ● | ● | ● | ● |
| Gas Orifice Kit - #45 (Nat Gas) | LH32DB205 | ● | ● | ● | ● | ● | ● |
| Gas Orifice Kit - #46 (Nat Gas) | LH32DB208 | ● | ● | ● | ● | ● | ● |
| Gas Orifice Kit - #47 (Nat Gas) | LH32DB078 | ● | ● | ● | ● | ● | ● |
| Gas Orifice Kit - #48 (Nat Gas) | LH32DB076 | ● | ● | ● | ● | ● | ● |
| Gas Orifice Kit - #54 (LP) | LH32DB203 | ● | ● | ● | ● | ● | ● |
| Gas Orifice Kit - #55 (LP) | LH32DB201 | ● | ● | ● | ● | ● | ● |
| Gas Orifice Kit - #56 (LP) | LH32DB206 | ● | ● | ● | ● | ● | ● |
| Gas Orifice Kit - 1.25mm (LP) | LH32DB209 | ● | ● | ● | ● | ● | ● |
| Gas Orifice Kit - 1.30mm (LP) | LH32DB210 | ● | ● | ● | ● | ● | ● |
| **Control Accessories** | | | | | | | |
| ECM Motor Simulator Kit | KGBSD0301FMS | ● | ● | ● | ● | ● | ● |
| Advanced Product Monitor – APM | KGASD0301APM | ● | ● | ● | ● | ● | ● |
| Infinity® Touch Control – Wi–Fi | SYSTXCCITW01 | ● | ● | ● | ● | ● | ● |
| Infinity® Touch Control – Non–Wi–Fi | SYSTXCCITN01 | ● | ● | ● | ● | ● | ● |
| **IAQ Accessories** | | | | | | | |
| Filter Pack (6 pack) – Washable - 16x25x1 (406x635x25 mm) | KGAWF1306UFR | ● | ● | ● | ● | ● | ● |
| Filter Pack (6 pack) – Washable - 24x25x1 (610x635x25 mm) | KGAWF1506UFR | ● | ● | ● | ● | ● | ● |
| EZ-Flex Filter - 16” (406 mm) | EXPXXFIL0016 | Use with EZXCAB–1016 | | | | | |
| EZ-Flex Filter - 20” (508 mm) | EXPXXFIL0020 | Use with EZXCAB–1020 | | | | | |
| EZ-Flex Filter - 24” (610 mm) | EXPXXFIL0024 | Use with EZXCAB–1024 | | | | | |
| EZ-Flex Filter with End Caps - 16” (406 mm) | EXPXXUNV0016 | Use with EZXCAB–1016 | | | | | |
| EZ-Flex Filter with End Caps - 20” (508 mm) | EXPXXUNV0020 | Use with EZXCAB–1020 | | | | | |
| EZ-Flex Filter with End Caps - 24” (610 mm) | EXPXXUNV0024 | Use with EZXCAB–1024 | | | | | |
| Cartridge Media Filter - 16” (406 mm) | FILXXCAR0016 | Use with FILCABXL–1016 | | | | | |
| Cartridge Media Filter - 20” (508 mm) | FILXXCAR0020 | Use with FILCABXL–1020 | | | | | |
| Cartridge Media Filter - 24” (610 mm) | FILXXCAR0024 | Use with FILCABXL–1024 | | | | | |
| Carrier Infinity Air Purifier - 16x25 (406x635 mm) | GAPAAXCC1625-A08 | Up to 1600 CFM | | | | | |
| Carrier Infinity Air Purifier - 20x25 (508x635 mm) | GAPAAXCC2025-A08 | Up to 2000 CFM | | | | | |
| Carrier Infinity Air Purifier Repl. Filter- 16x25 (406x635 mm) | GAPACCCAR1625-A05 | GAPAAXCC1625–A08 | | | | | |
| Carrier Infinity Air Purifier Repl. Filter- 20x25 (508x635 mm) | GAPACCCAR2025-A05 | GAPAAXCC2025–A08 | | | | | |
| Carrier Performance Air Purifier - 16x25 (508x635 mm) | PGAPXX1625 | Up to 1600 CFM | | | | | |
| Carrier Performance Air Purifier - 20x25 (508x635 mm) | PGAPXX2025 | Up to 2000 CFM | | | | | |
| Carrier Performance Air Purifier Repl Filter - 16x25 (406x635 mm) | PGAPAXXCAR1625 | GAPAAXCC1625 | | | | | |
| Carrier Performance Air Purifier Repl. Filter - 20x25 (508x635 mm) | PGAPAXXCAR2025 | GAPAAXCC2025 | | | | | |

● = Used with the model furnace

59MN7A

# AIR DELIVERY - CFM

## Cooling[4] and Heating Air Delivery - CFM (Bottom Return[5] With Filter)

**(SW1-5 and SW4-3 set to OFF, except as indicated. See notes 1 and 2)**

| Unit Size | Clg/CF Switch Settings | | | External Static Pressure (ESP) | | | | | | | | | |
|---|---|---|---|---|---|---|---|---|---|---|---|---|---|
| | SWx-3 | SWx-2 | SWx-1 | 0.1 | 0.2 | 0.3 | 0.4 | 0.5 | 0.6 | 0.7 | 0.8 | 0.9 | 1.0 |
| **060-14** | | | | | | | | | | | | | |
| *Clg Default:* | OFF | OFF | OFF | 1060 | 1070 | 1080 | 1080 | 1075 | 1065 | 1050 | 1035 | 1025 | 1010 |
| *CF Default:* | OFF | OFF | OFF | 545 | 530 | 520 | 525 | 510 | See note 4 | | | | |
| *Cooling (SW2) Cont Fan (SW3)* | OFF | OFF | ON | 545 | 530 | 520 | 525 | 510 | See note 4 | | | | |
| | OFF | ON | OFF | 710 | 710 | 710 | 695 | 690 | See note 4 | | | | |
| | OFF | ON | ON | 875 | 880 | 890 | 895 | 895 | 890 | 885 | 880 | 870 | 855 |
| | ON | OFF | OFF | 1060 | 1070 | 1080 | 1080 | 1075 | 1065 | 1050 | 1035 | 1025 | 1010 |
| | ON | OFF | ON | 1235 | 1240 | 1250 | 1255 | 1255 | 1250 | 1230 | 1190 | 1155 | 1115 |
| | ON | ON | OFF | 1235 | 1240 | 1250 | 1255 | 1255 | 1250 | 1230 | 1190 | 1155 | 1115 |
| | ON | ON | ON | 1235 | 1240 | 1250 | 1255 | 1255 | 1250 | 1230 | 1190 | 1155 | 1115 |
| *Clg SW2:* | Maximum Clg Airflow [2] | | | 1425 | 1425 | 1405 | 1370 | 1335 | 1300 | 1260 | 1225 | 1190 | 1155 |
| *Heating (SW1)* | Maximum Heat Airflow [3] | | | 1075 | 1085 | 1095 | 1095 | 1090 | 1080 | 1065 | 1050 | 1035 | 1020 |
| | Intermediate Heat Airflow [3] | | | 535 | 515 | 505 | 515 | 495 | See note 4 | | | | |
| | Minimum Heat Airflow [3] | | | 420 | 410 | 415 | 400 | 380 | See note 4 | | | | |

| Unit Size | Clg/CF Switch Settings | | | External Static Pressure (ESP) | | | | | | | | | |
|---|---|---|---|---|---|---|---|---|---|---|---|---|---|
| | SWx-3 | SWx-2 | SWx-1 | 0.1 | 0.2 | 0.3 | 0.4 | 0.5 | 0.6 | 0.7 | 0.8 | 0.9 | 1.0 |
| **060-20** | | | | | | | | | | | | | |
| *Clg Default:* | OFF | OFF | OFF | 1735 | 1735 | 1725 | 1715 | 1700 | 1685 | 1665 | 1650 | 1625 | 1605 |
| *CF Default:* | OFF | OFF | OFF | 545 | 530 | 520 | 525 | 510 | See note 4 | | | | |
| *Cooling (SW2) Cont Fan (SW3)* | OFF | OFF | ON | 540 | 525 | 525 | 520 | 540 | See note 4 | | | | |
| | OFF | ON | OFF | 680 | 725 | 725 | 720 | 720 | See note 4 | | | | |
| | OFF | ON | ON | 925 | 915 | 910 | 895 | 900 | 890 | 875 | 865 | 860 | 855 |
| | ON | OFF | OFF | 1070 | 1075 | 1080 | 1070 | 1080 | 1075 | 1055 | 1045 | 1030 | 1020 |
| | ON | OFF | ON | 1215 | 1245 | 1235 | 1220 | 1220 | 1210 | 1200 | 1195 | 1185 | 1175 |
| | ON | ON | OFF | 1380 | 1385 | 1395 | 1390 | 1395 | 1390 | 1380 | 1365 | 1355 | 1340 |
| | ON | ON | ON | 1735 | 1735 | 1725 | 1715 | 1700 | 1685 | 1665 | 1650 | 1625 | 1605 |
| *Clg SW2:* | Maximum Clg Airflow [2] | | | 1955 | 1950 | 1940 | 1925 | 1905 | 1885 | 1855 | 1815 | 1745 | 1685 |
| *Heating (SW1)* | Maximum Heat Airflow [3] | | | 1080 | 1085 | 1095 | 1090 | 1095 | 1085 | 1070 | 1055 | 1045 | 1030 |
| | Intermediate Heat Airflow [3] | | | 685 | 725 | 730 | 725 | 730 | See note 4 | | | | |
| | Minimum Heat Airflow [3] | | | 560 | 555 | 555 | 550 | 565 | See note 4 | | | | |

| Unit Size | Clg/CF Switch Settings | | | External Static Pressure (ESP) | | | | | | | | | |
|---|---|---|---|---|---|---|---|---|---|---|---|---|---|
| | SWx-3 | SWx-2 | SWx-1 | 0.1 | 0.2 | 0.3 | 0.4 | 0.5 | 0.6 | 0.7 | 0.8 | 0.9 | 1.0 |
| **080-14** | | | | | | | | | | | | | |
| *Clg Default:* | OFF | OFF | OFF | 1055 | 1065 | 1080 | 1075 | 1065 | 1050 | 1045 | 1035 | 1025 | 1005 |
| *CF Default:* | OFF | OFF | OFF | 520 | 505 | 505 | 495 | 490 | See note 4 | | | | |
| *Cooling (SW2) Cont Fan (SW3)* | OFF | OFF | ON | 520 | 505 | 505 | 495 | 490 | See note 4 | | | | |
| | OFF | ON | OFF | 665 | 685 | 680 | 660 | 665 | See note 4 | | | | |
| | OFF | ON | ON | 885 | 895 | 905 | 900 | 900 | 895 | 885 | 875 | 860 | 845 |
| | ON | OFF | OFF | 1055 | 1065 | 1080 | 1075 | 1065 | 1050 | 1045 | 1035 | 1025 | 1005 |
| | ON | OFF | ON | 1245 | 1245 | 1255 | 1255 | 1260 | 1255 | 1250 | 1235 | 1220 | 1185 |
| | ON | ON | OFF | 1245 | 1245 | 1255 | 1255 | 1260 | 1255 | 1250 | 1235 | 1220 | 1185 |
| | ON | ON | ON | 1245 | 1245 | 1255 | 1255 | 1260 | 1255 | 1250 | 1235 | 1220 | 1185 |
| *Clg SW2:* | Maximum Clg Airflow [2] | | | 1520 | 1485 | 1450 | 1415 | 1375 | 1335 | 1300 | 1265 | 1225 | 1190 |
| *Heating (SW1)* | Maximum Heat Airflow [3] | | | 1520 | 1485 | 1450 | 1415 | 1375 | 1335 | 1300 | 1265 | 1225 | 1190 |
| | Intermediate Heat Airflow [3] | | | 755 | 745 | 755 | 755 | 765 | See note 4 | | | | |
| | Minimum Heat Airflow [3] | | | 620 | 625 | 630 | 620 | 610 | See note 4 | | | | |

# AIR DELIVERY - CFM (CONTINUED)

## Cooling[4] and Heating Air Delivery - CFM (Bottom Return[5] With Filter)

**(SW1-5 and SW4-3 set to OFF, except as indicated. See notes 1 and 2)**

| Unit Size | Clg/CF Switch Settings | | | External Static Pressure (ESP) | | | | | | | | | |
|---|---|---|---|---|---|---|---|---|---|---|---|---|---|
| | SWx-3 | SWx-2 | SWx-1 | 0.1 | 0.2 | 0.3 | 0.4 | 0.5 | 0.6 | 0.7 | 0.8 | 0.9 | 1.0 |
| **080-20** | | | | | | | | | | | | | |
| *Clg Default:* | OFF | OFF | OFF | 1745 | 1755 | 1755 | 1760 | 1755 | 1750 | 1745 | 1725 | 1705 | 1685 |
| *CF Default:* | OFF | OFF | OFF | 700 | 710 | 750 | 725 | 750 | See note 4 | | | | |
| *Cooling (SW2) Cont Fan (SW3)* | OFF | OFF | ON | 700 | 710 | 750 | 725 | 750 | See note 4 | | | | |
| | OFF | ON | OFF | 830 | 860 | 870 | 890 | 960 | See note 4 | | | | |
| | OFF | ON | ON | 1045 | 1045 | 1060 | 1070 | 1070 | 1070 | 1095 | 1090 | 1080 | 1070 |
| | ON | OFF | OFF | 1215 | 1220 | 1245 | 1240 | 1235 | 1235 | 1225 | 1220 | 1235 | 1235 |
| | ON | OFF | ON | 1370 | 1370 | 1390 | 1390 | 1400 | 1395 | 1400 | 1390 | 1390 | 1385 |
| | ON | ON | OFF | 1745 | 1755 | 1755 | 1760 | 1755 | 1750 | 1745 | 1725 | 1705 | 1685 |
| | ON | ON | ON | 1745 | 1755 | 1755 | 1760 | 1755 | 1750 | 1745 | 1725 | 1705 | 1685 |
| *Clg SW2:* | Maximum Clg Airflow [2] | | | 1920 | 1920 | 1945 | 1945 | 1945 | 1960 | 1950 | 1940 | 1915 | 1900 |
| *Heating (SW1)* | Maximum Heat Airflow [3] | | | 1340 | 1355 | 1370 | 1385 | 1380 | 1385 | 1400 | 1400 | 1385 | 1380 |
| | Intermediate Heat Airflow [3] | | | 780 | 810 | 835 | 840 | 845 | See note 4 | | | | |
| | Minimum Heat Airflow [3] | | | 595 | 595 | 600 | 595 | 605 | See note 4 | | | | |
| **Unit Size** | **Clg/CF Switch Settings** | | | **External Static Pressure (ESP)** | | | | | | | | | |
| | SWx-3 | SWx-2 | SWx-1 | 0.1 | 0.2 | 0.3 | 0.4 | 0.5 | 0.6 | 0.7 | 0.8 | 0.9 | 1.0 |
| **100-22** | | | | | | | | | | | | | |
| *Clg Default:* | OFF | OFF | OFF | 1820 | 1825 | 1840 | 1845 | 1840 | 1835 | 1825 | 1805 | 1780 | 1770 |
| *CF Default:* | OFF | OFF | OFF | 750 | 740 | 745 | 730 | 715 | See note 4 | | | | |
| *Cooling (SW2) Cont Fan (SW3)* | OFF | OFF | ON | 750 | 740 | 745 | 730 | 715 | See note 4 | | | | |
| | OFF | ON | OFF | 900 | 900 | 915 | 910 | 905 | See note 4 | | | | |
| | OFF | ON | ON | 1070 | 1075 | 1095 | 1095 | 1090 | 1085 | 1095 | 1080 | 1065 | 1070 |
| | ON | OFF | OFF | 1280 | 1285 | 1305 | 1305 | 1310 | 1305 | 1295 | 1300 | 1290 | 1285 |
| | ON | OFF | ON | 1440 | 1445 | 1465 | 1465 | 1470 | 1485 | 1480 | 1485 | 1475 | 1460 |
| | ON | ON | OFF | 1820 | 1825 | 1840 | 1845 | 1840 | 1835 | 1825 | 1805 | 1780 | 1770 |
| | ON | ON | ON | 2135 | 2140 | 2140 | 2135 | 2140 | 2130 | 2115 | 2100 | 2070 | 2015 |
| *Clg SW2:* | Maximum Clg Airflow [2] | | | 2160 | 2165 | 2175 | 2170 | 2160 | 2150 | 2135 | 2120 | 2065 | 2020 |
| *Heating (SW1)* | Maximum Heat Airflow [3] | | | 1570 | 1575 | 1595 | 1595 | 1600 | 1605 | 1600 | 1600 | 1590 | 1575 |
| | Intermediate Heat Airflow [3] | | | 950 | 955 | 965 | 975 | 970 | See note 4 | | | | |
| | Minimum Heat Airflow [3] | | | 755 | 745 | 750 | 735 | 720 | See note 4 | | | | |
| **Unit Size** | **Clg/CF Switch Settings** | | | **External Static Pressure (ESP)** | | | | | | | | | |
| | SWx-3 | SWx-2 | SWx-1 | 0.1 | 0.2 | 0.3 | 0.4 | 0.5 | 0.6 | 0.7 | 0.8 | 0.9 | 1.0 |
| **120-22 [6]** | | | | | | | | | | | | | |
| *Clg Default:* | OFF | OFF | OFF | 1850 | 1855 | 1860 | 1855 | 1850 | 1830 | 1805 | 1775 | 1750 | 1730 |
| *CF Default:* | OFF | OFF | OFF | 930 | 925 | 915 | 900 | 885 | See note 4 | | | | |
| *Cooling (SW2) Cont Fan (SW3) '* | OFF | OFF | ON | 765 | 745 | 740 | 705 | 680 | See note 4 | | | | |
| | OFF | ON | OFF | 930 | 925 | 915 | 900 | 885 | See note 4 | | | | |
| | OFF | ON | ON | 1095 | 1100 | 1110 | 1105 | 1085 | See note 4 | | | | |
| | ON | OFF | OFF | 1265 | 1255 | 1265 | 1280 | 1275 | 1285 | 1270 | 1260 | 1250 | 1230 |
| | ON | OFF | ON | 1465 | 1455 | 1470 | 1465 | 1465 | 1470 | 1455 | 1450 | 1435 | 1415 |
| | ON | ON | OFF | 1850 | 1855 | 1860 | 1855 | 1850 | 1830 | 1805 | 1775 | 1750 | 1730 |
| | ON | ON | ON | 2200 | 2200 | 2200 | 2190 | 2185 | 2170 | 2145 | 2085 | 1990 | 1890 |
| *Clg SW2:* | Maximum Clg Airflow [2] | | | 2200 | 2200 | 2200 | 2190 | 2185 | 2170 | 2145 | 2085 | 1990 | 1890 |
| *Heating (SW1)* | Maximum Heat Airflow [3] | | | 1815 | 1820 | 1825 | 1820 | 1815 | 1795 | 1775 | 1745 | 1720 | 1700 |
| | Intermediate Heat Airflow [3] | | | 1095 | 1100 | 1110 | 1105 | 1085 | See note 4 | | | | |

1. Nominal 350 CFM/ton cooling airflow is delivered with SW1-5 and SW4-3 set to OFF.
   Set SW1-5 to ON for nominal 400 CFM/ton (+15% airflow).
   Set SW4-3 to ON for nominal 325 CFM/ton (-7% airflow).
   Set both SW1-5 and SW4-3 to ON for nominal 370 CFM/ton (+7% airflow).
   ***The above adjustments in airflow are subject to motor horsepower range/capacity.***
2. Maximum cooling airflow is achieved when switches SW2-1, SW2-2, SW2-3 and SW1-5 are set to ON, and SW4-3 is set to OFF.
3. All heating CFM's are when low/medium heat rise adjustment switch (SW1-3) and comfort/efficiency adjustment switch (SW1-4) are both set to OFF.
4. Ductwork must be sized for high-heating CFM within the operational range of ESP. Operation within the blank areas of the chart is not recommended because high-heat operation will be above 1.0 ESP.
5. All airflows on 21" casing size furnaces are 5% less on side return only installations.
6. Return air above 1800 CFM on 24.5–in. Casing sizes requires two sides, one side and bottom or bottom only, to allow sufficient airflow to the furnace.

# MAXIMUM ALLOWABLE EXPOSED VENT LENGTHS INSULATION TABLE

## Table 1 – Maximum Allowable Exposed Vent Length in Unconditioned Space

| Winter Design Temp °F | Unit Size | 40,000* BTUH | | | | | | | | | 60,000 BTUH | | | | | | | | | | | |
|---|---|---|---|---|---|---|---|---|---|---|---|---|---|---|---|---|---|---|---|---|---|---|
| | | Uninsulated | | | 3/8-in. Insulation | | | 1/2-in. Insulation | | | Uninsulated | | | | 3/8-in. Insulation | | | | 1/2-in. Insulation | | | |
| | Pipe Dia. in. | 1 ½ | 2 | 2 ½ | 1 ½ | 2 | 2 ½ | 1 ½ | 2 | 2 ½ | 1 ½ | 2 | 2 ½ | 3 | 1 ½ | 2 | 2 ½ | 3 | 1 ½ | 2 | 2 ½ | 3 |
| | 20 | 20 | 20 | 20 | 20 | 50 | 45 | 20 | 60 | 50 | 20 | 30 | 30 | 25 | 20 | 75 | 65 | 60 | 20 | 85 | 75 | 65 |
| | 0 | 10 | 5 | 5 | 20 | 25 | 20 | 20 | 30 | 25 | 15 | 15 | 10 | 10 | 20 | 40 | 30 | 25 | 20 | 45 | 40 | 30 |
| | -20 | 5 | | | 20 | 15 | 10 | 20 | 20 | 15 | 10 | 5 | | | 20 | 25 | 20 | 15 | 20 | 30 | 25 | 20 |
| | -40 | | | | 15 | 10 | 5 | 15 | 15 | 10 | 5 | | | | 20 | 15 | 15 | 10 | 20 | 20 | 15 | 10 |

| Winter Design Temp °F | Unit Size | 80,000 BTUH | | | | | | | | | | | | | | |
|---|---|---|---|---|---|---|---|---|---|---|---|---|---|---|---|---|
| | | Uninsulated | | | | | 3/8-in. Insulation | | | | | 1/2-in. Insulation | | | | |
| | Pipe Dia. in. | 1 ½ | 2 | 2 ½ | 3 | 4 | 1 ½ | 2 | 2 ½ | 3 | 4 | 1 ½ | 2 | 2 ½ | 3 | 4 |
| | 20 | 15 | 40 | 40 | 35 | 30 | 15 | 50 | 90 | 75 | 65 | 15 | 50 | 70 | 70 | 70 |
| | 0 | 15 | 20 | 15 | 10 | 5 | 15 | 50 | 45 | 35 | 30 | 15 | 50 | 50 | 40 | 35 |
| | -20 | 15 | 10 | 5 | | | 15 | 35 | 30 | 20 | 15 | 15 | 40 | 30 | 25 | 15 |
| | -40 | 10 | 5 | | | | 15 | 25 | 20 | 15 | 5 | 15 | 30 | 25 | 20 | 10 |

| Winter Design Temp °F | Unit Size | 100,000 BTUH | | | | | | | | | | | |
|---|---|---|---|---|---|---|---|---|---|---|---|---|---|
| | | Uninsulated | | | | 3/8-in. Insulation | | | | 1/2-in. Insulation | | | |
| | Pipe Dia. in. | 2 | 2 ½ | 3 | 4 | 2 | 2 ½ | 3 | 4 | 2 | 2 ½ | 3 | 4 |
| | 20 | 20 | 50 | 40 | 35 | 20 | 80 | 95 | 80 | 20 | 80 | 105 | 90 |
| | 0 | 20 | 20 | 15 | 10 | 20 | 55 | 45 | 35 | 20 | 65 | 55 | 45 |
| | -20 | 15 | 10 | 5 | | 20 | 35 | 30 | 20 | 20 | 45 | 35 | 25 |
| | -40 | 10 | 5 | | | 20 | 25 | 20 | 10 | 20 | 30 | 25 | 15 |

| Winter Design Temp °F | Unit Size | 120,000 BTUH | | | | | | | | | 140,000 BTUH | | | | | | | | |
|---|---|---|---|---|---|---|---|---|---|---|---|---|---|---|---|---|---|---|---|
| | | Uninsulated | | | 3/8-in. Insulation | | | 1/2-in. Insulation | | | Uninsulated | | | 3/8-in. Insulation | | | 1/2-in. Insulation | | |
| | Pipe Dia. in. | 2 ½ | 3 | 4 | 2 ½ | 3 | 4 | 2 ½ | 3 | 4 | 2 ½ | 3 | 4 | 2 ½ | 3 | 4 | 2 ½ | 3 | 4 |
| | 20 | 10 | 50 | 40 | 10 | 75 | 95 | 10 | 75 | 105 | 5 | 55 | 50 | 5 | 65 | 105 | 5 | 65 | 125 |
| | 0 | 10 | 20 | 15 | 10 | 55 | 45 | 10 | 65 | 50 | 5 | 25 | 15 | 5 | 65 | 50 | 5 | 65 | 60 |
| | -20 | 10 | 10 | | 10 | 35 | 25 | 10 | 45 | 30 | 5 | 10 | 5 | 5 | 45 | 30 | 5 | 50 | 40 |
| | -40 | 10 | 5 | | 10 | 25 | 15 | 10 | 30 | 20 | 5 | 5 | | 5 | 30 | 20 | 5 | 35 | 25 |

## Maximum Allowable Exposed Vent Length in Unconditioned Space (Metric)

| Winter Design Temp °C | Unit Size | 40,000* BTUH | | | | | | | | | 60,000 BTUH | | | | | | | | | | | |
|---|---|---|---|---|---|---|---|---|---|---|---|---|---|---|---|---|---|---|---|---|---|---|
| | | Uninsulated | | | 3/8-in. Insulation | | | 1/2-in. Insulation | | | Uninsulated | | | | 3/8-in. Insulation | | | | 1/2-in. Insulation | | | |
| | Pipe Dia. mm | 38 | 51 | 64 | 38 | 51 | 64 | 38 | 51 | 64 | 38 | 51 | 64 | 76 | 38 | 51 | 64 | 76 | 38 | 51 | 64 | 76 |
| | -7 | 6.1 | 6.1 | 6.1 | 6.1 | 15.2 | 13.7 | 6.1 | 18.3 | 15.2 | 6.1 | 9.1 | 9.1 | 7.6 | 6.1 | 22.9 | 19.8 | 18.3 | 6.1 | 25.9 | 22.9 | 19.8 |
| | -18 | 3.0 | 1.5 | 1.5 | 6.1 | 7.6 | 6.1 | 6.1 | 9.1 | 7.6 | 4.6 | 4.6 | 3.0 | 3.0 | 6.1 | 12.2 | 9.1 | 7.6 | 6.1 | 13.7 | 12.2 | 9.1 |
| | -29 | 1.5 | | | 6.1 | 4.6 | 3.0 | 6.1 | 6.1 | 4.6 | 3.0 | 1.5 | | | 6.1 | 7.6 | 6.1 | 4.6 | 6.1 | 9.1 | 7.6 | 6.1 |
| | -40 | | | | 4.6 | 3.0 | 1.5 | 4.6 | 4.6 | 3.0 | 1.5 | | | | 6.1 | 4.6 | 4.6 | 3.0 | 6.1 | 6.1 | 4.6 | 3.0 |

| Winter Design Temp °C | Unit Size | 80,000 BTUH | | | | | | | | | | | | | | |
|---|---|---|---|---|---|---|---|---|---|---|---|---|---|---|---|---|
| | | Uninsulated | | | | | 3/8-in. Insulation | | | | | 1/2-in. Insulation | | | | |
| | Pipe Dia. mm | 38 | 51 | 64 | 76 | 102 | 38 | 51 | 64 | 76 | 102 | 38 | 51 | 64 | 76 | 102 |
| | -7 | 4.6 | 12.2 | 12.2 | 10.7 | 9.1 | 4.6 | 15.2 | 27.4 | 22.9 | 19.8 | 4.6 | 15.2 | 21.3 | 21.3 | 21.3 |
| | -18 | 4.6 | 6.1 | 4.6 | 3.0 | 1.5 | 4.6 | 15.2 | 13.7 | 10.7 | 9.1 | 4.6 | 15.2 | 15.2 | 12.2 | 10.7 |
| | -29 | 4.6 | 3.0 | 1.5 | | | 4.6 | 10.7 | 9.1 | 6.1 | 4.6 | 4.6 | 12.2 | 9.1 | 7.6 | 4.6 |
| | -40 | 3.0 | 1.5 | | | | 4.6 | 7.6 | 6.1 | 4.6 | 1.5 | 4.6 | 9.1 | 7.6 | 6.1 | 3.0 |

| Winter Design Temp °C | Unit Size | 100,000 BTUH | | | | | | | | | | | |
|---|---|---|---|---|---|---|---|---|---|---|---|---|---|
| | | Uninsulated | | | | 3/8-in. Insulation | | | | 1/2-in. Insulation | | | |
| | Pipe Dia. mm | 51 | 64 | 76 | 102 | 51 | 64 | 76 | 102 | 51 | 64 | 76 | 102 |
| | -7 | 6.1 | 15.2 | 12.2 | 10.7 | 6.1 | 24.4 | 28.9 | 24.4 | 6.1 | 24.4 | 32.0 | 27.4 |
| | -18 | 6.1 | 6.1 | 4.6 | 3.0 | 6.1 | 16.8 | 13.7 | 10.7 | 6.1 | 19.8 | 16.7 | 13.7 |
| | -29 | 4.6 | 3.0 | 1.5 | | 6.1 | 10.7 | 9.1 | 6.1 | 6.1 | 13.7 | 10.7 | 7.6 |
| | -40 | 3.0 | 1.5 | | | 6.1 | 7.6 | 6.1 | 3.0 | 6.1 | 9.1 | 7.6 | 4.6 |

| Winter Design Temp °C | Unit Size | 120,000 BTUH | | | | | | | | | 140,000 BTUH | | | | | | | | |
|---|---|---|---|---|---|---|---|---|---|---|---|---|---|---|---|---|---|---|---|
| | | Uninsulated | | | 3/8-in. Insulation | | | 1/2-in. Insulation | | | Uninsulated | | | 3/8-in. Insulation | | | 1/2-in. Insulation | | |
| | Pipe Dia. mm | 64 | 76 | 102 | 64 | 76 | 102 | 64 | 76 | 102 | 64 | 76 | 102 | 64 | 76 | 102 | 64 | 76 | 102 |
| | -7 | 3.0 | 15.2 | 12.2 | 3.0 | 22.9 | 28.9 | 3.0 | 22.9 | 32.0 | 1.5 | 16.7 | 15.2 | 1.5 | 19.8 | 32.0 | 1.5 | 19.8 | 38.1 |
| | -18 | 3.0 | 6.1 | 4.6 | 3.0 | 16.8 | 13.7 | 3.0 | 19.8 | 15.2 | 1.5 | 7.6 | 4.6 | 1.5 | 19.8 | 15.2 | 1.5 | 19.8 | 18.3 |
| | -29 | 3.0 | 3.0 | | 3.0 | 10.7 | 7.6 | 3.0 | 13.7 | 9.1 | 1.5 | 3.0 | 1.5 | 1.5 | 13.7 | 9.1 | 1.5 | 15.2 | 12.2 |
| | -40 | 3.0 | 1.5 | | 3.0 | 7.6 | 4.6 | 3.0 | 9.1 | 6.1 | 1.5 | 1.5 | | 1.5 | 9.1 | 6.1 | 1.5 | 35 | 7.6 |

* Pipe length (ft) specified for maximum pipe lengths located in unconditioned spaces. Pipes located in unconditioned space cannot exceed total allowable pipe length calculated from Table 2.

† Insulation thickness based on R value of 3.5 per in.

# MAXIMUM EQUIVALENT VENT LENGTH

***NOTE: Maximum Equivalent Vent Length (MEVL) includes standard and concentric vent termination and does NOT include elbows. Use Table 3 - Deductions from Maximum Equivalent Vent Length to determine allowable vent length for each application.***

**Table 2 – Maximum Equivalent Vent Length - Ft.**

| Ft. | | | | | | | | | | | | | | | | | |
|---|---|---|---|---|---|---|---|---|---|---|---|---|---|---|---|---|---|
| Unit Size | | 60,000 | | | | 80,000 | | | | | 100,000 | | | | 120,000 | | |
| Altitude (feet) | Pipe Dia. (in) | 1 ½ | 2 | 2 ½ | 3 | 1 ½ | 2 | 2 ½ | 3 | 4 | 2 | 2 ½ | 3 | 4 | 2 ½ | 3 | 4 |
| | 0–2000 | 50 | 100 | 175 | 200 | 30 | 95 | 130 | 175 | 200 | 45 | 80 | 175 | 200 | 10 | 75 | 185 |
| | 2001–3000 | 45 | 95 | 165 | 185 | | 70 | 125 | 165 | 185 | 40 | 75 | 165 | 185 | | 70 | 175 |
| | 3001–4000 | 40 | 90 | 155 | 175 | 25 | | 115 | 155 | 175 | 38 | | 155 | 175 | 5 | 65 | 165 |
| | 4001–4500 | 35 | 85 | 150 | 170 | 23 | | 110 | 150 | 165 | 36 | 70 | | 170 | N/A | 60 | 160 |
| | 4501–5000 | | 80 | | 165 | 22 | | | 145 | 160 | | | 150 | 165 | | | |
| | 5001–6000 | 37 | 75 | 140 | 155 | | | 100 | 135 | 150 | 33 | | 140 | 155 | | | 155 |
| | 6001–7000 | 35 | 70 | 130 | 145 | 20 | | 90 | 125 | 140 | 31 | | 135 | 145 | | 50 | 140 |
| | 7001–8000 | 32 | 66 | 120 | 135 | 18 | 66 | | 120 | 125 | 29 | 66 | 125 | 135 | | 46 | 130 |
| | 8001–9000 | 30 | 62 | 115 | 125 | 17 | 62 | 80 | 110 | 115 | 27 | 62 | 115 | 125 | | 43 | 120 |
| | 9001–10000 | 27 | 57 | 105 | 115 | 15 | 57 | 75 | 100 | 105 | 24 | 57 | 100 | 115 | | 39 | 115 |

| Meters | | | | | | | | | | | | | | | | | |
|---|---|---|---|---|---|---|---|---|---|---|---|---|---|---|---|---|---|
| Unit Size | | 60,000 | | | | 80,000 | | | | | 100,000 | | | | 120,000 | | |
| Altitude (meters) | Pipe Dia. (mm) | 38 | 51 | 64 | 76 | 38 | 51 | 64 | 76 | 102 | 51 | 64 | 76 | 102 | 64 | 76 | 102 |
| | 0–610 | 15.2 | 30.4 | 53.3 | 60.9 | 9.1 | 28.9 | 39.6 | 53.3 | 60.9 | 13.7 | 24.3 | 53.3 | 60.9 | 3.0 | 22.8 | 56.3 |
| | 611–914 | 13.7 | 28.9 | 50.2 | 56.3 | | 21.3 | 38.1 | 50.2 | 56.3 | 12.1 | 22.8 | 50.2 | 56.3 | | 21.3 | 53.3 |
| | 915–1219 | 12.1 | 27.4 | 47.2 | 53.3 | 7.6 | | 35.0 | 47.2 | 53.3 | 11.5 | | 47.2 | 53.3 | 1.5 | 19.8 | 50.2 |
| | 1220–1370 | 10.6 | 25.9 | 45.7 | 51.8 | 7.0 | | 33.5 | 45.7 | 50.2 | 10.9 | 21.3 | | 51.8 | NA | 18.2 | 48.7 |
| | 1371–1524 | | 24.3 | | 50.2 | 6.7 | | | 44.1 | 48.7 | | | 45.7 | 50.2 | | | |
| | 1525–1829 | 11.2 | 22.8 | 42.6 | 47.2 | | | 30.4 | 41.1 | 45.7 | 10.0 | | 42.6 | 47.2 | | | 47.2 |
| | 1830–2134 | 10.6 | 21.3 | 39.6 | 44.1 | 6.0 | | 27.4 | 38.1 | 42.6 | 9.4 | | 41.1 | 44.1 | | 15.2 | 42.6 |
| | 2135–2438 | 9.7 | 20.1 | 36.5 | 41.1 | 5.4 | 20.1 | | 36.5 | 38.1 | 8.8 | 20.1 | 38.1 | 41.1 | | 14.0 | 39.6 |
| | 2439–2743 | 9.1 | 18.8 | 35.0 | 38.1 | 5.1 | 18.8 | 24.3 | 33.5 | 35.0 | 8.2 | 18.8 | 35.0 | 38.1 | | 13.1 | 36.5 |
| | 2744–3048 | 8.2 | 17.3 | 32.0 | 35.0 | 4.5 | 17.3 | 22.8 | 30.4 | 32.0 | 7.3 | 17.3 | 30.4 | 35.0 | | 11.8 | 35.0 |

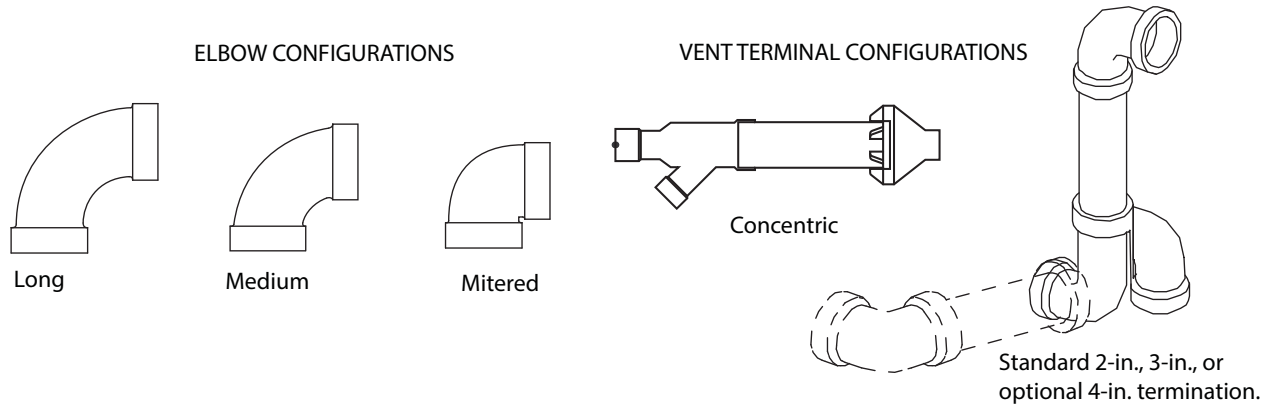


A13110

**Table 3 – Deductions from Maximum Equivalent Vent Length - Ft. (M)**

| Pipe Diameter (in): | 1-1/2 | | 2 | | 2-1/2 | | 3 | | 4 | |
|---|---|---|---|---|---|---|---|---|---|---|
| **Mitered 90° Elbow** | 8 | (2.4) | 8 | (2.4) | 8 | (2.4) | 8 | (2.4) | 8 | (2.4) |
| **Medium Radius 90° Elbow** | 5 | (1.5) | 5 | (1.5) | 5 | (1.5) | 5 | (1.5) | 5 | (1.5) |
| **Long Radius 90° Elbow** | 3 | (0.9) | 3 | (0.9) | 3 | (0.9) | 3 | (0.9) | 3 | (0.9) |
| **Mitered 45° Elbow** | 4 | (1.2) | 4 | (1.2) | 4 | (1.2) | 4 | (1.2) | 4 | (1.2) |
| **Medium Radius 45° Elbow** | 2.5 | (0.8) | 2.5 | (0.8) | 2.5 | (0.8) | 2.5 | (0.8) | 2.5 | (0.8) |
| **Long Radius 45° Elbow** | 1.5 | (0.5) | 1.5 | (0.5) | 1.5 | (0.5) | 1.5 | (0.5) | 1.5 | (0.5) |
| **Tee** | 16 | (4.9) | 16 | (4.9) | 16 | (4.9) | 16 | (4.9) | 16 | (4.9) |
| **Concentric Vent Termination** | NA | | 0 | (0.0) | NA | | 0 | (0.0) | NA | |
| **Standard Vent Termination** | 0 | (0.0) | 0 | (0.0) | 0 | (0.0) | 0 | (0.0) | 0 | (0.0) |

**NOTES**:
1. Use only the smallest diameter pipe possible for venting. Over–sizing may cause flame disturbance or excessive vent terminal icing or freeze–up.
2. NA – Not allowed. Pressure switch will not close, or flame disturbance may result.
3. Vent sizing for Canadian installations over 4500 ft. (1370 M) above sea level are subject to acceptance by the local authorities having jurisdiction.
4. Size both the combustion air and vent pipe independently, then use the larger size for both pipes.
5. Assume the two 45° elbows equal one 90° elbow. Wide radius elbows are desirable and may be required in some cases.
6. Elbow and pipe sections within the furnace casing and at the vent termination should not be included in vent length or elbow count.
7. The minimum pipe length is 5 ft. (2 M) linear feet (meters) for all applications.
8. Use 3–in. (76 mm) diameter vent termination kit for installations requiring 4–in. (102 mm) diameter pipe.

## Venting System Length Calculations

The Total Equivalent Vent Length (TEVL) for **EACH** combustion air or vent pipe equals the length of the venting system, plus the equivalent length of elbows used in the venting system from Table 3.

Standard vent terminations or factory accessory concentric vent terminations count for zero deduction.

See vent system manufacturer's data for equivalent lengths of flexible vent pipe or other termination systems. **DO NOT ASSUME** that one foot of flexible vent pipe equals one foot of straight PVC/ABS DWV vent pipe.

Compare the Total Equivalent Vent Length to the Maximum Equivalent Vent Lengths in Table 2.

## Example 1

A direct-vent 60,000 BTUH furnace installed at 2100 ft. (640M). Venting system includes **FOR EACH PIPE:**
70 feet (22 M) of vent pipe, 65 feet (20 M) of combustion air inlet pipe, (3) 90º long-radius elbows, (2) 45º long-radius elbows, and a factory accessory concentric vent kit.

Can this application use 2" (50 mm ND) PVC/ABS DWV vent piping?

| | | | | | | |
|---|---|---|---|---|---|---|
| Measure the required linear length of air inlet and vent pipe; insert the longest of the two here | | | | | 70 ft. (22 M) | Use length of the longer of the vent or air inlet piping system |
| Add equiv length of (3) 90º long-radius elbows (use the highest number of elbows for either the vent or inlet pipe) | 3 | x | 3 ft. (0.9 M) | = | 9 ft. (2.7 M) | From Table 3 |
| Add equiv length of (2) 45º long-radius elbows (use the highest number of elbows for either the vent or inlet pipe) | 2 | x | 1.5 ft. (0.5 M) | = | 3 ft. (0.9 M) | From Table 3 |
| Add equiv length of factory concentric vent term | | | | | 0 ft. | From Table 3 |
| Add correction for flexible vent pipe, if any | | | | | 0 ft. | From Vent Manufacturer's instructions; zero for PVC/ABS DWV |
| Total Equivalent Vent Length (TEVL) | | | | | 82 ft. (25 M) | Add all of the above lines |
| | | | | | | |
| Maximum Equivalent Vent Length (MEVL) | | | | | 95 ft. (29 M) | For 2" pipe from Table 2 |
| **Is TEVL less than MEVL?** | | | | | **YES** | **Therefore, 2" pipe MAY be used** |

## Example 2

A direct-vent 60,000 BTUH furnace installed at 2100 ft. (640M). Venting system includes **FOR EACH PIPE:**
100 feet (30 M) of vent pipe, 95 feet (29 M) of combustion air inlet pipe, (3) 90º long-radius elbows, and a polypropylene concentric vent kit. Also includes 20 feet (6.1 M) of flexible polypropylene vent pipe, included within the 100 feet (30 M) of vent pipe.

VERIFY FROM POLYPROPYLENE VENT MANUFACTURER'S INSTRUCTIONS for the multiplier correction for flexible vent pipe.

Can this application use 60mm o.d. (2") polypropylene vent piping? If not, what size piping can be used?

| | | | | | | |
|---|---|---|---|---|---|---|
| Measure the required linear length of **RIGID** air inlet and vent pipe; insert the longest of the two here: 100 ft. Of rigid pipe – 20 ft. Of flexible pipe | | | | = | 80 ft. (24 M) | Use length of the longer of the vent or air inlet piping system |
| Add equiv length of (3) 90º long-radius elbows (use the highest number of elbows for either the vent or inlet pipe) | 3 | x | 5 ft. (1.5 M) | = | 15 ft. (4.6 M) | Example from polypropylene vent manufacturer's instructions, Verify from vent manufacturer's instructions. |
| Add equiv length of 45º long-radius elbows (use the highest number of elbows for either the vent or inlet pipe) | 0 | x | | = | 0 ft. (0 M) | |
| Add equiv length of factory concentric vent term | 9 | x | 3.3 ft (0.9 M) | = | 30 ft. (9 M) | |
| Add correction for flexible vent pipe, if any | 2* | x | 20 ft. (6.1 M) | = | 36 ft. (11 M) | |
| * VERIFY FROM VENT MANUFACTURER'S INSTRUCTIONS; For example only, assume 1 meter of flexible 60mm (2") or 80mm (3") polypropylene pipe equals 2.0 meters (6.5 ft.) of PVC/ABS pipe. | | | | | | |
| Total Equivalent Vent Length (TEVL) | | | | | 165 ft. (50 M) | Add all of the above lines |
| | | | | | | |
| Maximum Equivalent Vent Length (MEVL) | | | | | 95 ft. (29 M) | For 2" pipe from Table 2 |
| **Is TEVL less than MEVL?** | | | | | **NO** | **Therefore, 60mm (2") pipe may NOT be used; try 80mm (3")** |
| | | | | | | |
| Maximum Equivalent Vent Length (MEVL) | | | | | 185 ft. (57 M) | For 3" pipe from Table 2 |
| **Is TEVL less than MEVL?** | | | | | **YES** | **Therefore, 80mm (3") pipe MAY be used** |

## RETURN AIR TEMPERATURE

This furnace is designed for continuous return-air minimum temperature of 60°F (15°C) db or intermittent operation down to 55°F (13°C) db such as when used with a night setback thermometer. Return-air temperature must not exceed 80°F (27°C) db. Failure to follow these return air limits may affect reliability of heat exchangers, motors and controls.

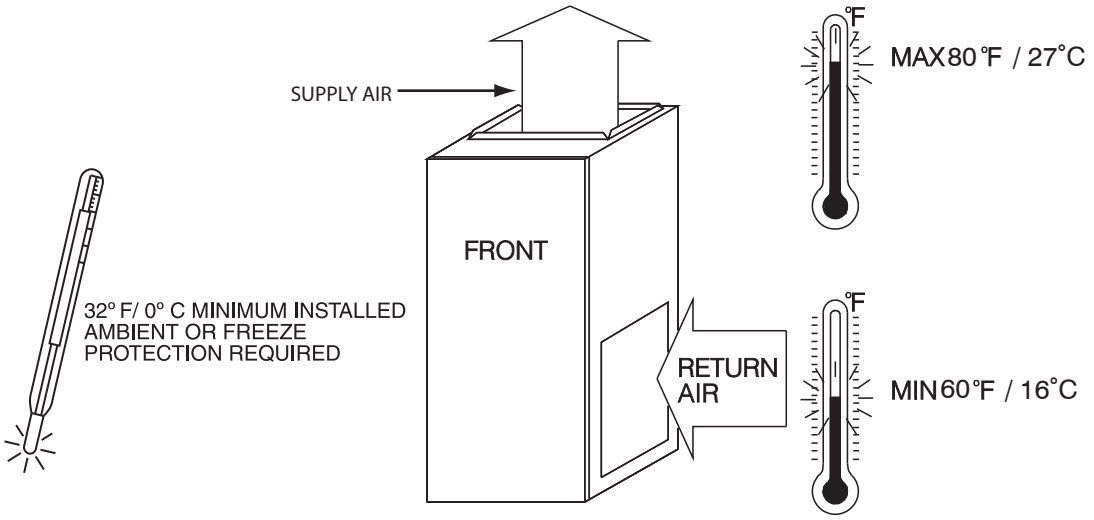


A10490

## MINIMUM CLEARANCES TO COMBUSTIBLE MATERIALS

| POSITION | CLEARANCE |
|---|---|
| Rear | 0 (0 mm) |
| Front (Combustion air openings in furnace and in structure) | 1 in. (25 mm) |
| Required for service** | 24 in. (610 mm)* |
| All Sides of Supply Plenum** | 1 in. (25 mm) |
| Sides | 0 (0 mm) |
| Vent | 0 (0 mm) |
| Top of Furnace | 1 in. (25 mm) |

* Recommended
**Consult your local building codes

## VENTILATED COMBUSTION-AIR PIPE FOR ATTIC/CRAWLSPACE APPLICATIONS

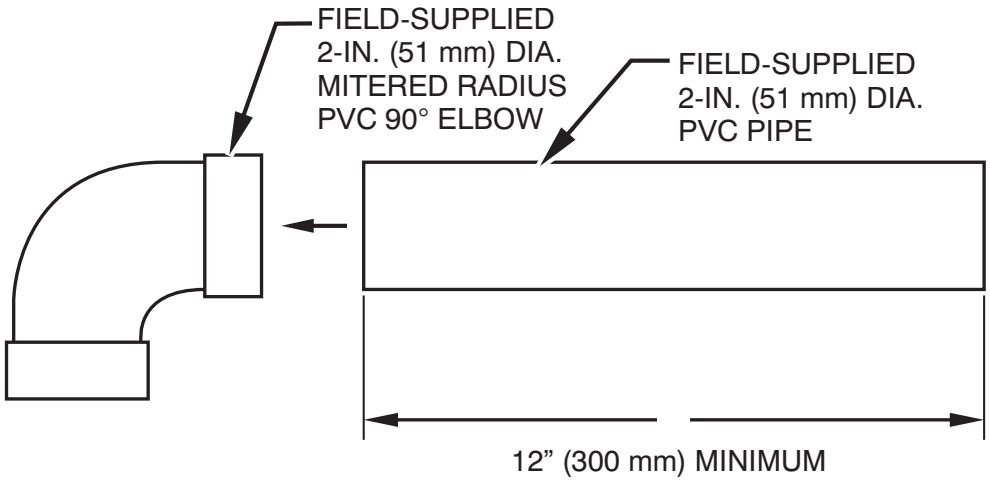


A12376

**NOTE**: See Installation Instructions for specific venting configurations.

# DOWNFLOW SUBBASE

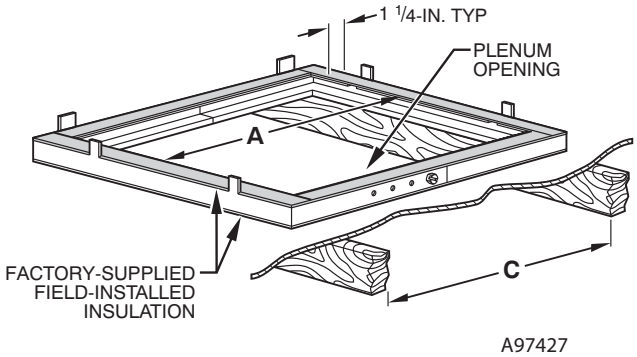


Assembled

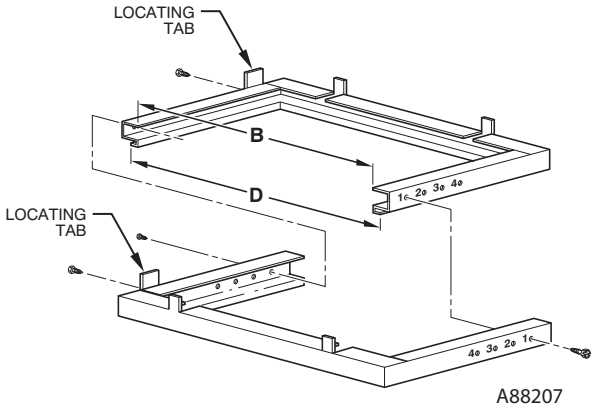


Disassembled

59MN7A

| DIMENSIONS (IN. / MM) | | | | | | |
|---|---|---|---|---|---|---|
| FURNACE CASING WIDTH | FURNACE IN DOWNFLOW APPLICATION | PLENUM OPENING* | | FLOOR OPENING | | HOLE NO. FOR WIDTH ADJUSTMENT |
| | | A | B | C | D | |
| 17–1/2 (444.5) | Furnace with or without Cased Coil Assembly or Coil Box | 15–1/8 (384.2) | 19 (482.6) | 16–3/4 (425.5) | 20–3/8 (517.5) | 3 |
| 21 (533.4) | Furnace with or without Cased Coil Assembly or Coil Box | 18–5/8 (396.4) | 19 (482.6) | 20–1/4 (514.4) | 20–3/8 (517.5) | 2 |
| 24–1/2 (622.3) | Furnace with or without Cased Coil Assembly or Coil Box | 22–1/8 (562.0) | 19 (482.6) | 23–3/4 (603.3) | 20–3/8 (517.5) | 1 |

*The plenum should be constructed 1/4–in. (6 mm) smaller in width and depth than the plenum dimensions shown above.

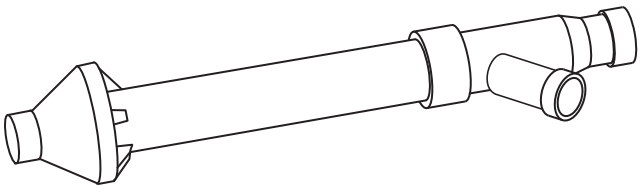

**Concentric Vent Kit**

A93086

A concentric vent kit allows vent and combustion-air pipes to terminate through a single exit in a roof or side wall. One pipe runs inside the other allowing venting through the inner pipe and combustion air to be drawn in through the outer pipe.

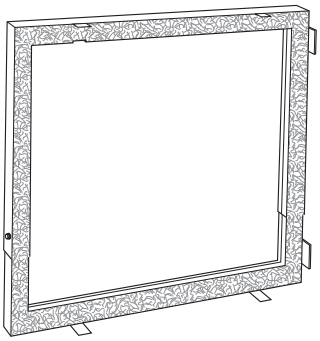

**Downflow Subbase**

A88202

One base fits all furnace sizes. The base is designed to be installed between the furnace and a combustible floor when no coil box is used or when a coil box other than a Carrier cased coil is used. It is CSA design certified for use with Carrier branded furnaces when installed in downflow applications.

# MEDIA FILTER CABINET

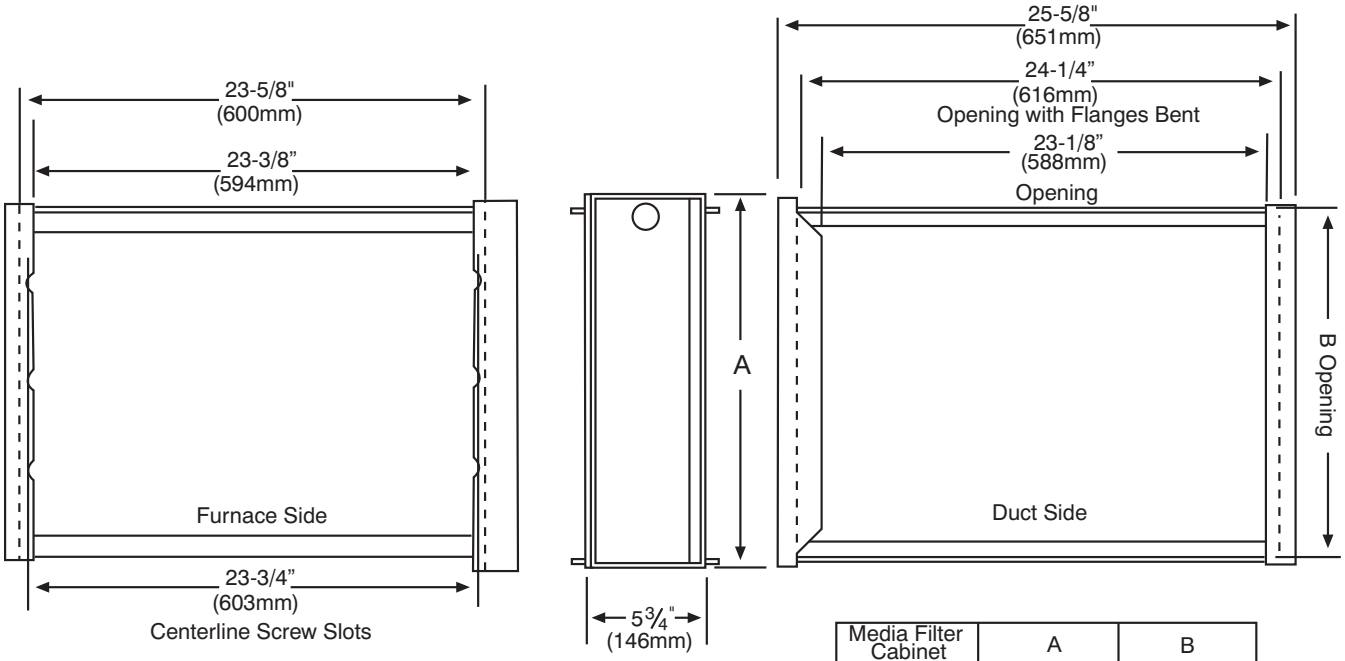


| Media Filter Cabinet | A | B |
|---|---|---|
| 16" (406mm) | 17" (432mm) | 16" (406mm) |
| 20" (508mm) | 21" (533mm) | 20" (508mm) |
| 24" (610mm) | 25" (635mm) | 24" (610mm) |

NOTE: Media cabinet is matched to the bottom opening on furnace. May also be used for side return.

A12428

59MN7A

# TYPICAL WIRING SCHEMATIC

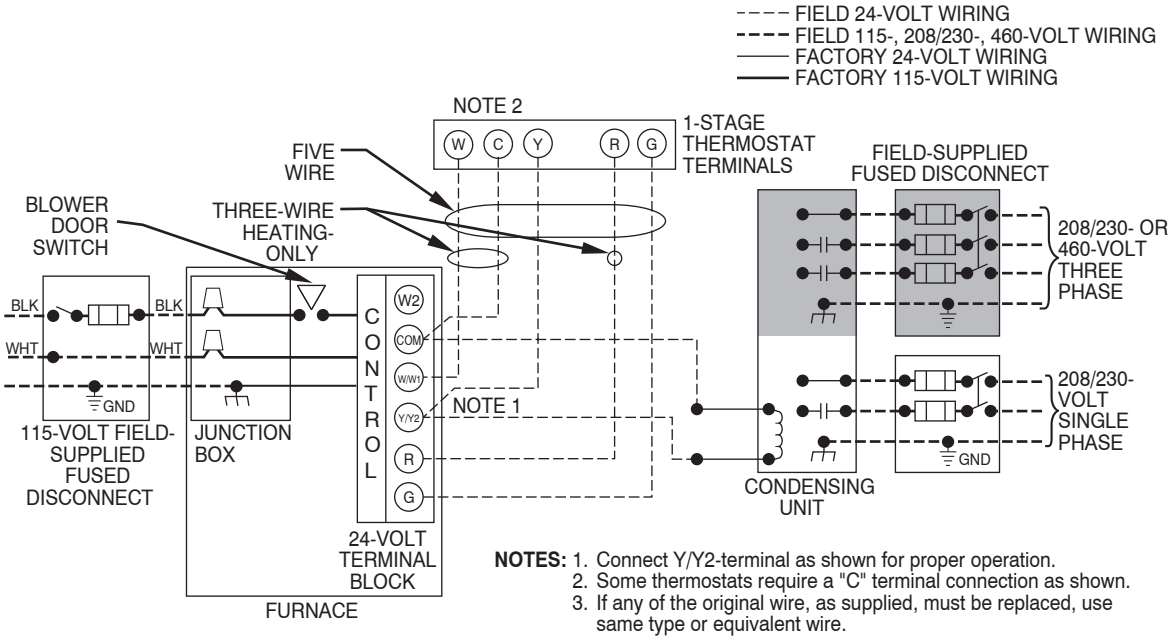


A11401

# DIMENSIONAL DRAWING

NOTES:
1. Doors may vary by model.
2. Minimum return-air openings at furnace, based on metal duct. If flex duct is used, see flex duct manufacturer's recommendations for equivalent diameters.
   a. For 800 CFM-16-in. (406 mm) round or 14 1/2 x 12-in. (368 x 305 mm) rectangle.
   b. For 1200 CFM-20-in. (508 mm) round or 14 1/2 x 19 1/2-in. (368 x 495 mm) rectangle.
   c. For 1600 CFM-22-in. (559 mm) round or 14 1/2 x 22 1/16-in. (368 x 560mm) rectangle.
   d. Return air above 1800 CFM at 0.5 in. w.c. ESP on 24.5" casing, requires one of the following configurations: 2 sides, 1 side and a bottom or bottom only. See Air Delivery table in this document for specific use to allow for sufficient airflow to the furnace.
3. Vent and Combustion air pipes through blower compartment must use accessory "Vent Kit - Through the Cabinet". See accessory list for current part number.

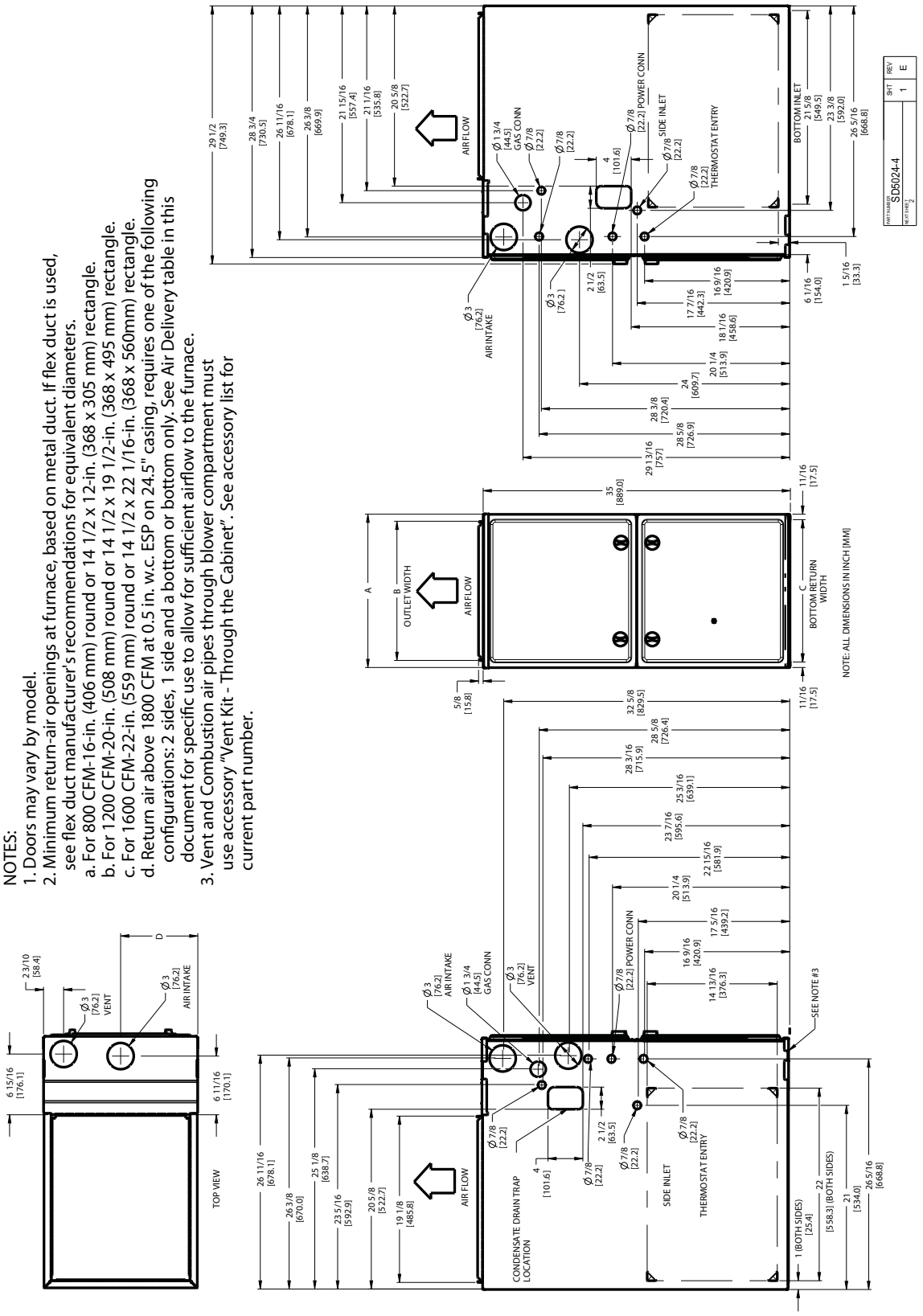


A12267

| 59MN7 FURNACE SIZE | A CABINET WIDTH | B OUTLET WIDTH | C BOTTOM INLET WIDTH | D AIR INTAKE | SHIP WT. – LB (KG) |
|---|---|---|---|---|---|
| 060 – 14 | 17 – 1/2 (445) | 15 – 7/8 (403) | 16 (406) | 8 – 3/4 (222) | 154.0 (69.3) |
| 080 – 14 | | | | | 164.0 (73.8) |
| 060 – 20 | 21 (533) | 19 – 3/8 (492) | 19 – 1/2 (495) | 10 – 1/2 (267) | 158.5 (72.0) |
| 080 – 20 | | | | | 168.5 (76.6) |
| 100 – 22 | | | | | 178.5 (80.3) |
| 120 – 22 | 24 – 1/2 (622) | 22 – 7/8 (581) | 23 (584) | 12 – 1/4 (311) | 202.5 (91.1) |

# GUIDE SPECIFICATIONS

## General

### System Description

Furnish a _____ 4-way multipoise modulating gas-fired condensing furnace for use with natural gas or propane (factory- authorized conversion kit required for propane); furnish external media cabinet for use with accessory media filter or standard filter.

### Quality Assurance

Unit will be designed, tested and constructed to the current ANSI Z 21.47/CSA 2.3 design standard for gas-fired central furnaces.

Unit will be third party certified by CSA to the current ANSI Z 21.47/CSA 2.3 design standard for gas-fired central furnaces. Unit will carry the CSA Blue Star® and Blue Flame® labels. Unit efficiency testing will be performed per the current DOE test procedure as listed in the Federal Register.

Unit will be certified for capacity and efficiency and listed in the latest AHRI Consumer's Directory of Certified Efficiency Ratings.

Unit will carry the current Federal Trade Commission Energy Guide efficiency label.

### Delivery, Storage, and Handling

Unit will be shipped as single package only and is stored and handled per unit manufacturer's recommendations.

### Warranty (for inclusion by specifying engineer)

U.S. and Canada only. Warranty certificate available upon request.

### Equipment

Blower Wheel and ECM Blower Motor

Galvanized blower wheel shall be centrifugal type, statically and dynamically balanced. Blower motor of ECM type shall be permanently lubricated with sealed ball bearings, of _____hp, and have infinitely variable speed from 300-1300 RPM operating only when motor inputs are provided. Blower motor shall be direct drive and soft mounted to the blower housing to reduce vibration transmission.

Filters

Furnace shall have reusable-type filters. Filter shall be _____ in. (mm) X _____ in. (mm). An accessory highly efficient Media Filter is available as an option. _____ Media Filter.

Casing

Casing shall be of .030 in. thickness minimum, pre-painted steel.

Draft Inducer Motor

Draft inducer motor shall be variable-speed design.

Primary Heat Exchangers

Primary heat exchangers shall be 3-Pass corrosion- resistant aluminized steel of fold-and-crimp sectional design and applied operating under negative pressure.

Secondary Heat Exchangers

Secondary heat exchangers shall be of a stainless steel flow-through of fin-and-tube design and applied operating under negative pressure.

Controls

Controls shall include a micro-processor-based integrated electronic control board with at least 16 service troubleshooting codes displayed via diagnostic flashing LED light on the control, a self-test feature that checks all major functions of the furnace, and a replaceable automotive-type circuit protection fuse. Multiple operational settings available, including separate blower speeds for all modulating heating capacities, low cooling, high cooling and continuous fan. Continuous fan speed may be adjusted from the thermostat. Cooling airflow will be selectable between 325 to 400 CFM per ton of air conditioning. Features will also include temporary reduced airflow in the cooling mode for improved dehumidification when an Infinity Control or TP-PRH edge® is selected as the thermostat.

### Operating Characteristics

Heating capacity shall be _____ Btuh input; _____ Btuh output capacity.

Fuel Gas Efficiency shall be _____ AFUE.

Air delivery shall be _____ cfm minimum at 0.50 in. W.C. external static pressure.

Dimensions shall be: depth_____in. (mm); width _____in. (mm); height_____in. (mm) (casing only). Height shall be _____in. (mm) with A/C coil and _____in. (mm) overall with plenum.

### Electrical Requirements

Electrical supply shall be 115 volts, 60 Hz, single-phase (nominal). Minimum wire size shall be _____AWG; maximum fuse size of HACR-type designated circuit breaker shall be _____ amps.

### Special Features

Refer to section of the product data identifying accessories and descriptions for specific features and available enhancements.

Copyright 2017 Carrier Corp. • 7310 W. Morris St. • Indianapolis, IN 46231

Edition Date: 02/17

**Catalog No: 59MN7A−08PD**

**Manufacturer reserves the right to change, at any time, specifications and designs without notice and without obligations.**

Replaces: 59MN7A−07PD