59SC2A
Comfort™ Series Single−Stage 4−Way Multipoise Condensing Gas Furnace Series 100

Carrier
turn to the experts

Product Data

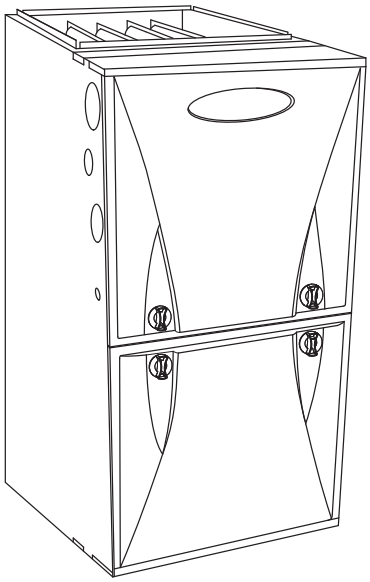

A11263

The 59SC2 Multipoise Comfort Series Condensing Gas Furnace features energy efficiency of 92.1% AFUE gas efficiency and workhorse PSC blower motor. This gas furnace also features 4-way multipoise installation flexibility, and is available in eight model sizes. The 59SC2 can be vented for direct vent/two-pipe, ventilated combustion air, or single-pipe applications. All units meet California Air Quality Management District emission requirements, are design certified in Canada, and are certified for mobile/manufactured home use.

STANDARD FEATURES

- 4-Way multipoise design for upflow, downflow or horizontal installation.
- Installation flexibility with a 360-degree rotating elbow.
- More than twelve different venting options, including optional through-the cabinet downflow and horizontal venting.
- Ideal condensing furnace height 35” cabinet: short enough for taller coils, but still allows enough room for service.
- Silicon Nitride Power Heat™ Hot Surface Igniter.
- Aluminized-steel primary heat exchanger.
- Stainless steel condensing secondary heat exchanger.
- High-quality corrosion-resistant prepainted steel cabinet with hemmed edges for safety.
- Factory-configured ready for upflow applications.
- Direct-vent/sealed combustion, single-pipe venting or ventilated combustion air.
- PSC blower motor, single-speed inducer motor, and single-stage gas valve.
- Self-diagnostics with SuperBrite LED.
- Approved for Twinning applications (60-14 through 120-60 sizes, only)
- Propane convertible (see accessory list).
- Approved for Manufactured Housing/Mobile Home applications with MH accessory kit.
- Convenient Air Purifier and Humidifier connections.
- Residential installations may be eligible for consumer financing through the Retail Credit program.
- Certified to leak 2% or less of nominal air conditioning CFM delivered when pressurized to 1-in. water column with all present air inlets, air outlets, and condensate drain port(s) sealed.

LIMITED WARRANTY*

- 10 year parts and 20 year heat exchanger limited warranty to the original purchaser upon timely registration.
- Limited warranty period is five years for parts and twenty years for the heat exchanger if not registered within 90 days of installation.†

* For owner occupied, residential applications.

†Jurisdictions where warranty benefits cannot be conditioned on registration will receive registered limited warranty benefits.

Comfort™ SERIES

Certified System ISO 9001 QMI-SAI Global

DESIGN CERTIFIED®

CERTIFIED®

AHRI CERTIFIED™ www.ahridirectory.org

Use of the AHRI Certified TM Mark indicates a manufacturer's participation in the program For verification of certification for individual products, go to www.ahridirectory.org.

SAP ORDERING NO.	CASING DIMENSIONS (IN.)			RATED HEATING OUTPUT†		HEATING AIRFLOW		COOLING CFM @ 0.5 ESP (in. WC)	MOTOR HP-SPEED	APPROX SHIP WEIGHT (LB)
	H	D	W	(BTUH)	AFUE	CFM‡	Heating ESP (in. WC)			
59SC2A040S14--10	35	29.5	14.2	39,000	92.1%	820	0.10	625-905	1/2 - 4	123
59SC2A060S14--10	35	29.5	14.2	58,000	92.1%	840	0.12	675-1130	1/2 - 4	127
59SC2A060S17--14	35	29.5	17.5	58,000	92.1%	980	0.12	650-1420	1/2 - 5	144
59SC2A080S17--16	35	29.5	17.5	78,000	92.1%	1040	0.15	810-1600	3/4 - 5	154
59SC2A080S21--20	35	29.5	21.0	78,000	92.1%	1500	0.15	1225-2025	3/4 - 5	162
59SC2A100S21--14	35	29.5	21.0	97,000	92.1%	1565	0.20	695-1565	3/4 - 5	169
59SC2A100S21--20	35	29.5	21.0	97,000	92.1%	1520	0.20	1225-2145	3/4 - 5	169
59SC2A120S24--20	35	29.5	24.5	117,000	92.1%	2065	0.20	1245-2065	3/4 - 5	186

† Capacity in accordance with DOE test procedures. See rating plate.
‡ Heating CFM at factory default blower motor heating tap settings.
ESP – External Static Pressure

FEATURES AND BENEFITS

HYBRID HEAT® Dual Fuel System — This system can provide more control over your monthly energy bills by automatically selecting the most economical method of heating. With HYBRID HEAT components, our system automatically switches between the gas furnace and the single-stage electric heat pump as outside temperatures change to maintain greater efficiency and comfort than with any traditional single-source heating system. The heat pump also delivers high-efficiency cooling in the summer.

Power Heat™ Igniter — Carrier's unique SiN igniter is not only physically robust but it is also electrically robust. It is capable of running at line voltage and does not require complex voltage regulators as do other brands. This unique feature further enhances the gas furnace reliability and continues Carrier's tradition of technology leadership and innovation in providing a reliable and durable product.

Reliable Heat Exchanger Design — The aluminized steel, clamshell primary heat exchanger was re-engineered to achieve greater efficiency out of a smaller size. The first two passes of the heat exchanger are based on the current 80% product, a design with more than ten years of field-proven performance and success. These innovations, paired with the continuation of a crimped, no-weld seam create an efficient, robust design for this essential component.

The condensing heat exchanger, a stainless steel fin and tube design, is positioned in the furnace to extract additional heat. Stainless steel coupling box componentry between heat exchangers has exceptional corrosion resistance in both natural gas and propane applications.

4-Way Multipoise Design — One model for all applications – there is no need to stock special downflow or horizontal models when one unit will do it all. The new heat exchanger design allows these units to achieve the certified AFUE in all positions.

Direct or Single-pipe Venting, or Optional Ventilated Combustion Air — This furnace can be installed as a 2-pipe (Direct Vent) furnace, in an optional ventilated combustion air application, or in single-pipe, non-direct vent applications. This provides added flexibility to meet diverse installation needs.

Sealed Combustion System — This furnace brings in combustion air from outside the furnace, which results in especially quiet operation. By sealing the entire combustion vestibule, the entire furnace can be made quieter, not just the sound of the burners.

Monoport Burners — The burners are specially designed and finely tuned for smooth, quiet combustion and economical operation.

Bottom Closure — Factory-installed for side return; easily removable for bottom return. The multi-use bottom closure can also serve for roll-out protection in horizontal applications, and act as the bottom closure for the optional return air base accessory.

Blower Access Panel Switch — Automatically shuts off 115-v power to furnace whenever blower access panel is opened.

Quality Registration — Our furnaces are engineered and manufactured under an ISO 9001 registered quality system.

Certifications — This furnace is CSA (AGA and CGA) design certified for use with natural and propane gases. The furnace is factory-shipped for use with natural gas. A CSA listed gas conversion kit is required to convert furnace for use with propane gas. The efficiency is GAMA efficiency rating certified. This furnace meets California Air Quality Management District emission requirements.

SPECIFICATIONS

Heating Capacity and Efficiency			040-10	060-10	060-14	080-16	080-20	100-14	100-20	120-20
Input	High Heat	(BTUH)	40,000	60,000	60,000	80,000	80,000	100,000	100,000	120,000
Output	High Heat	(BTUH)	39,000	58,000	58,000	78,000	78,000	97,000	97,000	117,000
Efficiency		AFUE % (ICS)	92.1	92.1	92.1	92.1	92.1	92.1	92.1	92.1
Certified Temperature Rise Range ºF (ºC)		High Heat	40 - 70 (22 - 39)	40 - 70 (22 - 39)	40 - 70 (22 - 39)	40 - 70 (22 - 39)	40 - 70 (22 - 39)	40 - 70 (22 - 39)	40 - 70 (22 - 39)	40 - 70 (22 - 39)

Airflow Capacity and Blower Data		040-10	060-10	060-14	080-16	080-20	100-14	100-20	120-20
Certified External Static Pressure (in. w.c.)	Heating	0.10	0.12	0.12	0.15	0.15	0.20	0.20	0.20
	Cooling	0.5	0.5	0.5	0.5	0.5	0.5	0.5	0.5
Airflow Delivery @ Rated ESP (CFM)	High Heat	820	840	980	1040	1500	1565	1520	2210
	Cooling	905	1130	1420	1600	2025	1565	2145	2065
Cooling Capacity (tons) @ 400, 350 CFM/ton	CFM/ton	2	2.5	3.5	4	5	4	5	5
	CFM/ton	2.5	3	4	4.5	5.5	4.5	6	6
Direct-Drive Motor Type		Permanent Split Capacitor (PSC)							
Direct-Drive Motor HP		0.5	0.5	0.5	0.75	0.75	0.75	0.75	0.75
Motor Full Load Amps		6.2	6.2	6.8	7.9	13.8	6.5	13.8	14.1
RPM Range		500 - 1150							
Speed Selections		4	4	5	5	5	5	5	5
Blower Wheel Dia x Width	in.	11 x 7	11 x 7	11 x 8	11 x 8	11 x 10	11 x 10	11 x 10	11 x 11
Air Filtration System		Field Supplied							
Filter Used for Certified Watt Data		KGAWF1606UFR		KGAWF1306UFR		KGAWF1406UFR			KGAWF1506UFR

Electrical Data		040-10	060-10	060-14	080-16	080-20	100-14	100-20	120-20
Input Voltage	Volts-Hertz-Phase	115-60-1							
Operating Voltage Range	Min-Max	104-127							
Maximum Input Amps	Amps	6.8	7.0	8.4	9.6	14.5	7.6	14.6	14.9
Unit Ampacity	Amps	9.5	9.7	11.5	13.0	19.1	10.4	19.2	19.6
Minimum Wire Size	AWG	14	14	14	14	12	14	12	12
Maximum Wire Length @ Minimum Wire Size	Feet	39	38	32	28	30	35	29	29
	(M)	(11.9)	(11.6)	(9.8)	(8.5)	(9.1)	(10.7)	(8.8)	(8.8)
Maximum Fuse/Ckt Bkr (Time-Delay Type Recommended)	Amps	15	15	15	15	20	15	20	20
Transformer Capacity (24vac output)		40 VA							
External Control Power Available	Heating	27.9 VA							
	Cooling	34.6 VA							

Controls		040-10	060-10	060-14	080-16	080-20	100-14	100-20	120-20
Gas Connection Size		1/2" - NPT							
Burners (Monoport)		2	3	3	4	4	5	5	6
Gas Valve (Redundant)	Manufacturer	White Rogers							
Minimum Inlet Gas pressure (in. wc)		4.5							
Maximum Inlet Gas pressure (in. wc)		13.6							
Gas Conversion Kit - Natural to Propane		KGANP50011SP							
Gas Conversion Kit - Propane to Natural		KGAPN42011SP							
Manufactured (Mobile) Home Kit		KGAMH0601KIT							
Ignition Device		Silicon Nitride							
Limit Control		165	165	180	170	200	180	180	160
Heating Blower Control (Heating Off-Delay)		Adjustable: 90, 120, 150, 180 seconds							
Cooling Blower Control (Time Delay Relay)		90 seconds							
Communication System		*none*							
Thermostat Connections		Com 24V, R, W, G, Y							
Accessory Connections		EAC (115vac); HUM (24vac)							

MODEL NUMBER NOMENCLATURE

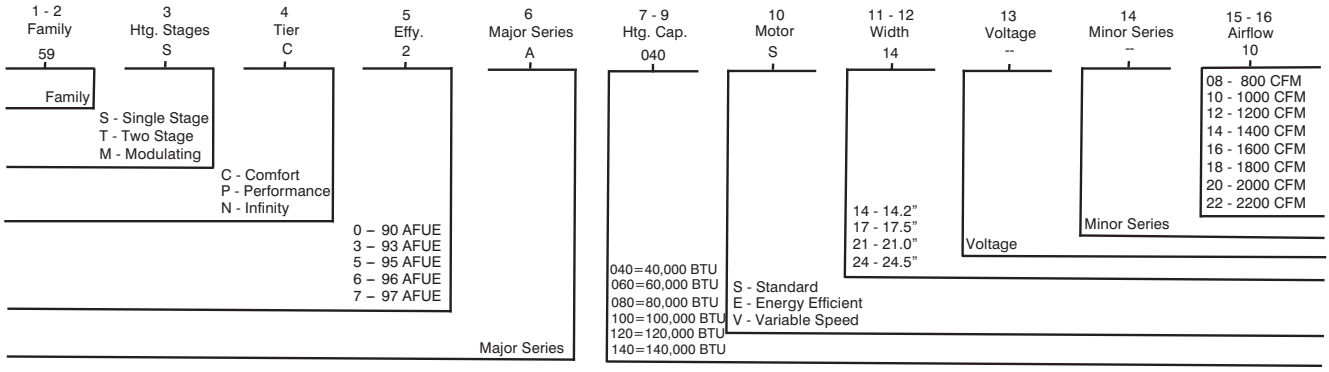

Not all familes have these models.

A12040

59SC2A

FURNACE COMPONENTS

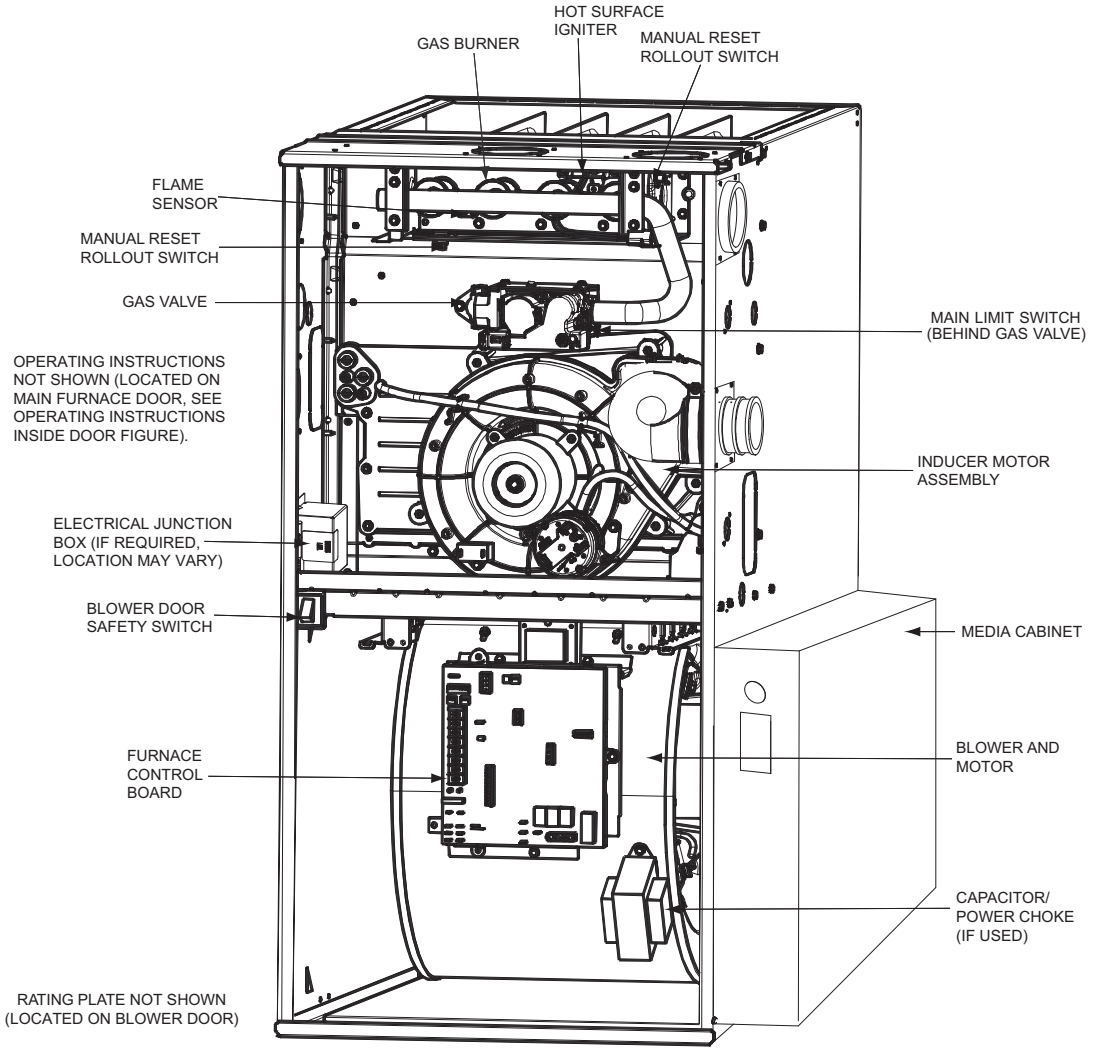

REPRESENTATIVE DRAWING ONLY, SOME MODELS MAY VARY IN APPEARANCE.

A11408

ACCESSORIES

Venting Accessories		Part Number	Used With	Notes
Vent Kit - Through the Cabinet		KGADC0101BVC	All	1
Vent Terminal - Concentric	2-in.	KGAVT0701CVT	See Venting Tables	1
	3-in.	KGAVT0801CVT	See Venting Tables	1
Vent Terminal Bracket	2-in.	KGAVT0101BRA	See Venting Tables	1, 2
	3-in.	KGAVT0201BRA	See Venting Tables	1, 2

Condensate Drainage Accessories	Part Number	Used With	Notes
Freeze Protect Kit - Heat Patch for Drain Trap	KGAHT0201CFP	All	7
Freeze Protect Kit - Heat Tape	KGAHT0101CFP	All	-
CPVC to PVC Drain Adapter - 1/2-in. CPVC to 3/4-in. PVC	KGAAD0110PVC	All	-
Horizontal Trap Grommet for Direct Vent Applications	KGACK0101HCK	All DV Horizontal	-
Condensate Neutralizer Kit	P908-0001	All	6

Ductwork Adapter Accessories		Part Number	Used With	Notes
Furnace Base Kit for Combustible Floors		KGASB0201ALL	All	-
Coil Adapters Kits - Painted	No Offset	KGADA0101ALL	All	-
	Single Offsett	KGADA0201ALL	All	-
	Double Offset	KGADA0301ALL	All	-
Return Air Base (Upflow applications) - Painted	14.2-in. wide	KGARP0301B14	14.2" Wide Furnaces	7
	17.5-in. wide	KGARP0301B17	17.5" Wide Furnaces	7
	21-in. wide	KGARP0301B21	21" Wide Furnaces	7
	24.5-in. wide	KGARP0301B24	24.5" Wide Furnaces	7
IAQ Device Duct Adapters (side return) - Painted	20-in IAQ to 16-in side return	KGAAD0101MEC	20"x25" IAQ Devices	7
	24-in IAQ to 16-in side return	KGAAD0201MEC	24"x25" IAQ Devices	7

Gas Conversion Accessories		Part Number	Used With	Notes
Mfg Home Kit - Single-stage		KGAMH0601KIT	All, except 140k	-
Gas Cnv Kit - Nat to LP; Single-stage		KGANP50011SP	All	-
Gas Cnv Kit - LP to Nat; Single-stage		KGAPN42011SP	All	-
Gas Orifice Kit	#42 Natural Gas	KGAHA0150N42	All	4, 6
	#43 Natural Gas	KGAHA0250N43	All	4, 6
	#44 Natural Gas	KGAHA0350N44	All	4
	#45 Natural Gas	KGAHA0450N45	All	4
	#46 Natural Gas	KGAHA0550N46	All	4
	#47 Natural Gas	KGAHA1550N47	All	4
	#48 Natural Gas	KGAHA1650N48	All	4
	#54 LP	KGAHA0650P54	All	4, 6
	#55 LP	KGAHA0750P55	All	4
	#56 LP	KGAHA0850P56	All	4, 6
	1.25 mm LP	KGAHA5750125	All	4, 6
	1.30 mm LP	KGAHA5750130	All	4, 6

Control Accessories	Part Number	Used With	Notes
Twinning Kit	KGATW0701HSI	060-14, 080-16, 080-20, 100-14, 100-20, 120-20	-
Comfort Zone: 3-Zone System (HP only)	ZONECC3ZHP01	All	-
Comfort Zone: 3-Zone System (AC only)	ZONECC3ZAC01	All	-
Programmable Thermostat (HP or AC) / (AC only)	TC-PHP01 / TC-PAC01	All	-
Non-Programmable Thermostat (HP or AC) / (AC only)	TC-NHP01 / TC-NAC01	All	-
Non-Programmable Standard Screen Thermostat (HP or AC) / (AC only)	TCSNHP01 / TCSNAC01	All	-
Programmable Thermostat (HP or AC) / (AC only)	TB-PHP01 / TB-PAC01	All	-
Non-Programmable Thermostat (HP or AC) / (AC only)	TB-NHP01 / TB-NAC01	All	-

IAQ Accessories		Part Number	Used With	Notes
Filter Rack - Side Return for 1" Filters	16 X 25	KGAFR0801SRE	All	5
Filter Rack - Bottom Return for 1" Filters	14.2-in. wide	KGBFR0401B14	14.2" Wide Furnaces	3, 5
	17.5-in. wide	KGBFR0501B17	17.5" Wide Furnaces	3, 5
	21-in. wide	KGBFR0601B21	21" Wide Furnaces	3, 5
	24.5-in. wide	KGAFR0701B24	24.5" Wide Furnaces	3, 5
Filter Pack (6 pack) - Washable	16 x 25 x 1	KGAWF1306UFR	All	5
	24 x 25 x 1	KGAWF1506UFR	All	5
EZ-Flex Filter	16-in.	EXPXXFIL0016	EZXCAB--1016	3, 5
	20-in.	EXPXXFIL0020	EZXCAB--1020	3, 5
	24-in.	EXPXXFIL0024	EZXCAB--1024	3, 5
EZ-Flex Filter with End Caps	16-in.	EXPXXUNV0016	EZXCAB--1016	3, 5
	20-in.	EXPXXUNV0020	EZXCAB--1020	3, 5
	24-in.	EXPXXUNV0024	EZXCAB--1024	3, 5
Cartridge Media Filter	16-in.	FILXXCAR0016	FILCABXL1016	3, 5
	20-in.	FILXXCAR0020	FILCABXL1020	3, 5
	24.in.	FILXXCAR0024	FILCABXL2024	3, 5
EZ Flex Cabinet - Side or Bottom Return for 4" Filters (Use FILCAB for 24" furnaces)	16-in.	EZXCABCC0016	All	5
	20-in.	EZXCABCC0020	All	5
	24-in.	FILCABXL0024	All	5

Notes:

1. CSA requires that a termination kit be used. See latest PD for pipe and kit size selection. The qualified installer or agency must use only factory-authorized kits when modifying these furnaces.
2. Not for use with Concentric Vent Termination Kits.
3. Last 2 digits of Part Number indicate filter size.
4. Last 2 digits of Part Number indicate orifice size.
5. Choose IAQ/filter assembly appropriate for the designed system airflow and static pressure. Use optional IAQ Device Duct Adapters as required.
6. Available from Replacement Components group.
7. Kit coming soon. Expected availability 2Q2012.

AIR DELIVERY - CFM (BOTTOM RETURN WITH FILTER)

UNIT SIZE	RETURN-AIR CONNECTION	SPEED TAPS [2]	EXTERNAL STATIC PRESSURE (IN.W.C.)									
			0.1	0.2	0.3	0.4	0.5	0.6	0.7	0.8	0.9	1.0
040–10	SIDE/BOTTOM	Black	1100	1055	1010	960	905	850	795	740	685	620
		Yellow	955	915	875	830	790	740	695	645	590	530
		Blue	820	795	765	730	695	655	615	570	515	460
		Red	730	710	680	655	625	595	555	515	465	400
060–10	SIDE/BOTTOM	Black	1340	1295	1245	1190	1130	1065	1005	895	815	725
		Yellow	1035	1010	980	945	910	865	795	730	665	605
		Blue	845	825	810	785	755	710	670	625	570	515
		Red [5]	770	750	730	710	675	640	600	560	510	455
060–14	SIDE/BOTTOM	Black	1665	1615	1550	1485	1420	1345	1270	1190	1105	985
		Yellow	1340	1320	1295	1260	1215	1165	1110	1045	925	850
		Orange	1050	1045	1035	1015	995	960	915	845	785	725
		Blue	985	980	975	950	930	900	845	795	740	690
		Red [5]	735	720	700	675	650	620	595	560	520	480
080–16	SIDE/BOTTOM	Black	1870	1810	1740	1670	1600	1525	1440	1355	1270	1180
		Yellow	1525	1495	1460	1415	1365	1305	1240	1170	1090	990
		Orange	1375	1355	1330	1300	1260	1210	1155	1090	1025	940
		Blue	1045	1040	1030	1010	985	960	920	875	825	745
		Red [5]	880	865	850	835	810	785	750	715	665	605
080–20	BOTTOM or TWO-SIDES [3,4]	Black	2390	2320	2230	2125	2025	1920	1825	1720	1600	1475
		Yellow	2010	1970	1925	1875	1805	1730	1655	1560	1460	1350
		Orange	1670	1660	1650	1620	1585	1550	1485	1410	1330	1225
		Blue	1500	1500	1495	1485	1460	1425	1380	1320	1255	1165
		Red	1270	1260	1255	1245	1225	1195	1160	1125	1065	1000
100–14	SIDE/BOTTOM	Black	1780	1735	1685	1625	1565	1495	1415	1325	1240	1145
		Blue	1605	1565	1520	1465	1410	1340	1265	1190	1110	1020
		Yellow	1345	1310	1270	1225	1175	1120	1060	995	920	835
		Orange [5]	1130	1090	1045	1000	945	895	840	775	715	635
		Red [5]	900	855	800	750	695	640	590	525	470	405
100–20	BOTTOM or TWO-SIDES [3,4]	Black	2510	2420	2330	2240	2145	2040	1920	1805	1675	1520
		Yellow	2030	2010	1970	1925	1870	1805	1725	1630	1525	1400
		Orange	1655	1660	1650	1635	1615	1575	1520	1450	1360	1270
		Blue	1520	1520	1520	1520	1500	1475	1430	1360	1290	1200
		Red	1265	1255	1250	1240	1225	1205	1175	1135	1085	1025
120–20	BOTTOM or TWO-SIDES [3,4]	Black	2470	2375	2280	2175	2065	1940	1820	1695	1580	1475
		Blue	2275	2210	2125	2045	1945	1835	1715	1605	1500	1395
		Yellow	1690	1685	1670	1640	1590	1525	1455	1385	1295	1210
		Orange [5]	1460	1465	1450	1430	1400	1355	1315	1255	1185	1105
		Red [5]	1310	1300	1290	1265	1245	1210	1165	1120	1060	985

NOTE:

1. A filter is required for each return–air inlet. Airflow performance includes a 3/4–in. (19 mm) washable filter media such as contained in a factory–authorized accessory filter rack. See accessory list. To determine airflow performance without this filter, assume an additional 0.1 in. w.c.. available external static pressure.
2. Blower speed taps are not always in the same order. Factory default blower connections are as follows:
   a. Heating airflow – BLUE (also used for Continuous Fan)
   b. Cooling airflow – BLACK (enabled when the Y terminal is energized)
   ADJUST THE BLOWER SPEED TAPS AS NECESSARY FOR THE PROPER AIR TEMPERATURE RISE FOR EACH INSTALLATION.
3. Airflows over 1800 CFM require bottom return, two–side return, or bottom and side return. A minimum filter size of 20” x 25” (508 x 635 mm) is required.
4. For upflow applications, air entering from one side into both the side of the furnace and a return air base counts as a side and bottom return.
5. Highlighted areas indicate that this airflow range is beyond the range allowed for heating. **THESE AIRFLOW RANGES MAY ONLY BE USED FOR COOLING.**

MAXIMUM EQUIVALENT VENT LENGTH - FT. (M)

Table 1 – Maximum Equivalent Vent Length - Ft. (M)
0 to 4500 Ft. (0 to 1370 M) Altitude

NOTE: Maximum Equivalent Vent Length (MEVL) includes standard and concentric vent termination and does NOT include elbows. Use Table 2 - Deductions from Maximum Equivalent Vent Length to determine allowable vent length for each application.

Altitude FT (M)	Unit Size BTU/Hr	DIRECT VENT (2-PIPE) AND NON-DIRECT VENT (1-PIPE)									
		Vent Pipe Diameter (in.) [1]									
		1-1/2		2		2-1/2		3		4	
0 to 2000 (0 to 610)	40,000 [3]	50	(15.2)	210	(64.0)	250	(76.2)	NA [2]		NA	
	60,000	30	(9.1)	135	(41.1)	235	(71.6)	265	(80.8)	NA	
	80,000	20	(6.1)	70	(21.3)	175	(53.3)	235	(71.6)	265	(80.8)
	100,000	NA		25	(7.6)	110	(33.5)	235	(71.6)	265	(80.8)
	120,000	NA		NA		15	(4.6)	100	(30.5)	250	(76.2)
	140,000 [4]	NA		NA		10	(3.0)	90	(27.4)	210	(64.0)
2001 to 3000 (610 to 914)	40,000	45	(13.7)	198	(60.4)	232	(70.7)	NA		NA	
	60,000	27	(8.2)	127	(38.7)	222	(67.7)	250	(76.2)	NA	
	80,000	17	(5.2)	64	(19.5)	165	(50.3)	222	(67.7)	249	(75.9)
	100,000	NA		22	(6.7)	104	(31.7)	223	(68.0)	250	(76.2)
	120,000	NA		NA		11	(3.4)	93	(28.3)	237	(72.2)
	140,000 [4]	NA		NA		NA		80	(24.4)	185	(56.4)
3001 to 4000 (914 to 1219)	40,000	39	(11.9)	184	(56.1)	214	(65.2)	NA		NA	
	60,000	23	(7.0)	119	(36.3)	210	(64.0)	235	(71.6)	NA	
	80,000	15	(4.6)	59	(18.0)	155	(47.2)	210	(64.0)	232	(70.7)
	100,000	NA		19	(5.8)	98	(29.9)	211	(64.3)	236	(71.9)
	120,000	NA		NA		8	(2.4)	86	(26.2)	224	(68.3)
	140,000 [4]	NA		NA		NA		79	(24.1)	158	(48.2)
4001 to 4500 (1219 to 1370)	40,000	36	(11.0)	177	(53.9)	205	(62.5)	NA		NA	
	60,000	21	(6.4)	115	(35.1)	204	(62.2)	228	(69.5)	NA	
	80,000	14	(4.3)	56	(17.1)	150	(45.7)	202	(61.6)	224	(68.3)
	100,000	NA		17	(5.2)	94	(28.7)	205	(62.5)	229	(69.8)
	120,000	NA		NA		NA		83	(25.3)	217	(66.1)
	140,000 [4]	NA		NA		NA		69	(21.0)	146	(44.5)

NOTES: See notes at end of venting tables.
See Table 3 for altitudes over 4500 ft. (1370 M)

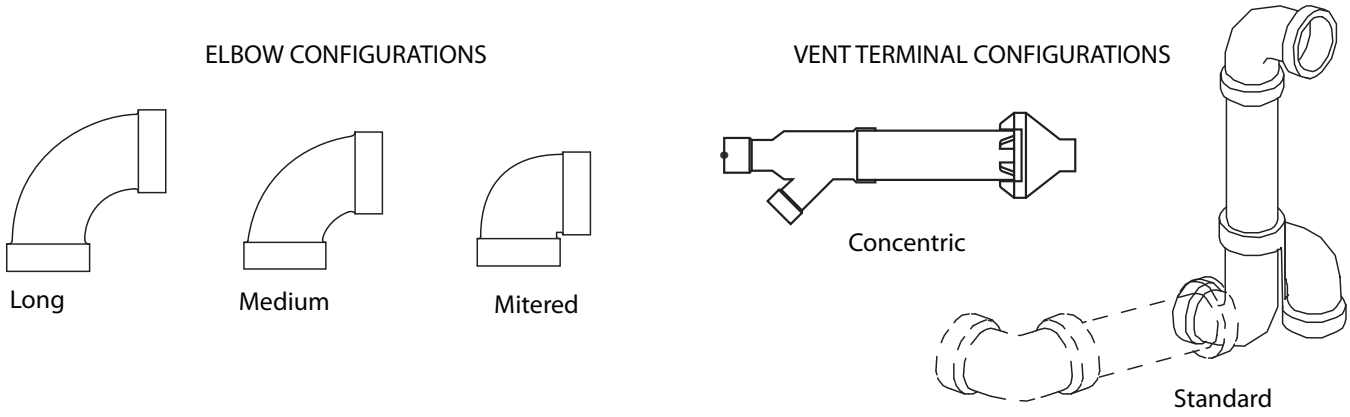

59SC2A

MAXIMUM EQUIVALENT VENT LENGTH - FT. (M) (CONTINUED)

Table 2 – Deductions from Maximum Equivalent Vent Length - Ft. (M)

Pipe Diameter (in):	1-1/2		2		2-1/2		3		4	
Mitered 90° Elbow	8	(2.4)	8	(2.4)	8	(2.4)	8	(2.4)	8	(2.4)
Medium Radius 90° Elbow	5	(1.5)	5	(1.5)	5	(1.5)	5	(1.5)	5	(1.5)
Long Radius 90° Elbow	3	(0.9)	3	(0.9)	3	(0.9)	3	(0.9)	3	(0.9)
Mitered 45° Elbow	4	(1.2)	4	(1.2)	4	(1.2)	4	(1.2)	4	(1.2)
Medium Radius 45° Elbow	2.5	(0.8)	2.5	(0.8)	2.5	(0.8)	2.5	(0.8)	2.5	(0.8)
Long Radius 45° Elbow	1.5	(0.5)	1.5	(0.5)	1.5	(0.5)	1.5	(0.5)	1.5	(0.5)
Tee	16	(4.9)	16	(4.9)	16	(4.9)	16	(4.9)	16	(4.9)
Concentric Vent Termination	NA		0	(0.0)	NA		0	(0.0)	NA	
Standard Vent Termination	0	(0.0)	0	(0.0)	0	(0.0)	0	(0.0)	0	(0.0)

Venting System Length Calculations

The maximum length for each vent pipe (inlet or exhaust) equals the Maximum Equivalent Vent Length (MEVL) from Table 1 or Table 3 minus the number of elbows multiplied by the deduction for each elbow in Table 2.

Standard vent terminations and concentric vent terminations count for zero deductions.

See Vent Manufacturers' data for equivalent lengths of flexible vent piping.

DO NOT ASSUME that one foot of flexible vent pipe is equivalent to one foot of standard PVC vent pipe.

Example

A direct-vent 60,000 Btuh furnace installed at 2100 ft. (640 M) with 2-in.(51 mm) vent piping. Venting system includes, **FOR EACH PIPE**, (3) 90° long radius elbows, (2) 45° long radius elbows and a concentric vent kit.

Maximum Equivalent Vent Length				=	127 ft.	(From Table 1)
Deduct (3) 90 long radius	3	x	3 ft.	=	- 9 ft.	(From Table 2)
Deduct (2) 45 long radius	2	x	1.5 ft.	=	- 3 ft.	(From Table 2)
No deduction for Concentric Vent Kit			0 ft.	=	- 0 ft.	(From Table 2)
Maximum Vent Length				=	115 ft.	For **EACH** vent or inlet pipe

MAXIMUM EQUIVALENT VENT LENGTH - FT. (M) (CONTINUED)

Table 3 – Maximum Equivalent Vent Length - Ft. (M)
4501 to 10,000 Ft. (0 to 1370 M) Altitude

NOTE: Maximum Equivalent Vent Length (MEVL) includes standard and concentric vent termination and does NOT include elbows. Use Table 2 - Deductions from Maximum Equivalent Vent Length to determine allowable vent length for each application.

Altitude FT (M) [5]	Unit Size	DIRECT VENT (2-PIPE) AND SINGLE-PIPE									
		Vent Pipe Diameter (in.) [1]									
		1-1/2		2		2-1/2		3		4	
4501 to 5000 (1370 to 1524)	40,000	33	(10.1)	171	(52.1)	196	(59.7)	NA [2]		NA	
	60,000	20	(6.1)	111	(33.8)	198	(60.4)	221	(67.4)	NA	
	80,000	13	(4.0)	54	(16.5)	146	(44.5)	195	(59.4)	216	(65.8)
	100,000	NA		16	(4.9)	91	(27.7)	200	(61.0)	222	(67.7)
	120,000	NA		NA		NA		80	(24.4)	211	(64.3)
	140,000 [4]	NA		NA		NA		60	(18.3)	134	(40.8)
5001 to 6000 (1524 to 1829)	40,000	27	(8.2)	158	(48.2)	179	(54.6)	NA		NA	
	60,000	16	(4.9)	103	(31.4)	186	(56.7)	207	(63.1)	NA	
	80,000	11	(3.4)	49	(14.9)	137	(41.8)	183	(55.8)	200	(61.0)
	100,000	NA		12	(3.7)	85	(25.9)	188	(57.3)	208	(63.4)
	120,000	NA		NA		NA		74	(22.6)	199	(60.7)
	140,000 [4]	NA		NA		NA		50	(15.2)	109	(33.2)
6001 to 7000 (1829 to 2134)	40,000	21	(6.4)	145	(44.2)	162	(49.4)	NA		NA	
	60,000	13	(4.0)	96	(29.3)	174	(53.0)	194	(59.1)	NA	
	80,000	NA		44	(13.4)	120	(36.6)	171	(52.1)	185	(56.4)
	100,000	NA		10	(3.0)	79	(24.1)	178	(54.3)	195	(59.4)
	120,000	NA		NA		NA		68	(20.7)	187	(57.0)
	140,000 [4]	NA		NA		NA		41	(12.5)	87	(26.5)
7001 to 8000 (2134 to 2438)	40,000	15	(4.6)	133	(40.5)	146	(44.5)	NA		NA	
	60,000	10	(3.0)	89	(27.1)	163	(49.7)	181	(55.2)	NA	
	80,000	NA		40	(12.2)	120	(36.6)	159	(48.5)	170	(51.8)
	100,000	NA		NA		73	(22.3)	167	(50.9)	182	(55.5)
	120,000	NA		NA		NA		62	(18.9)	175	(53.3)
	140,000 [4]	NA		NA		NA		32	(9.8)	63	(19.2)
8001 to 9000 (2438 to 2743)	40,000	10	(3.0)	121	(36.9)	130	(39.6)	NA		NA	
	60,000	7	(2.1)	82	(25.0)	152	(46.3)	168	(51.2)	NA	
	80,000	NA		35	(10.7)	111	(33.8)	148	(45.1)	156	(47.5)
	100,000	NA		NA		67	(20.4)	157	(47.9)	170	(51.8)
	120,000	NA		NA		NA		56	(17.1)	164	(50.0)
	140,000 [4]	NA		NA		NA		23	(7.0)	42	(12.8)
9001 to 10,000 (2743 to 3048)	40,000	5	(1.5)	110	(33.5)	115	(35.1)	NA		NA	
	60,000	NA		76	(23.2)	142	(43.3)	156	(47.5)	NA	
	80,000	NA		31	(9.4)	103	(31.4)	137	(41.8)	142	(43.3)
	100,000	NA		NA		62	(18.9)	147	(44.8)	157	(47.9)
	120,000	NA		NA		NA		51	(15.5)	153	(46.6)
	140,000 [4]	NA		NA		NA		16	(4.9)	20	(6.1)

NOTES:
1. Use only the vent pipe sizes shown for each furnace. It is NOT necessary to choose the smallest diameter pipe possible for venting.
2. NA – Not allowed. Pressure switch will not close, or flame disturbance may result.
3. Total equivalent vent lengths under 10' for 40,000 BTUH furnaces from 0 to 2000 ft. (0 to 610 M) above sea level require use of an outlet choke plate . **Failure to use an outlet choke when required may result in flame disturbance or flame sense lockout.**
4. Not all furnace families include 140,000 BTUH input models.
5. Vent sizing for Canadian installations over 4500 ft (1370 M) above sea level are subject to acceptance by local authorities having jurisdiction.
6. Size both the combustion air and vent pipe independently, then use the larger size for both pipes.
7. Assume the two 45° elbows equal one 90° elbow. Wide radius elbows are desirable and may be required in some cases.
8. Elbow and pipe sections within the furnace casing and at the vent termination should not be included in vent length or elbow count.
9. The minimum pipe length is 5 ft. (1.5 M) linear feet (meters) for all applications.
10. Use 3–in. (76 mm) diameter vent termination kit for installations requiring 4–in. (102 mm) diameter pipe.

MAXIMUM ALLOWABLE EXPOSED VENT LENGTHS INSULATION TABLE - FT. (M)

Maximum Length of Uninsulated and Insulated Vent Pipe-Ft (M)																	
Single Stage Furnace Input	Winter Design Temp ° F (° C)	Pipe Length in Ft. & M	No Insulation					3/8-in. (9.5 mm) Insulation					1/2-in. (12.7 mm) Insulation				
			Pipe Diameter-inches (mm)					Pipe Diameter-inches (mm)					Pipe Diameter-inches (mm)				
			1 1/2	2	2 1/2	3	4	1 1/2	2	2 1/2	3	4	1 1/2	2	2 1/2	3	4
			(38)	(51)	(64)	(76)	(102)	(38)	(51)	(64)	(76)	(102)	(38)	(51)	(64)	(76)	(102)
40000	20 (-10)	Ft.	48	42	42	N/A	N/A	50	122	111	N/A	N/A	50	144	130	N/A	N/A
		M	14.6	12.8	12.8	N/A	N/A	15.2	37.2	33.8	N/A	N/A	15.2	43.9	39.6	N/A	N/A
	0 (-20)	Ft.	25	19	17	N/A	N/A	50	75	66	N/A	N/A	50	90	79	N/A	N/A
		M	7.6	5.8	5.2	N/A	N/A	15.2	22.9	20.1	N/A	N/A	15.2	27.4	24.1	N/A	N/A
	-20 (-30)	Ft.	14	7	5	N/A	N/A	50	52	45	N/A	N/A	50	64	55	N/A	N/A
		M	4.3	2.1	1.5	N/A	N/A	15.2	15.8	13.7	N/A	N/A	15.2	19.5	16.8	N/A	N/A
	-40 (-40)	Ft.	7	0	0	N/A	N/A	50	38	31	N/A	N/A	50	48	40	N/A	N/A
		M	2.1	0.0	0.0	N/A	N/A	15.2	11.6	9.4	N/A	N/A	15.2	14.6	12.2	N/A	N/A
60000	20 (-10)	Ft.	30	61	61	54	N/A	30	135	163	142	N/A	30	135	191	166	N/A
		M	9.1	18.6	18.6	16.5	N/A	9.1	41.1	49.7	43.3	N/A	9.1	41.1	58.2	50.6	N/A
	0 (-20)	Ft.	30	31	30	23	N/A	30	113	100	85	N/A	30	135	120	101	N/A
		M	9.1	9.4	9.1	7.0	N/A	9.1	34.4	30.5	25.9	N/A	9.1	41.1	36.6	30.8	N/A
	-20 (-30)	Ft.	24	17	15	7	N/A	30	81	70	57	N/A	30	98	85	70	N/A
		M	7.3	5.2	4.6	2.1	N/A	9.1	24.7	21.3	17.4	N/A	9.1	29.9	25.9	21.3	N/A
	-40 (-40)	Ft.	15	8	5	0	N/A	30	61	52	40	N/A	30	75	64	51	N/A
		M	4.6	2.4	1.5	0.0	N/A	9.1	18.6	15.8	12.2	N/A	9.1	22.9	19.5	15.5	N/A
80000	20 (-10)	Ft.	20	70	78	70	60	20	70	175	183	154	20	70	175	215	181
		M	6.1	21.3	23.8	21.3	18.3	6.1	21.3	53.3	55.8	46.9	6.1	21.3	53.3	65.5	55.2
	0 (-20)	Ft.	20	42	41	33	21	20	70	132	111	89	20	70	157	133	107
		M	6.1	12.8	12.5	10.1	6.4	6.1	21.3	40.2	33.8	27.1	6.1	21.3	47.9	40.5	32.6
	-20 (-30)	Ft.	20	25	23	14	1	20	70	94	77	57	20	70	113	94	71
		M	6.1	7.6	7.0	4.3	0.3	6.1	21.3	28.7	23.5	17.4	6.1	21.3	34.4	28.7	21.6
	-40 (-40)	Ft.	20	14	12	3	0	20	70	71	56	38	20	70	86	70	50
		M	6.1	4.3	3.7	0.9	0.0	6.1	21.3	21.6	17.1	11.6	6.1	21.3	26.2	21.3	15.2
100000	20 (-10)	Ft.	N/A	25	99	89	78	N/A	25	110	233	265	N/A	25	110	235	229
		M	N/A	7.6	30.2	27.1	23.8	N/A	7.6	33.5	71.0	80.8	N/A	7.6	33.5	71.6	69.8
	0 (-20)	Ft.	N/A	25	55	46	33	N/A	25	110	145	117	N/A	25	110	173	140
		M	N/A	7.6	16.8	14.0	10.1	N/A	7.6	33.5	44.2	35.7	N/A	7.6	33.5	52.7	42.7
	-20 (-30)	Ft.	N/A	25	34	24	11	N/A	25	110	103	79	N/A	25	110	124	97
		M	N/A	7.6	10.4	7.3	3.4	N/A	7.6	33.5	31.4	24.1	N/A	7.6	33.5	37.8	29.6
	-40 (-40)	Ft.	N/A	23	20	11	0	N/A	25	95	77	55	N/A	25	110	94	70
		M	N/A	7.0	6.1	3.4	0.0	N/A	7.6	29.0	23.5	16.8	N/A	7.6	33.5	28.7	21.3
120000	20 (-10)	Ft.	N/A	N/A	15	99	86	N/A	N/A	15	100	219	N/A	N/A	15	100	250
		M	N/A	N/A	4.6	30.2	26.2	N/A	N/A	4.6	30.5	66.8	N/A	N/A	4.6	30.5	76.2
	0 (-20)	Ft.	N/A	N/A	15	51	38	N/A	N/A	15	100	130	N/A	N/A	15	100	156
		M	N/A	N/A	4.6	15.5	11.6	N/A	N/A	4.6	30.5	39.6	N/A	N/A	4.6	30.5	47.5
	-20 (-30)	Ft.	N/A	N/A	15	28	14	N/A	N/A	15	100	88	N/A	N/A	15	100	108
		M	N/A	N/A	4.6	8.5	4.3	N/A	N/A	4.6	30.5	26.8	N/A	N/A	4.6	30.5	32.9
	-40 (-40)	Ft.	N/A	N/A	15	14	0	N/A	N/A	15	85	62	N/A	N/A	15	100	79
		M	N/A	N/A	4.6	4.3	0.0	N/A	N/A	4.6	25.9	18.9	N/A	N/A	4.6	30.5	24.1
140000	20 (-10)	Ft.	N/A	N/A	10	90	99	N/A	N/A	10	90	210	N/A	N/A	10	90	210
		M	N/A	N/A	3.0	27.4	30.2	N/A	N/A	3.0	27.4	64.0	N/A	N/A	3.0	27.4	64.0
	0 (-20)	Ft.	N/A	N/A	10	61	47	N/A	N/A	10	90	153	N/A	N/A	10	90	183
		M	N/A	N/A	3.0	18.6	14.3	N/A	N/A	3.0	27.4	46.6	N/A	N/A	3.0	27.4	55.8
	-20 (-30)	Ft.	N/A	N/A	10	35	21	N/A	N/A	10	90	104	N/A	N/A	10	90	128
		M	N/A	N/A	3.0	10.7	6.4	N/A	N/A	3.0	27.4	31.7	N/A	N/A	3.0	27.4	39.0
	-40 (-40)	Ft.	N/A	N/A	10	20	NA	N/A	N/A	10	90	75	N/A	N/A	10	90	94
		M	N/A	N/A	3.0	6.1	NA	N/A	N/A	3.0	27.4	22.9	N/A	N/A	3.0	27.4	28.7

*Not all families have these models.

RETURN AIR TEMPERATURE

This furnace is designed for continuous return-air minimum temperature of 60°F (15°C) db or intermittent operation down to 55°F (13°C) db such as when used with a night setback thermometer. Return-air temperature must not exceed 80°F (27°C) db. Failure to follow these return air limits may affect reliability of heat exchangers, motors and controls.

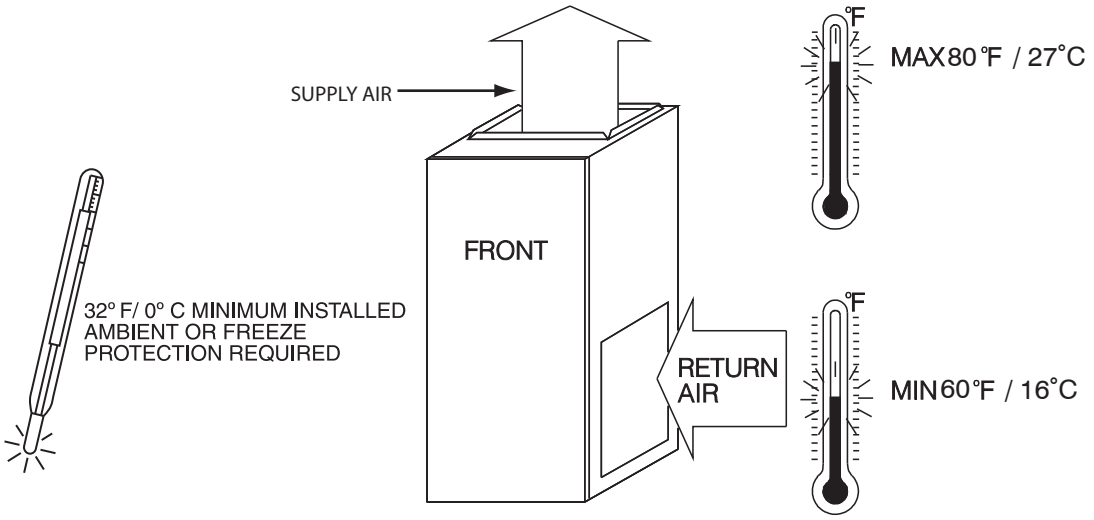

A10490

MINIMUM CLEARANCES TO COMBUSTIBLE MATERIALS

POSITION	CLEARANCE
Rear	0 (0 mm)
Front (Combustion air openings in furnace and in structure)	1 in. (25 mm)
Required for service	*24 in. (610 mm)
All Sides of Supply Plenum	1 in. (25 mm)
Sides	0 (0 mm)
Vent	0 (0 mm)
Top of Furnace	1 in. (25 mm)

* Recommended

COMBUSTION-AIR PIPE FOR NON-DIRECT (1-PIPE) VENT APPLICATION

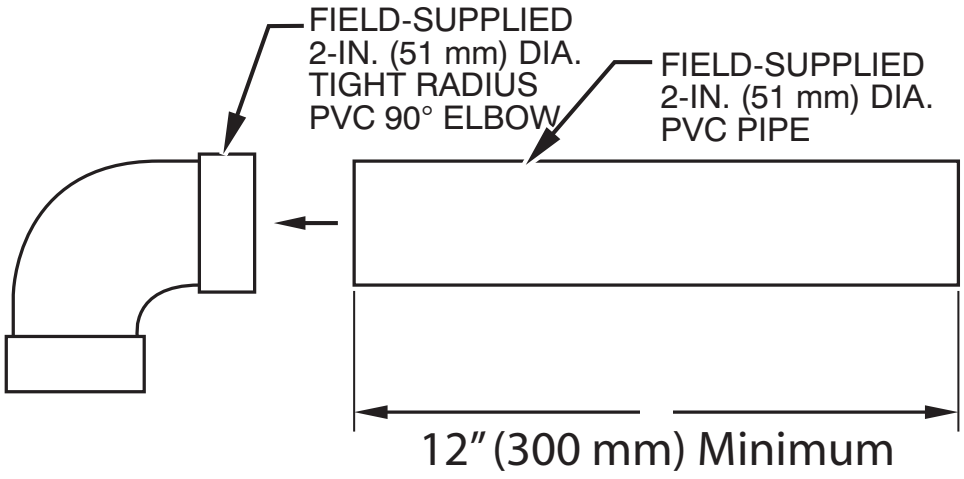

A11487

59SC2A

DOWNFLOW SUBBASE

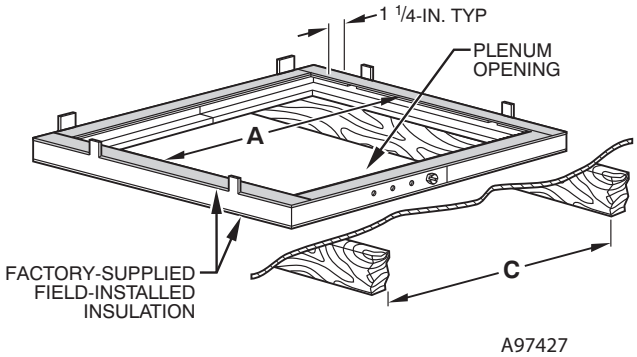

Assembled

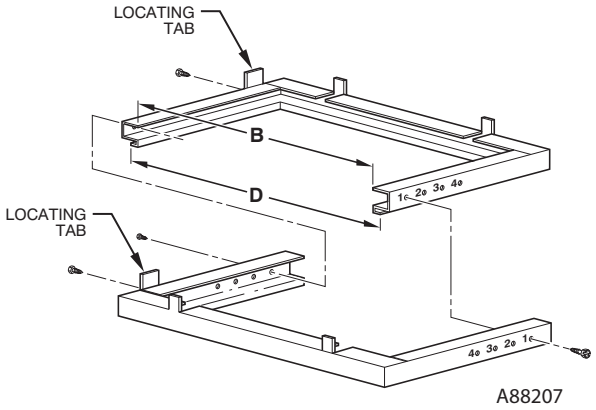

Disassembled

59SC2A

DIMENSIONS (IN. / MM)						
FURNACE CASING WIDTH	FURNACE IN DOWNFLOW APPLICATION	PLENUM OPENING*		FLOOR OPENING		HOLE NO. FOR WIDTH ADJUSTMENT
		A	B	C	D	
17–1/2 (444.5)	Furnace with or without Cased Coil Assembly or Coil Box	15–1/8 (384.2)	19 (482.6)	16–3/4 (425.5)	20–3/8 (517.5)	3
21 (533.4)	Furnace with or without Cased Coil Assembly or Coil Box	18–5/8 (396.4)	19 (482.6)	20–1/4 (514.4)	20–3/8 (517.5)	2
24–1/2 (622.3)	Furnace with or without Cased Coil Assembly or Coil Box	22–1/8 (562.0)	19 (482.6)	23–3/4 (603.3)	20–3/8 (517.5)	1

*The plenum should be constructed 1/4–in. (6 mm) smaller in width and depth than the plenum dimensions shown above.

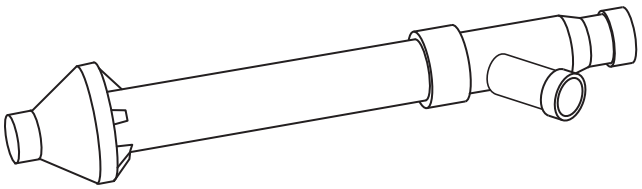

Concentric Vent Kit

A93086

A concentric vent kit allows vent and combustion-air pipes to terminate through a single exit in a roof or side wall. One pipe runs inside the other allowing venting through the inner pipe and combustion air to be drawn in through the outer pipe.

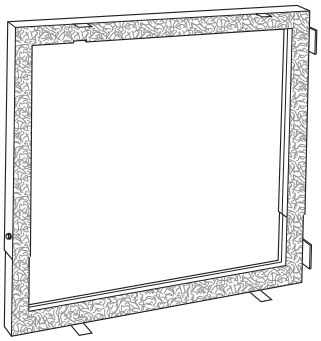

Downflow Subbase

A88202

One base fits all furnace sizes. The base is designed to be installed between the furnace and a combustible floor when no coil box is used or when a coil box other than a Carrier cased coil is used. It is CSA design certified for use with Carrier branded furnaces when installed in downflow applications.

MEDIA FILTER CABINET

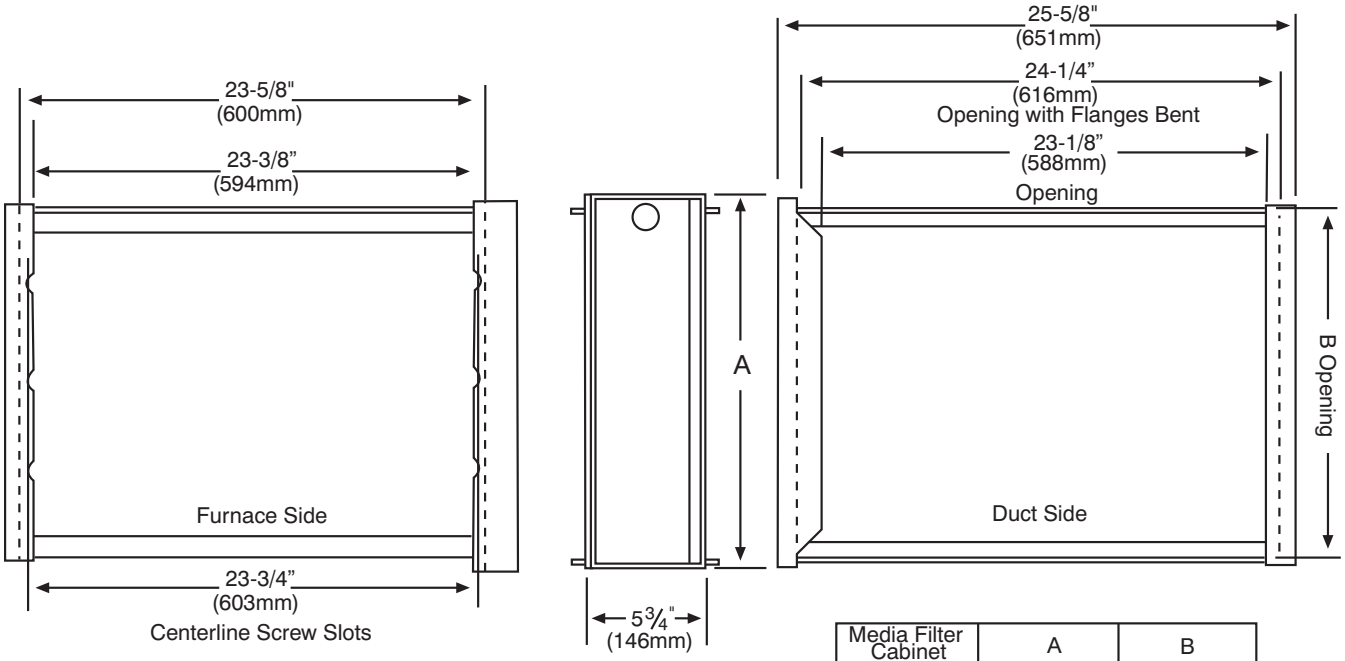

Media Filter Cabinet	A	B
16" (406mm)	17" (432mm)	16" (406mm)
20" (508mm)	21" (533mm)	20" (508mm)
24" (610mm)	25" (635mm)	24" (610mm)

A11456

59SC2A

TYPICAL WIRING SCHEMATIC

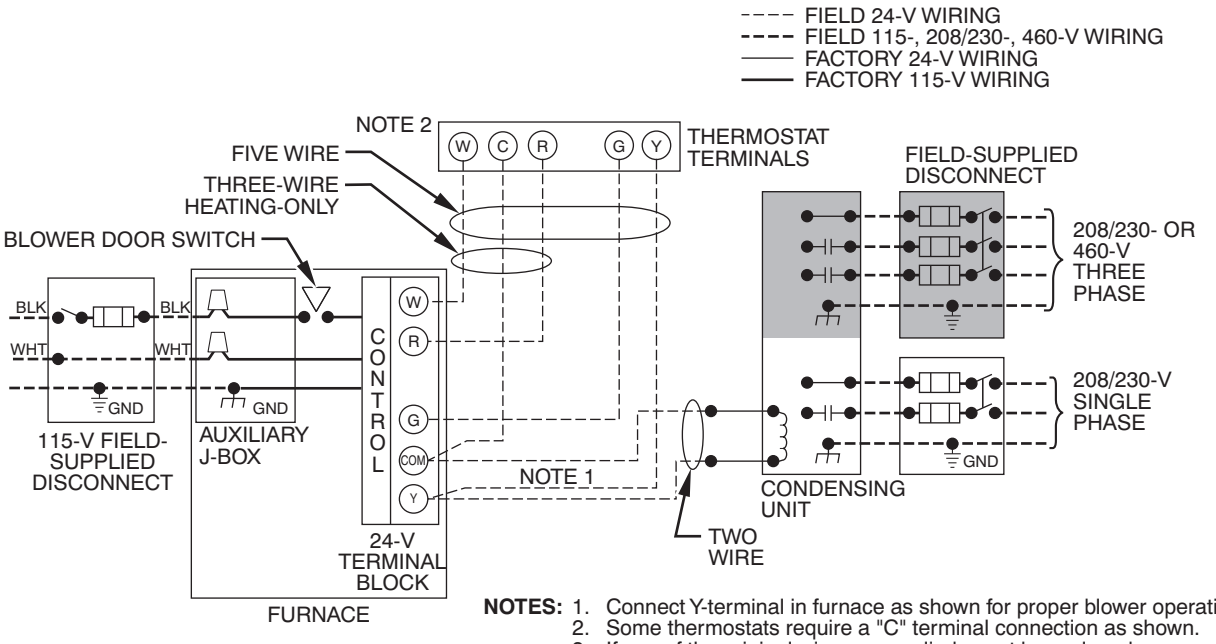

NOTES:
1. Connect Y-terminal in furnace as shown for proper blower operation.
2. Some thermostats require a "C" terminal connection as shown.
3. If any of the original wire, as supplied, must be replaced, use same type or equivalent wire.

A11387

DIMENSIONAL DRAWING

FURNACE SIZE (MODELS)	A (CABINET WIDTH)		B (OUTLET WIDTH)		C (BOTTOM INLET WIDTH)		D		SHIPPING WEIGHT	
(59SC2)	inches	mm	inches	mm	inches	mm	inches	mm	LBS	KG
040-10	14 3/16	361	12 1/2	319	12 9/16	322	7 1/8	181	123.0	55.4
060-10									127.0	57.2
060-14	17 1/2	445	15 7/8	403	16	406	8 3/4	222	144.0	64.8
080-16									154.0	69.3
080-20	21	533	19 3/8	492	19 1/2	495	10 1/2	267	161.5	72.7
100-14									168.5	75.8
100-20									168.5	75.8
120-20	24 1/2	622	22 7/8	581	23	584	12 1/4	311	186.0	83.7

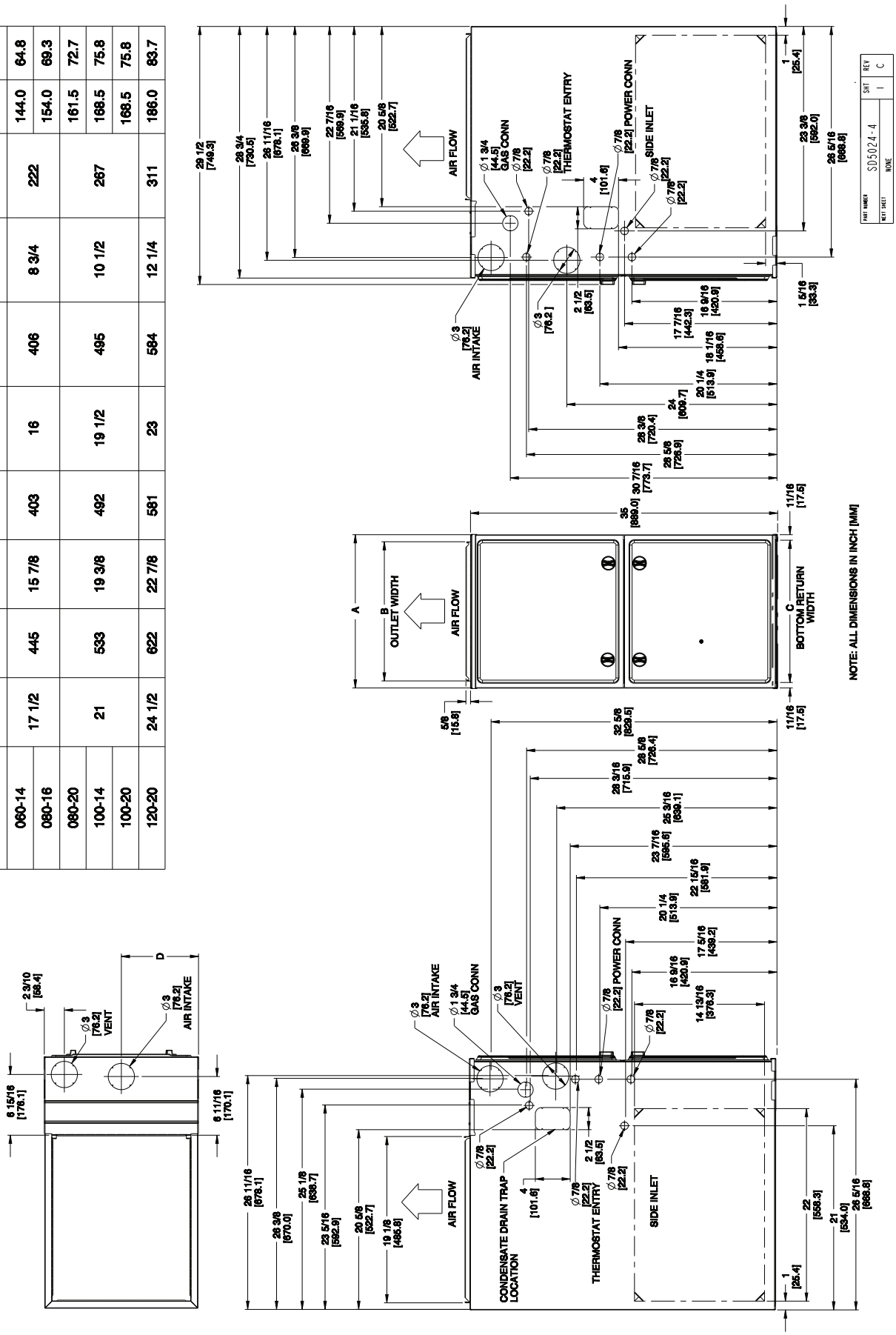

A11593

GUIDE SPECIFICATIONS

General

System Description

Furnish a _____ 4-way multipoise gas-fired condensing furnace for use with natural gas or propane (factory-authorized conversion kit required for propane); furnish cold air return plenum; furnish external media cabinet for use with accessory media filter or standard filter.

Quality Assurance

Unit will be designed, tested and constructed to the current ANSI Z 21.47/CSA 2.3 design standard for gas-fired central furnaces.

Unit will be third party certified by CSA to the current ANSI Z 21.47/CSA 2.3 design standard for gas-fired central furnaces. Unit will carry the CSA Blue Star® and Blue Flame® labels. Unit efficiency testing will be performed per the current DOE test procedure as listed in the Federal Register.

Unit will be certified for capacity and efficiency and listed in the latest AHRI Consumer's Directory of Certified Efficiency Ratings.

Unit will carry the current Federal Trade Commission Energy Guide efficiency label.

Delivery, Storage, and Handling

Unit will be shipped as single package only and is stored and handled per unit manufacturer's recommendations.

Warranty (for inclusion by specifying engineer)

U.S. and Canada only. Warranty certificate available upon request.

Equipment

Blower Wheel and PSC Blower Motor

Galvanized blower wheel shall be centrifugal type, statically and dynamically balanced. Blower motor of PSC type shall be permanently lubricated with sleeve bearings, of _____hp, and have multiple speeds from 500-1150 RPM operating only when 115-VAC motor inputs are provided. Blower motor shall be direct drive and soft mounted to the blower scroll to reduce vibration transmission.

Filters

Furnace shall have reusable-type filters. Filter shall be _____ in. (mm) X _____ in. (mm). An accessory highly efficient Media Filter is available as an option. _____ Media Filter.

Casing

Casing shall be of .030 in. thickness minimum, pre-painted galvanized steel.

Draft Inducer Motor

Draft inducer motor shall be single-speed design.

Primary Heat Exchangers

Primary heat exchangers shall be 3-Pass corrosion-resistant aluminized steel of fold-and-crimp sectional design and applied operating under negative pressure.

Secondary Heat Exchangers

Secondary heat exchangers shall be of a stainless steel flow-through of fin-and-tube design and applied operating under negative pressure.

Controls

Controls shall include a micro-processor-based integrated electronic control board with at least 16 service troubleshooting codes displayed via diagnostic flashing LED light on the control, a self-test feature that checks all major functions of the furnace, and a replaceable automotive-type circuit protection fuse. Multiple operational settings available, including blower speeds for heating, cooling, and continuous fan.

Operating Characteristics

Heating capacity shall be _____ Btuh input; _____ Btuh output capacity.

Fuel Gas Efficiency shall be _____AFUE.

Air delivery shall be _____ cfm minimum at 0.50 in. W.C. external static pressure.

Dimensions shall be: depth_____in. (mm); width _____in. (mm); height_____in. (mm) (casing only). Height shall be_____in. (mm) with A/C coil and _____in. (mm) overall with plenum.

Electrical Requirements

Electrical supply shall be 115 volts, 60 Hz, single-phase (nominal). Minimum wire size shall be _____AWG; maximum fuse size of HACR-type designated circuit breaker shall be _____ amps.

Special Features

Refer to section of the product data identifying accessories and descriptions for specific features and available enhancements.

Copyright 2012 Carrier Corp. • 7310 W. Morris St. • Indianapolis, IN 46231 Printed in U.S.A. Edition Date: 01/12 **Catalog No: 59SC2A−01PD**

Manufacturer reserves the right to change, at any time, specifications and designs without notice and without obligations. Replaces: New