619RF
Floor Console Ductless System
Sizes 09 to 12

bryant®

Installation Instructions

NOTE: Read the entire instruction manual before starting the installation.

TABLE OF CONTENTS

	PAGE
SAFETY CONSIDERATIONS	2
PARTS LIST	3
SYSTEM REQUIREMENTS	4
DIMENSIONS	5
CLEARANCES	5
INSTALLATION LOCATION REQUIREMENTS	6
INDOOR UNIT INSTALLATION	6
ELECTRICAL DATA	9
CONNECTION DIAGRAMS	9
WIRELESS REMOTE CONTROL INSTALLATION	9
WIRED REMOTE CONTROL INSTALLATION	9
START–UP	10
TROUBLESHOOTING	11

SAFETY CONSIDERATIONS

Installing, starting up, and servicing air−conditioning equipment can be hazardous due to system pressures, electrical components, and equipment location (roofs, elevated structures, etc.).

Only trained, qualified installers and service mechanics should install, start−up, and service this equipment.

Untrained personnel can perform basic maintenance functions such as cleaning coils. All other operations should be performed by trained service personnel.

When working on the equipment, observe precautions in the literature and on tags, stickers, and labels attached to the equipment.

Follow all safety codes. Wear safety glasses and work gloves. Keep quenching cloth and fire extinguisher nearby when brazing. Use care in handling, rigging, and setting bulky equipment.

Read these instructions thoroughly and follow all warnings or cautions included in literature and attached to the unit. Consult local building codes and National Electrical Code (NEC) for special requirements.

Recognize safety information. This is the safety−alert symbol ⚠. When you see this symbol on the unit and in instructions or manuals, be alert to the potential for personal injury. Understand these signal words: DANGER, WARNING, and CAUTION.

These words are used with the safety−alert symbol. DANGER identifies the most serious hazards which **will** result in severe personal injury or death. WARNING signifies hazards which **could** result in personal injury or death. CAUTION is used to identify unsafe practices which **may** result in minor personal injury or product and property damage. NOTE is used to highlight suggestions which **will** result in enhanced installation, reliability, or operation.

⚠ WARNING

ELECTRICAL SHOCK HAZARD

Failure to follow this warning could result in personal injury or death.

Before installing, modifying, or servicing system, main electrical disconnect switch must be in the OFF position. There may be more than 1 disconnect switch. Lock out and tag switch with a suitable warning label.

⚠ WARNING

EXPLOSION HAZARD

Failure to follow this warning could result in death, serious personal injury, and/or property damage.

Never use air or gases containing oxygen for leak testing or operating refrigerant compressors. Pressurized mixtures of air or gases containing oxygen can lead to an explosion.

⚠ CAUTION

EQUIPMENT DAMAGE HAZARD

Failure to follow this caution may result in equipment damage or improper operation.

Do not bury more than 36 in. (914 mm) of refrigerant pipe in the ground. If any section of pipe is buried, there must be a 6 in. (152 mm) vertical rise to the valve connections on the outdoor units. If more than the recommended length is buried, refrigerant may migrate to the cooler buried section during extended periods of system shutdown. This causes refrigerant slugging and could possibly damage the compressor at start−up.

PARTS LIST

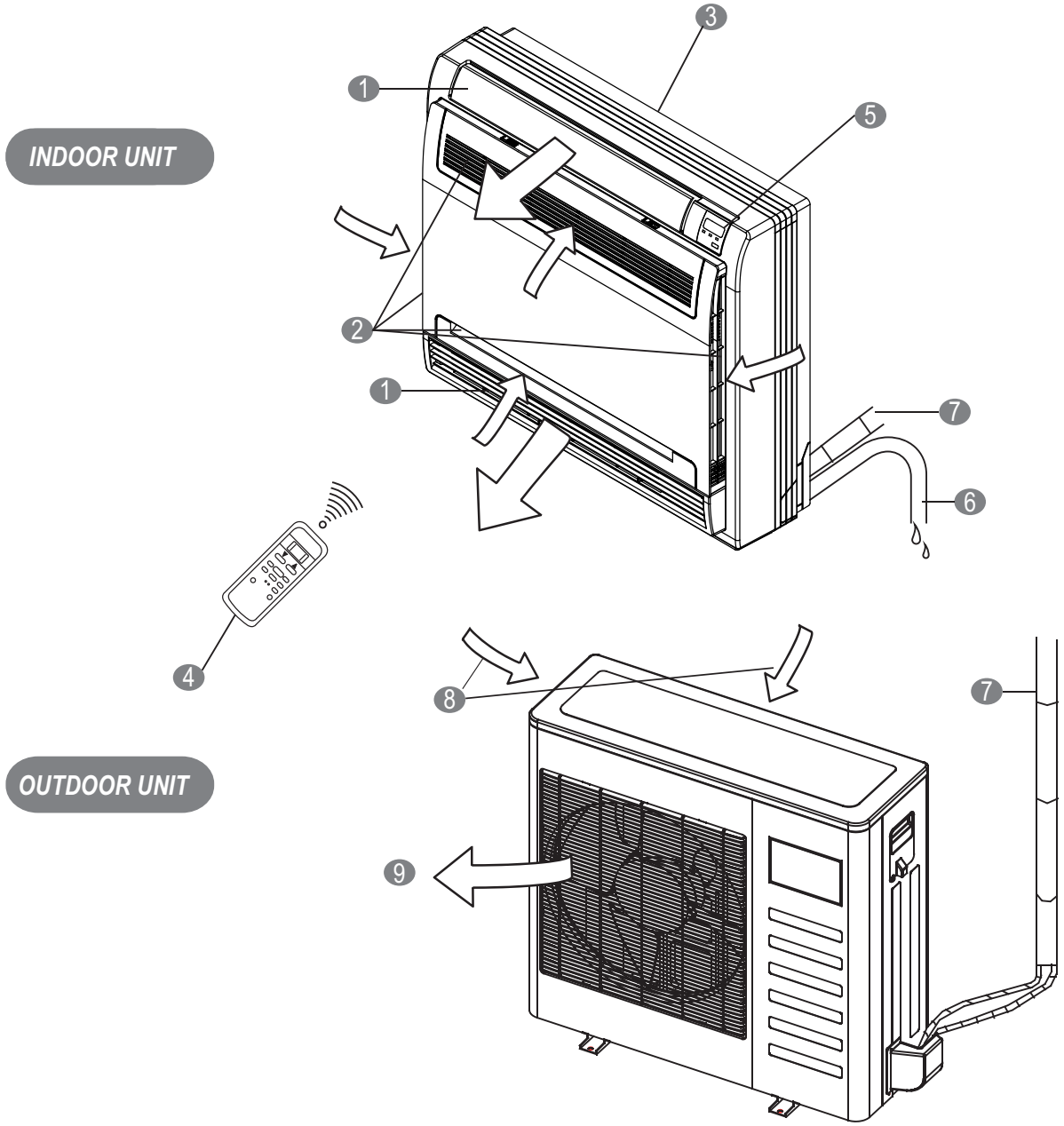

INDOOR UNIT

1. Air flow louver (at air outlet)
2. Air inlet (with air filter inside)
3. Installation section
4. Remote controller
5. Display panel
6. Drain pipe

OUTDOOR UNIT

7. Connecting pipe
8. Air inlet
9. Air outlet

A150654

Fig. 1 — Parts List

Note:
- If the outdoor unit is higher than the indoor unit, prevent rain from flowing into the indoor unit along the connection pipe by creating a downward arc in the connection pipe before it enters the wall to the indoor unit. This ensures that rain drips from the connection pipe before entering the wall.
- Piping and the interconnecting wiring are field supplied.
- The parts list (Fig.1) is a sketch. Different models may be slightly different.

SYSTEM REQUIREMENTS

Allow sufficient space for airflow and servicing unit.

Piping

IMPORTANT: **Both refrigerant lines must be insulated separately.**

- Minimum refrigerant line length between the indoor and outdoor units is 10 ft. (3 m).
- Table 2 lists the pipe sizes for the indoor unit. Refer to the outdoor unit installation instructions for other allowed piping lengths and refrigerant information.

Table 1—Indoor Unit Pipe Sizes

		9K	12K
Gas Pipe	in(mm)	3/8 (9.52)	1/2 (12.7)
Liquid Pipe	in(mm)	1/4 (6.35)	1/4 (6.35)

All wires must be sized per NEC (National Electrical Code) or CEC (Canadian Electrical Code) and local codes. Use the Electrical Data table MCA (minimum circuit amps) and MOCP (maximum over current protection) to correctly size the wires and the disconnect fuse or breakers respectively.

Per the caution note, only stranded copper conductors with a 600 volt rating and a double insulated copper wire must be used.

IMPORTANT: The use of BX cable is not recommended.

Recommended Connection Method for Power and Communication Wiring – Power and Communication Wiring:
The main power is supplied to the outdoor unit. The field supplied 14/3 power/communication wiring from the outdoor unit to the indoor unit consists of four (4) wires and provides the power for the indoor unit. Two wires are high voltage AC power. One wire is for communication wiring and the other is a ground wire.

Recommended Connection Method for Power and Communication Wiring (To minimize communication wiring interference)

Power Wiring:
The main power is supplied to the outdoor unit. The field supplied connecting cable from the outdoor unit to the indoor unit consists of three (3) wires and provides the power for the indoor unit. Two wires are high voltage AC power and one is a ground wire.

Communication Wiring:
A separate stranded copper conductor only, with a 600 volt rating and a double insulated copper wire must be used as the communication wire from the outdoor unit to the indoor unit. Please use a separate shielded 16GA stranded control wire.

⚠ CAUTION

EQUIPMENT DAMAGE HAZARD

Failure to follow this caution may result in equipment damage or improper operation.

- Wires should be sized based on NEC and local codes.
- Use copper conductors only with a 600 volt rating and double insulated copper wire.

DIMENSIONS

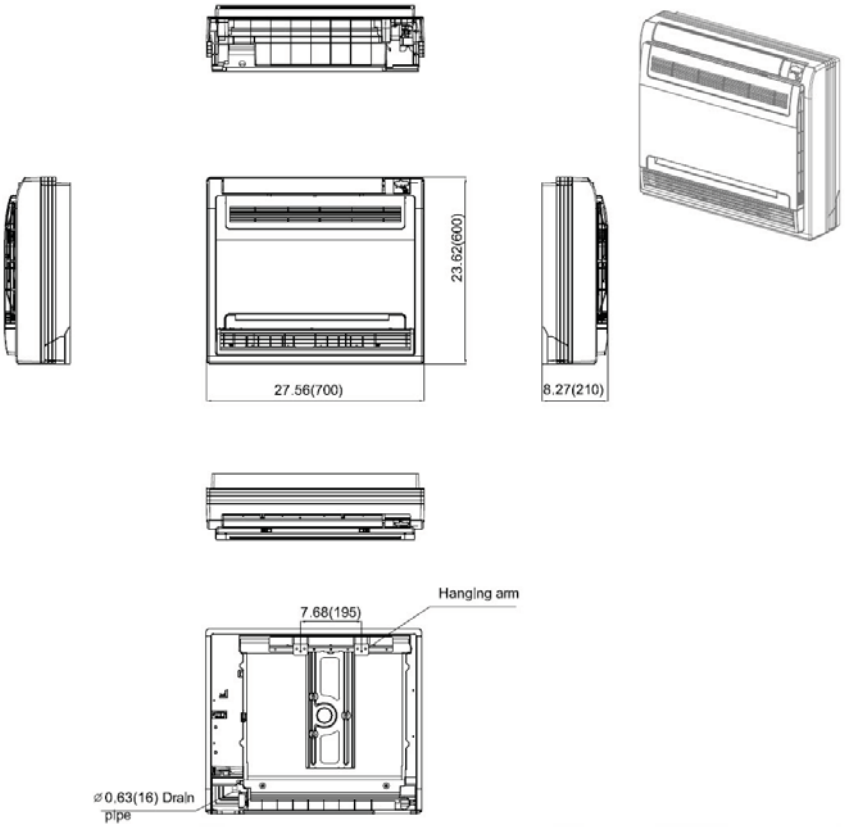

Fig. 2 — Indoor Unit

Table 2—Dimensions Indoor

UNIT SIZE			
		9	12
Height	in (mm)	8.27 (210)	8.27 (210)
Width	in (mm)	27.56 (700)	27.56 (700)
Depth	in (mm)	23.62 (600)	23.62 (600)
Weight−Net	Lb (kg.)	32.41 (14.7)	32.41 (14.7)

CLEARANCES

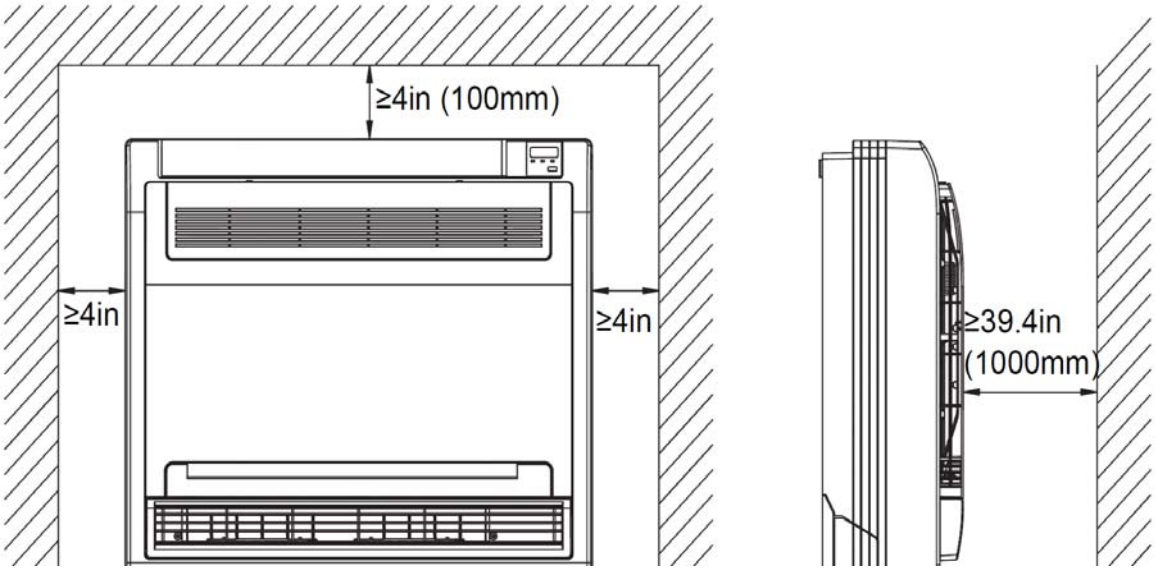

Fig. 3 – Indoor Unit Clearance

INSTALLATION LOCATION REQUIREMENTS

- A location where there are no obstacles near inlet and outlet area.
- A location which can bear the weight of indoor unit.
- Do not install indoor units near a direct source of heat such as direct sunlight or a heating appliance.
- A location which provides appropriate clearances as outlined in Fig. 4.

INDOOR UNIT INSTALLATION

INSTALL THE MOUNTING HOOKS

1. The mounting hooks should be located horizontally and level on the wall. All minimum clearances shown in Fig. 4 should be maintained.
2. Anchor the hooks at the specified location on the wall using the mounting screws (see Fig. 4). Anchor the hooks on wall studs.

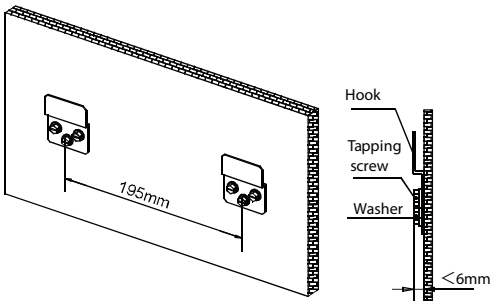

A150704

Fig. 4 — Anchor the hooks

3. Once the hooks are secured, lift the unit and mount it on the hooks. Be sure the hooks are on the correct mounting locations on the back of the unit. (see Fig 5.)

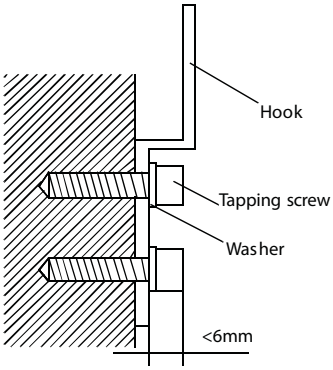

A150705

Fig. 5 — Hang the indoor unit

DRILL A HOLE IN WALL FOR INTERCONNECTING PIPING, DRAIN AND WIRING

For maximum serviceability, it is recommended that you have refrigerant line flare connections and the drain connections on the outside of the wall that the fan coil can be mounted on.

1. Determine the pipe hole position.
2. Drill the pipe hole. The outside pipe hole is 1/2–in. (13 mm) lower than the inside pipe hole, so it slants slightly downward (see Fig. 6).

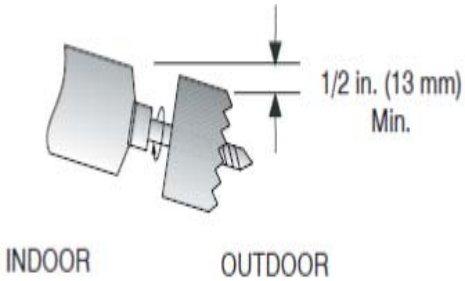

A07371

Fig. 6 — Drill holes

INDOOR UNIT PREPARATION

1. Open the Front Panel sliding the two stoppers towards the middle of the indoor unit (see Fig 7).

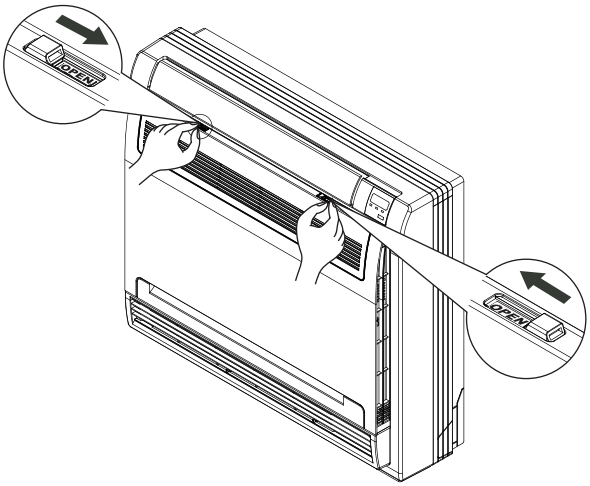

A150706

Fig. 7 — Open the Front Panel

2. Remove the front (see Fig. 8).
   a. Disengage the string.
   b. Remove the four screws.

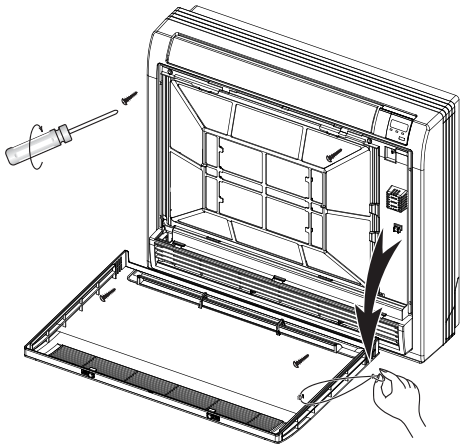

A150707

Fig. 8 — Remove the screws

3. Remove the front cover (see Fig. 9).
   a. Lift the front cover's bottom 30 degrees.
   b. Lift the front cover's top.

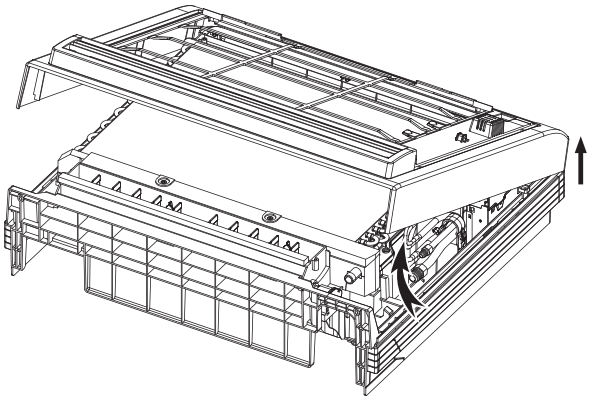

A150708

Fig. 9 — Remove the front cover

Interconnecting Piping

Flare Connection

1. Cut the pipe with a pipe cutter at 90 degrees.

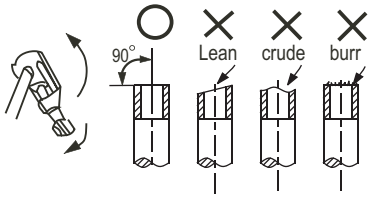

A150709

Fig. 10 — Cut the pipe

2. Remove all the burrs from the cut cross section of the pipe avoiding any burrs inside the tubes.
3. Remove the flare nuts attached to the indoor and outdoor units.
4. Insert a flare nut into a pipe and flare the pipe. Refer to Table 3 for specifications.

Table 3—Specifications

OUTER DIAM. IN. (MM)	IN.(MM)	
	MAX.	MIN.
Ø1/4" (6.35)	0.05 (1.3)	0.03 (0.7)
Ø3/8" (9.52)	0.06 (1.6)	0.04 (1.0)
Ø1/2" (12.7)	0.07 (1.8)	0.04 (1.0)

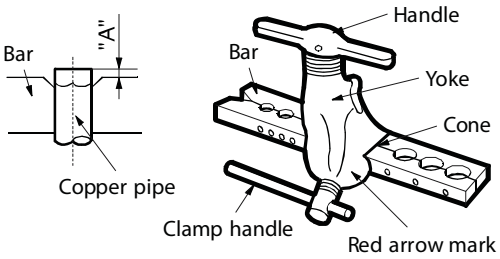

A150710

Fig. 11 — Clamp Handle

5. Apply a small amount of refrigerant oil to the flare connection on the tubing.
6. Align the center of the pipes.

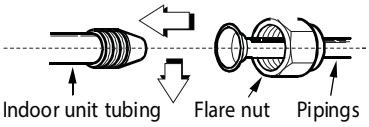

A150711

Fig. 12 — Align the pipe center

7. Connect both liquid and gas pipings to the indoor unit.
8. Tighten the flare nut using a Torque wrench as specified in the Table 4.

Table 4—Tightening

PIPE DIAMETER INCH (mm)	TIGHTENING TORQUE	
	Ft–lb	N – m
Ø1/4" (6.35)	10 to 13	13.6 to 17.6
Ø3/8" (9.52)	24 to 31	32.5 to 42.0
Ø1/2" (12.7)	37 to 46	50.1 to 62.3
Ø5/8" (15.88)	50 to 60	67.7 to 81.3

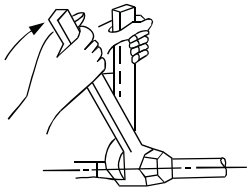

A150712

Fig. 13 — Tighten

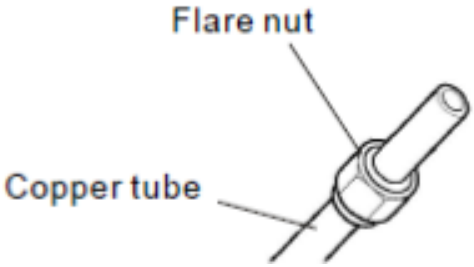

Fig. 14 — Flare nut and copper tube

ELECTRICAL CONNECTIONS

1. Remove the installation bearer of the sensing device (see Fig. 15).

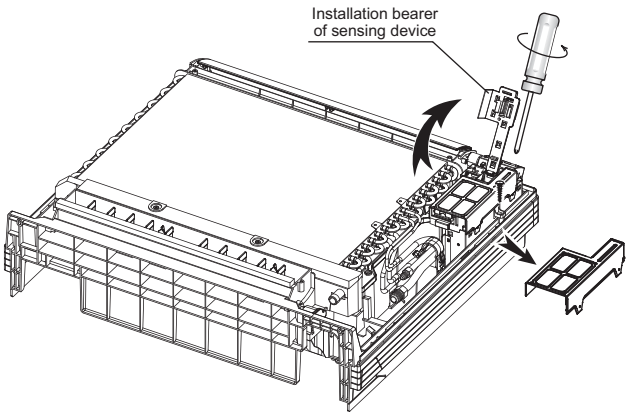

A150713

Fig. 15 — Remove installation bearer

2. Remove the Electrical Cover.
3. Connect wiring from the outdoor unit per the connection diagram Fig xx.
4. Reinstall the Electrical Cover and sensing device bearer.

CONDENSATE DRAIN CONNECTION

The unit is supplied with a drain connection to connect the drain piping. When installing condensate piping, follow these recommendations:

- Condensate piping should slope downward in the direction of the condensate flow, with a minimum gradient of 1 in. per 100 inches.
- When multiple units are connected to a common condensate drain, ensure the drain is large enough to accommodate the volume of condensate from all units. It is also recommended to place an air vent in the condensate piping to prevent any air locks.
- Condensate piping must not be installed where it may be exposed to freezing temperatures.

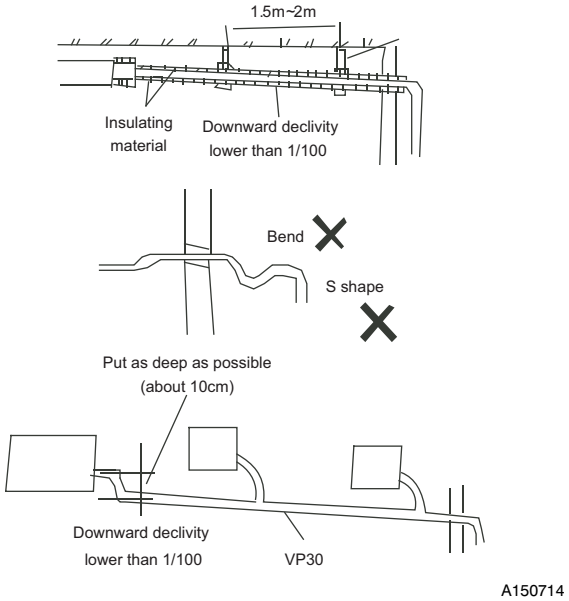

Fig. 16 — Condensate Flow

ELECTRICAL DATA

Table 5—Electrical Data

	INDOOR FAN			MAX FUSE CB AMP
UNIT SIZE	V-Ph-Hz	FLA	HP	
9K	208/230-1-60	0.09	0.073	Refer to outdoor unit installation instructions – Indoor unit powered by the outdoor unit
12K		1	0.073	

LEGEND
FLA — Full Load Amps

CONNECTION DIAGRAMS

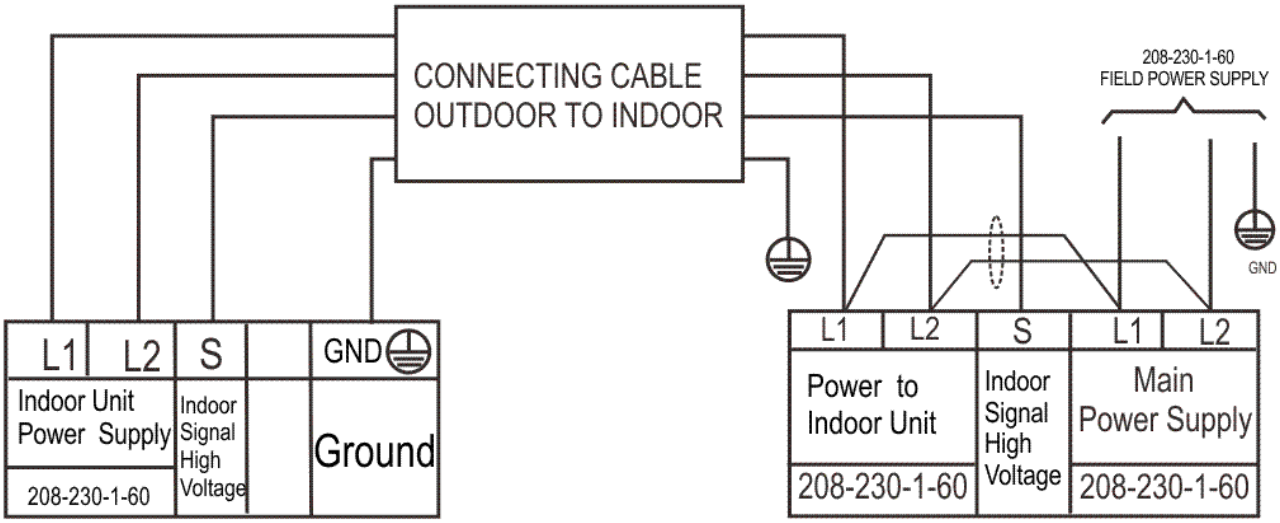

Fig. 17 — Connection Diagram

Notes:
1. Do not use thermostat wire for any connection between indoor and outdoor units.
2. All connections between indoor and outdoor units must be as shown. **The connections are sensitive to polarity and will result in a fault code.**

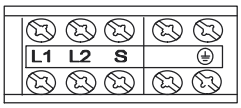

A150635

Fig. 18 — Control and Power Wiring on Indoor Unit

NOTE: **For applications where gravity cannot be used for drainage, a condensate pump accessory is available. Consult the condensate pump installation instructions for more information.**

WIRELESS REMOTE CONTROL INSTALLATION

Mounting Bracket (if installed on the wall)

1. Use the two screws supplied with the control to attach the mounting bracket to the wall in a location selected by the customer and within operating range.
2. Install the remote control batteries.
3. Place the remote control into the remote control mounting bracket.

NOTE: For remote control operation, refer to the unit owner's manual.

WIRED REMOTE CONTROL INSTALLATION

For setup instructions, refer to the Wired controller installation manual.

⚠ CAUTION

UNIT DAMAGE HAZARD

Failure to follow this caution may result in equipment damage or improper operation.

Never use the system compressor as a vacuum pump.

Refrigerant tubes and indoor coil should be evacuated using the recommended deep vacuum method of 500 microns. The alternate triple evacuation method may be used if the procedure outlined below is followed. Always break a vacuum with dry nitrogen.

Final Tubing Check

IMPORTANT: Ensure certain factory tubing on both the indoor and outdoor unit has not shifted during shipment. Ensure the tubes are not rubbing against each other or any sheet metal. Pay close attention to feeder tubes, making sure wire ties on the feeder tubes are secure and tight.

START–UP

Test Operation

Perform a test operation after completing a gas leak and electrical safety check.

1. Press **ON/OFF** on the remote control to begin testing.

NOTE: A protection feature prevents air conditioner from being activated for approximately 3 to 4 minutes.

2. Press **MODE** and select **COOLING**, **HEATING**, **FAN** mode to check if all functions work correctly.
3. To run the test using the manual button in the indoor unit:
   (1.) Open the indoor unit's front panel;
   (2.) Press the manual switch once to energize the unit. The set conditions of manual operation are as follows:
   · Preset set point: 76°F (24°C)
   · Fan speed: **AUTO**
   · Discharge air direction: Pre–set position based on operation in "Cool" or "Heat" mode.
4. Be sure to set the manual switch to **OFF** (by pressing it twice again) after finishing the test operation.

SYSTEM CHECKS

1. Conceal the tubing where possible.
2. Ensure the drain tube slopes downward along its entire length.
3. Ensure all tubing and connections are properly insulated.
4. Fasten the tubes to the outside wall, when possible.
5. Seal the hole through which the cables and tubing pass.

INDOOR UNIT

1. Do all the remote control buttons function properly?
2. Do the display panel lights work properly?
3. Does the air deflection louver function properly?
4. Does the drain work?

Explain Following Items To Customer (with the aid of the Owner's Manual):

1. How to turn air conditioner on and off; selecting **COOLING**, **HEATING** and other operating modes; setting a desired temperature; setting the timer to automatically start and stop air conditioner operation; and all other features of the remote control and display panel.
2. How to remove and clean the air filter.
3. How to set air deflection louver.
4. Explain care and maintenance.
5. Present the owner's manual and installation instructions to customer.

TROUBLESHOOTING

For ease of service, the systems are equipped with diagnostic code display LEDs on both the indoor and outdoor units.

The indoor diagnostic display is a combination of flashing LEDs on the display panel or the front of the unit. Some indoor units display error codes specifying failure modes in outdoor units.

If possible, always check the diagnostic codes displayed on the indoor unit first.

The diagnostic codes displayed in the indoor and outdoor units are listed in the Table 6.

INDOOR UNIT DIAGNOSTIC GUIDES

Table 6—Indoor Unit Diagnostic Guides

OPERATION LAMP	TIMER LAMP	DISPLAY	LED STATUS
☆1 time	X	E0	Indoor unit EEPROM error
☆ 2 times	X	E1	Communication malfunction between indoor and outdoor units
☆4 times	X	E3	Indoor fan speed has been out of control
☆5 times	X	E4	Indoor room temperature sensor T1 open circuit or short circuit
☆6 times	X	E5	Evaporator coil temperature sensor T2 open circuit or short circuit
☆7 times	X	EC	Refrigerant leakage detection
☆8 times	X	EE	Water−level alarm malfunction
☆1 time	O	F0	Current overload protection
☆2 times	O	F1	Open circuit or short circuit of outdoor ambient temperature sensor T4
☆3 times	O	F2	Open circuit or short circuit of condenser coil temperature sensor T3
☆4 times	O	F3	Open circuit or short circuit of Compressor discharge temperature sensor T5
☆5 times	O	F4	Outdoor unit EEPROM error
☆6 times	O	F5	Outdoor fan speed has been out of control
☆7 times	O	F6	T2B sensor error
☆8 times	O	F7	Lifting−panel communication error
☆9 times	O	F8	Lifting−panel malfunction
☆10 times	O	F9	Lifting−panel is not closed
☆1 time	☆	P0	IPM malfunction
☆2 times	☆	P1	Over voltage or over low voltage protection
☆3 times	☆	P2	High temperature protection of compressor top
☆4 times	☆	P3	Outdoor low temperature protection
☆5 times	☆	P4	Inverter compressor drive error
☆6 times	☆	P5	Mode conflict
☆7 times	☆	P6	Compressor low−pressure protection
☆8 times	☆	P7	Outdoor IGBT temperature sensor error

O (light) X (off) ☆ (flash)

For additional diagnostic information, refer to the *Service Manual.*

©2016 Bryant Heating & Cooling Systems 7310 W. Morris St. Indianapolis, IN 46231
Edition Date: 03/16

Catalog No. 619RF−02SI

Manufacturer reserves the right to discontinue, or change at any time, specifications or designs without notice and without incurring obligations.

Replaces: 619RF−01SI