TEMPSTAR
Heating and Cooling Products

**D5CVRA**

**Outdoor Unit Single Zone Ductless System**
**Sizes 9 to 36**

# Product Data

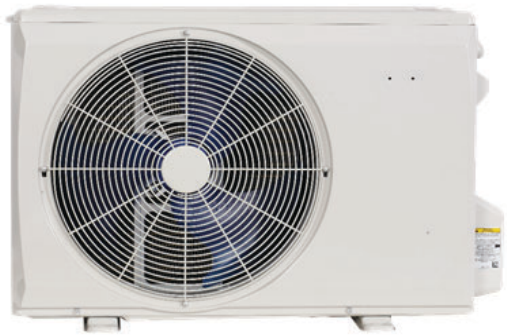

**Fig. 1 – Sizes 09K - 24K**

**NOTE:** Images are for illustration purposes only. Actual models may differ slightly.

## Table of Contents


INDUSTRY LEADING FEATURES / BENEFITS . . . . . 1
MODEL NUMBER NOMENCLATURE . . . . . 2
STANDARD FEATURES . . . . . 3
ACCESSORIES . . . . . 3
DIMENSIONS . . . . . 3
Table 1 – Dimensions and Weights (Heat Pump Models) . . . . . 3
CLEARANCES . . . . . 4
Table 2 – Outdoor Unit Clearance Dimensions . . . . . 4
APPLICATION DATA . . . . . 5
Table 3 – System Operating Conditions . . . . . 5
Table 4 – Additional Charge . . . . . 5
SPECFICATIONS . . . . . 6
CAPACITY AND COMPATIBILITY . . . . . 8
PERFORMANCE . . . . . 8
ELECTRICAL DATA . . . . . 8
COOLING PERFORMANCE DATA (HEAT PUMP) . . . . . 9
Table 5 – 9K, 115V Cooling Performance . . . . . 9
Table 6 – 12K, 115V Cooling Performance . . . . . 13
Table 7 – 9K Cooling Performance . . . . . 17
Table 8 – 12K Cooling Performance . . . . . 21
Table 9 – 18K Cooling Performance . . . . . 25
Table 10 – 24K Cooling Performance . . . . . 29
HEATING PERFORMANCE DATA (HEAT PUMP) . . . . . 33
Table 11 – 9K, 115V Heating Performance . . . . . 33
Table 12 – 12K, 115V Heating Performance . . . . . 35
Table 13 – 9K Heating Performance . . . . . 37
Table 14 – 12K Heating Performance . . . . . 39
Table 15 – 18K Heating Performance . . . . . 41
Table 16 – 24K Heating Performance . . . . . 43
WIRING . . . . . 45
WIRING DIAGRAMS . . . . . 45
GUIDE SPECIFICATIONS . . . . . 47


## INDUSTRY LEADING FEATURES / BENEFITS

### A PERFECT BALANCE BETWEEN BUDGET LIMITS, ENERGY SAVINGS AND COMFORT

The D5CVRA series ductless systems are a matched combination of an outdoor condensing unit and an indoor fan coil unit connected only by refrigerant tubing and wires.

A ductless system permits creative solutions to design problems such as:

- Add-ons to current space (an office or family room addition)
- Special space requirements
- When changes in the load cannot be handled by the existing system
- When adding air conditioning to spaces that are heated by hydronic or electric heat and have no ductwork
- Historical renovations or any application where preserving the look of the original structure is essential.

The ideal compliment to your ducted system when it is impractical or prohibitively expensive to use ductwork.

The compact indoor fan coil units take up very little space in the room and do not obstruct windows. The fan coils are attractively styled to blend with most room decors. Advanced system components incorporate innovative technology to provide reliable cooling performance at low sound levels.

### Inverter Technology

The inverter driven compressor is designed to run at various input power frequencies (Hz) which controls the compressor's motor speed.

**Even Temperature** – The control package, including the inverter, monitors the outdoor and indoor temperatures as they relate to the selected indoor set point and adjusts the compressor speed to match the load and keep the system operating continuously rather than cycling and creating temperature swings. This translates to higher comfort levels for the occupants.

**Rapid Pull Down/Warm-Up** – Comfort is increased by the inverter system's ability to ramp up the compressor speed enabling the system to reach the user selected room temperature set point quicker.

**Humidity Control** – Running the system for longer periods and continuously varying the compressor speed enhances the humidity control.

### Individual Room Comfort

Maximum comfort is provided because each space can be controlled individually based on the usage pattern.

### Low Sound Levels

When noise is a concern, ductless systems are the answer. The indoor units are whisper quiet. There are no compressors indoors, either in the conditioned space or directly over it, and there is none of the noise usually generated by air being forced through the ductwork.

When sound ordinances and proximity to neighbors demand quiet operation, the D5CVRA unit is the right choice. With the inverter technology, these units run at lower speeds most of the time resulting in reduced sound levels.

## Inverter Technology – Enhanced Economical Operation

Ductless systems are inherently economical to operate. Individual rooms are heated or cooled only when required, and since the air is delivered directly to the space, there is no need to use additional energy to move the air in the ductwork. This economical operation is enhanced further when the inverter system output matches the load resulting in a more efficient system.

## Easy-To-Use Controls

The systems have microprocessor-based controls to provide the ultimate in comfort and efficiency. The user friendly wired and wireless remote controls provide the interface between the user and the unit.

## Secure Operation

If security is an issue, outdoor and indoor units are connected only by refrigerant piping and wiring to prevent intruders from crawling through ductwork or wall openings. In addition, since the D5CVRA can be installed close to an outside wall, coils are protected from vandals and severe weather.

## Fast Installation

This compact ductless system is simple to install. Only wires and piping need to run between the indoor and outdoor units. These units are fast and easy to install ensuring minimal disruption to customers in homes or the workplace. This makes the D5CVRA systems the equipment of choice for retrofit applications.

## Simple Servicing and Maintenance

Removing the top panel of the outdoor unit provides immediate access to the control compartment, providing the service technician access to the diagnostic LEDs to facilitate the troubleshooting process. In addition, the draw-thru design of the outdoor unit means that dirt accumulates on the outside surface of the coil. Coils can be cleaned quickly from the inside using a pressure hose and detergent.

On the indoor units, service and maintenance expense is reduced due to the permanent easy to clean filters. Also, error codes are displayed on the front panel to alert the user to certain system malfunctions.

## Built-in Reliability

Ductless system indoor and outdoor units are designed to provide years of trouble-free operation. Both the indoor and outdoor units are well protected. Whenever the microprocessor detects abnormal conditions, the unit stops and an error code appears.

Inverter systems provide additional reliability due to the soft start. This refers to the ability of the inverter to start the compressor motor using reduced voltage and reduced current. This feature is beneficial from an electrical standpoint (eliminates current spikes) as well as an overall reliability standpoint due to reduced stress on all associated system components.

## Agency Listings

All systems are listed with AHRI (Air conditioning, Heating, and Refrigeration Institute) and are UL certified.

## MODEL NUMBER NOMENCLATURE

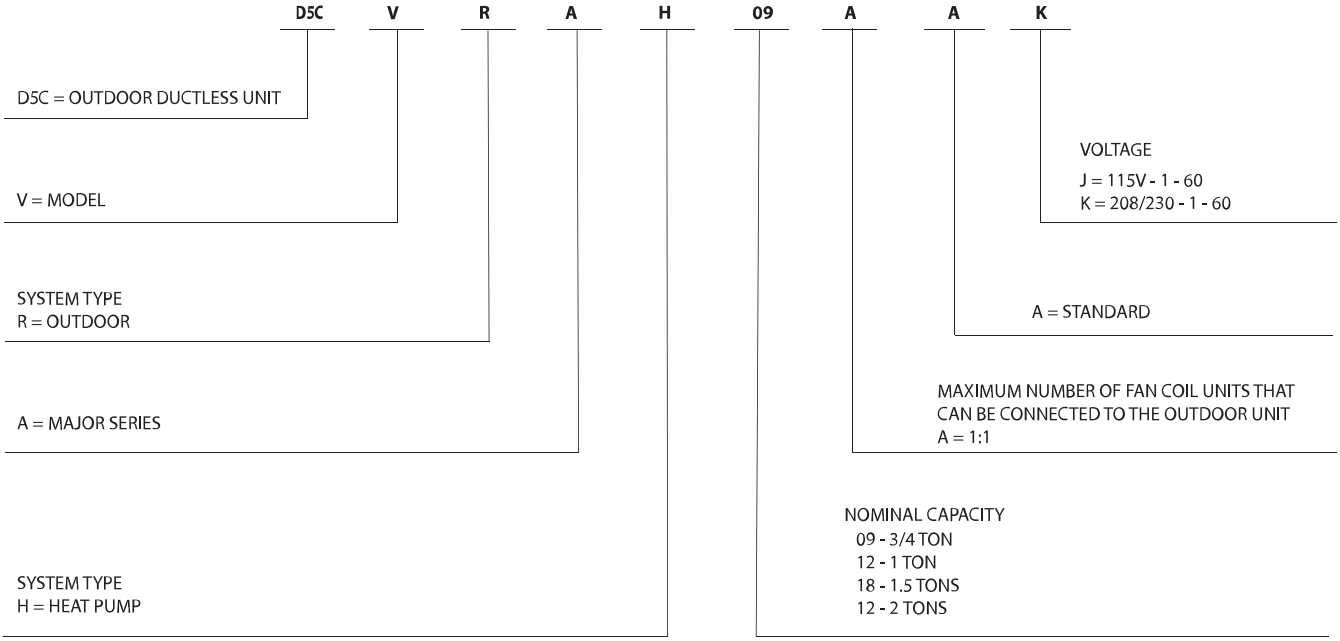


Use of the AHRI Certified TM Mark indicates a manufacturer's participation in the program For verification of certification for individual products, go to www.ahridirectory.org.

## STANDARD FEATURES

| | |
|---|---|
| **Ease Of Installation** | |
| Low Voltage Controls | S |
| **Comfort Features** | |
| Microprocessor Controls | S |
| Auto Restart Function | S |
| Auto Changeover | S |
| **Energy Saving Features** | |
| Inverter Driven Compressor | S |
| 46° F Heating Mode (Heating Setback) | S |
| **Safety And Reliability** | |
| 3 Minute Time Delay For Compressor | S |
| High Compressor Discharge Temperature | S |
| Low Voltage Protection | S |
| Compressor Overload Protection | S |
| Compressor Over Current Protection | S |
| IPM Module Protection | S |
| Condenser High Temp Protection in Cooling Mode | S |
| Aluminum Hydrophilic pre-coated fins | S |
| **Ease Of Service And Maintenance** | |
| Diagnostics | S |
| Liquid Line Pressure Taps | S |
| **Application Flexibility** | |
| Crankcase Heater | S |
| Base pan Heater on Heat Pump units only | S |

**Legend**
S - Standard
A - Accessory

## ACCESSORIES

| Outdoor Unit Model Number | Base Pan Base Rubber Plugs RCD Part No. | Quantity per Unit |
|---|---|---|
| D5CVRAH09AAJ | 12600801A00077 | 32 |
| D5CVRAH12AAJ | | |
| D5CVRAH09AAK | | |
| D5CVRAH12AAK | | |
| D5CVRAH18AAK | | 26 |
| D5CVRAH24AAK | | 34 |

**NOTE:** The base pan is built in with multiple holes for proper draining during the defrost process. For applications where it is required to seal these holes, and re-direct the condensate drain, rubber plugs are available through RC.

### Outdoor Units

#### Crankcase Unit

The crankcase heater is standard on all unit sizes. Heater clamps must be placed around the compressor oil stump.

#### Base Pan Heater

The base pan heater is standard on all unit sizes.

## DIMENSIONS

**Table 1 – Dimensions and Weights (Heat Pump Models)**

| System Size | | 9K 115V | 12K 115V | 9K | 12K | 18K | 24K |
|---|---|---|---|---|---|---|---|
| | | (115 V) | | (208/230 V) | | | |
| Height (H) | inch | 19.49 | 19.49 | 19.49 | 19.49 | 21.85 | 26.5 |
| | mm | 495 | 495 | 495 | 495 | 555 | 673 |
| Width (W) | inch | 28.35 | 28.35 | 28.35 | 28.35 | 30.12 | 35.04 |
| | mm | 720 | 720 | 720 | 720 | 765 | 890 |
| Depth (D) | inch | 10.63 | 10.63 | 10.63 | 10.63 | 11.93 | 13.46 |
| | mm | 270 | 270 | 270 | 270 | 303 | 342 |
| Weight -Net | lbs. | 53.35 | 53.79 | 51.59 | 51.59 | 62.17 | 96.34 |
| | kg | 24.2 | 24.4 | 23.4 | 23.4 | 28.2 | 43.7 |
| Mounting Dimensions A/B | A - inch (mm) | 17.8(452) | 17.8(452) | 17.8(452) | 17.8(452) | 17.8(452) | 26.1(663) |
| | B - inch (mm) | 10.0(255) | 10.0(255) | 10.0(255) | 10.0(255) | 11.3(286) | 13.9(354) |

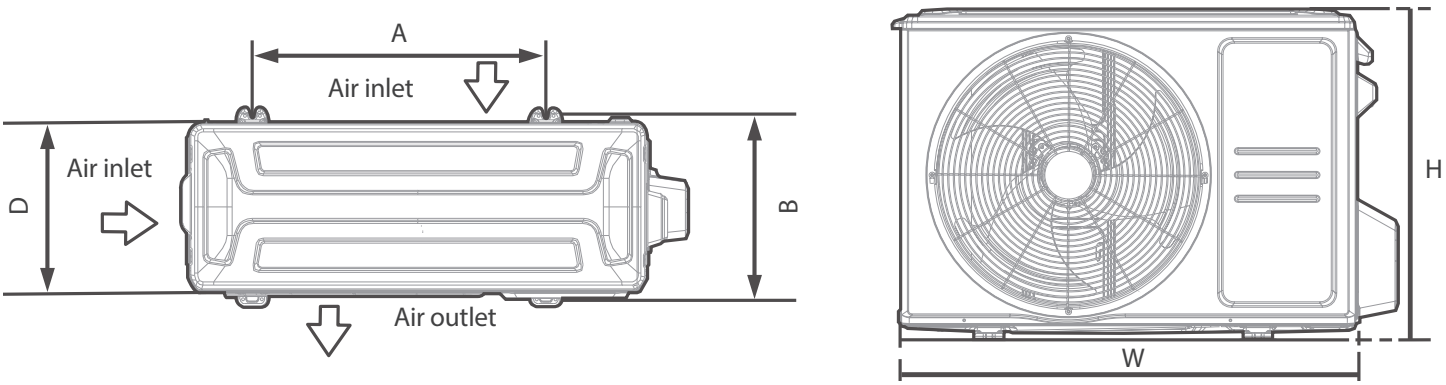


**Fig. 2 – System Sizes and Mounting Dimensions (all Models)**

## CLEARANCES

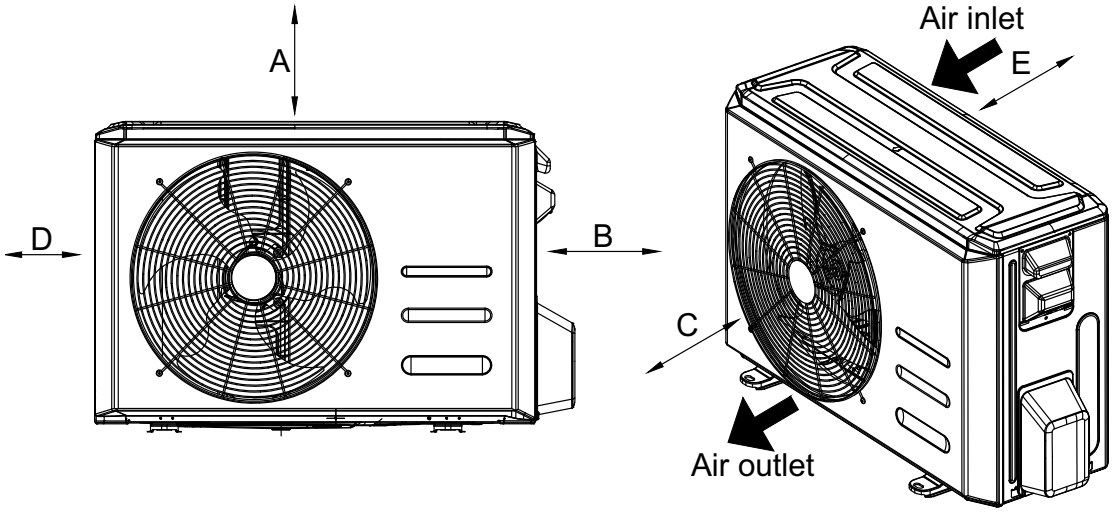


**Fig. 3 – Outdoor Unit Clearances**

**Table 2 – Outdoor Unit Clearance Dimensions**

| UNIT | MINIMUM VALUE in. (mm) |
|---|---|
| A | 20 (500) |
| B | 14 (350) |
| C | 20 (500) |
| D | 4 (100) |
| E | 4 (100) |

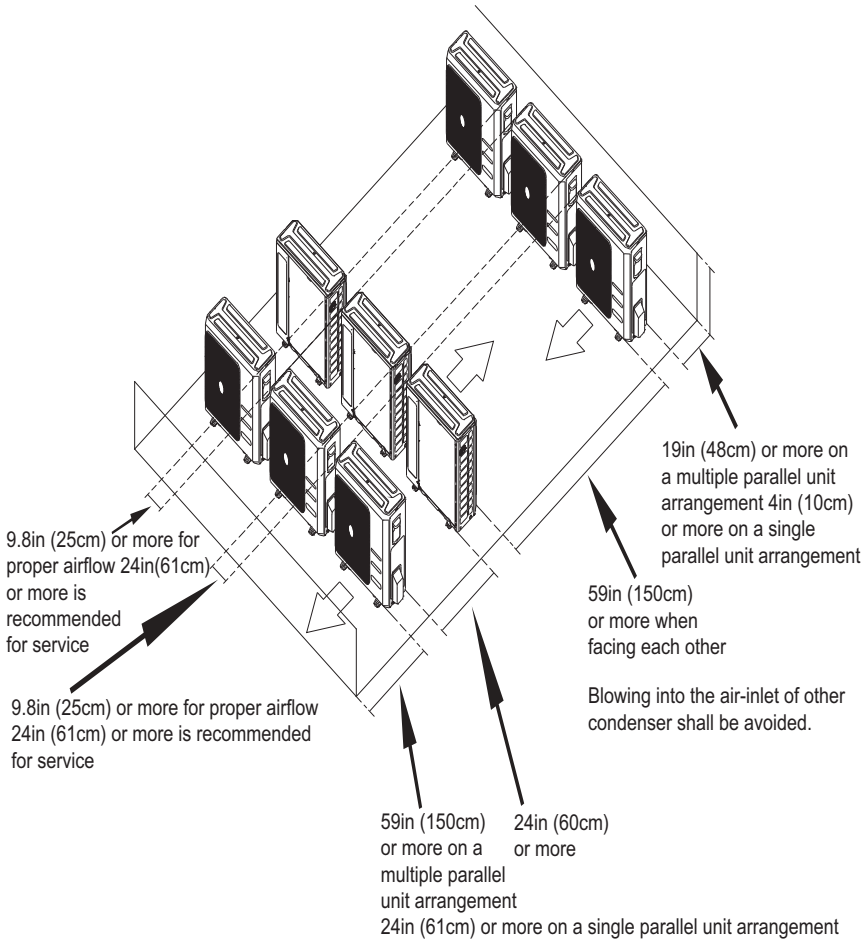


**Fig. 4 – Clearances for Multiple Units**

# APPLICATION DATA

## Unit Selection

Select equipment that either matches or supports slightly more than the anticipated peak load. This provides better humidity control, fewer unit cycles, and less part-load operation.

For units used in spaces with high sensible loads, base equipment selection on unit sensible load, not on total anticipated load. Adjust for anticipated room wet bulb temperature to avoid undersizing the equipment.

## Unit Mounting (Outdoor)

Refer to the unit's installation instructions for further details.

**Unit leveling** - For reliable operation, units should be level in all planes.

**Clearance** - Minimum clearance must be provided for airflow. The condensing units are designed for free-flow application. Air inlets and outlets should not be restricted.

**Unit location** - A location which is convenient to installation and not exposed to strong winds. A location that can bear the weight of the outdoor unit and where the outdoor unit can be mounted in a level position.

Do not install the indoor or outdoor units in a location with special environmental conditions. For those applications, contact your sales representative.

**Table 3 – System Operating Conditions**

| OPERATING RANGE MIN / MAX °F (°C) | | |
|---|---|---|
| | Cooling | Heating |
| Outdoor DB | 5 ~ 122 (-15 ~ 50) | 5 ~ 75 (-15 ~ 24) |

**NOTE:** Reference the product installation instructions for more information.

## Metering Devices

The outdoor unit utilizes a capillary tube to manage the connected fan coil's refrigerant flow.

## Drain Connections

Install drains to meet the local sanitation codes.

## Refrigerant Lines

**General refrigerant line sizing:**

1. The outdoor units are shipped with a full charge of R-454B refrigerant. All charges, line sizing, and capacities are based on runs of 25 ft. (7.6 m). For runs over 25 ft. (7.6 m), review the *Long Line Applications* section for the proper charge adjustments.
2. Refrigerant lines should not be buried in the ground. If it is necessary to bury the lines, do not bury more than 36-in (914 mm). Provide a minimum 6-in (152 mm) vertical rise to the service valves to prevent refrigerant migration.
3. Both lines must be insulated. Use a minimum of 1/2-in. (12.7 mm) thick insulation. Closed-cell insulation is recommended in all long-line applications.
4. Special consideration should be given to isolating the interconnecting tubing from the building structure. Isolate the tubing so vibration or noise is not transmitted into the structure.

**Long Line Applications:**

1. No change in line sizing is required.
2. Add refrigerant per the **Additional Charge** table.

**Table 4 – Additional Charge**

| Unit Size | Total Line Length ft. (m) | | Additional Charge, oz/ft. (g/m) | | | |
|---|---|---|---|---|---|---|
| | Min | Max | 10-25 (3-9) | >25-82 (8-25) | >82-98 (25-30) | >98-164 (30-50) |
| 9 | 10(3) | 82(25) | None | 0.16 | | |
| 12 | | | | | | |
| 18 | | 98(30) | | | 0.16 | |
| 24 | | 164(50) | | 0.32 | 0.32 | 0.32 |

# SPECFICATIONS

| Outdoor Model | | | D5CVRAH09AAJ | D5CVRAH12AAJ | D5CVRAH09AAK | D5CVRAH12AAK | D5CVRAH18AAK | D5CVRAH24AAK |
|---|---|---|---|---|---|---|---|---|
| Power supply | | V;Ph;Hz | 115V; 1Ph;60HZ | 115V; 1Ph;60HZ | 208/230V; 1Ph;60HZ | 208/230V; 1Ph;60HZ | 208/230V; 1Ph;60HZ | 208/230V; 1Ph;60HZ |
| COMPRESSOR SPECIFICATIONS | Model | | KSK103D33UEZ3 | KSK103D33UEZ3 | KSK103D33UEZ3 | KSK103D33UEZ3 | KSN140D21UFZ | KTM240D46UKT2 |
| | Type | | ROTARY | ROTARY | ROTARY | ROTARY | ROTARY | ROTARY |
| | Brand | | GMCC | GMCC | GMCC | GMCC | GMCC | GMCC |
| | Capacity | W | 2035/3255 | 2035/3255 | 2035/3255 | 2035/3255 | 4385 | 4780/7600 |
| | | Btu/h | 6943/11106 | 6943/11106 | 6943/11106 | 6943/11106 | 14962 | 16309/25931 |
| | Input | W | 325/826 | 325/826 | 325/826 | 325/826 | 1140 | 805/2045 |
| | RLA | A | 2.40/5.65 | 2.40/5.65 | 2.40/5.65 | 2.40/5.65 | 7.5 | 4.15/9.30 |
| | Refrigerant Oil | | ESTER OIL | ESTER OIL | ESTER OIL | ESTER OIL | ESTER OIL | ESTER OIL |
| | Oil Type | | VG74 | VG74 | VG74 | VG74 | VG74 | VG74 |
| | Oil Charge | fl. Oz | 10.48 | 10.48 | 10.48 | 10.48 | 14.88 | 20.97 |
| OUTDOOR FAN SPECIFICATIONS | Material | - | Acrylonitrile Styrene +20%GF | | | | | |
| | Type | - | ZL-415*129*8-3KN | ZL-415*129*8-3KN | ZL-415*129*8-3KN | ZL-415*129*8-3KN | ZL-421*133*8-3KN | ZL-535*133*12-3KFN |
| | Diameter | inch | 16.3 | 16.3 | 16.3 | 16.3 | 16.6 | 21.1 |
| | | mm | 415 | 415 | 415 | 415 | 421 | 535 |
| | Height | inch | 5.1 | 5.1 | 5.1 | 5.1 | 5.2 | 5.2 |
| | | mm | 129 | 129 | 129 | 129 | 133 | 133 |
| OUTDOOR MOTOR SPECIFICATIONS | Model | - | ZKFN-25-10-5L | ZKFN-34-10-1-3 | ZKFN-25-10-5L | ZKFN-25-10-5L | ZKFN-34-10-1-3 | ZKFN-80-8-3 |
| | Type | - | DC | DC | DC | DC | DC | DC |
| | Input | W | 49.3 | 35.0 | 42.1 | 42.1 | 35.0 | 112.3 |
| | Max. input | W | 135.0 | 81.0 | 135.0 | 135.0 | 81.0 | 239 |
| | Output | W | 37.0 | 26.3 | 31.6 | 31.6 | 26.3 | 84.2 |
| | FLA | A | 0.5 | 0.5 | 0.35 | 0.35 | 0.4 | 0.8 |
| | Rated HP | HP | 0.05 | 0.04 | 0.04 | 0.04 | 0.04 | 0.11 |
| | Range of current | Amps | 0.48~1.24 | 0.56~0.85 | 0.48~1.24 | 0.48~1.24 | 0.56~0.85 | 0.33~1.85 |
| | Rated current | Amps | 0.54 | 0.62 | 0.48 | 0.48 | 0.62 | 0.95 |
| | Speed | rev/min | 850/600 | 800/600 | 800/600 | 800/600 | 810/450 | 830/700/550 |
| | Rated RPM | rev/min | 850 | 800 | 800 | 800 | 810 | 830 |
| | Insulation class | - | E | E | E | E | E | E |
| | Safe class | - | IP24 | IP24 | IP24 | IP24 | IP24 | IPX4 |
| OUTDOOR REFRIGERANT COIL SPECIFICATIONS | Number of rows | Rows | 1 | 1 | 1 | 1 | 2 | 1.6 |
| | Tube outside dia. | inch | 0.276 | 0.276 | 0.276 | 0.276 | 0.276 | 0.276 |
| | | mm | Φ7 | Φ7 | Φ7 | Φ7 | Φ7 | Φ7 |
| | Nominal Tube Wall | mm | 0.00945 (0.24) | 0.00945 (0.24) | 0.00945 (0.24) | 0.00945 (0.24) | 0.00945 (0.24) | 0.00945 (0.24) |
| | Tube Enhancement | (Yes/No) | Yes | Yes | Yes | Yes | Yes | Yes |
| | Tube Material | | Copper | Copper | Copper | Copper | Copper | Copper |
| | Tube pitch(a) x row pitch (b) | inch | 0.83× 0.87 | 0.83× 0.87 | 0.83× 0.87 | 0.83× 0.87 | 0.83× 0.53 | 0.83× 0.87 |
| | | mm | 21x22 | 21x22 | 21x22 | 21x22 | 21x13.37 | 21x22 |
| | Fin Spacing | FPI | 20 | 20 | 20 | 20 | 19 | 20 |
| | | mm | 1.3 | 1.3 | 1.3 | 1.3 | 1.4 | 1.3 |
| | Fin type | | Plain fin | | | | | |
| | Fin Material | | Gold hydrophilic aluminum | | | | | |
| | Coil length x height x width | inch | 29.13x18.19x0.87 | 29.13x18.19x0.87 | 29.13x18.19x0.87 | 29.13x18.19x0.87 | 29.72x19.84x0.53+28.94x19.84x0.53 | 35.43x23.98x0.87+21.26x23.98x0.87 |
| | | mm | 740x462x22 | 740x462x22 | 740x462x22 | 740x462x22 | 755*504*13.37+735*504*13.37 | 900*609*22+540*609*22 |
| | Face area | ft2 | 3.68 | 3.68 | 3.68 | 3.68 | 4.10 | 5.90 |
| | Number of circuits | # | 2 | 2 | 2 | 2 | 4 | 5 |
| | High Burst Pressure | Psi (MPa) | 550(3.79) | 550(3.79) | 550(3.79) | 550(3.79) | 550(3.79) | 550(3.79) |
| | Low Burst Pressure | Psi (MPa) | 340(2.34) | 340(2.34) | 340(2.34) | 340(2.34) | 340(2.34) | 340(2.34) |

**Manufacturer reserves the right to change, at any time, specifications and designs without notice and without obligations.**

# SPECFICATIONS (CONTINUED)

| Outdoor Model | | | D5CVRAH09AAJ | D5CVRAH12AAJ | D5CVRAH09AAK | D5CVRAH12AAK | D5CVRAH18AAK | D5CVRAH24AAK |
|---|---|---|---|---|---|---|---|---|
| Piping and Refrigerant Information | Refrigerant Type | Type | R-454B | | | | | |
| | Charge Amount | lb. (kg) | 1.01(0.46) | 1.28(0.58) | 1.28(0.58) | 1.28(0.58) | 2.38(1.08) | 3.42(1.55) |
| | Additional refrigerant charge | Oz/ft (g/m) | 0.16(15) | 0.16(15) | 0.16(15) | 0.16(15) | 0.16(15) | 0.32(30) |
| | Liquid Pipe (size - connection type) | In (mm) | 1/4in (6.35mm) | 1/4in (6.35mm) | 1/4in (6.35mm) | 1/4in (6.35mm) | 1/4in (6.35mm) | 3/8in (9.52mm) |
| | Suction Pipe (size - connection type) | In (mm) | 3/8in (9.52mm) | 3/8in (9.52mm) | 3/8in (9.52mm) | 3/8in (9.52mm) | 1/2in (12.7mm) | 5/8in (15.9mm) |
| | Min. Piping Length | ft. (m) | 9.8 (3) | 9.8 (3) | 9.8 (3) | 9.8 (3) | 9.8 (3) | 9.8 (3) |
| | Standard Piping Length | ft. (m) | 24.6 (7.5) | 24.6 (7.5) | 24.6 (7.5) | 24.6 (7.5) | 24.6 (7.5) | 24.6 (7.5) |
| | Max. Piping Length with no additional refrigerant charge per System | ft. (m) | 24.6 (7.5) | 24.6 (7.5) | 24.6 (7.5) | 24.6 (7.5) | 24.6 (7.5) | 24.6 (7.5) |
| | Total Maximum Piping Length per system | ft. (m) | 82.02(25) | 82.02(25) | 82.02(25) | 82.02(25) | 98.42(30) | 164.04(50) |
| | Max. outdoor-indoor height difference (OU higher than IU) | ft. (m) | 49.21(15) | 49.21(15) | 49.21(15) | 49.21(15) | 65.62(20) | 82.02(25) |
| | Max. outdoor-indoor height difference (IU higher than OU) | ft. (m) | 49.21(15) | 49.21(15) | 49.21(15) | 49.21(15) | 65.62(20) | 82.02(25) |
| AIRFLOW SPECIFICATIONS | Outdoor (CFM) | CFM | 1059.4 | 1059.4 | 1059.4 | 1059.4 | 1236.0 | 1765.7 |
| SOUND DATA | Outdoor Sound Pressure Level | dB(A) | 54.5 | 52 | 54.5 | 54.5 | 57 | 60.5 |
| ENVIRONMENTAL SPECIFICATIONS | Cooling Operating Range: Indoor Min - Max DB | °F | 60~90 | 60~90 | 60~90 | 60~90 | 60~90 | 60~90 |
| | | (°C) | (16~32) | (16~32) | (16~32) | (16~32) | (16~32) | (16~32) |
| | Cooling Operating Range: Indoor Min - Max WB | °F | 59-84 | 59-84 | 59-84 | 59-84 | 59-84 | 59-84 |
| | | (°C) | (15-29) | (15-29) | (15-29) | (15-29) | (15-29) | (15-29) |
| | Cooling Operating Range: Outdoor Min - Max DB | °F | 5~122 | 5~122 | 5~122 | 5~122 | 5~122 | 5~122 |
| | | (°C) | (-15~50) | (-15~50) | (-15~50) | (-15~50) | (-15~50) | (-15~50) |
| | Heating Operating Range Indoor Min - Max DB | °F | 32~86 | 32~86 | 32~86 | 32~86 | 32~86 | 32~86 |
| | | (°C) | (0~30) | (0~30) | (0~30) | (0~30) | (0~30) | (0~30) |
| | Heating Operating Range Outdoor Min -Max DB | °F | 5~75 | 5~75 | 5~75 | 5~75 | 5~75 | 5~75 |
| | | (°C) | (-15~50) | (-15~50) | (-15~50) | (-15~50) | (-15~50) | (-15~50) |
| | Non-operating environment Storage Temperature range (DB) | °F | -49-140 | -49-140 | -49-140 | -49-140 | -49-140 | -49-140 |
| | | (°C) | (-45-60) | (-45-60) | (-45-60) | (-45-60) | (-45-60) | (-45-60) |
| | Operation Humidity | % | 0-80 % | 0-80 % | 0-80 % | 0-80 % | 0-80 % | 0-80 % |
| | Ambient Humidity | % | 0-80 % | 0-80 % | 0-80 % | 0-80 % | 0-80 % | 0-80 % |

**Manufacturer reserves the right to change, at any time, specifications and designs without notice and without obligations.**

## CAPACITY AND COMPATIBILITY

| MODEL SIZE | Voltage | HIGH WALL INDOOR UNIT WITH SENSORS | OUTDOOR UNIT | HIGH WALL INDOOR UNIT WITHOUT SENSORS | OUTDOOR UNIT |
|---|---|---|---|---|---|
| **9K** | **115** | D5FVHAH09XAJ | N/A | D5FVHAH09XCJ | D5CVRAH09AAJ |
| **12K** | **115** | D5FVHAH12XAJ | N/A | D5FVHAH12XCJ | D5CVRAH12AAJ |
| **9K** | **208/230** | D5FVHAH09XAK | D5CMTAH18CAK<br>D5CMTAH27DAK<br>D5CMTAH36EAK<br>D5CMTAH48FAK | D5FVHAH09XCK | D5CVRAH09AAK |
| **12K** | **208/230** | D5FVHAH12XAK | D5CMTAH18CAK<br>D5CMTAH27DAK<br>D5CMTAH36EAK<br>D5CMTAH48FAK | D5FVHAH12XCK | D5CVRAH12AAK |
| **18K** | **208/230** | D5FVHAH18XAK | D5CMTAH18CAK<br>D5CMTAH27DAK<br>D5CMTAH36EAK<br>D5CMTAH48FAK | D5FVHAH18XCK | D5CVRAH18AAK |
| **24K** | **208/230** | D5FVHAH24XAK | D5CMTAH27DAK<br>D5CMTAH36EAK<br>D5CMTAH48FAK | D5FVHAH24XCK | D5CVRAH24AAK |

**NOTE:** Highwall units without sensors cannot be paired with multi-zone outdoor units per UL regulatory requirements for a leak dissipation sensor at the indoor unit.

## PERFORMANCE

| **Indoor unit type** | | **Value Tier High Wall** | | | | | |
|---|---|---|---|---|---|---|---|
| **Indoor model** | | **D5FVHAH09XAJ** | **D5FVHAH12XAJ** | **D5FVHAH09XAK** | **D5FVHAH12XAK** | **D5FVHAH18XAK** | **D5FVHAH24XAK** |
| **Outdoor model** | | **D5CVRAH09AAJ** | **D5CVRAH12AAJ** | **D5CVRAH09AAK** | **D5CVRAH12AAK** | **D5CVRAH18AAK** | **D5CVRAH24AAK** |
| **Power supply** | **V;Ph;Hz** | 115V;1Ph;60HZ | 115V;1Ph;60HZ | 208/230V;1Ph;60 HZ | 208/230V;1Ph;60 HZ | 208/230V;1Ph;60HZ | 208/230V;1Ph;60HZ |
| Cooling Rated Capacity (DOE A2 - 95°F) | Btu/h | 9000 | 12000 | 9000 | 12000 | 17000 | 24000 |
| Cooling Capacity Range | Btu/h | 2700~9900 | 3600~12500 | 3600~12500 | 3600~12500 | 6300~17900 | 6400~24200 |
| SEER2 | Btu/h.W | 18 | 19 | 19 | 18 | 18.3 | 17 |
| EER2 (DOE A2 - 95°F) | Btu/h.W | 10.1 | 8.8 | 10.9 | 8.8 | 9.9 | 9 |
| Heating Rated Capacity (DOE H12 - 47°F) | Btu/h | 9800 | 12000 | 10000 | 12000 | 18000 | 24000 |
| Heating Capacity Range | Btu/h | 3800~10600 | 3800~12400 | 3800~12400 | 3800~12400 | 4600~18800 | 5800~27000 |
| COP (DOE H12 - 47°F) | W/W | 2.65 | 2.84 | 3.37 | 2.89 | 2.88 | 2.78 |
| HSPF2 IV | Btu/h.W | 9 | 9.2 | 9.7 | 8.8 | 8.7 | 8.5 |
| HSPF2 V | Btu/h.W | 7 | 7 | 7.5 | 7 | 6.7 | 6.9 |
| Heating Rated Capacity (DOE H32 - 17°F) | Btu/h | 6900 | 7700 | 8000 | 8000 | 11200 | 17100 |
| COP (DOE H32 - 17°F) | W/W | 2.32 | 2.6 | 2.57 | 2.57 | 2.42 | 2.29 |
| Heating Maximum Capacity (17°F) | Btu/h | 7200 | 7900 | 8300 | 8300 | 11200 | 18400 |
| Heating Rated Capacity (ODE H42 - 5°F) | Btu/h | 6000 | 7000 | 7000 | 7000 | 10600 | 17100 |
| COP (DOE H42 - 5°F) | W/W | 1.83 | 2.2 | 2.15 | 2.2 | 2.1 | 2.01 |
| Heating Maximum Capacity (5°F) | Btu/h | 6000 | 7000 | 7000 | 7000 | 10600 | 17100 |

## ELECTRICAL DATA

| **Outdoor Unit** | | **9K** | **12K** | **9K** | **12K** | **18K** | **24K** |
|---|---|---|---|---|---|---|---|
| | | **(115V)** | | **(208/230V)** | | | |
| Minimum Circuit Ampacity (MCA) | A | 17 | 19.5 | 10 | 10 | 15 | 19 |
| Maximum Overcurrent Protection Ampacity (MOPA) | A | 20 | 20 | 15 | 15 | 20 | 20 |
| Voltage-Phase-Frequency | | 115-1-60 | | 208/230-1-60 | | | |
| Max – Min Voltage Range | | 127-104 | | 253-187 | | | |
| **Cooling** | | | | | | | |
| Running current | (A) | 9.4 | 14.1 | 3.7 | 5.9 | 7.6 | 11.4 |
| Power consumption | (W) | 892 | 1364 | 857 | 1364 | 1717 | 2667 |
| **Heating** | | | | | | | |
| Running current | (A) | 11.6 | 13.1 | 3.9 | 5.3 | 8.2 | 11 |
| Power consumption | (W) | 1083 | 1240 | 896 | 1218 | 1830 | 2530 |

**Manufacturer reserves the right to change, at any time, specifications and designs without notice and without obligations.**

# COOLING PERFORMANCE DATA (HEAT PUMP)

**Table 5 – 9K, 115V Cooling Performance**

| AIRFLOW (CFM) | OUTDOOR DB (°F) | ID WB °F(C) | 60.8°F(16.0°C) | | | | | 64.4°F(18.0°C) | | | | | 67°F(19.4°C) | | | | | 71.6°F(22.0°C) | | | | |
|---|---|---|---|---|---|---|---|---|---|---|---|---|---|---|---|---|---|---|---|---|---|---|
| | | ID DB °F °C | 73.4°F 23.0°C | 77.0°F 25.0°C | 80.0°F 26.7°C | 80.6°F 27.0°C | 84.2°F 29.0°C | 73.4°F 23.0°C | 77.0°F 25.0°C | 80.0°F 26.7°C | 80.6°F 27.0°C | 84.2°F 29.0°C | 73.4°F 23.0°C | 77.0°F 25.0°C | 80.0°F 26.7°C | 80.6°F 27.0°C | 84.2°F 29.0°C | 73.4°F 23.0°C | 77.0°F 25.0°C | 80.0°F 26.7°C | 80.6°F 27.0°C | 84.2°F 29.0°C |
| 129 | 5°F(-15.0°C) | TC | 7129 | 7129 | 7129 | 7129 | 7236 | 7485 | 7484 | 7484 | 7484 | 7484 | 7741 | 7741 | 7740 | 7739 | 7740 | 8232 | 8230 | 8228 | 8227 | 8227 |
| | | S/T | 0.73 | 0.82 | 0.90 | 0.91 | 1.00 | 0.60 | 0.69 | 0.76 | 0.77 | 0.86 | 0.52 | 0.60 | 0.67 | 0.68 | 0.77 | 0.39 | 0.47 | 0.52 | 0.53 | 0.61 |
| | | PI | 0.42 | 0.42 | 0.42 | 0.42 | 0.42 | 0.41 | 0.41 | 0.41 | 0.41 | 0.41 | 0.41 | 0.41 | 0.41 | 0.41 | 0.42 | 0.42 | 0.42 | 0.42 | 0.42 | 0.42 |
| | 14°F(-10.0°C) | TC | 7844 | 7843 | 7842 | 7842 | 7880 | 8256 | 8254 | 8253 | 8252 | 8251 | 8550 | 8548 | 8546 | 8546 | 8544 | 9109 | 9106 | 9104 | 9104 | 9101 |
| | | S/T | 0.73 | 0.81 | 0.89 | 0.90 | 0.99 | 0.60 | 0.68 | 0.75 | 0.76 | 0.85 | 0.52 | 0.60 | 0.66 | 0.68 | 0.76 | 0.39 | 0.47 | 0.51 | 0.53 | 0.60 |
| | | PI | 0.41 | 0.41 | 0.41 | 0.41 | 0.41 | 0.40 | 0.40 | 0.40 | 0.40 | 0.40 | 0.40 | 0.40 | 0.40 | 0.40 | 0.40 | 0.40 | 0.40 | 0.40 | 0.40 | 0.40 |
| | 17°F(-8.3°C) | TC | 8088 | 8086 | 8085 | 8085 | 8201 | 8512 | 8510 | 8508 | 8508 | 8508 | 8816 | 8816 | 8815 | 8815 | 8816 | 9412 | 9409 | 9407 | 9406 | 9407 |
| | | S/T | 0.73 | 0.82 | 0.89 | 0.91 | 1.00 | 0.60 | 0.69 | 0.76 | 0.77 | 0.85 | 0.52 | 0.60 | 0.67 | 0.68 | 0.76 | 0.39 | 0.47 | 0.52 | 0.53 | 0.61 |
| | | PI | 0.40 | 0.40 | 0.40 | 0.40 | 0.40 | 0.40 | 0.40 | 0.40 | 0.40 | 0.40 | 0.40 | 0.40 | 0.40 | 0.40 | 0.40 | 0.40 | 0.40 | 0.40 | 0.40 | 0.40 |
| | 23°F(-5.0°C) | TC | 7967 | 7967 | 7967 | 7973 | 8118 | 8396 | 8394 | 8394 | 8394 | 8395 | 8704 | 8704 | 8702 | 8702 | 8703 | 9298 | 9295 | 9293 | 9292 | 9293 |
| | | S/T | 0.74 | 0.83 | 0.90 | 0.91 | 1.00 | 0.61 | 0.69 | 0.77 | 0.78 | 0.86 | 0.52 | 0.60 | 0.67 | 0.69 | 0.77 | 0.39 | 0.47 | 0.52 | 0.53 | 0.61 |
| | | PI | 0.45 | 0.45 | 0.45 | 0.45 | 0.45 | 0.45 | 0.45 | 0.45 | 0.45 | 0.45 | 0.45 | 0.45 | 0.45 | 0.45 | 0.45 | 0.46 | 0.46 | 0.46 | 0.46 | 0.46 |
| | 35°F(1.7°C) | TC | 7791 | 7790 | 7790 | 7790 | 7801 | 8195 | 8194 | 8193 | 8193 | 8192 | 8480 | 8478 | 8478 | 8478 | 8476 | 9014 | 9012 | 9010 | 9010 | 9010 |
| | | S/T | 0.70 | 0.78 | 0.85 | 0.86 | 0.93 | 0.59 | 0.66 | 0.72 | 0.74 | 0.81 | 0.51 | 0.58 | 0.64 | 0.65 | 0.73 | 0.39 | 0.46 | 0.50 | 0.51 | 0.58 |
| | | PI | 0.51 | 0.51 | 0.51 | 0.51 | 0.51 | 0.53 | 0.53 | 0.53 | 0.53 | 0.53 | 0.56 | 0.56 | 0.56 | 0.56 | 0.56 | 0.60 | 0.60 | 0.60 | 0.60 | 0.60 |
| | 41°F(5.0°C) | TC | 7815 | 7814 | 7814 | 7814 | 7832 | 8217 | 8216 | 8215 | 8215 | 8214 | 8500 | 8499 | 8498 | 8498 | 8497 | 9032 | 9030 | 9028 | 9028 | 9028 |
| | | S/T | 0.71 | 0.79 | 0.86 | 0.87 | 0.95 | 0.59 | 0.67 | 0.73 | 0.74 | 0.82 | 0.51 | 0.59 | 0.65 | 0.66 | 0.73 | 0.39 | 0.46 | 0.51 | 0.52 | 0.59 |
| | | PI | 0.45 | 0.45 | 0.45 | 0.45 | 0.45 | 0.48 | 0.48 | 0.48 | 0.48 | 0.48 | 0.50 | 0.50 | 0.50 | 0.50 | 0.50 | 0.54 | 0.54 | 0.54 | 0.54 | 0.54 |
| | 47°F(8.3°C) | TC | 7838 | 7837 | 7836 | 7836 | 7863 | 8238 | 8237 | 8236 | 8236 | 8235 | 8521 | 8519 | 8518 | 8518 | 8517 | 9050 | 9048 | 9046 | 9046 | 9045 |
| | | S/T | 0.71 | 0.80 | 0.87 | 0.88 | 0.96 | 0.59 | 0.67 | 0.74 | 0.75 | 0.83 | 0.51 | 0.59 | 0.65 | 0.66 | 0.74 | 0.39 | 0.46 | 0.51 | 0.52 | 0.59 |
| | | PI | 0.39 | 0.39 | 0.39 | 0.39 | 0.39 | 0.42 | 0.42 | 0.42 | 0.42 | 0.42 | 0.44 | 0.44 | 0.44 | 0.44 | 0.44 | 0.48 | 0.48 | 0.48 | 0.48 | 0.48 |
| | 50°F(10.0°C) | TC | 7664 | 7665 | 7736 | 7799 | 8088 | 8128 | 8129 | 8132 | 8132 | 8162 | 8464 | 8465 | 8469 | 8469 | 8473 | 9116 | 9112 | 9114 | 9113 | 9121 |
| | | S/T | 0.79 | 0.89 | 0.99 | 1.00 | 1.00 | 0.64 | 0.74 | 0.82 | 0.84 | 0.94 | 0.54 | 0.64 | 0.72 | 0.73 | 0.83 | 0.39 | 0.46 | 0.54 | 0.56 | 0.65 |
| | | PI | 0.45 | 0.45 | 0.45 | 0.45 | 0.45 | 0.45 | 0.45 | 0.45 | 0.45 | 0.45 | 0.45 | 0.45 | 0.45 | 0.45 | 0.45 | 0.45 | 0.45 | 0.45 | 0.45 | 0.45 |
| | 59°F(15.0°C) | TC | 7493 | 7504 | 7652 | 7697 | 7998 | 7969 | 7971 | 7972 | 7973 | 8021 | 8318 | 8316 | 8319 | 8320 | 8322 | 8987 | 8983 | 8984 | 8983 | 8990 |
| | | S/T | 0.80 | 0.91 | 1.00 | 1.00 | 1.00 | 0.65 | 0.75 | 0.84 | 0.86 | 0.96 | 0.54 | 0.65 | 0.73 | 0.75 | 0.85 | 0.39 | 0.47 | 0.55 | 0.56 | 0.66 |
| | | PI | 0.50 | 0.50 | 0.50 | 0.50 | 0.50 | 0.50 | 0.50 | 0.50 | 0.50 | 0.50 | 0.50 | 0.50 | 0.50 | 0.50 | 0.50 | 0.51 | 0.51 | 0.51 | 0.51 | 0.51 |
| | 68°F(20.0°C) | TC | 7327 | 7351 | 7558 | 7605 | 7916 | 7814 | 7815 | 7816 | 7816 | 7910 | 8168 | 8167 | 8170 | 8170 | 8172 | 8851 | 8848 | 8848 | 8848 | 8854 |
| | | S/T | 0.82 | 0.94 | 1.00 | 1.00 | 1.00 | 0.66 | 0.77 | 0.86 | 0.88 | 1.00 | 0.55 | 0.66 | 0.75 | 0.77 | 0.87 | 0.39 | 0.47 | 0.56 | 0.57 | 0.67 |
| | | PI | 0.55 | 0.55 | 0.55 | 0.55 | 0.55 | 0.55 | 0.55 | 0.55 | 0.55 | 0.55 | 0.56 | 0.55 | 0.55 | 0.55 | 0.55 | 0.56 | 0.56 | 0.56 | 0.56 | 0.56 |
| | 77°F(25.0°C) | TC | 7151 | 7186 | 7433 | 7481 | 7803 | 7651 | 7654 | 7655 | 7663 | 7814 | 8017 | 8016 | 8020 | 8021 | 8031 | 8721 | 8717 | 8718 | 8718 | 8728 |
| | | S/T | 0.83 | 0.96 | 1.00 | 1.00 | 1.00 | 0.66 | 0.78 | 0.88 | 0.89 | 1.00 | 0.55 | 0.67 | 0.76 | 0.78 | 0.88 | 0.39 | 0.48 | 0.56 | 0.58 | 0.68 |
| | | PI | 0.60 | 0.60 | 0.60 | 0.60 | 0.60 | 0.60 | 0.60 | 0.60 | 0.60 | 0.60 | 0.61 | 0.61 | 0.61 | 0.61 | 0.61 | 0.61 | 0.61 | 0.61 | 0.61 | 0.61 |
| | 82°F(27.8°C) | TC | 7067 | 7112 | 7385 | 7434 | 7763 | 7574 | 7578 | 7584 | 7591 | 7774 | 7945 | 7946 | 7950 | 7951 | 7965 | 8660 | 8656 | 8658 | 8658 | 8670 |
| | | S/T | 0.84 | 0.97 | 1.00 | 1.00 | 1.00 | 0.67 | 0.79 | 0.88 | 0.90 | 1.00 | 0.56 | 0.67 | 0.77 | 0.78 | 0.89 | 0.39 | 0.48 | 0.57 | 0.58 | 0.68 |
| | | PI | 0.65 | 0.65 | 0.66 | 0.66 | 0.66 | 0.66 | 0.66 | 0.66 | 0.66 | 0.66 | 0.66 | 0.66 | 0.66 | 0.66 | 0.66 | 0.67 | 0.67 | 0.67 | 0.67 | 0.67 |
| | 86°F(30.0°C) | TC | 7018 | 7079 | 7374 | 7424 | 7758 | 7531 | 7534 | 7544 | 7552 | 7769 | 7905 | 7906 | 7910 | 7911 | 7929 | 8627 | 8623 | 8624 | 8626 | 8637 |
| | | S/T | 0.85 | 0.98 | 1.00 | 1.00 | 1.00 | 0.67 | 0.80 | 0.89 | 0.91 | 1.00 | 0.56 | 0.68 | 0.77 | 0.79 | 0.90 | 0.39 | 0.48 | 0.57 | 0.59 | 0.69 |
| | | PI | 0.73 | 0.73 | 0.74 | 0.74 | 0.74 | 0.74 | 0.74 | 0.74 | 0.74 | 0.74 | 0.74 | 0.74 | 0.74 | 0.74 | 0.74 | 0.75 | 0.75 | 0.75 | 0.75 | 0.75 |
| | 95°F(35.0°C) | TC | 7014 | 7014 | 7015 | 7023 | 7203 | 7484 | 7482 | 7482 | 7482 | 7483 | 7823 | 7822 | 7820 | 7820 | 7821 | 8477 | 8474 | 8472 | 8472 | 8472 |
| | | S/T | 0.74 | 0.83 | 0.91 | 0.92 | 1.00 | 0.61 | 0.69 | 0.77 | 0.78 | 0.87 | 0.52 | 0.60 | 0.67 | 0.69 | 0.77 | 0.39 | 0.47 | 0.52 | 0.53 | 0.61 |
| | | PI | 0.88 | 0.88 | 0.88 | 0.88 | 0.89 | 0.90 | 0.90 | 0.90 | 0.90 | 0.90 | 0.92 | 0.92 | 0.92 | 0.92 | 0.92 | 0.96 | 0.96 | 0.96 | 0.96 | 0.96 |
| | 104°F(40.0°C) | TC | 6330 | 6330 | 6341 | 6350 | 6562 | 6753 | 6751 | 6751 | 6751 | 6752 | 7058 | 7057 | 7056 | 7056 | 7057 | 7647 | 7644 | 7642 | 7642 | 7642 |
| | | S/T | 0.75 | 0.85 | 0.93 | 0.95 | 1.00 | 0.61 | 0.71 | 0.78 | 0.80 | 0.89 | 0.52 | 0.61 | 0.69 | 0.70 | 0.79 | 0.39 | 0.45 | 0.52 | 0.54 | 0.62 |
| | | PI | 0.90 | 0.90 | 0.90 | 0.90 | 0.91 | 0.93 | 0.93 | 0.93 | 0.93 | 0.93 | 0.95 | 0.95 | 0.95 | 0.95 | 0.95 | 0.98 | 0.98 | 0.98 | 0.98 | 0.98 |
| | 110°F(43.0°C) | TC | 5881 | 5890 | 6022 | 6061 | 6316 | 6297 | 6297 | 6298 | 6298 | 6334 | 6597 | 6596 | 6597 | 6597 | 6599 | 7176 | 7173 | 7172 | 7173 | 7172 |
| | | S/T | 0.80 | 0.91 | 1.00 | 1.00 | 1.00 | 0.64 | 0.75 | 0.84 | 0.86 | 0.96 | 0.54 | 0.65 | 0.73 | 0.75 | 0.85 | 0.39 | 0.47 | 0.55 | 0.56 | 0.66 |
| | | PI | 0.92 | 0.92 | 0.93 | 0.93 | 0.94 | 0.94 | 0.94 | 0.94 | 0.94 | 0.94 | 0.96 | 0.96 | 0.96 | 0.96 | 0.96 | 0.99 | 0.99 | 0.99 | 0.99 | 0.99 |
| | 115°F(46.0°C) | TC | 4699 | 4717 | 4879 | 4911 | 5126 | 5041 | 5041 | 5042 | 5042 | 5133 | 5287 | 5287 | 5288 | 5289 | 5289 | 5762 | 5760 | 5759 | 5759 | 5762 |
| | | S/T | 0.83 | 0.95 | 1.00 | 1.00 | 1.00 | 0.66 | 0.77 | 0.87 | 0.89 | 1.00 | 0.55 | 0.66 | 0.75 | 0.77 | 0.88 | 0.39 | 0.47 | 0.56 | 0.57 | 0.67 |
| | | PI | 0.77 | 0.77 | 0.78 | 0.78 | 0.79 | 0.79 | 0.79 | 0.79 | 0.79 | 0.79 | 0.80 | 0.80 | 0.80 | 0.80 | 0.80 | 0.82 | 0.82 | 0.82 | 0.82 | 0.82 |
| | 122°F(50.0°C) | TC | 3117 | 3251 | 3394 | 3419 | 3588 | 3361 | 3362 | 3391 | 3424 | 3593 | 3543 | 3544 | 3544 | 3544 | 3597 | 3893 | 3891 | 3894 | 3894 | 3895 |
| | | S/T | 0.93 | 1.00 | 1.00 | 1.00 | 1.00 | 0.72 | 0.86 | 0.99 | 1.00 | 1.00 | 0.59 | 0.73 | 0.84 | 0.86 | 1.00 | 0.39 | 0.50 | 0.61 | 0.62 | 0.75 |
| | | PI | 0.57 | 0.58 | 0.58 | 0.58 | 0.59 | 0.58 | 0.58 | 0.58 | 0.58 | 0.59 | 0.59 | 0.59 | 0.59 | 0.59 | 0.59 | 0.60 | 0.60 | 0.60 | 0.60 | 0.60 |

## Table 5 – 9K, 115V Cooling Performance (Continued)

| AIRFLOW (CFM) | OUTDOOR DB (°F) | ID WB °F(C) | 60.8°F(16.0°C) | | | | | 64.4°F(18.0°C) | | | | | 67°F(19.4°C) | | | | | 71.6°F(22.0°C) | | | | |
|---|---|---|---|---|---|---|---|---|---|---|---|---|---|---|---|---|---|---|---|---|---|---|
| | | ID DB °F °C | 73.4°F 23.0°C | 77.0°F 25.0°C | 80.0°F 26.7°C | 80.6°F 27.0°C | 84.2°F 29.0°C | 73.4°F 23.0°C | 77.0°F 25.0°C | 80.0°F 26.7°C | 80.6°F 27.0°C | 84.2°F 29.0°C | 73.4°F 23.0°C | 77.0°F 25.0°C | 80.0°F 26.7°C | 80.6°F 27.0°C | 84.2°F 29.0°C | 73.4°F 23.0°C | 77.0°F 25.0°C | 80.0°F 26.7°C | 80.6°F 27.0°C | 84.2°F 29.0°C |
| 171 | 5°F(-15.0°C) | TC | 7727 | 7727 | 7752 | 7763 | 7990 | 8103 | 8103 | 8104 | 8104 | 8114 | 8373 | 8372 | 8373 | 8373 | 8375 | 8887 | 8885 | 8885 | 8885 | 8885 |
| | | S/T | 0.76 | 0.86 | 0.94 | 0.96 | 1.00 | 0.62 | 0.72 | 0.80 | 0.81 | 0.90 | 0.53 | 0.62 | 0.70 | 0.72 | 0.81 | 0.39 | 0.46 | 0.54 | 0.55 | 0.64 |
| | | PI | 0.43 | 0.43 | 0.43 | 0.43 | 0.43 | 0.43 | 0.43 | 0.43 | 0.43 | 0.43 | 0.44 | 0.44 | 0.44 | 0.44 | 0.44 | 0.44 | 0.44 | 0.44 | 0.44 | 0.44 |
| | 14°F(-10.0°C) | TC | 8506 | 8505 | 8503 | 8503 | 8744 | 8941 | 8938 | 8936 | 8935 | 8932 | 9252 | 9249 | 9245 | 9245 | 9240 | 9842 | 9839 | 9835 | 9835 | 9829 |
| | | S/T | 0.75 | 0.85 | 0.93 | 0.95 | 1.00 | 0.62 | 0.71 | 0.79 | 0.80 | 0.89 | 0.53 | 0.62 | 0.69 | 0.71 | 0.79 | 0.39 | 0.46 | 0.53 | 0.54 | 0.63 |
| | | PI | 0.43 | 0.43 | 0.43 | 0.43 | 0.42 | 0.42 | 0.42 | 0.42 | 0.42 | 0.42 | 0.42 | 0.42 | 0.42 | 0.42 | 0.42 | 0.42 | 0.42 | 0.42 | 0.42 | 0.42 |
| | 17°F(-8.3°C) | TC | 8764 | 8762 | 8785 | 8797 | 9061 | 9212 | 9209 | 9211 | 9211 | 9221 | 9535 | 9535 | 9536 | 9537 | 9540 | 10160 | 10157 | 10158 | 10158 | 10160 |
| | | S/T | 0.76 | 0.86 | 0.94 | 0.96 | 1.00 | 0.62 | 0.72 | 0.80 | 0.81 | 0.90 | 0.53 | 0.62 | 0.70 | 0.71 | 0.80 | 0.39 | 0.46 | 0.53 | 0.55 | 0.63 |
| | | PI | 0.42 | 0.42 | 0.42 | 0.42 | 0.42 | 0.42 | 0.42 | 0.42 | 0.42 | 0.42 | 0.42 | 0.42 | 0.42 | 0.42 | 0.42 | 0.42 | 0.42 | 0.42 | 0.42 | 0.42 |
| | 23°F(-5.0°C) | TC | 8635 | 8636 | 8671 | 8687 | 8972 | 9088 | 9088 | 9090 | 9090 | 9105 | 9414 | 9414 | 9415 | 9415 | 9417 | 10038 | 10035 | 10035 | 10035 | 10036 |
| | | S/T | 0.77 | 0.87 | 0.95 | 0.97 | 1.00 | 0.62 | 0.72 | 0.80 | 0.82 | 0.91 | 0.53 | 0.63 | 0.71 | 0.72 | 0.81 | 0.39 | 0.46 | 0.54 | 0.55 | 0.64 |
| | | PI | 0.47 | 0.47 | 0.47 | 0.47 | 0.47 | 0.47 | 0.47 | 0.47 | 0.47 | 0.47 | 0.47 | 0.47 | 0.47 | 0.47 | 0.47 | 0.48 | 0.48 | 0.48 | 0.48 | 0.48 |
| | 35°F(1.7°C) | TC | 8458 | 8458 | 8458 | 8458 | 8567 | 8879 | 8877 | 8876 | 8876 | 8877 | 9174 | 9173 | 9172 | 9172 | 9171 | 9725 | 9723 | 9721 | 9721 | 9720 |
| | | S/T | 0.73 | 0.81 | 0.89 | 0.90 | 1.00 | 0.60 | 0.68 | 0.76 | 0.77 | 0.85 | 0.52 | 0.60 | 0.67 | 0.68 | 0.76 | 0.39 | 0.47 | 0.52 | 0.53 | 0.60 |
| | | PI | 0.53 | 0.53 | 0.53 | 0.53 | 0.54 | 0.56 | 0.56 | 0.56 | 0.56 | 0.56 | 0.59 | 0.59 | 0.59 | 0.59 | 0.59 | 0.64 | 0.64 | 0.64 | 0.64 | 0.64 |
| | 41°F(5.0°C) | TC | 8462 | 8482 | 8482 | 8485 | 8624 | 8902 | 8900 | 8899 | 8899 | 8899 | 9196 | 9195 | 9194 | 9193 | 9193 | 9745 | 9743 | 9741 | 9740 | 9740 |
| | | S/T | 0.74 | 0.82 | 0.90 | 0.91 | 1.00 | 0.60 | 0.69 | 0.76 | 0.78 | 0.86 | 0.52 | 0.60 | 0.67 | 0.69 | 0.77 | 0.39 | 0.45 | 0.52 | 0.53 | 0.61 |
| | | PI | 0.47 | 0.47 | 0.47 | 0.47 | 0.48 | 0.50 | 0.50 | 0.50 | 0.50 | 0.50 | 0.52 | 0.52 | 0.52 | 0.52 | 0.52 | 0.57 | 0.57 | 0.57 | 0.57 | 0.57 |
| | 47°F(8.3°C) | TC | 8506 | 8506 | 8506 | 8514 | 8682 | 8924 | 8922 | 8921 | 8921 | 8922 | 9218 | 9217 | 9215 | 9215 | 9215 | 9765 | 9763 | 9761 | 9761 | 9760 |
| | | S/T | 0.74 | 0.83 | 0.91 | 0.92 | 1.00 | 0.61 | 0.70 | 0.77 | 0.78 | 0.87 | 0.52 | 0.61 | 0.68 | 0.69 | 0.78 | 0.39 | 0.45 | 0.52 | 0.53 | 0.62 |
| | | PI | 0.41 | 0.41 | 0.41 | 0.41 | 0.42 | 0.44 | 0.44 | 0.44 | 0.44 | 0.44 | 0.46 | 0.46 | 0.46 | 0.46 | 0.46 | 0.50 | 0.50 | 0.50 | 0.50 | 0.50 |
| | 50°F(10.0°C) | TC | 8301 | 8337 | 8572 | 8620 | 8946 | 8794 | 8799 | 8802 | 8811 | 8958 | 9151 | 9156 | 9162 | 9162 | 9176 | 9833 | 9829 | 9840 | 9843 | 9856 |
| | | S/T | 0.83 | 0.95 | 1.00 | 1.00 | 1.00 | 0.66 | 0.78 | 0.87 | 0.88 | 1.00 | 0.55 | 0.66 | 0.76 | 0.77 | 0.88 | 0.39 | 0.48 | 0.56 | 0.58 | 0.68 |
| | | PI | 0.48 | 0.48 | 0.48 | 0.48 | 0.48 | 0.48 | 0.48 | 0.48 | 0.48 | 0.48 | 0.48 | 0.48 | 0.48 | 0.48 | 0.48 | 0.48 | 0.48 | 0.48 | 0.48 | 0.48 |
| | 59°F(15.0°C) | TC | 8116 | 8174 | 8463 | 8513 | 8852 | 8624 | 8628 | 8641 | 8649 | 8863 | 8991 | 8996 | 9000 | 9000 | 9022 | 9697 | 9693 | 9702 | 9704 | 9715 |
| | | S/T | 0.85 | 0.97 | 1.00 | 1.00 | 1.00 | 0.67 | 0.79 | 0.89 | 0.91 | 1.00 | 0.56 | 0.68 | 0.77 | 0.79 | 0.90 | 0.39 | 0.48 | 0.57 | 0.59 | 0.69 |
| | | PI | 0.53 | 0.53 | 0.53 | 0.53 | 0.53 | 0.53 | 0.53 | 0.53 | 0.53 | 0.53 | 0.53 | 0.53 | 0.53 | 0.53 | 0.53 | 0.53 | 0.53 | 0.53 | 0.53 | 0.53 |
| | 68°F(20.0°C) | TC | 7937 | 8070 | 8363 | 8415 | 8765 | 8456 | 8459 | 8483 | 8493 | 8776 | 8831 | 8836 | 8838 | 8839 | 8873 | 9553 | 9549 | 9558 | 9560 | 9568 |
| | | S/T | 0.87 | 1.00 | 1.00 | 1.00 | 1.00 | 0.69 | 0.81 | 0.91 | 0.93 | 1.00 | 0.57 | 0.69 | 0.79 | 0.81 | 0.93 | 0.39 | 0.49 | 0.58 | 0.60 | 0.71 |
| | | PI | 0.57 | 0.58 | 0.58 | 0.58 | 0.58 | 0.58 | 0.58 | 0.58 | 0.58 | 0.58 | 0.58 | 0.58 | 0.58 | 0.58 | 0.58 | 0.59 | 0.59 | 0.59 | 0.59 | 0.59 |
| | 77°F(25.0°C) | TC | 7745 | 7926 | 8230 | 8284 | 8646 | 8281 | 8285 | 8317 | 8330 | 8657 | 8665 | 8673 | 8677 | 8677 | 8722 | 9408 | 9404 | 9419 | 9421 | 9432 |
| | | S/T | 0.88 | 1.00 | 1.00 | 1.00 | 1.00 | 0.69 | 0.82 | 0.93 | 0.95 | 1.00 | 0.57 | 0.70 | 0.80 | 0.82 | 0.94 | 0.39 | 0.49 | 0.59 | 0.60 | 0.72 |
| | | PI | 0.63 | 0.63 | 0.63 | 0.63 | 0.64 | 0.63 | 0.63 | 0.63 | 0.63 | 0.64 | 0.64 | 0.64 | 0.64 | 0.64 | 0.64 | 0.64 | 0.64 | 0.64 | 0.64 | 0.64 |
| | 82°F(27.8°C) | TC | 7660 | 7869 | 8178 | 8233 | 8603 | 8197 | 8202 | 8241 | 8258 | 8614 | 8587 | 8596 | 8601 | 8601 | 8656 | 9341 | 9343 | 9355 | 9357 | 9369 |
| | | S/T | 0.88 | 1.00 | 1.00 | 1.00 | 1.00 | 0.70 | 0.83 | 0.94 | 0.96 | 1.00 | 0.58 | 0.70 | 0.81 | 0.83 | 0.96 | 0.39 | 0.49 | 0.59 | 0.61 | 0.72 |
| | | PI | 0.69 | 0.69 | 0.69 | 0.69 | 0.70 | 0.69 | 0.69 | 0.69 | 0.69 | 0.70 | 0.70 | 0.70 | 0.70 | 0.70 | 0.70 | 0.70 | 0.70 | 0.70 | 0.70 | 0.70 |
| | 86°F(30.0°C) | TC | 7613 | 7853 | 8168 | 8223 | 8598 | 8151 | 8155 | 8204 | 8226 | 8610 | 8545 | 8554 | 8558 | 8558 | 8624 | 9306 | 9307 | 9320 | 9323 | 9334 |
| | | S/T | 0.90 | 1.00 | 1.00 | 1.00 | 1.00 | 0.71 | 0.84 | 0.96 | 0.98 | 1.00 | 0.58 | 0.71 | 0.82 | 0.84 | 0.97 | 0.39 | 0.50 | 0.60 | 0.61 | 0.73 |
| | | PI | 0.77 | 0.77 | 0.78 | 0.78 | 0.78 | 0.78 | 0.78 | 0.78 | 0.78 | 0.78 | 0.78 | 0.78 | 0.78 | 0.78 | 0.78 | 0.79 | 0.79 | 0.79 | 0.79 | 0.79 |
| | 95°F(35.0°C) | TC | 7606 | 7608 | 7649 | 7669 | 7985 | 8103 | 8102 | 8104 | 8105 | 8119 | 8461 | 8461 | 8460 | 8461 | 8465 | 9150 | 9147 | 9144 | 9149 | 9146 |
| | | S/T | 0.77 | 0.87 | 0.96 | 0.98 | 1.00 | 0.63 | 0.72 | 0.80 | 0.82 | 0.91 | 0.53 | 0.62 | 0.70 | 0.72 | 0.81 | 0.39 | 0.46 | 0.53 | 0.55 | 0.63 |
| | | PI | 0.92 | 0.92 | 0.92 | 0.93 | 0.94 | 0.95 | 0.95 | 0.95 | 0.95 | 0.95 | 0.97 | 0.97 | 0.97 | 0.97 | 0.97 | 1.01 | 1.01 | 1.01 | 1.01 | 1.01 |
| | 104°F(40.0°C) | TC | 6862 | 6863 | 6934 | 6998 | 7273 | 7310 | 7309 | 7312 | 7312 | 7338 | 7633 | 7633 | 7633 | 7634 | 7637 | 8253 | 8250 | 8248 | 8250 | 8250 |
| | | S/T | 0.79 | 0.89 | 0.99 | 1.00 | 1.00 | 0.63 | 0.74 | 0.82 | 0.84 | 0.94 | 0.54 | 0.64 | 0.72 | 0.73 | 0.83 | 0.39 | 0.46 | 0.54 | 0.55 | 0.65 |
| | | PI | 0.94 | 0.94 | 0.95 | 0.95 | 0.97 | 0.97 | 0.97 | 0.97 | 0.97 | 0.97 | 0.99 | 0.99 | 0.99 | 0.99 | 0.99 | 1.04 | 1.03 | 1.03 | 1.03 | 1.03 |
| | 110°F(43.0°C) | TC | 6374 | 6423 | 6670 | 6713 | 7000 | 6815 | 6817 | 6823 | 6829 | 7009 | 7134 | 7134 | 7137 | 7137 | 7150 | 7744 | 7741 | 7741 | 7742 | 7748 |
| | | S/T | 0.85 | 0.97 | 1.00 | 1.00 | 1.00 | 0.67 | 0.79 | 0.89 | 0.91 | 1.00 | 0.56 | 0.68 | 0.77 | 0.79 | 0.90 | 0.39 | 0.48 | 0.57 | 0.59 | 0.69 |
| | | PI | 0.97 | 0.97 | 0.98 | 0.98 | 1.00 | 0.99 | 0.99 | 0.99 | 0.99 | 1.00 | 1.01 | 1.01 | 1.01 | 1.01 | 1.01 | 1.04 | 1.04 | 1.04 | 1.04 | 1.04 |
| | 115°F(46.0°C) | TC | 5093 | 5202 | 5405 | 5441 | 5681 | 5456 | 5458 | 5472 | 5480 | 5689 | 5718 | 5719 | 5721 | 5721 | 5743 | 6220 | 6217 | 6219 | 6221 | 6225 |
| | | S/T | 0.88 | 1.00 | 1.00 | 1.00 | 1.00 | 0.69 | 0.82 | 0.92 | 0.94 | 1.00 | 0.57 | 0.69 | 0.80 | 0.82 | 0.94 | 0.39 | 0.49 | 0.58 | 0.60 | 0.71 |
| | | PI | 0.81 | 0.82 | 0.83 | 0.83 | 0.84 | 0.83 | 0.83 | 0.83 | 0.83 | 0.84 | 0.84 | 0.84 | 0.84 | 0.84 | 0.84 | 0.86 | 0.86 | 0.86 | 0.86 | 0.86 |
| | 122°F(50.0°C) | TC | 3402 | 3594 | 3753 | 3781 | 3970 | 3633 | 3642 | 3758 | 3786 | 3975 | 3827 | 3828 | 3834 | 3838 | 3979 | 4197 | 4198 | 4202 | 4202 | 4201 |
| | | S/T | 1.00 | 1.00 | 1.00 | 1.00 | 1.00 | 0.76 | 0.92 | 1.00 | 1.00 | 1.00 | 0.62 | 0.77 | 0.89 | 0.92 | 1.00 | 0.40 | 0.52 | 0.64 | 0.66 | 0.79 |
| | | PI | 0.61 | 0.61 | 0.62 | 0.62 | 0.62 | 0.61 | 0.61 | 0.62 | 0.62 | 0.62 | 0.62 | 0.62 | 0.62 | 0.62 | 0.62 | 0.63 | 0.63 | 0.63 | 0.63 | 0.63 |

## Table 5 – 9K, 115V Cooling Performance (Continued)

| AIRFLOW (CFM) | OUTDOOR DB (°F) | ID WB °F(C) | 60.8°F(16.0°C) | | | | | 64.4°F(18.0°C) | | | | | 67°F(19.4°C) | | | | | 71.6°F(22.0°C) | | | | |
|---|---|---|---|---|---|---|---|---|---|---|---|---|---|---|---|---|---|---|---|---|---|---|
| | | ID DB °F °C | 73.4°F 23.0°C | 77.0°F 25.0°C | 80.0°F 26.7°C | 80.6°F 27.0°C | 84.2°F 29.0°C | 73.4°F 23.0°C | 77.0°F 25.0°C | 80.0°F 26.7°C | 80.6°F 27.0°C | 84.2°F 29.0°C | 73.4°F 23.0°C | 77.0°F 25.0°C | 80.0°F 26.7°C | 80.6°F 27.0°C | 84.2°F 29.0°C | 73.4°F 23.0°C | 77.0°F 25.0°C | 80.0°F 26.7°C | 80.6°F 27.0°C | 84.2°F 29.0°C |
| 206 | 5°F(-15.0°C) | TC | 8371 | 8379 | 8492 | 8531 | 8792 | 8769 | 8771 | 8772 | 8772 | 8815 | 9056 | 9056 | 9058 | 9058 | 9059 | 9597 | 9595 | 9595 | 9595 | 9601 |
| | | S/T | 0.79 | 0.90 | 1.00 | 1.00 | 1.00 | 0.64 | 0.75 | 0.84 | 0.85 | 0.96 | 0.54 | 0.65 | 0.73 | 0.75 | 0.85 | 0.39 | 0.47 | 0.55 | 0.57 | 0.66 |
| | | PI | 0.46 | 0.46 | 0.46 | 0.46 | 0.46 | 0.46 | 0.46 | 0.46 | 0.46 | 0.46 | 0.46 | 0.46 | 0.46 | 0.46 | 0.46 | 0.47 | 0.47 | 0.47 | 0.47 | 0.47 |
| | 14°F(-10.0°C) | TC | 9217 | 9214 | 9252 | 9333 | 9622 | 9680 | 9674 | 9670 | 9669 | 9664 | 10014 | 10010 | 10002 | 10001 | 9992 | 10644 | 10641 | 10633 | 10631 | 10614 |
| | | S/T | 0.78 | 0.89 | 0.99 | 1.00 | 1.00 | 0.64 | 0.74 | 0.82 | 0.84 | 0.94 | 0.54 | 0.64 | 0.72 | 0.74 | 0.83 | 0.39 | 0.47 | 0.55 | 0.56 | 0.65 |
| | | PI | 0.45 | 0.45 | 0.45 | 0.45 | 0.45 | 0.45 | 0.45 | 0.45 | 0.45 | 0.45 | 0.45 | 0.45 | 0.45 | 0.45 | 0.45 | 0.45 | 0.45 | 0.45 | 0.45 | 0.45 |
| | 17°F(-8.3°C) | TC | 9510 | 9512 | 9629 | 9684 | 9996 | 9987 | 9988 | 9990 | 9991 | 10038 | 10306 | 10310 | 10316 | 10317 | 10320 | 10991 | 10988 | 10989 | 10991 | 11001 |
| | | S/T | 0.79 | 0.89 | 1.00 | 1.00 | 1.00 | 0.64 | 0.74 | 0.83 | 0.85 | 0.95 | 0.55 | 0.65 | 0.73 | 0.75 | 0.85 | 0.39 | 0.47 | 0.55 | 0.57 | 0.66 |
| | | PI | 0.44 | 0.44 | 0.44 | 0.44 | 0.44 | 0.44 | 0.44 | 0.44 | 0.44 | 0.44 | 0.44 | 0.44 | 0.44 | 0.44 | 0.44 | 0.45 | 0.45 | 0.45 | 0.45 | 0.45 |
| | 23°F(-5.0°C) | TC | 9355 | 9368 | 9521 | 9567 | 9880 | 9835 | 9838 | 9839 | 9839 | 9898 | 10182 | 10182 | 10185 | 10185 | 10187 | 10839 | 10835 | 10836 | 10837 | 10845 |
| | | S/T | 0.80 | 0.91 | 1.00 | 1.00 | 1.00 | 0.65 | 0.75 | 0.84 | 0.86 | 0.97 | 0.54 | 0.65 | 0.74 | 0.75 | 0.85 | 0.39 | 0.47 | 0.56 | 0.57 | 0.66 |
| | | PI | 0.50 | 0.50 | 0.50 | 0.50 | 0.50 | 0.50 | 0.50 | 0.50 | 0.50 | 0.50 | 0.50 | 0.50 | 0.50 | 0.50 | 0.50 | 0.51 | 0.51 | 0.51 | 0.51 | 0.51 |
| | 35°F(1.7°C) | TC | 9175 | 9175 | 9193 | 9203 | 9440 | 9615 | 9614 | 9614 | 9614 | 9614 | 9924 | 9923 | 9922 | 9922 | 9923 | 10499 | 10496 | 10494 | 10496 | 10494 |
| | | S/T | 0.75 | 0.85 | 0.93 | 0.94 | 1.00 | 0.62 | 0.71 | 0.79 | 0.80 | 0.89 | 0.53 | 0.62 | 0.69 | 0.71 | 0.80 | 0.39 | 0.46 | 0.53 | 0.54 | 0.63 |
| | | PI | 0.56 | 0.56 | 0.56 | 0.56 | 0.58 | 0.60 | 0.60 | 0.60 | 0.60 | 0.60 | 0.62 | 0.62 | 0.62 | 0.62 | 0.62 | 0.68 | 0.68 | 0.68 | 0.68 | 0.68 |
| | 41°F(5.0°C) | TC | 9200 | 9200 | 9226 | 9238 | 9500 | 9639 | 9638 | 9639 | 9639 | 9647 | 9948 | 9947 | 9946 | 9946 | 9947 | 10520 | 10518 | 10516 | 10517 | 10515 |
| | | S/T | 0.76 | 0.86 | 0.94 | 0.96 | 1.00 | 0.62 | 0.72 | 0.80 | 0.81 | 0.90 | 0.53 | 0.62 | 0.70 | 0.71 | 0.81 | 0.39 | 0.46 | 0.53 | 0.55 | 0.64 |
| | | PI | 0.50 | 0.50 | 0.50 | 0.50 | 0.52 | 0.53 | 0.53 | 0.53 | 0.53 | 0.53 | 0.55 | 0.55 | 0.55 | 0.55 | 0.55 | 0.60 | 0.60 | 0.60 | 0.60 | 0.60 |
| | 47°F(8.3°C) | TC | 9225 | 9225 | 9260 | 9276 | 9562 | 9664 | 9662 | 9663 | 9663 | 9677 | 9971 | 9970 | 9970 | 9970 | 9970 | 10544 | 10541 | 10540 | 10540 | 10538 |
| | | S/T | 0.77 | 0.87 | 0.95 | 0.97 | 1.00 | 0.63 | 0.72 | 0.81 | 0.82 | 0.91 | 0.53 | 0.63 | 0.71 | 0.72 | 0.82 | 0.39 | 0.46 | 0.54 | 0.55 | 0.64 |
| | | PI | 0.44 | 0.44 | 0.44 | 0.44 | 0.46 | 0.46 | 0.46 | 0.46 | 0.46 | 0.47 | 0.49 | 0.49 | 0.49 | 0.49 | 0.49 | 0.53 | 0.53 | 0.53 | 0.53 | 0.53 |
| | 50°F(10.0°C) | TC | 8990 | 9137 | 9442 | 9496 | 9860 | 9518 | 9524 | 9554 | 9567 | 9871 | 9893 | 9905 | 9911 | 9912 | 9957 | 10605 | 10611 | 10636 | 10639 | 10653 |
| | | S/T | 0.87 | 1.00 | 1.00 | 1.00 | 1.00 | 0.69 | 0.81 | 0.92 | 0.94 | 1.00 | 0.57 | 0.69 | 0.80 | 0.81 | 0.93 | 0.39 | 0.49 | 0.58 | 0.60 | 0.71 |
| | | PI | 0.51 | 0.51 | 0.51 | 0.51 | 0.51 | 0.51 | 0.51 | 0.51 | 0.51 | 0.51 | 0.51 | 0.51 | 0.51 | 0.51 | 0.51 | 0.50 | 0.50 | 0.50 | 0.50 | 0.50 |
| | 59°F(15.0°C) | TC | 8798 | 9009 | 9326 | 9383 | 9760 | 9334 | 9339 | 9385 | 9403 | 9771 | 9722 | 9732 | 9736 | 9737 | 9801 | 10465 | 10467 | 10488 | 10490 | 10500 |
| | | S/T | 0.88 | 1.00 | 1.00 | 1.00 | 1.00 | 0.70 | 0.83 | 0.94 | 0.97 | 1.00 | 0.58 | 0.71 | 0.81 | 0.83 | 0.96 | 0.39 | 0.50 | 0.59 | 0.61 | 0.73 |
| | | PI | 0.56 | 0.56 | 0.56 | 0.56 | 0.56 | 0.56 | 0.56 | 0.56 | 0.56 | 0.56 | 0.56 | 0.56 | 0.56 | 0.56 | 0.56 | 0.57 | 0.57 | 0.57 | 0.57 | 0.57 |
| | 68°F(20.0°C) | TC | 8614 | 8892 | 9219 | 9278 | 9668 | 9153 | 9156 | 9227 | 9287 | 9678 | 9551 | 9559 | 9562 | 9562 | 9671 | 10313 | 10317 | 10333 | 10335 | 10342 |
| | | S/T | 0.91 | 1.00 | 1.00 | 1.00 | 1.00 | 0.72 | 0.85 | 0.97 | 1.00 | 1.00 | 0.59 | 0.72 | 0.84 | 0.86 | 0.99 | 0.40 | 0.50 | 0.61 | 0.62 | 0.75 |
| | | PI | 0.61 | 0.61 | 0.62 | 0.62 | 0.62 | 0.62 | 0.62 | 0.62 | 0.62 | 0.62 | 0.62 | 0.62 | 0.62 | 0.62 | 0.62 | 0.63 | 0.63 | 0.63 | 0.63 | 0.63 |
| | 77°F(25.0°C) | TC | 8415 | 8738 | 9077 | 9137 | 9541 | 8963 | 8967 | 9070 | 9148 | 9552 | 9372 | 9382 | 9387 | 9398 | 9560 | 10150 | 10159 | 10182 | 10184 | 10195 |
| | | S/T | 0.92 | 1.00 | 1.00 | 1.00 | 1.00 | 0.72 | 0.87 | 0.99 | 1.00 | 1.00 | 0.59 | 0.73 | 0.85 | 0.86 | 1.00 | 0.40 | 0.51 | 0.61 | 0.63 | 0.76 |
| | | PI | 0.67 | 0.67 | 0.67 | 0.67 | 0.68 | 0.67 | 0.67 | 0.67 | 0.67 | 0.68 | 0.68 | 0.68 | 0.68 | 0.68 | 0.68 | 0.68 | 0.68 | 0.68 | 0.68 | 0.68 |
| | 82°F(27.8°C) | TC | 8323 | 8676 | 9022 | 9083 | 9496 | 8873 | 8887 | 9033 | 9094 | 9507 | 9288 | 9300 | 9305 | 9319 | 9516 | 10074 | 10087 | 10112 | 10115 | 10127 |
| | | S/T | 0.94 | 1.00 | 1.00 | 1.00 | 1.00 | 0.73 | 0.87 | 1.00 | 1.00 | 1.00 | 0.60 | 0.74 | 0.86 | 0.87 | 1.00 | 0.40 | 0.51 | 0.62 | 0.63 | 0.76 |
| | | PI | 0.73 | 0.73 | 0.74 | 0.74 | 0.74 | 0.74 | 0.74 | 0.74 | 0.74 | 0.74 | 0.74 | 0.74 | 0.74 | 0.74 | 0.74 | 0.75 | 0.75 | 0.75 | 0.75 | 0.75 |
| | 86°F(30.0°C) | TC | 8266 | 8649 | 9000 | 9062 | 9484 | 8812 | 8830 | 9011 | 9073 | 9492 | 9232 | 9243 | 9258 | 9266 | 9501 | 10026 | 10041 | 10064 | 10067 | 10077 |
| | | S/T | 0.95 | 1.00 | 1.00 | 1.00 | 1.00 | 0.74 | 0.88 | 1.00 | 1.00 | 1.00 | 0.60 | 0.75 | 0.86 | 0.88 | 1.00 | 0.40 | 0.51 | 0.62 | 0.64 | 0.77 |
| | | PI | 0.82 | 0.82 | 0.83 | 0.83 | 0.83 | 0.82 | 0.82 | 0.83 | 0.83 | 0.83 | 0.83 | 0.83 | 0.83 | 0.83 | 0.83 | 0.84 | 0.84 | 0.84 | 0.84 | 0.84 |
| | 95°F(35.0°C) | TC | 8241 | 8256 | 8433 | 8483 | 8816 | 8768 | 8771 | 8774 | 8774 | 8833 | 9147 | 9148 | 9153 | 9153 | 9157 | 9874 | 9871 | 9872 | 9872 | 9879 |
| | | S/T | 0.80 | 0.91 | 1.00 | 1.00 | 1.00 | 0.65 | 0.75 | 0.84 | 0.86 | 0.96 | 0.54 | 0.65 | 0.73 | 0.75 | 0.85 | 0.39 | 0.47 | 0.55 | 0.56 | 0.66 |
| | | PI | 0.98 | 0.98 | 0.99 | 0.99 | 1.01 | 1.01 | 1.01 | 1.01 | 1.01 | 1.01 | 1.03 | 1.03 | 1.03 | 1.03 | 1.03 | 1.07 | 1.07 | 1.07 | 1.07 | 1.07 |
| | 104°F(40.0°C) | TC | 7434 | 7461 | 7676 | 7721 | 8027 | 7910 | 7913 | 7915 | 7915 | 8020 | 8252 | 8253 | 8258 | 8258 | 8261 | 8908 | 8904 | 8906 | 8905 | 8913 |
| | | S/T | 0.82 | 0.94 | 1.00 | 1.00 | 1.00 | 0.66 | 0.77 | 0.86 | 0.88 | 1.00 | 0.55 | 0.66 | 0.75 | 0.77 | 0.87 | 0.39 | 0.47 | 0.56 | 0.58 | 0.67 |
| | | PI | 1.00 | 1.00 | 1.02 | 1.02 | 1.04 | 1.03 | 1.03 | 1.03 | 1.03 | 1.04 | 1.05 | 1.05 | 1.05 | 1.05 | 1.05 | 1.10 | 1.10 | 1.10 | 1.10 | 1.10 |
| | 110°F(43.0°C) | TC | 6905 | 7092 | 7361 | 7409 | 7727 | 7377 | 7379 | 7411 | 7426 | 7736 | 7714 | 7718 | 7721 | 7721 | 7766 | 8361 | 8358 | 8366 | 8367 | 8374 |
| | | S/T | 0.89 | 1.00 | 1.00 | 1.00 | 1.00 | 0.70 | 0.83 | 0.94 | 0.96 | 1.00 | 0.58 | 0.70 | 0.81 | 0.83 | 0.96 | 0.39 | 0.49 | 0.59 | 0.61 | 0.73 |
| | | PI | 1.03 | 1.04 | 1.05 | 1.05 | 1.07 | 1.05 | 1.05 | 1.05 | 1.05 | 1.07 | 1.07 | 1.07 | 1.07 | 1.07 | 1.07 | 1.10 | 1.10 | 1.10 | 1.10 | 1.10 |
| | 115°F(46.0°C) | TC | 5524 | 5732 | 5958 | 5998 | 6265 | 5901 | 5902 | 5953 | 6005 | 6272 | 6182 | 6188 | 6189 | 6189 | 6278 | 6709 | 6706 | 6716 | 6717 | 6721 |
| | | S/T | 0.92 | 1.00 | 1.00 | 1.00 | 1.00 | 0.72 | 0.86 | 0.98 | 1.00 | 1.00 | 0.59 | 0.73 | 0.84 | 0.86 | 1.00 | 0.40 | 0.50 | 0.61 | 0.63 | 0.75 |
| | | PI | 0.86 | 0.87 | 0.88 | 0.88 | 0.89 | 0.88 | 0.88 | 0.88 | 0.88 | 0.89 | 0.89 | 0.89 | 0.89 | 0.89 | 0.89 | 0.91 | 0.91 | 0.91 | 0.91 | 0.91 |
| | 122°F(50.0°C) | TC | 3745 | 3950 | 4125 | 4157 | 4366 | 3918 | 3949 | 4130 | 4161 | 4370 | 4126 | 4126 | 4147 | 4160 | 4374 | 4516 | 4525 | 4527 | 4527 | 4524 |
| | | S/T | 1.00 | 1.00 | 1.00 | 1.00 | 1.00 | 0.80 | 0.98 | 1.00 | 1.00 | 1.00 | 0.64 | 0.81 | 0.95 | 0.98 | 1.00 | 0.41 | 0.54 | 0.67 | 0.69 | 0.84 |
| | | PI | 0.64 | 0.65 | 0.65 | 0.66 | 0.66 | 0.65 | 0.65 | 0.65 | 0.66 | 0.66 | 0.66 | 0.65 | 0.66 | 0.66 | 0.66 | 0.67 | 0.67 | 0.67 | 0.67 | 0.67 |

**Manufacturer reserves the right to change, at any time, specifications and designs without notice and without obligations.**

## Table 5 – 9K, 115V Cooling Performance (Continued)

| AIRFLOW (CFM) | OUTDOOR DB (°F) | ID WB °F(C) | 60.8°F(16.0°C) | | | | | 64.4°F(18.0°C) | | | | | 67°F(19.4°C) | | | | | 71.6°F(22.0°C) | | | | |
|---|---|---|---|---|---|---|---|---|---|---|---|---|---|---|---|---|---|---|---|---|---|---|
| | | ID DB °F °C | 73.4°F 23.0°C | 77.0°F 25.0°C | 80.0°F 26.7°C | 80.6°F 27.0°C | 84.2°F 29.0°C | 73.4°F 23.0°C | 77.0°F 25.0°C | 80.0°F 26.7°C | 80.6°F 27.0°C | 84.2°F 29.0°C | 73.4°F 23.0°C | 77.0°F 25.0°C | 80.0°F 26.7°C | 80.6°F 27.0°C | 84.2°F 29.0°C | 73.4°F 23.0°C | 77.0°F 25.0°C | 80.0°F 26.7°C | 80.6°F 27.0°C | 84.2°F 29.0°C |
| 229 | 5°F(-15.0°C) | TC | 9066 | 9097 | 9305 | 9348 | 9636 | 9491 | 9494 | 9494 | 9504 | 9646 | 9795 | 9797 | 9799 | 9800 | 9813 | 10369 | 10366 | 10372 | 10373 | 10377 |
| | | S/T | 0.82 | 0.94 | 1.00 | 1.00 | 1.00 | 0.66 | 0.78 | 0.87 | 0.88 | 1.00 | 0.56 | 0.67 | 0.76 | 0.78 | 0.88 | 0.39 | 0.48 | 0.57 | 0.59 | 0.69 |
| | | PI | 0.49 | 0.49 | 0.49 | 0.49 | 0.49 | 0.49 | 0.49 | 0.49 | 0.49 | 0.49 | 0.50 | 0.50 | 0.50 | 0.50 | 0.50 | 0.51 | 0.51 | 0.51 | 0.51 | 0.51 |
| | 14°F(-10.0°C) | TC | 9990 | 9985 | 10188 | 10236 | 10554 | 10486 | 10476 | 10469 | 10468 | 10566 | 10845 | 10831 | 10820 | 10819 | 10808 | 11532 | 11528 | 11506 | 11502 | 11477 |
| | | S/T | 0.81 | 0.93 | 1.00 | 1.00 | 1.00 | 0.65 | 0.76 | 0.86 | 0.87 | 1.00 | 0.55 | 0.66 | 0.75 | 0.76 | 0.87 | 0.39 | 0.48 | 0.56 | 0.57 | 0.67 |
| | | PI | 0.48 | 0.48 | 0.48 | 0.48 | 0.48 | 0.48 | 0.48 | 0.48 | 0.48 | 0.48 | 0.48 | 0.48 | 0.48 | 0.48 | 0.48 | 0.48 | 0.48 | 0.48 | 0.48 | 0.48 |
| | 17°F(-8.3°C) | TC | 10273 | 10306 | 10544 | 10596 | 10940 | 10784 | 10788 | 10790 | 10799 | 10952 | 11152 | 11156 | 11161 | 11161 | 11175 | 11860 | 11857 | 11855 | 11858 | 11867 |
| | | S/T | 0.82 | 0.93 | 1.00 | 1.00 | 1.00 | 0.66 | 0.77 | 0.87 | 0.88 | 1.00 | 0.55 | 0.66 | 0.76 | 0.77 | 0.87 | 0.39 | 0.48 | 0.57 | 0.58 | 0.68 |
| | | PI | 0.47 | 0.47 | 0.47 | 0.47 | 0.47 | 0.47 | 0.47 | 0.47 | 0.47 | 0.47 | 0.47 | 0.47 | 0.47 | 0.48 | 0.48 | 0.48 | 0.48 | 0.48 | 0.48 | 0.48 |
| | 23°F(-5.0°C) | TC | 10132 | 10175 | 10438 | 10490 | 10836 | 10645 | 10648 | 10649 | 10663 | 10847 | 11012 | 11016 | 11018 | 11019 | 11037 | 11709 | 11705 | 11714 | 11715 | 11722 |
| | | S/T | 0.83 | 0.95 | 1.00 | 1.00 | 1.00 | 0.66 | 0.78 | 0.88 | 0.89 | 1.00 | 0.56 | 0.67 | 0.76 | 0.78 | 0.89 | 0.39 | 0.48 | 0.57 | 0.59 | 0.69 |
| | | PI | 0.53 | 0.53 | 0.53 | 0.53 | 0.54 | 0.53 | 0.53 | 0.53 | 0.54 | 0.54 | 0.54 | 0.54 | 0.54 | 0.54 | 0.54 | 0.55 | 0.55 | 0.55 | 0.55 | 0.55 |
| | 35°F(1.7°C) | TC | 9944 | 9944 | 10002 | 10030 | 10354 | 10408 | 10408 | 10409 | 10409 | 10437 | 10734 | 10734 | 10734 | 10734 | 10735 | 11339 | 11336 | 11336 | 11335 | 11336 |
| | | S/T | 0.78 | 0.88 | 0.97 | 0.99 | 1.00 | 0.63 | 0.73 | 0.82 | 0.83 | 0.93 | 0.54 | 0.63 | 0.72 | 0.73 | 0.83 | 0.39 | 0.46 | 0.54 | 0.56 | 0.65 |
| | | PI | 0.60 | 0.60 | 0.61 | 0.61 | 0.63 | 0.64 | 0.64 | 0.64 | 0.64 | 0.64 | 0.67 | 0.67 | 0.67 | 0.67 | 0.67 | 0.72 | 0.72 | 0.72 | 0.72 | 0.72 |
| | 41°F(5.0°C) | TC | 9971 | 9971 | 10050 | 10120 | 10419 | 10434 | 10434 | 10435 | 10435 | 10471 | 10760 | 10759 | 10760 | 10760 | 10761 | 11364 | 11361 | 11360 | 11360 | 11361 |
| | | S/T | 0.78 | 0.89 | 0.98 | 1.00 | 1.00 | 0.64 | 0.74 | 0.83 | 0.84 | 0.94 | 0.54 | 0.64 | 0.72 | 0.74 | 0.84 | 0.39 | 0.47 | 0.55 | 0.56 | 0.66 |
| | | PI | 0.53 | 0.53 | 0.54 | 0.54 | 0.57 | 0.57 | 0.57 | 0.57 | 0.57 | 0.57 | 0.59 | 0.59 | 0.59 | 0.59 | 0.59 | 0.65 | 0.65 | 0.65 | 0.65 | 0.65 |
| | 47°F(8.3°C) | TC | 9997 | 10004 | 10138 | 10183 | 10485 | 10461 | 10460 | 10461 | 10460 | 10509 | 10786 | 10785 | 10785 | 10785 | 10785 | 11389 | 11387 | 11386 | 11385 | 11386 |
| | | S/T | 0.79 | 0.90 | 1.00 | 1.00 | 1.00 | 0.64 | 0.75 | 0.84 | 0.85 | 0.96 | 0.54 | 0.65 | 0.73 | 0.75 | 0.85 | 0.39 | 0.47 | 0.55 | 0.57 | 0.67 |
| | | PI | 0.47 | 0.47 | 0.48 | 0.48 | 0.50 | 0.50 | 0.50 | 0.50 | 0.50 | 0.50 | 0.52 | 0.52 | 0.52 | 0.52 | 0.52 | 0.57 | 0.57 | 0.57 | 0.57 | 0.57 |
| | 50°F(10.0°C) | TC | 9750 | 10019 | 10357 | 10417 | 10821 | 10301 | 10307 | 10378 | 10410 | 10831 | 10703 | 10717 | 10722 | 10723 | 10826 | 11440 | 11471 | 11500 | 11504 | 11518 |
| | | S/T | 0.90 | 1.00 | 1.00 | 1.00 | 1.00 | 0.71 | 0.85 | 0.96 | 0.99 | 1.00 | 0.59 | 0.72 | 0.83 | 0.85 | 0.99 | 0.40 | 0.50 | 0.60 | 0.62 | 0.74 |
| | | PI | 0.54 | 0.54 | 0.54 | 0.54 | 0.54 | 0.54 | 0.54 | 0.54 | 0.54 | 0.54 | 0.54 | 0.54 | 0.54 | 0.54 | 0.54 | 0.54 | 0.54 | 0.54 | 0.54 | 0.54 |
| | 59°F(15.0°C) | TC | 9548 | 9883 | 10234 | 10296 | 10715 | 10102 | 10116 | 10231 | 10307 | 10725 | 10519 | 10530 | 10533 | 10549 | 10734 | 11295 | 11318 | 11340 | 11343 | 11352 |
| | | S/T | 0.92 | 1.00 | 1.00 | 1.00 | 1.00 | 0.73 | 0.86 | 1.00 | 1.00 | 1.00 | 0.60 | 0.73 | 0.85 | 0.86 | 1.00 | 0.40 | 0.51 | 0.61 | 0.63 | 0.76 |
| | | PI | 0.60 | 0.60 | 0.60 | 0.60 | 0.60 | 0.60 | 0.60 | 0.60 | 0.60 | 0.60 | 0.60 | 0.60 | 0.60 | 0.60 | 0.60 | 0.61 | 0.61 | 0.61 | 0.61 | 0.61 |
| | 68°F(20.0°C) | TC | 9342 | 9741 | 10102 | 10166 | 10598 | 9890 | 9912 | 10113 | 10177 | 10608 | 10318 | 10326 | 10344 | 10353 | 10617 | 11117 | 11138 | 11156 | 11157 | 11163 |
| | | S/T | 0.95 | 1.00 | 1.00 | 1.00 | 1.00 | 0.74 | 0.89 | 1.00 | 1.00 | 1.00 | 0.61 | 0.75 | 0.87 | 0.89 | 1.00 | 0.40 | 0.51 | 0.63 | 0.65 | 0.78 |
| | | PI | 0.65 | 0.66 | 0.66 | 0.66 | 0.67 | 0.66 | 0.66 | 0.66 | 0.66 | 0.67 | 0.66 | 0.66 | 0.66 | 0.66 | 0.67 | 0.67 | 0.67 | 0.67 | 0.67 | 0.67 |
| | 77°F(25.0°C) | TC | 9130 | 9570 | 9945 | 10011 | 10458 | 9679 | 9710 | 9955 | 10022 | 10469 | 10118 | 10129 | 10155 | 10166 | 10477 | 10928 | 10961 | 10986 | 10989 | 10999 |
| | | S/T | 0.97 | 1.00 | 1.00 | 1.00 | 1.00 | 0.75 | 0.90 | 1.00 | 1.00 | 1.00 | 0.61 | 0.76 | 0.88 | 0.90 | 1.00 | 0.40 | 0.52 | 0.63 | 0.65 | 0.79 |
| | | PI | 0.72 | 0.72 | 0.72 | 0.72 | 0.73 | 0.72 | 0.72 | 0.72 | 0.72 | 0.73 | 0.72 | 0.72 | 0.72 | 0.72 | 0.73 | 0.73 | 0.73 | 0.73 | 0.73 | 0.73 |
| | 82°F(27.8°C) | TC | 9037 | 9499 | 9882 | 9949 | 10404 | 9577 | 9614 | 9890 | 9960 | 10415 | 10022 | 10035 | 10066 | 10079 | 10424 | 10836 | 10877 | 10905 | 10908 | 10920 |
| | | S/T | 0.99 | 1.00 | 1.00 | 1.00 | 1.00 | 0.76 | 0.91 | 1.00 | 1.00 | 1.00 | 0.62 | 0.77 | 0.89 | 0.92 | 1.00 | 0.40 | 0.52 | 0.64 | 0.66 | 0.80 |
| | | PI | 0.78 | 0.79 | 0.79 | 0.79 | 0.79 | 0.79 | 0.79 | 0.79 | 0.79 | 0.79 | 0.79 | 0.79 | 0.79 | 0.79 | 0.79 | 0.80 | 0.80 | 0.80 | 0.80 | 0.80 |
| | 86°F(30.0°C) | TC | 9024 | 9474 | 9862 | 9931 | 10393 | 9517 | 9560 | 9873 | 9942 | 10404 | 9967 | 9979 | 10015 | 10030 | 10413 | 10791 | 10833 | 10858 | 10861 | 10871 |
| | | S/T | 1.00 | 1.00 | 1.00 | 1.00 | 1.00 | 0.77 | 0.93 | 1.00 | 1.00 | 1.00 | 0.62 | 0.78 | 0.91 | 0.93 | 1.00 | 0.40 | 0.52 | 0.64 | 0.66 | 0.81 |
| | | PI | 0.88 | 0.88 | 0.89 | 0.89 | 0.89 | 0.88 | 0.88 | 0.89 | 0.89 | 0.89 | 0.89 | 0.89 | 0.89 | 0.89 | 0.89 | 0.90 | 0.90 | 0.90 | 0.90 | 0.90 |
| | 95°F(35.0°C) | TC | 8926 | 8974 | 9264 | 9319 | 9687 | 9486 | 9492 | 9495 | 9506 | 9700 | 9893 | 9896 | 9902 | 9903 | 9919 | 10661 | 10657 | 10659 | 10662 | 10676 |
| | | S/T | 0.83 | 0.95 | 1.00 | 1.00 | 1.00 | 0.66 | 0.78 | 0.88 | 0.89 | 1.00 | 0.56 | 0.67 | 0.76 | 0.78 | 0.88 | 0.39 | 0.48 | 0.57 | 0.58 | 0.68 |
| | | PI | 1.05 | 1.05 | 1.07 | 1.07 | 1.09 | 1.08 | 1.08 | 1.08 | 1.08 | 1.09 | 1.11 | 1.11 | 1.11 | 1.11 | 1.11 | 1.15 | 1.15 | 1.15 | 1.15 | 1.15 |
| | 104°F(40.0°C) | TC | 8053 | 8126 | 8432 | 8483 | 8821 | 8560 | 8565 | 8580 | 8589 | 8832 | 8925 | 8929 | 8933 | 8934 | 8959 | 9620 | 9616 | 9621 | 9624 | 9634 |
| | | S/T | 0.85 | 0.98 | 1.00 | 1.00 | 1.00 | 0.68 | 0.80 | 0.90 | 0.92 | 1.00 | 0.56 | 0.68 | 0.78 | 0.80 | 0.91 | 0.39 | 0.48 | 0.58 | 0.59 | 0.70 |
| | | PI | 1.07 | 1.08 | 1.10 | 1.10 | 1.12 | 1.11 | 1.11 | 1.11 | 1.11 | 1.12 | 1.13 | 1.13 | 1.13 | 1.13 | 1.13 | 1.18 | 1.18 | 1.18 | 1.18 | 1.18 |
| | 110°F(43.0°C) | TC | 7500 | 7788 | 8085 | 8137 | 8490 | 7985 | 7987 | 8076 | 8147 | 8499 | 8344 | 8351 | 8353 | 8359 | 8506 | 9031 | 9032 | 9046 | 9047 | 9052 |
| | | S/T | 0.92 | 1.00 | 1.00 | 1.00 | 1.00 | 0.72 | 0.87 | 0.99 | 1.00 | 1.00 | 0.60 | 0.73 | 0.85 | 0.86 | 1.00 | 0.40 | 0.51 | 0.61 | 0.63 | 0.76 |
| | | PI | 1.10 | 1.12 | 1.13 | 1.13 | 1.15 | 1.13 | 1.13 | 1.13 | 1.13 | 1.15 | 1.15 | 1.15 | 1.14 | 1.15 | 1.15 | 1.18 | 1.18 | 1.18 | 1.18 | 1.18 |
| | 115°F(46.0°C) | TC | 6004 | 6293 | 6542 | 6591 | 6881 | 6385 | 6398 | 6549 | 6599 | 6888 | 6683 | 6687 | 6696 | 6702 | 6894 | 7246 | 7251 | 7261 | 7262 | 7265 |
| | | S/T | 0.96 | 1.00 | 1.00 | 1.00 | 1.00 | 0.75 | 0.89 | 1.00 | 1.00 | 1.00 | 0.61 | 0.75 | 0.87 | 0.90 | 1.00 | 0.40 | 0.52 | 0.63 | 0.65 | 0.78 |
| | | PI | 0.92 | 0.94 | 0.95 | 0.95 | 0.96 | 0.94 | 0.94 | 0.95 | 0.95 | 0.96 | 0.96 | 0.96 | 0.96 | 0.96 | 0.96 | 0.98 | 0.98 | 0.98 | 0.98 | 0.98 |
| | 122°F(50.0°C) | TC | 4063 | 4287 | 4479 | 4512 | 4740 | 4192 | 4291 | 4484 | 4517 | 4744 | 4415 | 4413 | 4487 | 4521 | 4747 | 4821 | 4839 | 4840 | 4840 | 4846 |
| | | S/T | 1.00 | 1.00 | 1.00 | 1.00 | 1.00 | 0.84 | 1.00 | 1.00 | 1.00 | 1.00 | 0.67 | 0.85 | 1.00 | 1.00 | 1.00 | 0.41 | 0.55 | 0.69 | 0.72 | 0.88 |
| | | PI | 0.69 | 0.70 | 0.70 | 0.70 | 0.71 | 0.69 | 0.70 | 0.70 | 0.70 | 0.71 | 0.70 | 0.70 | 0.70 | 0.70 | 0.71 | 0.72 | 0.71 | 0.71 | 0.71 | 0.71 |

## Table 6 – 12K, 115V Cooling Performance

| AIRFLOW (CFM) | OUTDOOR DB (°F) | ID WB °F(C) | 60.8°F(16.0°C) | | | | | 64.4°F(18.0°C) | | | | | 67°F(19.4°C) | | | | | 71.6°F(22.0°C) | | | | |
|---|---|---|---|---|---|---|---|---|---|---|---|---|---|---|---|---|---|---|---|---|---|---|
| | | ID DB °F °C | 73.4°F 23.0°C | 77.0°F 25.0°C | 80.0°F 26.7°C | 80.6°F 27.0°C | 84.2°F 29.0°C | 73.4°F 23.0°C | 77.0°F 25.0°C | 80.0°F 26.7°C | 80.6°F 27.0°C | 84.2°F 29.0°C | 73.4°F 23.0°C | 77.0°F 25.0°C | 80.0°F 26.7°C | 80.6°F 27.0°C | 84.2°F 29.0°C | 73.4°F 23.0°C | 77.0°F 25.0°C | 80.0°F 26.7°C | 80.6°F 27.0°C | 84.2°F 29.0°C |
| 176 | 5°F(-15.0°C) | TC | 9654 | 9654 | 9654 | 9654 | 9798 | 10136 | 10134 | 10134 | 10134 | 10135 | 10483 | 10482 | 10481 | 10480 | 10481 | 11147 | 11144 | 11142 | 11141 | 11141 |
| | | S/T | 0.73 | 0.82 | 0.90 | 0.91 | 1.00 | 0.60 | 0.69 | 0.76 | 0.77 | 0.86 | 0.52 | 0.60 | 0.67 | 0.68 | 0.77 | 0.39 | 0.47 | 0.52 | 0.53 | 0.61 |
| | | PI | 0.54 | 0.54 | 0.54 | 0.54 | 0.54 | 0.54 | 0.54 | 0.54 | 0.54 | 0.54 | 0.54 | 0.54 | 0.54 | 0.54 | 0.54 | 0.54 | 0.54 | 0.54 | 0.54 | 0.54 |
| | 14°F(-10.0°C) | TC | 11320 | 11319 | 11317 | 11317 | 11372 | 11915 | 11912 | 11910 | 11909 | 11907 | 12339 | 12336 | 12333 | 12333 | 12330 | 13146 | 13142 | 13139 | 13138 | 13134 |
| | | S/T | 0.73 | 0.81 | 0.89 | 0.90 | 0.99 | 0.60 | 0.68 | 0.75 | 0.76 | 0.85 | 0.52 | 0.60 | 0.66 | 0.68 | 0.76 | 0.39 | 0.47 | 0.51 | 0.53 | 0.60 |
| | | PI | 0.53 | 0.53 | 0.53 | 0.53 | 0.53 | 0.53 | 0.53 | 0.53 | 0.53 | 0.53 | 0.53 | 0.53 | 0.53 | 0.53 | 0.53 | 0.52 | 0.52 | 0.52 | 0.52 | 0.52 |
| | 17°F(-8.3°C) | TC | 11882 | 11880 | 11878 | 11878 | 12049 | 12505 | 12502 | 12500 | 12499 | 12500 | 12953 | 12953 | 12951 | 12950 | 12952 | 13828 | 13824 | 13820 | 13820 | 13821 |
| | | S/T | 0.73 | 0.82 | 0.89 | 0.91 | 1.00 | 0.60 | 0.69 | 0.76 | 0.77 | 0.85 | 0.52 | 0.60 | 0.67 | 0.68 | 0.76 | 0.39 | 0.47 | 0.52 | 0.53 | 0.61 |
| | | PI | 0.52 | 0.52 | 0.52 | 0.52 | 0.52 | 0.52 | 0.52 | 0.52 | 0.52 | 0.52 | 0.52 | 0.52 | 0.52 | 0.52 | 0.52 | 0.52 | 0.52 | 0.52 | 0.52 | 0.52 |
| | 23°F(-5.0°C) | TC | 11543 | 11543 | 11543 | 11551 | 11762 | 12164 | 12162 | 12162 | 12162 | 12163 | 12611 | 12610 | 12608 | 12608 | 12609 | 13471 | 13467 | 13464 | 13463 | 13463 |
| | | S/T | 0.74 | 0.83 | 0.90 | 0.91 | 1.00 | 0.61 | 0.69 | 0.77 | 0.78 | 0.86 | 0.52 | 0.60 | 0.67 | 0.69 | 0.77 | 0.39 | 0.47 | 0.52 | 0.53 | 0.61 |
| | | PI | 0.57 | 0.57 | 0.57 | 0.57 | 0.57 | 0.57 | 0.57 | 0.57 | 0.57 | 0.57 | 0.58 | 0.58 | 0.58 | 0.58 | 0.58 | 0.58 | 0.58 | 0.58 | 0.58 | 0.58 |
| | 35°F(1.7°C) | TC | 10958 | 10957 | 10956 | 10956 | 10971 | 11525 | 11524 | 11523 | 11523 | 11522 | 11927 | 11924 | 11924 | 11923 | 11922 | 12678 | 12675 | 12673 | 12672 | 12671 |
| | | S/T | 0.70 | 0.78 | 0.85 | 0.86 | 0.93 | 0.59 | 0.66 | 0.72 | 0.74 | 0.81 | 0.51 | 0.58 | 0.64 | 0.65 | 0.73 | 0.39 | 0.46 | 0.50 | 0.51 | 0.58 |
| | | PI | 0.62 | 0.62 | 0.62 | 0.62 | 0.62 | 0.66 | 0.66 | 0.66 | 0.66 | 0.66 | 0.68 | 0.68 | 0.68 | 0.68 | 0.68 | 0.74 | 0.74 | 0.74 | 0.74 | 0.74 |
| | 41°F(5.0°C) | TC | 10611 | 10610 | 10609 | 10609 | 10634 | 11157 | 11155 | 11154 | 11154 | 11153 | 11542 | 11540 | 11539 | 11539 | 11537 | 12264 | 12261 | 12259 | 12259 | 12258 |
| | | S/T | 0.71 | 0.79 | 0.86 | 0.87 | 0.95 | 0.59 | 0.67 | 0.73 | 0.74 | 0.82 | 0.51 | 0.59 | 0.65 | 0.66 | 0.73 | 0.39 | 0.46 | 0.51 | 0.52 | 0.59 |
| | | PI | 0.51 | 0.51 | 0.51 | 0.51 | 0.51 | 0.54 | 0.54 | 0.54 | 0.54 | 0.54 | 0.56 | 0.56 | 0.56 | 0.56 | 0.56 | 0.61 | 0.61 | 0.61 | 0.61 | 0.61 |
| | 47°F(8.3°C) | TC | 10262 | 10261 | 10260 | 10260 | 10296 | 10786 | 10785 | 10783 | 10783 | 10783 | 11157 | 11154 | 11154 | 11153 | 11152 | 11850 | 11847 | 11845 | 11844 | 11843 |
| | | S/T | 0.71 | 0.80 | 0.87 | 0.88 | 0.96 | 0.59 | 0.67 | 0.74 | 0.75 | 0.83 | 0.51 | 0.59 | 0.65 | 0.66 | 0.74 | 0.39 | 0.46 | 0.51 | 0.52 | 0.59 |
| | | PI | 0.40 | 0.40 | 0.40 | 0.40 | 0.40 | 0.42 | 0.42 | 0.42 | 0.42 | 0.42 | 0.44 | 0.44 | 0.44 | 0.44 | 0.44 | 0.49 | 0.48 | 0.48 | 0.48 | 0.48 |
| | 50°F(10.0°C) | TC | 9988 | 9990 | 10082 | 10164 | 10541 | 10592 | 10595 | 10598 | 10598 | 10637 | 11031 | 11032 | 11037 | 11038 | 11042 | 11880 | 11876 | 11878 | 11877 | 11887 |
| | | S/T | 0.79 | 0.89 | 0.99 | 1.00 | 1.00 | 0.64 | 0.74 | 0.82 | 0.84 | 0.94 | 0.54 | 0.64 | 0.72 | 0.73 | 0.83 | 0.39 | 0.46 | 0.54 | 0.56 | 0.65 |
| | | PI | 0.46 | 0.46 | 0.46 | 0.46 | 0.46 | 0.46 | 0.46 | 0.46 | 0.46 | 0.46 | 0.46 | 0.46 | 0.46 | 0.46 | 0.46 | 0.46 | 0.46 | 0.46 | 0.46 | 0.46 |
| | 59°F(15.0°C) | TC | 9624 | 9639 | 9828 | 9886 | 10272 | 10236 | 10238 | 10240 | 10240 | 10303 | 10684 | 10681 | 10685 | 10686 | 10689 | 11543 | 11538 | 11539 | 11538 | 11547 |
| | | S/T | 0.80 | 0.91 | 1.00 | 1.00 | 1.00 | 0.65 | 0.75 | 0.84 | 0.86 | 0.96 | 0.54 | 0.65 | 0.73 | 0.75 | 0.85 | 0.39 | 0.47 | 0.55 | 0.56 | 0.66 |
| | | PI | 0.50 | 0.50 | 0.50 | 0.50 | 0.50 | 0.50 | 0.50 | 0.50 | 0.50 | 0.50 | 0.50 | 0.50 | 0.50 | 0.50 | 0.50 | 0.50 | 0.50 | 0.50 | 0.50 | 0.50 |
| | 68°F(20.0°C) | TC | 9268 | 9298 | 9561 | 9620 | 10013 | 9884 | 9885 | 9887 | 9887 | 10006 | 10332 | 10330 | 10334 | 10335 | 10337 | 11196 | 11192 | 11192 | 11192 | 11200 |
| | | S/T | 0.82 | 0.94 | 1.00 | 1.00 | 1.00 | 0.66 | 0.77 | 0.86 | 0.88 | 1.00 | 0.55 | 0.66 | 0.75 | 0.77 | 0.87 | 0.39 | 0.47 | 0.56 | 0.57 | 0.67 |
| | | PI | 0.54 | 0.54 | 0.54 | 0.54 | 0.54 | 0.54 | 0.54 | 0.54 | 0.54 | 0.54 | 0.54 | 0.54 | 0.54 | 0.54 | 0.54 | 0.55 | 0.55 | 0.55 | 0.55 | 0.55 |
| | 77°F(25.0°C) | TC | 8900 | 8944 | 9251 | 9312 | 9713 | 9523 | 9527 | 9528 | 9538 | 9727 | 9978 | 9978 | 9983 | 9984 | 9996 | 10855 | 10850 | 10851 | 10851 | 10864 |
| | | S/T | 0.83 | 0.96 | 1.00 | 1.00 | 1.00 | 0.66 | 0.78 | 0.88 | 0.89 | 1.00 | 0.55 | 0.67 | 0.76 | 0.78 | 0.88 | 0.39 | 0.48 | 0.56 | 0.58 | 0.68 |
| | | PI | 0.58 | 0.58 | 0.58 | 0.58 | 0.59 | 0.58 | 0.58 | 0.58 | 0.58 | 0.59 | 0.59 | 0.59 | 0.59 | 0.59 | 0.59 | 0.59 | 0.59 | 0.59 | 0.59 | 0.59 |
| | 82°F(27.8°C) | TC | 8958 | 9016 | 9361 | 9424 | 9840 | 9601 | 9606 | 9614 | 9622 | 9854 | 10072 | 10072 | 10078 | 10079 | 10096 | 10978 | 10973 | 10975 | 10975 | 10990 |
| | | S/T | 0.84 | 0.97 | 1.00 | 1.00 | 1.00 | 0.67 | 0.79 | 0.88 | 0.90 | 1.00 | 0.56 | 0.67 | 0.77 | 0.78 | 0.89 | 0.39 | 0.48 | 0.57 | 0.58 | 0.68 |
| | | PI | 0.68 | 0.68 | 0.68 | 0.69 | 0.69 | 0.69 | 0.69 | 0.69 | 0.69 | 0.69 | 0.69 | 0.69 | 0.69 | 0.69 | 0.69 | 0.70 | 0.70 | 0.70 | 0.70 | 0.70 |
| | 86°F(30.0°C) | TC | 9333 | 9414 | 9806 | 9873 | 10317 | 10015 | 10019 | 10033 | 10043 | 10331 | 10513 | 10514 | 10520 | 10520 | 10544 | 11473 | 11467 | 11469 | 11472 | 11486 |
| | | S/T | 0.85 | 0.98 | 1.00 | 1.00 | 1.00 | 0.67 | 0.80 | 0.89 | 0.91 | 1.00 | 0.56 | 0.68 | 0.77 | 0.79 | 0.90 | 0.39 | 0.48 | 0.57 | 0.59 | 0.69 |
| | | PI | 0.86 | 0.86 | 0.86 | 0.86 | 0.87 | 0.87 | 0.87 | 0.87 | 0.87 | 0.87 | 0.87 | 0.87 | 0.87 | 0.87 | 0.87 | 0.88 | 0.88 | 0.88 | 0.88 | 0.88 |
| | 95°F(35.0°C) | TC | 10327 | 10327 | 10328 | 10339 | 10604 | 11019 | 11016 | 11015 | 11015 | 11017 | 11517 | 11516 | 11514 | 11514 | 11514 | 12481 | 12477 | 12473 | 12473 | 12472 |
| | | S/T | 0.74 | 0.83 | 0.91 | 0.92 | 1.00 | 0.61 | 0.69 | 0.77 | 0.78 | 0.87 | 0.52 | 0.60 | 0.67 | 0.69 | 0.77 | 0.39 | 0.47 | 0.52 | 0.53 | 0.61 |
| | | PI | 1.21 | 1.21 | 1.21 | 1.21 | 1.23 | 1.25 | 1.25 | 1.25 | 1.25 | 1.25 | 1.28 | 1.28 | 1.28 | 1.28 | 1.28 | 1.33 | 1.33 | 1.33 | 1.33 | 1.33 |
| | 104°F(40.0°C) | TC | 8897 | 8897 | 8913 | 8925 | 9223 | 9491 | 9489 | 9489 | 9489 | 9491 | 9920 | 9919 | 9917 | 9917 | 9918 | 10748 | 10744 | 10742 | 10741 | 10741 |
| | | S/T | 0.75 | 0.85 | 0.93 | 0.95 | 1.00 | 0.61 | 0.71 | 0.78 | 0.80 | 0.89 | 0.52 | 0.61 | 0.69 | 0.70 | 0.79 | 0.39 | 0.45 | 0.52 | 0.54 | 0.62 |
| | | PI | 1.12 | 1.12 | 1.12 | 1.12 | 1.13 | 1.15 | 1.15 | 1.15 | 1.15 | 1.15 | 1.17 | 1.17 | 1.17 | 1.17 | 1.17 | 1.22 | 1.22 | 1.22 | 1.22 | 1.22 |
| | 110°F(43.0°C) | TC | 7987 | 7999 | 8178 | 8231 | 8578 | 8552 | 8551 | 8553 | 8553 | 8602 | 8959 | 8958 | 8959 | 8960 | 8962 | 9745 | 9741 | 9741 | 9741 | 9740 |
| | | S/T | 0.80 | 0.91 | 1.00 | 1.00 | 1.00 | 0.64 | 0.75 | 0.84 | 0.86 | 0.96 | 0.54 | 0.65 | 0.73 | 0.75 | 0.85 | 0.39 | 0.47 | 0.55 | 0.56 | 0.66 |
| | | PI | 1.07 | 1.07 | 1.08 | 1.08 | 1.09 | 1.09 | 1.09 | 1.09 | 1.09 | 1.10 | 1.11 | 1.11 | 1.11 | 1.11 | 1.11 | 1.15 | 1.15 | 1.15 | 1.15 | 1.15 |
| | 115°F(46.0°C) | TC | 6675 | 6701 | 6930 | 6975 | 7280 | 7160 | 7161 | 7162 | 7162 | 7291 | 7510 | 7510 | 7512 | 7512 | 7513 | 8185 | 8181 | 8181 | 8180 | 8184 |
| | | S/T | 0.83 | 0.95 | 1.00 | 1.00 | 1.00 | 0.66 | 0.77 | 0.87 | 0.89 | 1.00 | 0.55 | 0.66 | 0.75 | 0.77 | 0.88 | 0.39 | 0.47 | 0.56 | 0.57 | 0.67 |
| | | PI | 0.96 | 0.96 | 0.97 | 0.97 | 0.98 | 0.98 | 0.98 | 0.98 | 0.98 | 0.98 | 0.99 | 0.99 | 0.99 | 0.99 | 0.99 | 1.02 | 1.02 | 1.02 | 1.02 | 1.02 |
| | 122°F(50.0°C) | TC | 4909 | 5121 | 5346 | 5385 | 5652 | 5294 | 5295 | 5341 | 5393 | 5659 | 5580 | 5581 | 5582 | 5581 | 5665 | 6132 | 6129 | 6133 | 6133 | 6135 |
| | | S/T | 0.93 | 1.00 | 1.00 | 1.00 | 1.00 | 0.72 | 0.86 | 0.99 | 1.00 | 1.00 | 0.59 | 0.73 | 0.84 | 0.86 | 1.00 | 0.39 | 0.50 | 0.61 | 0.62 | 0.75 |
| | | PI | 0.81 | 0.81 | 0.82 | 0.82 | 0.83 | 0.82 | 0.82 | 0.82 | 0.82 | 0.83 | 0.83 | 0.83 | 0.83 | 0.83 | 0.83 | 0.84 | 0.84 | 0.84 | 0.84 | 0.84 |

## Table 6 – 12K, 115V Cooling Performance (Continued)

| AIRFLOW (CFM) | OUTDOOR DB (°F) | ID WB °F(C) | 60.8°F(16.0°C) | | | | | 64.4°F(18.0°C) | | | | | 67°F(19.4°C) | | | | | 71.6°F(22.0°C) | | | | |
|---|---|---|---|---|---|---|---|---|---|---|---|---|---|---|---|---|---|---|---|---|---|---|
| | | ID DB °F °C | 73.4°F 23.0°C | 77.0°F 25.0°C | 80.0°F 26.7°C | 80.6°F 27.0°C | 84.2°F 29.0°C | 73.4°F 23.0°C | 77.0°F 25.0°C | 80.0°F 26.7°C | 80.6°F 27.0°C | 84.2°F 29.0°C | 73.4°F 23.0°C | 77.0°F 25.0°C | 80.0°F 26.7°C | 80.6°F 27.0°C | 84.2°F 29.0°C | 73.4°F 23.0°C | 77.0°F 25.0°C | 80.0°F 26.7°C | 80.6°F 27.0°C | 84.2°F 29.0°C |
| 241 | 5°F(-15.0°C) | TC | 9954 | 9954 | 9986 | 10000 | 10292 | 10438 | 10438 | 10439 | 10439 | 10452 | 10786 | 10785 | 10786 | 10786 | 10788 | 11449 | 11446 | 11446 | 11445 | 11446 |
| | | S/T | 0.76 | 0.86 | 0.94 | 0.96 | 1.00 | 0.62 | 0.72 | 0.80 | 0.81 | 0.90 | 0.53 | 0.62 | 0.70 | 0.72 | 0.81 | 0.39 | 0.46 | 0.54 | 0.55 | 0.64 |
| | | PI | 0.54 | 0.54 | 0.54 | 0.54 | 0.54 | 0.54 | 0.54 | 0.54 | 0.54 | 0.54 | 0.54 | 0.54 | 0.54 | 0.54 | 0.54 | 0.55 | 0.55 | 0.55 | 0.55 | 0.55 |
| | 14°F(-10.0°C) | TC | 11678 | 11675 | 11673 | 11673 | 12004 | 12274 | 12271 | 12267 | 12267 | 12263 | 12701 | 12697 | 12692 | 12691 | 12686 | 13512 | 13508 | 13502 | 13502 | 13493 |
| | | S/T | 0.75 | 0.85 | 0.93 | 0.95 | 1.00 | 0.62 | 0.71 | 0.79 | 0.80 | 0.89 | 0.53 | 0.62 | 0.69 | 0.71 | 0.79 | 0.39 | 0.46 | 0.53 | 0.54 | 0.63 |
| | | PI | 0.53 | 0.53 | 0.53 | 0.53 | 0.53 | 0.53 | 0.53 | 0.53 | 0.53 | 0.53 | 0.53 | 0.53 | 0.53 | 0.53 | 0.53 | 0.53 | 0.53 | 0.53 | 0.53 | 0.53 |
| | 17°F(-8.3°C) | TC | 12249 | 12245 | 12277 | 12295 | 12663 | 12875 | 12870 | 12873 | 12874 | 12888 | 13326 | 13326 | 13328 | 13329 | 13333 | 14200 | 14196 | 14197 | 14196 | 14200 |
| | | S/T | 0.76 | 0.86 | 0.94 | 0.96 | 1.00 | 0.62 | 0.72 | 0.80 | 0.81 | 0.90 | 0.53 | 0.62 | 0.70 | 0.71 | 0.80 | 0.39 | 0.46 | 0.53 | 0.55 | 0.63 |
| | | PI | 0.52 | 0.52 | 0.52 | 0.52 | 0.52 | 0.52 | 0.52 | 0.52 | 0.52 | 0.52 | 0.52 | 0.52 | 0.52 | 0.52 | 0.52 | 0.52 | 0.52 | 0.52 | 0.52 | 0.52 |
| | 23°F(-5.0°C) | TC | 11901 | 11903 | 11951 | 11972 | 12366 | 12526 | 12526 | 12528 | 12528 | 12548 | 12975 | 12974 | 12976 | 12976 | 12979 | 13834 | 13830 | 13831 | 13830 | 13832 |
| | | S/T | 0.77 | 0.87 | 0.95 | 0.97 | 1.00 | 0.62 | 0.72 | 0.80 | 0.82 | 0.91 | 0.53 | 0.63 | 0.71 | 0.72 | 0.81 | 0.39 | 0.46 | 0.54 | 0.55 | 0.64 |
| | | PI | 0.57 | 0.57 | 0.57 | 0.57 | 0.57 | 0.57 | 0.57 | 0.57 | 0.57 | 0.57 | 0.58 | 0.58 | 0.58 | 0.58 | 0.58 | 0.58 | 0.58 | 0.58 | 0.58 | 0.58 |
| | 35°F(1.7°C) | TC | 11317 | 11316 | 11316 | 11316 | 11462 | 11879 | 11877 | 11876 | 11876 | 11877 | 12274 | 12273 | 12271 | 12271 | 12270 | 13012 | 13009 | 13006 | 13006 | 13005 |
| | | S/T | 0.73 | 0.81 | 0.89 | 0.90 | 1.00 | 0.60 | 0.68 | 0.76 | 0.77 | 0.85 | 0.52 | 0.60 | 0.67 | 0.68 | 0.76 | 0.39 | 0.47 | 0.52 | 0.53 | 0.60 |
| | | PI | 0.62 | 0.62 | 0.62 | 0.62 | 0.63 | 0.66 | 0.66 | 0.66 | 0.66 | 0.66 | 0.68 | 0.68 | 0.68 | 0.68 | 0.68 | 0.74 | 0.74 | 0.74 | 0.74 | 0.74 |
| | 41°F(5.0°C) | TC | 10929 | 10956 | 10956 | 10959 | 11140 | 11498 | 11495 | 11494 | 11495 | 11495 | 11878 | 11877 | 11875 | 11875 | 11874 | 12587 | 12584 | 12582 | 12581 | 12580 |
| | | S/T | 0.74 | 0.82 | 0.90 | 0.91 | 1.00 | 0.60 | 0.69 | 0.76 | 0.78 | 0.86 | 0.52 | 0.60 | 0.67 | 0.69 | 0.77 | 0.39 | 0.45 | 0.52 | 0.53 | 0.61 |
| | | PI | 0.51 | 0.51 | 0.51 | 0.51 | 0.52 | 0.54 | 0.54 | 0.54 | 0.54 | 0.54 | 0.56 | 0.56 | 0.56 | 0.56 | 0.56 | 0.62 | 0.61 | 0.61 | 0.61 | 0.61 |
| | 47°F(8.3°C) | TC | 10595 | 10595 | 10595 | 10605 | 10814 | 11115 | 11113 | 11112 | 11112 | 11113 | 11482 | 11480 | 11479 | 11478 | 11478 | 12164 | 12161 | 12158 | 12158 | 12157 |
| | | S/T | 0.74 | 0.83 | 0.91 | 0.92 | 1.00 | 0.61 | 0.70 | 0.77 | 0.78 | 0.87 | 0.52 | 0.61 | 0.68 | 0.69 | 0.78 | 0.39 | 0.45 | 0.52 | 0.53 | 0.62 |
| | | PI | 0.40 | 0.40 | 0.40 | 0.40 | 0.41 | 0.43 | 0.43 | 0.43 | 0.43 | 0.43 | 0.44 | 0.44 | 0.44 | 0.44 | 0.44 | 0.48 | 0.48 | 0.48 | 0.48 | 0.48 |
| | 50°F(10.0°C) | TC | 10292 | 10335 | 10627 | 10687 | 11091 | 10902 | 10909 | 10912 | 10923 | 11105 | 11345 | 11351 | 11358 | 11359 | 11375 | 12190 | 12185 | 12200 | 12203 | 12219 |
| | | S/T | 0.83 | 0.95 | 1.00 | 1.00 | 1.00 | 0.66 | 0.78 | 0.87 | 0.88 | 1.00 | 0.55 | 0.66 | 0.76 | 0.77 | 0.88 | 0.39 | 0.48 | 0.56 | 0.58 | 0.68 |
| | | PI | 0.46 | 0.46 | 0.46 | 0.46 | 0.46 | 0.46 | 0.46 | 0.46 | 0.46 | 0.46 | 0.46 | 0.46 | 0.46 | 0.46 | 0.46 | 0.46 | 0.46 | 0.46 | 0.46 | 0.46 |
| | 59°F(15.0°C) | TC | 9917 | 9988 | 10341 | 10402 | 10816 | 10537 | 10542 | 10558 | 10568 | 10830 | 10986 | 10991 | 10997 | 10997 | 11024 | 11848 | 11843 | 11855 | 11857 | 11870 |
| | | S/T | 0.85 | 0.97 | 1.00 | 1.00 | 1.00 | 0.67 | 0.79 | 0.89 | 0.91 | 1.00 | 0.56 | 0.68 | 0.77 | 0.79 | 0.90 | 0.39 | 0.48 | 0.57 | 0.59 | 0.69 |
| | | PI | 0.50 | 0.50 | 0.50 | 0.50 | 0.50 | 0.50 | 0.50 | 0.50 | 0.50 | 0.50 | 0.50 | 0.50 | 0.50 | 0.50 | 0.50 | 0.50 | 0.50 | 0.50 | 0.50 | 0.50 |
| | 68°F(20.0°C) | TC | 9550 | 9710 | 10063 | 10126 | 10547 | 10175 | 10179 | 10207 | 10220 | 10560 | 10626 | 10632 | 10635 | 10636 | 10677 | 11495 | 11490 | 11502 | 11504 | 11513 |
| | | S/T | 0.87 | 1.00 | 1.00 | 1.00 | 1.00 | 0.69 | 0.81 | 0.91 | 0.93 | 1.00 | 0.57 | 0.69 | 0.79 | 0.81 | 0.93 | 0.39 | 0.49 | 0.58 | 0.60 | 0.71 |
| | | PI | 0.54 | 0.54 | 0.54 | 0.54 | 0.54 | 0.54 | 0.54 | 0.54 | 0.54 | 0.54 | 0.54 | 0.54 | 0.54 | 0.54 | 0.54 | 0.55 | 0.55 | 0.55 | 0.55 | 0.55 |
| | 77°F(25.0°C) | TC | 9171 | 9385 | 9744 | 9808 | 10237 | 9805 | 9810 | 9847 | 9863 | 10250 | 10260 | 10269 | 10274 | 10274 | 10327 | 11140 | 11135 | 11152 | 11155 | 11168 |
| | | S/T | 0.88 | 1.00 | 1.00 | 1.00 | 1.00 | 0.69 | 0.82 | 0.93 | 0.95 | 1.00 | 0.57 | 0.70 | 0.80 | 0.82 | 0.94 | 0.39 | 0.49 | 0.59 | 0.60 | 0.72 |
| | | PI | 0.58 | 0.58 | 0.58 | 0.58 | 0.59 | 0.58 | 0.58 | 0.58 | 0.59 | 0.59 | 0.59 | 0.59 | 0.59 | 0.59 | 0.59 | 0.59 | 0.59 | 0.59 | 0.59 | 0.59 |
| | 82°F(27.8°C) | TC | 9237 | 9488 | 9862 | 9928 | 10374 | 9885 | 9890 | 9938 | 9958 | 10387 | 10355 | 10366 | 10371 | 10372 | 10437 | 11264 | 11266 | 11281 | 11284 | 11298 |
| | | S/T | 0.88 | 1.00 | 1.00 | 1.00 | 1.00 | 0.70 | 0.83 | 0.94 | 0.96 | 1.00 | 0.58 | 0.70 | 0.81 | 0.83 | 0.96 | 0.39 | 0.49 | 0.59 | 0.61 | 0.72 |
| | | PI | 0.68 | 0.68 | 0.69 | 0.69 | 0.69 | 0.69 | 0.69 | 0.69 | 0.69 | 0.69 | 0.69 | 0.69 | 0.69 | 0.69 | 0.69 | 0.70 | 0.70 | 0.70 | 0.70 | 0.70 |
| | 86°F(30.0°C) | TC | 9630 | 9934 | 10333 | 10403 | 10878 | 10312 | 10317 | 10379 | 10406 | 10892 | 10810 | 10821 | 10826 | 10827 | 10911 | 11773 | 11774 | 11791 | 11794 | 11808 |
| | | S/T | 0.90 | 1.00 | 1.00 | 1.00 | 1.00 | 0.71 | 0.84 | 0.96 | 0.98 | 1.00 | 0.58 | 0.71 | 0.82 | 0.84 | 0.97 | 0.39 | 0.50 | 0.60 | 0.61 | 0.73 |
| | | PI | 0.86 | 0.86 | 0.87 | 0.87 | 0.87 | 0.87 | 0.87 | 0.87 | 0.87 | 0.87 | 0.87 | 0.87 | 0.87 | 0.87 | 0.87 | 0.88 | 0.88 | 0.88 | 0.88 | 0.88 |
| | 95°F(35.0°C) | TC | 10652 | 10655 | 10713 | 10741 | 11183 | 11349 | 11348 | 11350 | 11351 | 11371 | 11850 | 11849 | 11849 | 11850 | 11855 | 12815 | 12811 | 12807 | 12813 | 12810 |
| | | S/T | 0.77 | 0.87 | 0.96 | 0.98 | 1.00 | 0.63 | 0.72 | 0.80 | 0.82 | 0.91 | 0.53 | 0.62 | 0.70 | 0.72 | 0.81 | 0.39 | 0.46 | 0.53 | 0.55 | 0.63 |
| | | PI | 1.21 | 1.21 | 1.22 | 1.22 | 1.24 | 1.25 | 1.25 | 1.25 | 1.25 | 1.25 | 1.28 | 1.28 | 1.28 | 1.28 | 1.28 | 1.33 | 1.33 | 1.33 | 1.33 | 1.33 |
| | 104°F(40.0°C) | TC | 9175 | 9177 | 9271 | 9356 | 9725 | 9774 | 9773 | 9776 | 9777 | 9812 | 10206 | 10205 | 10206 | 10207 | 10211 | 11035 | 11031 | 11028 | 11031 | 11030 |
| | | S/T | 0.79 | 0.89 | 0.99 | 1.00 | 1.00 | 0.63 | 0.74 | 0.82 | 0.84 | 0.94 | 0.54 | 0.64 | 0.72 | 0.73 | 0.83 | 0.39 | 0.46 | 0.54 | 0.55 | 0.65 |
| | | PI | 1.12 | 1.12 | 1.12 | 1.13 | 1.15 | 1.15 | 1.15 | 1.15 | 1.15 | 1.15 | 1.17 | 1.17 | 1.17 | 1.17 | 1.17 | 1.22 | 1.22 | 1.22 | 1.22 | 1.22 |
| | 110°F(43.0°C) | TC | 8235 | 8298 | 8618 | 8673 | 9043 | 8804 | 8807 | 8815 | 8823 | 9056 | 9217 | 9217 | 9220 | 9221 | 9237 | 10004 | 10001 | 10001 | 10002 | 10010 |
| | | S/T | 0.85 | 0.97 | 1.00 | 1.00 | 1.00 | 0.67 | 0.79 | 0.89 | 0.91 | 1.00 | 0.56 | 0.68 | 0.77 | 0.79 | 0.90 | 0.39 | 0.48 | 0.57 | 0.59 | 0.69 |
| | | PI | 1.07 | 1.07 | 1.08 | 1.09 | 1.10 | 1.09 | 1.09 | 1.09 | 1.09 | 1.10 | 1.11 | 1.11 | 1.11 | 1.11 | 1.11 | 1.15 | 1.15 | 1.15 | 1.15 | 1.15 |
| | 115°F(46.0°C) | TC | 6882 | 7029 | 7303 | 7351 | 7676 | 7372 | 7375 | 7394 | 7405 | 7687 | 7726 | 7728 | 7730 | 7731 | 7760 | 8404 | 8401 | 8403 | 8405 | 8412 |
| | | S/T | 0.88 | 1.00 | 1.00 | 1.00 | 1.00 | 0.69 | 0.82 | 0.92 | 0.94 | 1.00 | 0.57 | 0.69 | 0.80 | 0.82 | 0.94 | 0.39 | 0.49 | 0.58 | 0.60 | 0.71 |
| | | PI | 0.96 | 0.96 | 0.97 | 0.97 | 0.99 | 0.98 | 0.98 | 0.98 | 0.98 | 0.99 | 0.99 | 0.99 | 0.99 | 0.99 | 0.99 | 1.02 | 1.02 | 1.02 | 1.02 | 1.02 |
| | 122°F(50.0°C) | TC | 5098 | 5386 | 5624 | 5666 | 5949 | 5443 | 5457 | 5631 | 5673 | 5956 | 5734 | 5735 | 5744 | 5750 | 5961 | 6288 | 6290 | 6296 | 6296 | 6295 |
| | | S/T | 1.00 | 1.00 | 1.00 | 1.00 | 1.00 | 0.76 | 0.92 | 1.00 | 1.00 | 1.00 | 0.62 | 0.77 | 0.89 | 0.92 | 1.00 | 0.40 | 0.52 | 0.64 | 0.66 | 0.79 |
| | | PI | 0.81 | 0.82 | 0.82 | 0.83 | 0.83 | 0.82 | 0.82 | 0.82 | 0.83 | 0.83 | 0.83 | 0.83 | 0.83 | 0.83 | 0.83 | 0.84 | 0.84 | 0.84 | 0.84 | 0.84 |

## Table 6 – 12K, 115V Cooling Performance (Continued)

| AIRFLOW (CFM) | OUTDOOR DB (°F) | ID WB °F(C) | 60.8°F(16.0°C) | | | | | 64.4°F(18.0°C) | | | | | 67°F(19.4°C) | | | | | 71.6°F(22.0°C) | | | | |
|---|---|---|---|---|---|---|---|---|---|---|---|---|---|---|---|---|---|---|---|---|---|---|
| | | ID DB °F °C | 73.4°F 23.0°C | 77.0°F 25.0°C | 80.0°F 26.7°C | 80.6°F 27.0°C | 84.2°F 29.0°C | 73.4°F 23.0°C | 77.0°F 25.0°C | 80.0°F 26.7°C | 80.6°F 27.0°C | 84.2°F 29.0°C | 73.4°F 23.0°C | 77.0°F 25.0°C | 80.0°F 26.7°C | 80.6°F 27.0°C | 84.2°F 29.0°C | 73.4°F 23.0°C | 77.0°F 25.0°C | 80.0°F 26.7°C | 80.6°F 27.0°C | 84.2°F 29.0°C |
| 294 | 5°F(-15.0°C) | TC | 10258 | 10268 | 10406 | 10454 | 10773 | 10746 | 10749 | 10750 | 10750 | 10803 | 11098 | 11097 | 11100 | 11100 | 11102 | 11761 | 11758 | 11758 | 11759 | 11765 |
| | | S/T | 0.79 | 0.90 | 1.00 | 1.00 | 1.00 | 0.64 | 0.75 | 0.84 | 0.85 | 0.96 | 0.54 | 0.65 | 0.73 | 0.75 | 0.85 | 0.39 | 0.47 | 0.55 | 0.57 | 0.66 |
| | | PI | 0.54 | 0.54 | 0.54 | 0.54 | 0.54 | 0.54 | 0.54 | 0.54 | 0.54 | 0.54 | 0.54 | 0.54 | 0.54 | 0.54 | 0.54 | 0.55 | 0.55 | 0.55 | 0.55 | 0.55 |
| | 14°F(-10.0°C) | TC | 12037 | 12033 | 12083 | 12188 | 12566 | 12641 | 12634 | 12628 | 12627 | 12620 | 13078 | 13072 | 13062 | 13060 | 13049 | 13901 | 13896 | 13886 | 13883 | 13862 |
| | | S/T | 0.78 | 0.89 | 0.99 | 1.00 | 1.00 | 0.64 | 0.74 | 0.82 | 0.84 | 0.94 | 0.54 | 0.64 | 0.72 | 0.74 | 0.83 | 0.39 | 0.47 | 0.55 | 0.56 | 0.65 |
| | | PI | 0.53 | 0.53 | 0.53 | 0.53 | 0.53 | 0.53 | 0.53 | 0.53 | 0.53 | 0.53 | 0.53 | 0.53 | 0.53 | 0.53 | 0.53 | 0.53 | 0.53 | 0.53 | 0.53 | 0.53 |
| | 17°F(-8.3°C) | TC | 12644 | 12647 | 12802 | 12876 | 13290 | 13278 | 13280 | 13282 | 13283 | 13346 | 13702 | 13707 | 13716 | 13717 | 13720 | 14613 | 14609 | 14610 | 14613 | 14626 |
| | | S/T | 0.79 | 0.89 | 1.00 | 1.00 | 1.00 | 0.64 | 0.74 | 0.83 | 0.85 | 0.95 | 0.55 | 0.65 | 0.73 | 0.75 | 0.85 | 0.39 | 0.47 | 0.55 | 0.57 | 0.66 |
| | | PI | 0.53 | 0.53 | 0.53 | 0.53 | 0.53 | 0.53 | 0.53 | 0.53 | 0.53 | 0.53 | 0.53 | 0.53 | 0.53 | 0.53 | 0.53 | 0.53 | 0.53 | 0.53 | 0.53 | 0.53 |
| | 23°F(-5.0°C) | TC | 12266 | 12283 | 12482 | 12544 | 12954 | 12895 | 12898 | 12900 | 12900 | 12977 | 13350 | 13349 | 13353 | 13354 | 13356 | 14210 | 14206 | 14207 | 14209 | 14218 |
| | | S/T | 0.80 | 0.91 | 1.00 | 1.00 | 1.00 | 0.65 | 0.75 | 0.84 | 0.86 | 0.97 | 0.54 | 0.65 | 0.74 | 0.75 | 0.85 | 0.39 | 0.47 | 0.56 | 0.57 | 0.66 |
| | | PI | 0.57 | 0.57 | 0.57 | 0.58 | 0.58 | 0.58 | 0.58 | 0.58 | 0.58 | 0.58 | 0.58 | 0.58 | 0.58 | 0.58 | 0.58 | 0.59 | 0.59 | 0.59 | 0.59 | 0.59 |
| | 35°F(1.7°C) | TC | 11677 | 11678 | 11700 | 11713 | 12014 | 12237 | 12236 | 12236 | 12237 | 12237 | 12631 | 12630 | 12628 | 12628 | 12630 | 13362 | 13359 | 13356 | 13358 | 13356 |
| | | S/T | 0.75 | 0.85 | 0.93 | 0.94 | 1.00 | 0.62 | 0.71 | 0.79 | 0.80 | 0.89 | 0.53 | 0.62 | 0.69 | 0.71 | 0.80 | 0.39 | 0.46 | 0.53 | 0.54 | 0.63 |
| | | PI | 0.63 | 0.63 | 0.63 | 0.63 | 0.65 | 0.66 | 0.66 | 0.66 | 0.66 | 0.66 | 0.69 | 0.69 | 0.69 | 0.69 | 0.69 | 0.75 | 0.75 | 0.75 | 0.75 | 0.75 |
| | 41°F(5.0°C) | TC | 11304 | 11305 | 11336 | 11351 | 11673 | 11844 | 11843 | 11843 | 11843 | 11854 | 12223 | 12222 | 12221 | 12221 | 12222 | 12927 | 12924 | 12921 | 12922 | 12920 |
| | | S/T | 0.76 | 0.86 | 0.94 | 0.96 | 1.00 | 0.62 | 0.72 | 0.80 | 0.81 | 0.90 | 0.53 | 0.62 | 0.70 | 0.71 | 0.81 | 0.39 | 0.46 | 0.53 | 0.55 | 0.64 |
| | | PI | 0.51 | 0.51 | 0.52 | 0.52 | 0.53 | 0.54 | 0.54 | 0.54 | 0.54 | 0.55 | 0.57 | 0.57 | 0.57 | 0.57 | 0.57 | 0.62 | 0.62 | 0.62 | 0.62 | 0.62 |
| | 47°F(8.3°C) | TC | 10930 | 10930 | 10972 | 10992 | 11330 | 11450 | 11449 | 11449 | 11449 | 11466 | 11815 | 11814 | 11813 | 11813 | 11814 | 12493 | 12490 | 12489 | 12489 | 12487 |
| | | S/T | 0.77 | 0.87 | 0.95 | 0.97 | 1.00 | 0.63 | 0.72 | 0.81 | 0.82 | 0.91 | 0.53 | 0.63 | 0.71 | 0.72 | 0.82 | 0.39 | 0.46 | 0.54 | 0.55 | 0.64 |
| | | PI | 0.40 | 0.40 | 0.40 | 0.41 | 0.42 | 0.43 | 0.43 | 0.43 | 0.43 | 0.43 | 0.45 | 0.45 | 0.45 | 0.45 | 0.45 | 0.49 | 0.49 | 0.49 | 0.49 | 0.49 |
| | 50°F(10.0°C) | TC | 10602 | 10775 | 11135 | 11199 | 11628 | 11225 | 11232 | 11268 | 11283 | 11642 | 11667 | 11682 | 11689 | 11690 | 11742 | 12508 | 12514 | 12544 | 12548 | 12564 |
| | | S/T | 0.87 | 1.00 | 1.00 | 1.00 | 1.00 | 0.69 | 0.81 | 0.92 | 0.94 | 1.00 | 0.57 | 0.69 | 0.80 | 0.81 | 0.93 | 0.39 | 0.49 | 0.58 | 0.60 | 0.71 |
| | | PI | 0.46 | 0.46 | 0.46 | 0.46 | 0.46 | 0.46 | 0.46 | 0.46 | 0.46 | 0.46 | 0.46 | 0.46 | 0.46 | 0.46 | 0.46 | 0.46 | 0.46 | 0.46 | 0.46 | 0.46 |
| | 59°F(15.0°C) | TC | 10226 | 10472 | 10840 | 10906 | 11345 | 10850 | 10855 | 10908 | 10929 | 11358 | 11300 | 11312 | 11317 | 11317 | 11392 | 12163 | 12166 | 12190 | 12193 | 12205 |
| | | S/T | 0.88 | 1.00 | 1.00 | 1.00 | 1.00 | 0.70 | 0.83 | 0.94 | 0.97 | 1.00 | 0.58 | 0.71 | 0.81 | 0.83 | 0.96 | 0.39 | 0.50 | 0.59 | 0.61 | 0.73 |
| | | PI | 0.50 | 0.50 | 0.50 | 0.51 | 0.51 | 0.50 | 0.50 | 0.51 | 0.51 | 0.51 | 0.51 | 0.51 | 0.51 | 0.51 | 0.51 | 0.51 | 0.51 | 0.51 | 0.51 | 0.51 |
| | 68°F(20.0°C) | TC | 9861 | 10179 | 10553 | 10620 | 11066 | 10477 | 10480 | 10562 | 10631 | 11079 | 10933 | 10942 | 10945 | 10945 | 11070 | 11805 | 11809 | 11828 | 11830 | 11839 |
| | | S/T | 0.91 | 1.00 | 1.00 | 1.00 | 1.00 | 0.72 | 0.85 | 0.97 | 1.00 | 1.00 | 0.59 | 0.72 | 0.84 | 0.86 | 0.99 | 0.40 | 0.50 | 0.61 | 0.62 | 0.75 |
| | | PI | 0.54 | 0.54 | 0.55 | 0.55 | 0.55 | 0.55 | 0.55 | 0.55 | 0.55 | 0.55 | 0.55 | 0.55 | 0.55 | 0.55 | 0.55 | 0.56 | 0.56 | 0.56 | 0.56 | 0.56 |
| | 77°F(25.0°C) | TC | 9479 | 9842 | 10224 | 10292 | 10746 | 10095 | 10100 | 10216 | 10304 | 10759 | 10556 | 10568 | 10573 | 10585 | 10769 | 11433 | 11443 | 11469 | 11472 | 11484 |
| | | S/T | 0.92 | 1.00 | 1.00 | 1.00 | 1.00 | 0.72 | 0.87 | 0.99 | 1.00 | 1.00 | 0.59 | 0.73 | 0.85 | 0.86 | 1.00 | 0.40 | 0.51 | 0.61 | 0.63 | 0.76 |
| | | PI | 0.59 | 0.59 | 0.59 | 0.59 | 0.59 | 0.59 | 0.59 | 0.59 | 0.59 | 0.59 | 0.59 | 0.59 | 0.59 | 0.59 | 0.59 | 0.60 | 0.60 | 0.60 | 0.60 | 0.60 |
| | 82°F(27.8°C) | TC | 9548 | 9952 | 10349 | 10420 | 10893 | 10178 | 10194 | 10362 | 10432 | 10906 | 10654 | 10668 | 10674 | 10690 | 10916 | 11556 | 11571 | 11600 | 11603 | 11617 |
| | | S/T | 0.94 | 1.00 | 1.00 | 1.00 | 1.00 | 0.73 | 0.87 | 1.00 | 1.00 | 1.00 | 0.60 | 0.74 | 0.86 | 0.87 | 1.00 | 0.40 | 0.51 | 0.62 | 0.63 | 0.76 |
| | | PI | 0.69 | 0.69 | 0.69 | 0.70 | 0.70 | 0.69 | 0.69 | 0.69 | 0.70 | 0.70 | 0.70 | 0.70 | 0.70 | 0.70 | 0.70 | 0.70 | 0.70 | 0.70 | 0.70 | 0.70 |
| | 86°F(30.0°C) | TC | 9948 | 10409 | 10831 | 10906 | 11414 | 10605 | 10627 | 10844 | 10919 | 11423 | 11111 | 11124 | 11141 | 11152 | 11434 | 12066 | 12083 | 12112 | 12115 | 12127 |
| | | S/T | 0.95 | 1.00 | 1.00 | 1.00 | 1.00 | 0.74 | 0.88 | 1.00 | 1.00 | 1.00 | 0.60 | 0.75 | 0.86 | 0.88 | 1.00 | 0.40 | 0.51 | 0.62 | 0.64 | 0.77 |
| | | PI | 0.87 | 0.87 | 0.88 | 0.88 | 0.88 | 0.87 | 0.87 | 0.88 | 0.88 | 0.88 | 0.88 | 0.88 | 0.88 | 0.88 | 0.88 | 0.89 | 0.89 | 0.89 | 0.89 | 0.89 |
| | 95°F(35.0°C) | TC | 10980 | 11000 | 11236 | 11302 | 11745 | 11682 | 11685 | 11689 | 11690 | 11769 | 12187 | 12188 | 12194 | 12195 | 12201 | 13156 | 13151 | 13153 | 13152 | 13162 |
| | | S/T | 0.80 | 0.91 | 1.00 | 1.00 | 1.00 | 0.65 | 0.75 | 0.84 | 0.86 | 0.96 | 0.54 | 0.65 | 0.73 | 0.75 | 0.85 | 0.39 | 0.47 | 0.55 | 0.56 | 0.66 |
| | | PI | 1.23 | 1.23 | 1.24 | 1.24 | 1.27 | 1.26 | 1.26 | 1.26 | 1.26 | 1.27 | 1.29 | 1.29 | 1.29 | 1.29 | 1.29 | 1.35 | 1.35 | 1.35 | 1.35 | 1.35 |
| | 104°F(40.0°C) | TC | 9456 | 9490 | 9763 | 9821 | 10210 | 10061 | 10065 | 10067 | 10068 | 10200 | 10496 | 10498 | 10503 | 10504 | 10507 | 11330 | 11326 | 11328 | 11326 | 11337 |
| | | S/T | 0.82 | 0.94 | 1.00 | 1.00 | 1.00 | 0.66 | 0.77 | 0.86 | 0.88 | 1.00 | 0.55 | 0.66 | 0.75 | 0.77 | 0.87 | 0.39 | 0.47 | 0.56 | 0.58 | 0.67 |
| | | PI | 1.13 | 1.13 | 1.14 | 1.15 | 1.17 | 1.16 | 1.16 | 1.16 | 1.16 | 1.17 | 1.19 | 1.19 | 1.19 | 1.19 | 1.19 | 1.23 | 1.23 | 1.23 | 1.23 | 1.23 |
| | 110°F(43.0°C) | TC | 8487 | 8716 | 9047 | 9105 | 9496 | 9066 | 9069 | 9109 | 9126 | 9507 | 9480 | 9486 | 9489 | 9489 | 9544 | 10276 | 10272 | 10282 | 10284 | 10291 |
| | | S/T | 0.89 | 1.00 | 1.00 | 1.00 | 1.00 | 0.70 | 0.83 | 0.94 | 0.96 | 1.00 | 0.58 | 0.70 | 0.81 | 0.83 | 0.96 | 0.39 | 0.49 | 0.59 | 0.61 | 0.73 |
| | | PI | 1.08 | 1.09 | 1.10 | 1.11 | 1.12 | 1.10 | 1.10 | 1.11 | 1.11 | 1.12 | 1.12 | 1.12 | 1.12 | 1.12 | 1.12 | 1.16 | 1.16 | 1.16 | 1.16 | 1.16 |
| | 115°F(46.0°C) | TC | 7101 | 7368 | 7658 | 7709 | 8053 | 7584 | 7586 | 7652 | 7719 | 8062 | 7946 | 7953 | 7956 | 7956 | 8069 | 8624 | 8620 | 8633 | 8634 | 8639 |
| | | S/T | 0.92 | 1.00 | 1.00 | 1.00 | 1.00 | 0.72 | 0.86 | 0.98 | 1.00 | 1.00 | 0.59 | 0.73 | 0.84 | 0.86 | 1.00 | 0.40 | 0.50 | 0.61 | 0.63 | 0.75 |
| | | PI | 0.96 | 0.97 | 0.98 | 0.99 | 1.00 | 0.98 | 0.98 | 0.98 | 0.99 | 1.00 | 1.00 | 1.00 | 1.00 | 1.00 | 1.00 | 1.03 | 1.03 | 1.02 | 1.02 | 1.02 |
| | 122°F(50.0°C) | TC | 5337 | 5630 | 5880 | 5925 | 6222 | 5585 | 5628 | 5887 | 5931 | 6229 | 5881 | 5881 | 5911 | 5929 | 6234 | 6436 | 6449 | 6452 | 6452 | 6449 |
| | | S/T | 1.00 | 1.00 | 1.00 | 1.00 | 1.00 | 0.80 | 0.98 | 1.00 | 1.00 | 1.00 | 0.64 | 0.81 | 0.95 | 0.98 | 1.00 | 0.41 | 0.54 | 0.67 | 0.69 | 0.84 |
| | | PI | 0.82 | 0.83 | 0.83 | 0.84 | 0.84 | 0.83 | 0.83 | 0.83 | 0.84 | 0.84 | 0.84 | 0.83 | 0.83 | 0.84 | 0.84 | 0.85 | 0.85 | 0.85 | 0.85 | 0.85 |

**Manufacturer reserves the right to change, at any time, specifications and designs without notice and without obligations.**

## Table 6 – 12K, 115V Cooling Performance (Continued)

| AIRFLOW (CFM) | OUTDOOR DB (°F) | ID WB °F(C) | 60.8°F(16.0°C) | | | | | 64.4°F(18.0°C) | | | | | 67°F(19.4°C) | | | | | 71.6°F(22.0°C) | | | | |
|---|---|---|---|---|---|---|---|---|---|---|---|---|---|---|---|---|---|---|---|---|---|---|
| | | ID DB °F °C | 73.4°F 23.0°C | 77.0°F 25.0°C | 80.0°F 26.7°C | 80.6°F 27.0°C | 84.2°F 29.0°C | 73.4°F 23.0°C | 77.0°F 25.0°C | 80.0°F 26.7°C | 80.6°F 27.0°C | 84.2°F 29.0°C | 73.4°F 23.0°C | 77.0°F 25.0°C | 80.0°F 26.7°C | 80.6°F 27.0°C | 84.2°F 29.0°C | 73.4°F 23.0°C | 77.0°F 25.0°C | 80.0°F 26.7°C | 80.6°F 27.0°C | 84.2°F 29.0°C |
| 312 | 5°F(-15.0°C) | TC | 10569 | 10605 | 10847 | 10897 | 11233 | 11064 | 11067 | 11068 | 11079 | 11244 | 11418 | 11421 | 11423 | 11424 | 11439 | 12088 | 12084 | 12090 | 12092 | 12097 |
| | | S/T | 0.82 | 0.94 | 1.00 | 1.00 | 1.00 | 0.66 | 0.78 | 0.87 | 0.88 | 1.00 | 0.56 | 0.67 | 0.76 | 0.78 | 0.88 | 0.39 | 0.48 | 0.57 | 0.59 | 0.69 |
| | | PI | 0.55 | 0.55 | 0.55 | 0.55 | 0.55 | 0.55 | 0.55 | 0.55 | 0.55 | 0.55 | 0.55 | 0.55 | 0.55 | 0.55 | 0.55 | 0.57 | 0.57 | 0.57 | 0.57 | 0.57 |
| | 14°F(-10.0°C) | TC | 12411 | 12404 | 12657 | 12717 | 13111 | 13027 | 13015 | 13006 | 13005 | 13127 | 13473 | 13456 | 13442 | 13440 | 13427 | 14326 | 14322 | 14294 | 14289 | 14259 |
| | | S/T | 0.81 | 0.93 | 1.00 | 1.00 | 1.00 | 0.65 | 0.76 | 0.86 | 0.87 | 1.00 | 0.55 | 0.66 | 0.75 | 0.76 | 0.87 | 0.39 | 0.48 | 0.56 | 0.57 | 0.67 |
| | | PI | 0.54 | 0.54 | 0.54 | 0.54 | 0.54 | 0.54 | 0.54 | 0.54 | 0.54 | 0.54 | 0.54 | 0.54 | 0.54 | 0.54 | 0.54 | 0.54 | 0.54 | 0.54 | 0.54 | 0.54 |
| | 17°F(-8.3°C) | TC | 12992 | 13035 | 13336 | 13401 | 13836 | 13639 | 13645 | 13647 | 13659 | 13851 | 14105 | 14110 | 14115 | 14116 | 14134 | 15001 | 14996 | 14994 | 14997 | 15009 |
| | | S/T | 0.82 | 0.93 | 1.00 | 1.00 | 1.00 | 0.66 | 0.77 | 0.87 | 0.88 | 1.00 | 0.55 | 0.66 | 0.76 | 0.77 | 0.87 | 0.39 | 0.48 | 0.57 | 0.58 | 0.68 |
| | | PI | 0.54 | 0.54 | 0.54 | 0.54 | 0.54 | 0.54 | 0.54 | 0.54 | 0.54 | 0.54 | 0.54 | 0.54 | 0.54 | 0.54 | 0.54 | 0.54 | 0.54 | 0.54 | 0.54 | 0.54 |
| | 23°F(-5.0°C) | TC | 12636 | 12691 | 13019 | 13083 | 13514 | 13276 | 13280 | 13282 | 13299 | 13529 | 13734 | 13739 | 13742 | 13743 | 13765 | 14604 | 14599 | 14609 | 14611 | 14620 |
| | | S/T | 0.83 | 0.95 | 1.00 | 1.00 | 1.00 | 0.66 | 0.78 | 0.88 | 0.89 | 1.00 | 0.56 | 0.67 | 0.76 | 0.78 | 0.89 | 0.39 | 0.48 | 0.57 | 0.59 | 0.69 |
| | | PI | 0.58 | 0.58 | 0.59 | 0.59 | 0.59 | 0.59 | 0.59 | 0.59 | 0.59 | 0.59 | 0.59 | 0.59 | 0.59 | 0.59 | 0.59 | 0.60 | 0.60 | 0.60 | 0.60 | 0.60 |
| | 35°F(1.7°C) | TC | 12039 | 12040 | 12110 | 12144 | 12536 | 12602 | 12602 | 12603 | 12603 | 12636 | 12997 | 12996 | 12996 | 12997 | 12998 | 13728 | 13725 | 13724 | 13724 | 13725 |
| | | S/T | 0.78 | 0.88 | 0.97 | 0.99 | 1.00 | 0.63 | 0.73 | 0.82 | 0.83 | 0.93 | 0.54 | 0.63 | 0.72 | 0.73 | 0.83 | 0.39 | 0.46 | 0.54 | 0.56 | 0.65 |
| | | PI | 0.64 | 0.64 | 0.64 | 0.64 | 0.67 | 0.67 | 0.67 | 0.67 | 0.67 | 0.68 | 0.70 | 0.70 | 0.70 | 0.70 | 0.70 | 0.77 | 0.77 | 0.77 | 0.77 | 0.77 |
| | 41°F(5.0°C) | TC | 11654 | 11654 | 11747 | 11829 | 12178 | 12196 | 12196 | 12197 | 12197 | 12240 | 12577 | 12576 | 12577 | 12577 | 12578 | 13282 | 13279 | 13278 | 13278 | 13279 |
| | | S/T | 0.78 | 0.89 | 0.98 | 1.00 | 1.00 | 0.64 | 0.74 | 0.83 | 0.84 | 0.94 | 0.54 | 0.64 | 0.72 | 0.74 | 0.84 | 0.39 | 0.47 | 0.55 | 0.56 | 0.66 |
| | | PI | 0.52 | 0.52 | 0.53 | 0.53 | 0.55 | 0.56 | 0.56 | 0.56 | 0.56 | 0.56 | 0.58 | 0.58 | 0.58 | 0.58 | 0.58 | 0.63 | 0.63 | 0.63 | 0.63 | 0.63 |
| | 47°F(8.3°C) | TC | 11269 | 11276 | 11427 | 11478 | 11818 | 11791 | 11791 | 11791 | 11791 | 11845 | 12157 | 12156 | 12157 | 12157 | 12157 | 12838 | 12835 | 12834 | 12833 | 12834 |
| | | S/T | 0.79 | 0.90 | 1.00 | 1.00 | 1.00 | 0.64 | 0.75 | 0.84 | 0.85 | 0.96 | 0.54 | 0.65 | 0.73 | 0.75 | 0.85 | 0.39 | 0.47 | 0.55 | 0.57 | 0.67 |
| | | PI | 0.41 | 0.41 | 0.42 | 0.42 | 0.44 | 0.44 | 0.44 | 0.44 | 0.44 | 0.44 | 0.46 | 0.46 | 0.46 | 0.46 | 0.46 | 0.50 | 0.50 | 0.50 | 0.50 | 0.50 |
| | 50°F(10.0°C) | TC | 10939 | 11240 | 11619 | 11687 | 12140 | 11557 | 11563 | 11643 | 11680 | 12151 | 12007 | 12023 | 12029 | 12030 | 12146 | 12835 | 12869 | 12902 | 12906 | 12922 |
| | | S/T | 0.90 | 1.00 | 1.00 | 1.00 | 1.00 | 0.71 | 0.85 | 0.96 | 0.99 | 1.00 | 0.59 | 0.72 | 0.83 | 0.85 | 0.99 | 0.40 | 0.50 | 0.60 | 0.62 | 0.74 |
| | | PI | 0.47 | 0.47 | 0.47 | 0.47 | 0.47 | 0.47 | 0.47 | 0.47 | 0.47 | 0.47 | 0.47 | 0.47 | 0.47 | 0.47 | 0.47 | 0.47 | 0.47 | 0.47 | 0.47 | 0.47 |
| | 59°F(15.0°C) | TC | 10557 | 10928 | 11315 | 11384 | 11848 | 11170 | 11185 | 11312 | 11396 | 11859 | 11631 | 11643 | 11647 | 11664 | 11869 | 12489 | 12514 | 12539 | 12542 | 12552 |
| | | S/T | 0.92 | 1.00 | 1.00 | 1.00 | 1.00 | 0.73 | 0.86 | 1.00 | 1.00 | 1.00 | 0.60 | 0.73 | 0.85 | 0.86 | 1.00 | 0.40 | 0.51 | 0.61 | 0.63 | 0.76 |
| | | PI | 0.51 | 0.51 | 0.52 | 0.52 | 0.52 | 0.51 | 0.51 | 0.52 | 0.52 | 0.52 | 0.52 | 0.52 | 0.52 | 0.52 | 0.52 | 0.52 | 0.52 | 0.52 | 0.52 | 0.52 |
| | 68°F(20.0°C) | TC | 10173 | 10607 | 11000 | 11070 | 11540 | 10770 | 10794 | 11012 | 11082 | 11552 | 11235 | 11244 | 11264 | 11274 | 11561 | 12106 | 12128 | 12147 | 12149 | 12156 |
| | | S/T | 0.95 | 1.00 | 1.00 | 1.00 | 1.00 | 0.74 | 0.89 | 1.00 | 1.00 | 1.00 | 0.61 | 0.75 | 0.87 | 0.89 | 1.00 | 0.40 | 0.51 | 0.63 | 0.65 | 0.78 |
| | | PI | 0.55 | 0.56 | 0.56 | 0.56 | 0.56 | 0.56 | 0.56 | 0.56 | 0.56 | 0.56 | 0.56 | 0.56 | 0.56 | 0.56 | 0.56 | 0.57 | 0.57 | 0.57 | 0.57 | 0.57 |
| | 77°F(25.0°C) | TC | 9783 | 10254 | 10656 | 10727 | 11206 | 10371 | 10404 | 10667 | 10738 | 11217 | 10841 | 10853 | 10881 | 10893 | 11227 | 11709 | 11744 | 11772 | 11774 | 11785 |
| | | S/T | 0.97 | 1.00 | 1.00 | 1.00 | 1.00 | 0.75 | 0.90 | 1.00 | 1.00 | 1.00 | 0.61 | 0.76 | 0.88 | 0.90 | 1.00 | 0.40 | 0.52 | 0.63 | 0.65 | 0.79 |
| | | PI | 0.60 | 0.60 | 0.60 | 0.60 | 0.61 | 0.60 | 0.60 | 0.60 | 0.60 | 0.61 | 0.61 | 0.60 | 0.60 | 0.60 | 0.61 | 0.61 | 0.61 | 0.61 | 0.61 | 0.61 |
| | 82°F(27.8°C) | TC | 9862 | 10365 | 10783 | 10856 | 11354 | 10450 | 10491 | 10793 | 10869 | 11365 | 10937 | 10950 | 10984 | 10998 | 11375 | 11825 | 11869 | 11900 | 11903 | 11916 |
| | | S/T | 0.99 | 1.00 | 1.00 | 1.00 | 1.00 | 0.76 | 0.91 | 1.00 | 1.00 | 1.00 | 0.62 | 0.77 | 0.89 | 0.92 | 1.00 | 0.40 | 0.52 | 0.64 | 0.66 | 0.80 |
| | | PI | 0.70 | 0.71 | 0.71 | 0.71 | 0.71 | 0.71 | 0.71 | 0.71 | 0.71 | 0.71 | 0.71 | 0.71 | 0.71 | 0.71 | 0.71 | 0.72 | 0.72 | 0.72 | 0.72 | 0.72 |
| | 86°F(30.0°C) | TC | 10331 | 10846 | 11290 | 11369 | 11898 | 10895 | 10945 | 11303 | 11382 | 11911 | 11411 | 11424 | 11466 | 11482 | 11921 | 12354 | 12401 | 12431 | 12434 | 12445 |
| | | S/T | 1.00 | 1.00 | 1.00 | 1.00 | 1.00 | 0.77 | 0.93 | 1.00 | 1.00 | 1.00 | 0.62 | 0.78 | 0.91 | 0.93 | 1.00 | 0.40 | 0.52 | 0.64 | 0.66 | 0.81 |
| | | PI | 0.89 | 0.89 | 0.89 | 0.90 | 0.90 | 0.89 | 0.89 | 0.90 | 0.90 | 0.90 | 0.90 | 0.90 | 0.90 | 0.90 | 0.90 | 0.91 | 0.91 | 0.91 | 0.91 | 0.91 |
| | 95°F(35.0°C) | TC | 11313 | 11374 | 11741 | 11811 | 12278 | 12023 | 12030 | 12034 | 12048 | 12293 | 12539 | 12542 | 12549 | 12550 | 12571 | 13511 | 13506 | 13509 | 13513 | 13531 |
| | | S/T | 0.83 | 0.95 | 1.00 | 1.00 | 1.00 | 0.66 | 0.78 | 0.88 | 0.89 | 1.00 | 0.56 | 0.67 | 0.76 | 0.78 | 0.88 | 0.39 | 0.48 | 0.57 | 0.58 | 0.68 |
| | | PI | 1.25 | 1.25 | 1.27 | 1.27 | 1.30 | 1.29 | 1.29 | 1.29 | 1.29 | 1.30 | 1.32 | 1.32 | 1.32 | 1.32 | 1.32 | 1.37 | 1.37 | 1.37 | 1.37 | 1.37 |
| | 104°F(40.0°C) | TC | 9743 | 9833 | 10203 | 10264 | 10674 | 10357 | 10363 | 10381 | 10393 | 10687 | 10799 | 10804 | 10809 | 10810 | 10840 | 11640 | 11635 | 11641 | 11645 | 11657 |
| | | S/T | 0.85 | 0.98 | 1.00 | 1.00 | 1.00 | 0.68 | 0.80 | 0.90 | 0.92 | 1.00 | 0.56 | 0.68 | 0.78 | 0.80 | 0.91 | 0.39 | 0.48 | 0.58 | 0.59 | 0.70 |
| | | PI | 1.15 | 1.15 | 1.17 | 1.18 | 1.20 | 1.18 | 1.18 | 1.18 | 1.18 | 1.20 | 1.21 | 1.21 | 1.21 | 1.21 | 1.21 | 1.26 | 1.26 | 1.26 | 1.26 | 1.26 |
| | 110°F(43.0°C) | TC | 8768 | 9105 | 9452 | 9514 | 9926 | 9335 | 9338 | 9442 | 9525 | 9936 | 9755 | 9763 | 9765 | 9773 | 9945 | 10559 | 10559 | 10576 | 10577 | 10583 |
| | | S/T | 0.92 | 1.00 | 1.00 | 1.00 | 1.00 | 0.72 | 0.87 | 0.99 | 1.00 | 1.00 | 0.60 | 0.73 | 0.85 | 0.86 | 1.00 | 0.40 | 0.51 | 0.61 | 0.63 | 0.76 |
| | | PI | 1.10 | 1.11 | 1.13 | 1.13 | 1.15 | 1.13 | 1.13 | 1.13 | 1.13 | 1.15 | 1.14 | 1.14 | 1.14 | 1.14 | 1.15 | 1.18 | 1.18 | 1.18 | 1.18 | 1.18 |
| | 115°F(46.0°C) | TC | 7341 | 7695 | 7999 | 8059 | 8414 | 7807 | 7823 | 8008 | 8069 | 8422 | 8171 | 8176 | 8187 | 8195 | 8430 | 8860 | 8867 | 8879 | 8880 | 8883 |
| | | S/T | 0.96 | 1.00 | 1.00 | 1.00 | 1.00 | 0.75 | 0.89 | 1.00 | 1.00 | 1.00 | 0.61 | 0.75 | 0.87 | 0.90 | 1.00 | 0.40 | 0.52 | 0.63 | 0.65 | 0.78 |
| | | PI | 0.98 | 1.00 | 1.01 | 1.02 | 1.03 | 1.00 | 1.00 | 1.01 | 1.02 | 1.03 | 1.02 | 1.02 | 1.02 | 1.02 | 1.03 | 1.05 | 1.05 | 1.05 | 1.05 | 1.05 |
| | 122°F(50.0°C) | TC | 5508 | 5812 | 6072 | 6118 | 6427 | 5684 | 5818 | 6079 | 6125 | 6433 | 5986 | 5984 | 6084 | 6129 | 6437 | 6536 | 6561 | 6563 | 6562 | 6571 |
| | | S/T | 1.00 | 1.00 | 1.00 | 1.00 | 1.00 | 0.84 | 1.00 | 1.00 | 1.00 | 1.00 | 0.67 | 0.85 | 1.00 | 1.00 | 1.00 | 0.41 | 0.55 | 0.69 | 0.72 | 0.88 |
| | | PI | 0.84 | 0.84 | 0.85 | 0.85 | 0.86 | 0.84 | 0.84 | 0.85 | 0.85 | 0.86 | 0.85 | 0.85 | 0.85 | 0.85 | 0.86 | 0.87 | 0.87 | 0.86 | 0.86 | 0.86 |

## Table 7 – 9K Cooling Performance

| AIRFLOW (CFM) | OUTDOOR DB (°F) | ID WB (°F) | 60.8°F(16.0°C) | | | | | 64.4°F(18.0°C) | | | | | 67°F(19.4°C) | | | | | 71.6°F(22.0°C) | | | | |
|---|---|---|---|---|---|---|---|---|---|---|---|---|---|---|---|---|---|---|---|---|---|---|
| | | ID DB °F °C | 73.4°F 23.0°C | 77.0°F 25.0°C | 80.0°F 26.7°C | 80.6°F 27.0°C | 84.2°F 29.0°C | 73.4°F 23.0°C | 77.0°F 25.0°C | 80.0°F 26.7°C | 80.6°F 27.0°C | 84.2°F 29.0°C | 73.4°F 23.0°C | 77.0°F 25.0°C | 80.0°F 26.7°C | 80.6°F 27.0°C | 84.2°F 29.0°C | 73.4°F 23.0°C | 77.0°F 25.0°C | 80.0°F 26.7°C | 80.6°F 27.0°C | 84.2°F 29.0°C |
| 176 | 5°F(-15.0°C) | TC | 10767 | 10767 | 10767 | 10767 | 10928 | 11305 | 11303 | 11302 | 11303 | 11304 | 11691 | 11691 | 11689 | 11689 | 11690 | 12433 | 12429 | 12426 | 12426 | 12426 |
| | | S/T | 0.73 | 0.82 | 0.90 | 0.91 | 1.00 | 0.60 | 0.69 | 0.76 | 0.77 | 0.86 | 0.52 | 0.60 | 0.67 | 0.68 | 0.77 | 0.39 | 0.47 | 0.52 | 0.53 | 0.61 |
| | | PI | 0.64 | 0.64 | 0.64 | 0.64 | 0.64 | 0.64 | 0.64 | 0.64 | 0.64 | 0.64 | 0.64 | 0.64 | 0.64 | 0.64 | 0.64 | 0.65 | 0.65 | 0.65 | 0.65 | 0.65 |
| | 14°F(-10.0°C) | TC | 10865 | 10864 | 10862 | 10862 | 10915 | 11435 | 11432 | 11430 | 11430 | 11428 | 11843 | 11840 | 11837 | 11837 | 11834 | 12617 | 12613 | 12610 | 12609 | 12605 |
| | | S/T | 0.73 | 0.81 | 0.89 | 0.90 | 0.99 | 0.60 | 0.68 | 0.75 | 0.76 | 0.85 | 0.52 | 0.60 | 0.66 | 0.68 | 0.76 | 0.39 | 0.47 | 0.51 | 0.53 | 0.60 |
| | | PI | 0.61 | 0.61 | 0.61 | 0.61 | 0.61 | 0.60 | 0.60 | 0.60 | 0.60 | 0.60 | 0.60 | 0.60 | 0.60 | 0.60 | 0.60 | 0.60 | 0.60 | 0.60 | 0.60 | 0.60 |
| | 17°F(-8.3°C) | TC | 10906 | 10903 | 10902 | 10902 | 11059 | 11478 | 11475 | 11473 | 11472 | 11472 | 11888 | 11888 | 11886 | 11886 | 11888 | 12691 | 12688 | 12685 | 12684 | 12685 |
| | | S/T | 0.73 | 0.82 | 0.89 | 0.91 | 1.00 | 0.60 | 0.69 | 0.76 | 0.77 | 0.85 | 0.52 | 0.60 | 0.67 | 0.68 | 0.76 | 0.39 | 0.47 | 0.52 | 0.53 | 0.61 |
| | | PI | 0.59 | 0.59 | 0.59 | 0.59 | 0.59 | 0.59 | 0.59 | 0.59 | 0.59 | 0.59 | 0.59 | 0.59 | 0.59 | 0.59 | 0.59 | 0.59 | 0.59 | 0.59 | 0.59 | 0.59 |
| | 23°F(-5.0°C) | TC | 10628 | 10628 | 10628 | 10635 | 10829 | 11200 | 11197 | 11197 | 11198 | 11199 | 11611 | 11610 | 11609 | 11609 | 11610 | 12403 | 12399 | 12396 | 12396 | 12396 |
| | | S/T | 0.74 | 0.83 | 0.90 | 0.91 | 1.00 | 0.61 | 0.69 | 0.77 | 0.78 | 0.86 | 0.52 | 0.60 | 0.67 | 0.69 | 0.77 | 0.39 | 0.47 | 0.52 | 0.53 | 0.61 |
| | | PI | 0.65 | 0.65 | 0.65 | 0.65 | 0.65 | 0.65 | 0.65 | 0.65 | 0.65 | 0.65 | 0.65 | 0.65 | 0.65 | 0.65 | 0.65 | 0.66 | 0.66 | 0.66 | 0.66 | 0.66 |
| | 35°F(1.7°C) | TC | 10158 | 10157 | 10157 | 10156 | 10170 | 10684 | 10683 | 10682 | 10682 | 10681 | 11056 | 11054 | 11054 | 11053 | 11052 | 11753 | 11750 | 11748 | 11747 | 11747 |
| | | S/T | 0.70 | 0.78 | 0.85 | 0.86 | 0.93 | 0.59 | 0.66 | 0.72 | 0.74 | 0.81 | 0.51 | 0.58 | 0.64 | 0.65 | 0.73 | 0.39 | 0.46 | 0.50 | 0.51 | 0.58 |
| | | PI | 0.70 | 0.70 | 0.70 | 0.70 | 0.70 | 0.74 | 0.74 | 0.74 | 0.74 | 0.74 | 0.77 | 0.77 | 0.77 | 0.77 | 0.77 | 0.84 | 0.84 | 0.84 | 0.84 | 0.84 |
| | 41°F(5.0°C) | TC | 10346 | 10345 | 10345 | 10344 | 10369 | 10878 | 10877 | 10876 | 10875 | 10874 | 11254 | 11252 | 11251 | 11251 | 11249 | 11958 | 11955 | 11953 | 11953 | 11952 |
| | | S/T | 0.71 | 0.79 | 0.86 | 0.87 | 0.95 | 0.59 | 0.67 | 0.73 | 0.74 | 0.82 | 0.51 | 0.59 | 0.65 | 0.66 | 0.73 | 0.39 | 0.46 | 0.51 | 0.52 | 0.59 |
| | | PI | 0.61 | 0.61 | 0.61 | 0.61 | 0.61 | 0.65 | 0.65 | 0.65 | 0.65 | 0.65 | 0.68 | 0.68 | 0.68 | 0.68 | 0.68 | 0.74 | 0.74 | 0.74 | 0.74 | 0.74 |
| | 47°F(8.3°C) | TC | 10533 | 10532 | 10531 | 10531 | 10568 | 11071 | 11069 | 11068 | 11068 | 11067 | 11451 | 11449 | 11448 | 11448 | 11446 | 12162 | 12160 | 12157 | 12157 | 12156 |
| | | S/T | 0.71 | 0.80 | 0.87 | 0.88 | 0.96 | 0.59 | 0.67 | 0.74 | 0.75 | 0.83 | 0.51 | 0.59 | 0.65 | 0.66 | 0.74 | 0.39 | 0.46 | 0.51 | 0.52 | 0.59 |
| | | PI | 0.52 | 0.52 | 0.52 | 0.52 | 0.52 | 0.55 | 0.55 | 0.55 | 0.55 | 0.55 | 0.58 | 0.58 | 0.58 | 0.58 | 0.58 | 0.63 | 0.63 | 0.63 | 0.63 | 0.63 |
| | 50°F(10.0°C) | TC | 10192 | 10194 | 10288 | 10371 | 10756 | 10809 | 10811 | 10814 | 10815 | 10855 | 11256 | 11257 | 11262 | 11263 | 11268 | 12123 | 12119 | 12120 | 12119 | 12130 |
| | | S/T | 0.79 | 0.89 | 0.99 | 1.00 | 1.00 | 0.64 | 0.74 | 0.82 | 0.84 | 0.94 | 0.54 | 0.64 | 0.72 | 0.73 | 0.83 | 0.39 | 0.46 | 0.54 | 0.56 | 0.65 |
| | | PI | 0.60 | 0.60 | 0.60 | 0.60 | 0.60 | 0.60 | 0.60 | 0.60 | 0.60 | 0.60 | 0.60 | 0.60 | 0.60 | 0.60 | 0.60 | 0.60 | 0.60 | 0.60 | 0.60 | 0.60 |
| | 59°F(15.0°C) | TC | 9642 | 9656 | 9846 | 9904 | 10291 | 10255 | 10257 | 10259 | 10259 | 10322 | 10703 | 10701 | 10705 | 10706 | 10709 | 11564 | 11559 | 11560 | 11560 | 11568 |
| | | S/T | 0.80 | 0.91 | 1.00 | 1.00 | 1.00 | 0.65 | 0.75 | 0.84 | 0.86 | 0.96 | 0.54 | 0.65 | 0.73 | 0.75 | 0.85 | 0.39 | 0.47 | 0.55 | 0.56 | 0.66 |
| | | PI | 0.64 | 0.64 | 0.64 | 0.64 | 0.64 | 0.64 | 0.64 | 0.64 | 0.64 | 0.64 | 0.65 | 0.65 | 0.65 | 0.65 | 0.65 | 0.65 | 0.65 | 0.65 | 0.65 | 0.65 |
| | 68°F(20.0°C) | TC | 9101 | 9131 | 9389 | 9446 | 9833 | 9705 | 9707 | 9708 | 9709 | 9825 | 10146 | 10144 | 10148 | 10149 | 10151 | 10995 | 10990 | 10990 | 10990 | 10999 |
| | | S/T | 0.82 | 0.94 | 1.00 | 1.00 | 1.00 | 0.66 | 0.77 | 0.86 | 0.88 | 1.00 | 0.55 | 0.66 | 0.75 | 0.77 | 0.87 | 0.39 | 0.47 | 0.56 | 0.57 | 0.67 |
| | | PI | 0.69 | 0.69 | 0.69 | 0.69 | 0.69 | 0.69 | 0.69 | 0.69 | 0.69 | 0.69 | 0.70 | 0.70 | 0.70 | 0.70 | 0.70 | 0.71 | 0.71 | 0.71 | 0.71 | 0.71 |
| | 77°F(25.0°C) | TC | 8551 | 8593 | 8888 | 8946 | 9331 | 9149 | 9152 | 9154 | 9163 | 9345 | 9587 | 9586 | 9591 | 9592 | 9603 | 10428 | 10424 | 10425 | 10425 | 10437 |
| | | S/T | 0.83 | 0.96 | 1.00 | 1.00 | 1.00 | 0.66 | 0.78 | 0.88 | 0.89 | 1.00 | 0.55 | 0.67 | 0.76 | 0.78 | 0.88 | 0.39 | 0.48 | 0.56 | 0.58 | 0.68 |
| | | PI | 0.74 | 0.74 | 0.74 | 0.74 | 0.74 | 0.74 | 0.74 | 0.74 | 0.74 | 0.74 | 0.75 | 0.75 | 0.75 | 0.75 | 0.75 | 0.75 | 0.75 | 0.75 | 0.75 | 0.75 |
| | 82°F(27.8°C) | TC | 8597 | 8652 | 8984 | 9044 | 9443 | 9214 | 9218 | 9226 | 9234 | 9457 | 9666 | 9666 | 9672 | 9673 | 9689 | 10535 | 10530 | 10532 | 10533 | 10547 |
| | | S/T | 0.84 | 0.97 | 1.00 | 1.00 | 1.00 | 0.67 | 0.79 | 0.88 | 0.90 | 1.00 | 0.56 | 0.67 | 0.77 | 0.78 | 0.89 | 0.39 | 0.48 | 0.57 | 0.58 | 0.68 |
| | | PI | 0.82 | 0.82 | 0.83 | 0.83 | 0.83 | 0.83 | 0.83 | 0.83 | 0.83 | 0.83 | 0.83 | 0.83 | 0.83 | 0.83 | 0.83 | 0.84 | 0.84 | 0.84 | 0.84 | 0.84 |
| | 86°F(30.0°C) | TC | 9075 | 9154 | 9535 | 9600 | 10031 | 9738 | 9742 | 9756 | 9765 | 10046 | 10222 | 10224 | 10229 | 10230 | 10253 | 11156 | 11150 | 11152 | 11154 | 11168 |
| | | S/T | 0.85 | 0.98 | 1.00 | 1.00 | 1.00 | 0.67 | 0.80 | 0.89 | 0.91 | 1.00 | 0.56 | 0.68 | 0.77 | 0.79 | 0.90 | 0.39 | 0.48 | 0.57 | 0.59 | 0.69 |
| | | PI | 0.96 | 0.97 | 0.97 | 0.97 | 0.98 | 0.97 | 0.97 | 0.97 | 0.97 | 0.98 | 0.98 | 0.98 | 0.98 | 0.98 | 0.98 | 0.99 | 0.99 | 0.99 | 0.99 | 0.99 |
| | 95°F(35.0°C) | TC | 10299 | 10299 | 10300 | 10311 | 10575 | 10989 | 10986 | 10985 | 10985 | 10987 | 11486 | 11485 | 11482 | 11482 | 11483 | 12447 | 12443 | 12439 | 12439 | 12439 |
| | | S/T | 0.74 | 0.83 | 0.91 | 0.92 | 1.00 | 0.61 | 0.69 | 0.77 | 0.78 | 0.87 | 0.52 | 0.60 | 0.67 | 0.69 | 0.77 | 0.39 | 0.47 | 0.52 | 0.53 | 0.61 |
| | | PI | 1.24 | 1.24 | 1.24 | 1.24 | 1.25 | 1.28 | 1.28 | 1.28 | 1.28 | 1.28 | 1.30 | 1.30 | 1.30 | 1.30 | 1.30 | 1.36 | 1.36 | 1.36 | 1.36 | 1.36 |
| | 104°F(40.0°C) | TC | 9472 | 9473 | 9490 | 9503 | 9820 | 10105 | 10103 | 10103 | 10103 | 10105 | 10562 | 10561 | 10559 | 10559 | 10560 | 11444 | 11440 | 11437 | 11436 | 11436 |
| | | S/T | 0.75 | 0.85 | 0.93 | 0.95 | 1.00 | 0.61 | 0.71 | 0.78 | 0.80 | 0.89 | 0.52 | 0.61 | 0.69 | 0.70 | 0.79 | 0.39 | 0.45 | 0.52 | 0.54 | 0.62 |
| | | PI | 1.23 | 1.23 | 1.23 | 1.23 | 1.25 | 1.27 | 1.27 | 1.27 | 1.27 | 1.27 | 1.29 | 1.29 | 1.29 | 1.29 | 1.29 | 1.35 | 1.35 | 1.35 | 1.35 | 1.35 |
| | 110°F(43.0°C) | TC | 8919 | 8932 | 9133 | 9192 | 9579 | 9550 | 9549 | 9551 | 9551 | 9606 | 10005 | 10004 | 10005 | 10005 | 10008 | 10882 | 10878 | 10878 | 10878 | 10877 |
| | | S/T | 0.80 | 0.91 | 1.00 | 1.00 | 1.00 | 0.64 | 0.75 | 0.84 | 0.86 | 0.96 | 0.54 | 0.65 | 0.73 | 0.75 | 0.85 | 0.39 | 0.47 | 0.55 | 0.56 | 0.66 |
| | | PI | 1.24 | 1.24 | 1.25 | 1.25 | 1.27 | 1.27 | 1.27 | 1.27 | 1.27 | 1.27 | 1.29 | 1.29 | 1.29 | 1.29 | 1.29 | 1.33 | 1.33 | 1.33 | 1.33 | 1.33 |
| | 115°F(46.0°C) | TC | 7832 | 7862 | 8130 | 8184 | 8542 | 8401 | 8402 | 8403 | 8403 | 8554 | 8812 | 8811 | 8813 | 8814 | 8814 | 9603 | 9599 | 9598 | 9598 | 9602 |
| | | S/T | 0.83 | 0.95 | 1.00 | 1.00 | 1.00 | 0.66 | 0.77 | 0.87 | 0.89 | 1.00 | 0.55 | 0.66 | 0.75 | 0.77 | 0.88 | 0.39 | 0.47 | 0.56 | 0.57 | 0.67 |
| | | PI | 1.10 | 1.10 | 1.11 | 1.11 | 1.13 | 1.12 | 1.12 | 1.12 | 1.12 | 1.13 | 1.14 | 1.14 | 1.14 | 1.14 | 1.14 | 1.17 | 1.17 | 1.17 | 1.17 | 1.17 |
| | 122°F(50.0°C) | TC | 6354 | 6629 | 6920 | 6970 | 7316 | 6853 | 6853 | 6913 | 6980 | 7325 | 7222 | 7224 | 7225 | 7224 | 7333 | 7937 | 7933 | 7938 | 7939 | 7940 |
| | | S/T | 0.93 | 1.00 | 1.00 | 1.00 | 1.00 | 0.72 | 0.86 | 0.99 | 1.00 | 1.00 | 0.59 | 0.73 | 0.84 | 0.86 | 1.00 | 0.39 | 0.50 | 0.61 | 0.62 | 0.75 |
| | | PI | 0.92 | 0.93 | 0.93 | 0.93 | 0.94 | 0.93 | 0.93 | 0.93 | 0.93 | 0.94 | 0.94 | 0.94 | 0.94 | 0.94 | 0.94 | 0.96 | 0.96 | 0.96 | 0.96 | 0.96 |

## Table 7 – 9K Cooling Performance (Continued)

| AIRFLOW (CFM) | OUTDOOR DB (°F) | ID WB (°F) | 60.8°F(16.0°C) | | | | | 64.4°F(18.0°C) | | | | | 67°F(19.4°C) | | | | | 71.6°F(22.0°C) | | | | |
|---|---|---|---|---|---|---|---|---|---|---|---|---|---|---|---|---|---|---|---|---|---|---|
| | | ID DB °F °C | 73.4°F 23.0°C | 77.0°F 25.0°C | 80.0°F 26.7°C | 80.6°F 27.0°C | 84.2°F 29.0°C | 73.4°F 23.0°C | 77.0°F 25.0°C | 80.0°F 26.7°C | 80.6°F 27.0°C | 84.2°F 29.0°C | 73.4°F 23.0°C | 77.0°F 25.0°C | 80.0°F 26.7°C | 80.6°F 27.0°C | 84.2°F 29.0°C | 73.4°F 23.0°C | 77.0°F 25.0°C | 80.0°F 26.7°C | 80.6°F 27.0°C | 84.2°F 29.0°C |
| 241 | 5°F(-15.0°C) | TC | 11101 | 11102 | 11137 | 11153 | 11479 | 11642 | 11641 | 11643 | 11643 | 11657 | 12029 | 12029 | 12029 | 12030 | 12032 | 12769 | 12765 | 12765 | 12765 | 12766 |
| | | S/T | 0.76 | 0.86 | 0.94 | 0.96 | 1.00 | 0.62 | 0.72 | 0.80 | 0.81 | 0.90 | 0.53 | 0.62 | 0.70 | 0.72 | 0.81 | 0.39 | 0.46 | 0.54 | 0.55 | 0.64 |
| | | PI | 0.63 | 0.63 | 0.63 | 0.63 | 0.63 | 0.63 | 0.63 | 0.63 | 0.63 | 0.64 | 0.64 | 0.64 | 0.64 | 0.64 | 0.64 | 0.65 | 0.65 | 0.65 | 0.65 | 0.65 |
| | 14°F(-10.0°C) | TC | 11208 | 11206 | 11204 | 11203 | 11521 | 11781 | 11777 | 11774 | 11773 | 11769 | 12190 | 12186 | 12182 | 12181 | 12175 | 12968 | 12964 | 12959 | 12959 | 12950 |
| | | S/T | 0.75 | 0.85 | 0.93 | 0.95 | 1.00 | 0.62 | 0.71 | 0.79 | 0.80 | 0.89 | 0.53 | 0.62 | 0.69 | 0.71 | 0.79 | 0.39 | 0.46 | 0.53 | 0.54 | 0.63 |
| | | PI | 0.61 | 0.61 | 0.61 | 0.61 | 0.60 | 0.60 | 0.60 | 0.60 | 0.60 | 0.60 | 0.60 | 0.60 | 0.60 | 0.60 | 0.60 | 0.60 | 0.60 | 0.60 | 0.60 | 0.60 |
| | 17°F(-8.3°C) | TC | 11243 | 11239 | 11268 | 11284 | 11622 | 11817 | 11813 | 11815 | 11816 | 11828 | 12231 | 12231 | 12232 | 12233 | 12237 | 13033 | 13029 | 13030 | 13030 | 13033 |
| | | S/T | 0.76 | 0.86 | 0.94 | 0.96 | 1.00 | 0.62 | 0.72 | 0.80 | 0.81 | 0.90 | 0.53 | 0.62 | 0.70 | 0.71 | 0.80 | 0.39 | 0.46 | 0.53 | 0.55 | 0.63 |
| | | PI | 0.59 | 0.59 | 0.59 | 0.59 | 0.59 | 0.59 | 0.59 | 0.59 | 0.59 | 0.59 | 0.59 | 0.59 | 0.59 | 0.59 | 0.59 | 0.59 | 0.59 | 0.59 | 0.59 | 0.59 |
| | 23°F(-5.0°C) | TC | 10958 | 10959 | 11003 | 11023 | 11385 | 11533 | 11533 | 11535 | 11535 | 11553 | 11946 | 11946 | 11947 | 11947 | 11950 | 12737 | 12734 | 12734 | 12733 | 12735 |
| | | S/T | 0.77 | 0.87 | 0.95 | 0.97 | 1.00 | 0.62 | 0.72 | 0.80 | 0.82 | 0.91 | 0.53 | 0.63 | 0.71 | 0.72 | 0.81 | 0.39 | 0.46 | 0.54 | 0.55 | 0.64 |
| | | PI | 0.64 | 0.64 | 0.64 | 0.64 | 0.65 | 0.65 | 0.65 | 0.65 | 0.65 | 0.65 | 0.65 | 0.65 | 0.65 | 0.65 | 0.65 | 0.66 | 0.66 | 0.66 | 0.66 | 0.66 |
| | 35°F(1.7°C) | TC | 10491 | 10490 | 10490 | 10490 | 10625 | 11012 | 11010 | 11009 | 11009 | 11010 | 11378 | 11377 | 11375 | 11375 | 11375 | 12062 | 12059 | 12057 | 12057 | 12056 |
| | | S/T | 0.73 | 0.81 | 0.89 | 0.90 | 1.00 | 0.60 | 0.68 | 0.76 | 0.77 | 0.85 | 0.52 | 0.60 | 0.67 | 0.68 | 0.76 | 0.39 | 0.47 | 0.52 | 0.53 | 0.60 |
| | | PI | 0.70 | 0.70 | 0.70 | 0.70 | 0.71 | 0.74 | 0.74 | 0.74 | 0.74 | 0.74 | 0.77 | 0.77 | 0.77 | 0.77 | 0.77 | 0.84 | 0.84 | 0.84 | 0.84 | 0.84 |
| | 41°F(5.0°C) | TC | 10657 | 10682 | 10682 | 10686 | 10862 | 11211 | 11209 | 11208 | 11208 | 11208 | 11581 | 11580 | 11578 | 11578 | 11578 | 12273 | 12270 | 12268 | 12267 | 12266 |
| | | S/T | 0.74 | 0.82 | 0.90 | 0.91 | 1.00 | 0.60 | 0.69 | 0.76 | 0.78 | 0.86 | 0.52 | 0.60 | 0.67 | 0.69 | 0.77 | 0.39 | 0.45 | 0.52 | 0.53 | 0.61 |
| | | PI | 0.61 | 0.61 | 0.61 | 0.61 | 0.62 | 0.65 | 0.65 | 0.65 | 0.65 | 0.65 | 0.68 | 0.68 | 0.68 | 0.68 | 0.68 | 0.74 | 0.74 | 0.74 | 0.74 | 0.74 |
| | 47°F(8.3°C) | TC | 10875 | 10874 | 10874 | 10885 | 11099 | 11408 | 11406 | 11405 | 11406 | 11406 | 11784 | 11783 | 11781 | 11781 | 11781 | 12484 | 12482 | 12479 | 12479 | 12478 |
| | | S/T | 0.74 | 0.83 | 0.91 | 0.92 | 1.00 | 0.61 | 0.70 | 0.77 | 0.78 | 0.87 | 0.52 | 0.61 | 0.68 | 0.69 | 0.78 | 0.39 | 0.45 | 0.52 | 0.53 | 0.62 |
| | | PI | 0.52 | 0.52 | 0.52 | 0.52 | 0.53 | 0.55 | 0.55 | 0.55 | 0.55 | 0.55 | 0.58 | 0.58 | 0.58 | 0.58 | 0.58 | 0.63 | 0.63 | 0.63 | 0.63 | 0.63 |
| | 50°F(10.0°C) | TC | 10502 | 10547 | 10844 | 10906 | 11318 | 11125 | 11132 | 11135 | 11147 | 11332 | 11577 | 11583 | 11590 | 11591 | 11608 | 12439 | 12435 | 12449 | 12452 | 12469 |
| | | S/T | 0.83 | 0.95 | 1.00 | 1.00 | 1.00 | 0.66 | 0.78 | 0.87 | 0.88 | 1.00 | 0.55 | 0.66 | 0.76 | 0.77 | 0.88 | 0.39 | 0.48 | 0.56 | 0.58 | 0.68 |
| | | PI | 0.60 | 0.60 | 0.60 | 0.60 | 0.60 | 0.60 | 0.60 | 0.60 | 0.60 | 0.60 | 0.60 | 0.60 | 0.60 | 0.60 | 0.60 | 0.60 | 0.60 | 0.60 | 0.60 | 0.60 |
| | 59°F(15.0°C) | TC | 9935 | 10006 | 10360 | 10421 | 10836 | 10557 | 10562 | 10578 | 10587 | 10850 | 11006 | 11012 | 11017 | 11018 | 11044 | 11870 | 11865 | 11877 | 11879 | 11892 |
| | | S/T | 0.85 | 0.97 | 1.00 | 1.00 | 1.00 | 0.67 | 0.79 | 0.89 | 0.91 | 1.00 | 0.56 | 0.68 | 0.77 | 0.79 | 0.90 | 0.39 | 0.48 | 0.57 | 0.59 | 0.69 |
| | | PI | 0.64 | 0.64 | 0.64 | 0.64 | 0.65 | 0.64 | 0.64 | 0.64 | 0.64 | 0.65 | 0.65 | 0.65 | 0.65 | 0.65 | 0.65 | 0.65 | 0.65 | 0.65 | 0.65 | 0.65 |
| | 68°F(20.0°C) | TC | 9378 | 9536 | 9882 | 9944 | 10357 | 9992 | 9996 | 10023 | 10035 | 10370 | 10435 | 10440 | 10444 | 10444 | 10485 | 11288 | 11283 | 11294 | 11297 | 11306 |
| | | S/T | 0.87 | 1.00 | 1.00 | 1.00 | 1.00 | 0.69 | 0.81 | 0.91 | 0.93 | 1.00 | 0.57 | 0.69 | 0.79 | 0.81 | 0.93 | 0.39 | 0.49 | 0.58 | 0.60 | 0.71 |
| | | PI | 0.69 | 0.69 | 0.69 | 0.69 | 0.70 | 0.69 | 0.69 | 0.69 | 0.69 | 0.70 | 0.70 | 0.70 | 0.70 | 0.70 | 0.70 | 0.71 | 0.71 | 0.71 | 0.71 | 0.70 |
| | 77°F(25.0°C) | TC | 8811 | 9016 | 9362 | 9423 | 9835 | 9420 | 9424 | 9461 | 9476 | 9848 | 9857 | 9865 | 9870 | 9871 | 9922 | 10703 | 10697 | 10714 | 10717 | 10729 |
| | | S/T | 0.88 | 1.00 | 1.00 | 1.00 | 1.00 | 0.69 | 0.82 | 0.93 | 0.95 | 1.00 | 0.57 | 0.70 | 0.80 | 0.82 | 0.94 | 0.39 | 0.49 | 0.59 | 0.60 | 0.72 |
| | | PI | 0.74 | 0.74 | 0.74 | 0.74 | 0.75 | 0.74 | 0.74 | 0.74 | 0.74 | 0.75 | 0.75 | 0.75 | 0.75 | 0.75 | 0.75 | 0.75 | 0.75 | 0.75 | 0.75 | 0.75 |
| | 82°F(27.8°C) | TC | 8865 | 9106 | 9465 | 9528 | 9956 | 9487 | 9492 | 9538 | 9556 | 9969 | 9938 | 9948 | 9954 | 9954 | 10017 | 10810 | 10812 | 10826 | 10829 | 10843 |
| | | S/T | 0.88 | 1.00 | 1.00 | 1.00 | 1.00 | 0.70 | 0.83 | 0.94 | 0.96 | 1.00 | 0.58 | 0.70 | 0.81 | 0.83 | 0.96 | 0.39 | 0.49 | 0.59 | 0.61 | 0.72 |
| | | PI | 0.82 | 0.83 | 0.83 | 0.83 | 0.83 | 0.83 | 0.83 | 0.83 | 0.83 | 0.83 | 0.83 | 0.83 | 0.83 | 0.83 | 0.83 | 0.84 | 0.84 | 0.84 | 0.84 | 0.84 |
| | 86°F(30.0°C) | TC | 9364 | 9660 | 10047 | 10116 | 10577 | 10027 | 10032 | 10092 | 10119 | 10591 | 10511 | 10522 | 10527 | 10528 | 10609 | 11448 | 11448 | 11465 | 11468 | 11481 |
| | | S/T | 0.90 | 1.00 | 1.00 | 1.00 | 1.00 | 0.71 | 0.84 | 0.96 | 0.98 | 1.00 | 0.58 | 0.71 | 0.82 | 0.84 | 0.97 | 0.39 | 0.50 | 0.60 | 0.61 | 0.73 |
| | | PI | 0.96 | 0.97 | 0.97 | 0.97 | 0.98 | 0.97 | 0.97 | 0.97 | 0.97 | 0.98 | 0.98 | 0.98 | 0.98 | 0.98 | 0.98 | 0.99 | 0.99 | 0.99 | 0.99 | 0.99 |
| | 95°F(35.0°C) | TC | 10624 | 10626 | 10684 | 10712 | 11153 | 11318 | 11317 | 11320 | 11320 | 11340 | 11817 | 11817 | 11817 | 11817 | 11823 | 12781 | 12776 | 12772 | 12778 | 12775 |
| | | S/T | 0.77 | 0.87 | 0.96 | 0.98 | 1.00 | 0.63 | 0.72 | 0.80 | 0.82 | 0.91 | 0.53 | 0.62 | 0.70 | 0.72 | 0.81 | 0.39 | 0.46 | 0.53 | 0.55 | 0.63 |
| | | PI | 1.24 | 1.24 | 1.24 | 1.24 | 1.27 | 1.28 | 1.28 | 1.28 | 1.28 | 1.28 | 1.30 | 1.30 | 1.30 | 1.30 | 1.30 | 1.36 | 1.36 | 1.36 | 1.36 | 1.36 |
| | 104°F(40.0°C) | TC | 9769 | 9770 | 9871 | 9962 | 10355 | 10406 | 10406 | 10409 | 10409 | 10446 | 10866 | 10866 | 10866 | 10867 | 10872 | 11749 | 11745 | 11741 | 11745 | 11744 |
| | | S/T | 0.79 | 0.89 | 0.99 | 1.00 | 1.00 | 0.63 | 0.74 | 0.82 | 0.84 | 0.94 | 0.54 | 0.64 | 0.72 | 0.73 | 0.83 | 0.39 | 0.46 | 0.54 | 0.55 | 0.65 |
| | | PI | 1.23 | 1.23 | 1.23 | 1.24 | 1.26 | 1.27 | 1.27 | 1.27 | 1.27 | 1.27 | 1.29 | 1.29 | 1.29 | 1.29 | 1.29 | 1.35 | 1.35 | 1.35 | 1.35 | 1.35 |
| | 110°F(43.0°C) | TC | 9196 | 9266 | 9623 | 9685 | 10099 | 9831 | 9835 | 9843 | 9852 | 10113 | 10292 | 10292 | 10296 | 10297 | 10315 | 11172 | 11168 | 11168 | 11169 | 11178 |
| | | S/T | 0.85 | 0.97 | 1.00 | 1.00 | 1.00 | 0.67 | 0.79 | 0.89 | 0.91 | 1.00 | 0.56 | 0.68 | 0.77 | 0.79 | 0.90 | 0.39 | 0.48 | 0.57 | 0.59 | 0.69 |
| | | PI | 1.24 | 1.24 | 1.26 | 1.26 | 1.28 | 1.27 | 1.27 | 1.27 | 1.27 | 1.28 | 1.29 | 1.29 | 1.29 | 1.29 | 1.29 | 1.33 | 1.33 | 1.33 | 1.33 | 1.33 |
| | 115°F(46.0°C) | TC | 8074 | 8247 | 8569 | 8625 | 9006 | 8650 | 8652 | 8676 | 8688 | 9018 | 9065 | 9067 | 9070 | 9070 | 9104 | 9861 | 9856 | 9860 | 9862 | 9869 |
| | | S/T | 0.88 | 1.00 | 1.00 | 1.00 | 1.00 | 0.69 | 0.82 | 0.92 | 0.94 | 1.00 | 0.57 | 0.69 | 0.80 | 0.82 | 0.94 | 0.39 | 0.49 | 0.58 | 0.60 | 0.71 |
| | | PI | 1.10 | 1.11 | 1.12 | 1.12 | 1.14 | 1.12 | 1.12 | 1.12 | 1.12 | 1.14 | 1.14 | 1.14 | 1.14 | 1.14 | 1.14 | 1.17 | 1.17 | 1.17 | 1.17 | 1.17 |
| | 122°F(50.0°C) | TC | 6599 | 6971 | 7279 | 7334 | 7700 | 7045 | 7063 | 7288 | 7343 | 7709 | 7421 | 7423 | 7435 | 7443 | 7716 | 8139 | 8142 | 8149 | 8149 | 8148 |
| | | S/T | 1.00 | 1.00 | 1.00 | 1.00 | 1.00 | 0.76 | 0.92 | 1.00 | 1.00 | 1.00 | 0.62 | 0.77 | 0.89 | 0.92 | 1.00 | 0.40 | 0.52 | 0.64 | 0.66 | 0.79 |
| | | PI | 0.92 | 0.93 | 0.94 | 0.94 | 0.95 | 0.93 | 0.93 | 0.94 | 0.94 | 0.95 | 0.94 | 0.94 | 0.94 | 0.94 | 0.95 | 0.96 | 0.96 | 0.96 | 0.96 | 0.96 |

## Table 7 – 9K Cooling Performance (Continued)

| AIRFLOW (CFM) | OUTDOOR DB (°F) | ID WB (°F) | 60.8°F(16.0°C) | | | | | 64.4°F(18.0°C) | | | | | 67°F(19.4°C) | | | | | 71.6°F(22.0°C) | | | | |
|---|---|---|---|---|---|---|---|---|---|---|---|---|---|---|---|---|---|---|---|---|---|---|
| | | ID DB °F °C | 73.4°F 23.0°C | 77.0°F 25.0°C | 80.0°F 26.7°C | 80.6°F 27.0°C | 84.2°F 29.0°C | 73.4°F 23.0°C | 77.0°F 25.0°C | 80.0°F 26.7°C | 80.6°F 27.0°C | 84.2°F 29.0°C | 73.4°F 23.0°C | 77.0°F 25.0°C | 80.0°F 26.7°C | 80.6°F 27.0°C | 84.2°F 29.0°C | 73.4°F 23.0°C | 77.0°F 25.0°C | 80.0°F 26.7°C | 80.6°F 27.0°C | 84.2°F 29.0°C |
| 294 | 5°F(-15.0°C) | TC | 11441 | 11452 | 11606 | 11659 | 12016 | 11985 | 11988 | 11989 | 11989 | 12048 | 12377 | 12376 | 12380 | 12380 | 12382 | 13117 | 13113 | 13113 | 13114 | 13122 |
| | | S/T | 0.79 | 0.90 | 1.00 | 1.00 | 1.00 | 0.64 | 0.75 | 0.84 | 0.85 | 0.96 | 0.54 | 0.65 | 0.73 | 0.75 | 0.85 | 0.39 | 0.47 | 0.55 | 0.57 | 0.66 |
| | | PI | 0.64 | 0.64 | 0.64 | 0.64 | 0.64 | 0.64 | 0.64 | 0.64 | 0.64 | 0.64 | 0.64 | 0.64 | 0.64 | 0.64 | 0.64 | 0.66 | 0.66 | 0.66 | 0.66 | 0.66 |
| | 14°F(-10.0°C) | TC | 11553 | 11549 | 11596 | 11698 | 12061 | 12133 | 12126 | 12120 | 12119 | 12113 | 12552 | 12546 | 12536 | 12535 | 12524 | 13341 | 13337 | 13328 | 13325 | 13304 |
| | | S/T | 0.78 | 0.89 | 0.99 | 1.00 | 1.00 | 0.64 | 0.74 | 0.82 | 0.84 | 0.94 | 0.54 | 0.64 | 0.72 | 0.74 | 0.83 | 0.39 | 0.47 | 0.55 | 0.56 | 0.65 |
| | | PI | 0.61 | 0.61 | 0.61 | 0.61 | 0.61 | 0.61 | 0.61 | 0.61 | 0.61 | 0.61 | 0.61 | 0.61 | 0.61 | 0.61 | 0.61 | 0.61 | 0.61 | 0.61 | 0.61 | 0.61 |
| | 17°F(-8.3°C) | TC | 11604 | 11607 | 11750 | 11817 | 12198 | 12187 | 12188 | 12191 | 12191 | 12249 | 12576 | 12581 | 12589 | 12589 | 12592 | 13412 | 13408 | 13409 | 13412 | 13424 |
| | | S/T | 0.79 | 0.89 | 1.00 | 1.00 | 1.00 | 0.64 | 0.74 | 0.83 | 0.85 | 0.95 | 0.55 | 0.65 | 0.73 | 0.75 | 0.85 | 0.39 | 0.47 | 0.55 | 0.57 | 0.66 |
| | | PI | 0.60 | 0.60 | 0.60 | 0.60 | 0.59 | 0.59 | 0.59 | 0.59 | 0.59 | 0.59 | 0.59 | 0.59 | 0.59 | 0.59 | 0.59 | 0.60 | 0.60 | 0.60 | 0.60 | 0.60 |
| | 23°F(-5.0°C) | TC | 11293 | 11309 | 11493 | 11549 | 11927 | 11873 | 11876 | 11877 | 11878 | 11948 | 12291 | 12291 | 12295 | 12295 | 12297 | 13084 | 13080 | 13080 | 13082 | 13091 |
| | | S/T | 0.80 | 0.91 | 1.00 | 1.00 | 1.00 | 0.65 | 0.75 | 0.84 | 0.86 | 0.97 | 0.54 | 0.65 | 0.74 | 0.75 | 0.85 | 0.39 | 0.47 | 0.56 | 0.57 | 0.66 |
| | | PI | 0.65 | 0.65 | 0.65 | 0.65 | 0.65 | 0.65 | 0.65 | 0.65 | 0.65 | 0.65 | 0.66 | 0.66 | 0.66 | 0.66 | 0.66 | 0.67 | 0.67 | 0.67 | 0.67 | 0.67 |
| | 35°F(1.7°C) | TC | 10825 | 10825 | 10846 | 10858 | 11137 | 11344 | 11343 | 11343 | 11344 | 11344 | 11709 | 11708 | 11707 | 11707 | 11708 | 12387 | 12384 | 12381 | 12383 | 12381 |
| | | S/T | 0.75 | 0.85 | 0.93 | 0.94 | 1.00 | 0.62 | 0.71 | 0.79 | 0.80 | 0.89 | 0.53 | 0.62 | 0.69 | 0.71 | 0.80 | 0.39 | 0.46 | 0.53 | 0.54 | 0.63 |
| | | PI | 0.71 | 0.71 | 0.71 | 0.71 | 0.73 | 0.75 | 0.75 | 0.75 | 0.75 | 0.75 | 0.78 | 0.78 | 0.78 | 0.78 | 0.78 | 0.85 | 0.85 | 0.85 | 0.85 | 0.85 |
| | 41°F(5.0°C) | TC | 11022 | 11022 | 11053 | 11068 | 11382 | 11548 | 11547 | 11547 | 11548 | 11558 | 11918 | 11917 | 11916 | 11916 | 11917 | 12604 | 12601 | 12598 | 12600 | 12598 |
| | | S/T | 0.76 | 0.86 | 0.94 | 0.96 | 1.00 | 0.62 | 0.72 | 0.80 | 0.81 | 0.90 | 0.53 | 0.62 | 0.70 | 0.71 | 0.81 | 0.39 | 0.46 | 0.53 | 0.55 | 0.64 |
| | | PI | 0.61 | 0.61 | 0.62 | 0.62 | 0.64 | 0.65 | 0.65 | 0.65 | 0.65 | 0.65 | 0.68 | 0.68 | 0.68 | 0.68 | 0.68 | 0.74 | 0.74 | 0.74 | 0.74 | 0.74 |
| | 47°F(8.3°C) | TC | 11219 | 11219 | 11262 | 11282 | 11629 | 11752 | 11751 | 11751 | 11751 | 11769 | 12127 | 12125 | 12125 | 12125 | 12125 | 12823 | 12819 | 12819 | 12818 | 12816 |
| | | S/T | 0.77 | 0.87 | 0.95 | 0.97 | 1.00 | 0.63 | 0.72 | 0.81 | 0.82 | 0.91 | 0.53 | 0.63 | 0.71 | 0.72 | 0.82 | 0.39 | 0.46 | 0.54 | 0.55 | 0.64 |
| | | PI | 0.52 | 0.52 | 0.53 | 0.53 | 0.55 | 0.56 | 0.56 | 0.56 | 0.56 | 0.56 | 0.58 | 0.58 | 0.58 | 0.58 | 0.58 | 0.64 | 0.64 | 0.64 | 0.64 | 0.64 |
| | 50°F(10.0°C) | TC | 10819 | 10996 | 11363 | 11428 | 11866 | 11455 | 11461 | 11499 | 11513 | 11880 | 11906 | 11921 | 11928 | 11929 | 11982 | 12763 | 12770 | 12801 | 12804 | 12821 |
| | | S/T | 0.87 | 1.00 | 1.00 | 1.00 | 1.00 | 0.69 | 0.81 | 0.92 | 0.94 | 1.00 | 0.57 | 0.69 | 0.80 | 0.81 | 0.93 | 0.39 | 0.49 | 0.58 | 0.60 | 0.71 |
| | | PI | 0.60 | 0.60 | 0.60 | 0.60 | 0.60 | 0.60 | 0.60 | 0.60 | 0.60 | 0.60 | 0.60 | 0.60 | 0.60 | 0.60 | 0.60 | 0.60 | 0.60 | 0.60 | 0.60 | 0.60 |
| | 59°F(15.0°C) | TC | 10245 | 10491 | 10860 | 10926 | 11365 | 10870 | 10875 | 10929 | 10950 | 11379 | 11321 | 11333 | 11338 | 11338 | 11413 | 12186 | 12189 | 12213 | 12216 | 12228 |
| | | S/T | 0.88 | 1.00 | 1.00 | 1.00 | 1.00 | 0.70 | 0.83 | 0.94 | 0.97 | 1.00 | 0.58 | 0.71 | 0.81 | 0.83 | 0.96 | 0.39 | 0.50 | 0.59 | 0.61 | 0.73 |
| | | PI | 0.65 | 0.65 | 0.65 | 0.65 | 0.65 | 0.65 | 0.65 | 0.65 | 0.65 | 0.65 | 0.65 | 0.65 | 0.65 | 0.65 | 0.65 | 0.66 | 0.66 | 0.66 | 0.66 | 0.66 |
| | 68°F(20.0°C) | TC | 9683 | 9995 | 10363 | 10429 | 10867 | 10288 | 10291 | 10372 | 10440 | 10879 | 10736 | 10745 | 10748 | 10748 | 10871 | 11593 | 11596 | 11615 | 11617 | 11625 |
| | | S/T | 0.91 | 1.00 | 1.00 | 1.00 | 1.00 | 0.72 | 0.85 | 0.97 | 1.00 | 1.00 | 0.59 | 0.72 | 0.84 | 0.86 | 0.99 | 0.40 | 0.50 | 0.61 | 0.62 | 0.75 |
| | | PI | 0.69 | 0.70 | 0.70 | 0.70 | 0.70 | 0.70 | 0.70 | 0.70 | 0.70 | 0.70 | 0.70 | 0.70 | 0.70 | 0.70 | 0.70 | 0.71 | 0.71 | 0.71 | 0.71 | 0.71 |
| | 77°F(25.0°C) | TC | 9107 | 9455 | 9822 | 9887 | 10324 | 9699 | 9703 | 9815 | 9899 | 10336 | 10141 | 10153 | 10158 | 10170 | 10346 | 10984 | 10994 | 11018 | 11021 | 11033 |
| | | S/T | 0.92 | 1.00 | 1.00 | 1.00 | 1.00 | 0.72 | 0.87 | 0.99 | 1.00 | 1.00 | 0.59 | 0.73 | 0.85 | 0.86 | 1.00 | 0.40 | 0.51 | 0.61 | 0.63 | 0.76 |
| | | PI | 0.74 | 0.75 | 0.75 | 0.75 | 0.76 | 0.75 | 0.75 | 0.75 | 0.75 | 0.76 | 0.75 | 0.75 | 0.75 | 0.75 | 0.76 | 0.76 | 0.76 | 0.76 | 0.76 | 0.76 |
| | 82°F(27.8°C) | TC | 9163 | 9551 | 9932 | 10000 | 10454 | 9768 | 9784 | 9944 | 10012 | 10466 | 10225 | 10238 | 10243 | 10259 | 10476 | 11090 | 11105 | 11132 | 11136 | 11149 |
| | | S/T | 0.94 | 1.00 | 1.00 | 1.00 | 1.00 | 0.73 | 0.87 | 1.00 | 1.00 | 1.00 | 0.60 | 0.74 | 0.86 | 0.87 | 1.00 | 0.40 | 0.51 | 0.62 | 0.63 | 0.76 |
| | | PI | 0.83 | 0.84 | 0.84 | 0.84 | 0.84 | 0.84 | 0.84 | 0.84 | 0.84 | 0.84 | 0.84 | 0.84 | 0.84 | 0.84 | 0.84 | 0.85 | 0.85 | 0.85 | 0.85 | 0.85 |
| | 86°F(30.0°C) | TC | 9673 | 10121 | 10532 | 10604 | 11098 | 10312 | 10333 | 10544 | 10617 | 11107 | 10804 | 10816 | 10833 | 10843 | 11117 | 11732 | 11749 | 11777 | 11780 | 11792 |
| | | S/T | 0.95 | 1.00 | 1.00 | 1.00 | 1.00 | 0.74 | 0.88 | 1.00 | 1.00 | 1.00 | 0.60 | 0.75 | 0.86 | 0.88 | 1.00 | 0.40 | 0.51 | 0.62 | 0.64 | 0.77 |
| | | PI | 0.97 | 0.98 | 0.98 | 0.99 | 0.99 | 0.98 | 0.98 | 0.98 | 0.99 | 0.99 | 0.99 | 0.99 | 0.99 | 0.99 | 0.99 | 1.00 | 1.00 | 1.00 | 1.00 | 1.00 |
| | 95°F(35.0°C) | TC | 10950 | 10970 | 11205 | 11271 | 11713 | 11651 | 11653 | 11657 | 11658 | 11737 | 12154 | 12155 | 12161 | 12162 | 12167 | 13120 | 13115 | 13117 | 13116 | 13126 |
| | | S/T | 0.80 | 0.91 | 1.00 | 1.00 | 1.00 | 0.65 | 0.75 | 0.84 | 0.86 | 0.96 | 0.54 | 0.65 | 0.73 | 0.75 | 0.85 | 0.39 | 0.47 | 0.55 | 0.56 | 0.66 |
| | | PI | 1.25 | 1.25 | 1.26 | 1.27 | 1.29 | 1.29 | 1.29 | 1.29 | 1.29 | 1.29 | 1.32 | 1.32 | 1.32 | 1.32 | 1.32 | 1.37 | 1.37 | 1.37 | 1.37 | 1.37 |
| | 104°F(40.0°C) | TC | 10068 | 10104 | 10395 | 10456 | 10871 | 10712 | 10716 | 10719 | 10719 | 10860 | 11175 | 11177 | 11183 | 11184 | 11187 | 12063 | 12059 | 12061 | 12059 | 12071 |
| | | S/T | 0.82 | 0.94 | 1.00 | 1.00 | 1.00 | 0.66 | 0.77 | 0.86 | 0.88 | 1.00 | 0.55 | 0.66 | 0.75 | 0.77 | 0.87 | 0.39 | 0.47 | 0.56 | 0.58 | 0.67 |
| | | PI | 1.24 | 1.24 | 1.26 | 1.26 | 1.29 | 1.28 | 1.28 | 1.28 | 1.28 | 1.29 | 1.31 | 1.31 | 1.31 | 1.31 | 1.31 | 1.36 | 1.36 | 1.36 | 1.36 | 1.36 |
| | 110°F(43.0°C) | TC | 9477 | 9733 | 10102 | 10168 | 10605 | 10124 | 10128 | 10172 | 10191 | 10616 | 10586 | 10593 | 10596 | 10596 | 10658 | 11475 | 11470 | 11482 | 11484 | 11492 |
| | | S/T | 0.89 | 1.00 | 1.00 | 1.00 | 1.00 | 0.70 | 0.83 | 0.94 | 0.96 | 1.00 | 0.58 | 0.70 | 0.81 | 0.83 | 0.96 | 0.39 | 0.49 | 0.59 | 0.61 | 0.73 |
| | | PI | 1.25 | 1.26 | 1.28 | 1.28 | 1.30 | 1.28 | 1.28 | 1.28 | 1.28 | 1.30 | 1.30 | 1.30 | 1.30 | 1.30 | 1.30 | 1.34 | 1.34 | 1.34 | 1.34 | 1.34 |
| | 115°F(46.0°C) | TC | 8331 | 8645 | 8985 | 9045 | 9448 | 8899 | 8901 | 8978 | 9056 | 9459 | 9323 | 9332 | 9334 | 9334 | 9468 | 10118 | 10113 | 10129 | 10131 | 10136 |
| | | S/T | 0.92 | 1.00 | 1.00 | 1.00 | 1.00 | 0.72 | 0.86 | 0.98 | 1.00 | 1.00 | 0.59 | 0.73 | 0.84 | 0.86 | 1.00 | 0.40 | 0.50 | 0.61 | 0.63 | 0.75 |
| | | PI | 1.11 | 1.12 | 1.13 | 1.13 | 1.15 | 1.13 | 1.13 | 1.13 | 1.13 | 1.15 | 1.15 | 1.15 | 1.15 | 1.15 | 1.15 | 1.18 | 1.18 | 1.18 | 1.18 | 1.18 |
| | 122°F(50.0°C) | TC | 6908 | 7287 | 7611 | 7669 | 8054 | 7228 | 7285 | 7620 | 7678 | 8062 | 7612 | 7612 | 7652 | 7674 | 8069 | 8331 | 8347 | 8352 | 8352 | 8347 |
| | | S/T | 1.00 | 1.00 | 1.00 | 1.00 | 1.00 | 0.80 | 0.98 | 1.00 | 1.00 | 1.00 | 0.64 | 0.81 | 0.95 | 0.98 | 1.00 | 0.41 | 0.54 | 0.67 | 0.69 | 0.84 |
| | | PI | 0.93 | 0.94 | 0.95 | 0.95 | 0.96 | 0.94 | 0.94 | 0.95 | 0.95 | 0.96 | 0.95 | 0.95 | 0.95 | 0.95 | 0.96 | 0.97 | 0.97 | 0.97 | 0.97 | 0.96 |

## Table 7 – 9K Cooling Performance (Continued)

| AIRFLOW (CFM) | OUTDOOR DB (°F) | ID WB (°F) | 60.8°F(16.0°C) | | | | | 64.4°F(18.0°C) | | | | | 67°F(19.4°C) | | | | | 71.6°F(22.0°C) | | | | |
|---|---|---|---|---|---|---|---|---|---|---|---|---|---|---|---|---|---|---|---|---|---|---|
| | | ID DB °F °C | 73.4°F 23.0°C | 77.0°F 25.0°C | 80.0°F 26.7°C | 80.6°F 27.0°C | 84.2°F 29.0°C | 73.4°F 23.0°C | 77.0°F 25.0°C | 80.0°F 26.7°C | 80.6°F 27.0°C | 84.2°F 29.0°C | 73.4°F 23.0°C | 77.0°F 25.0°C | 80.0°F 26.7°C | 80.6°F 27.0°C | 84.2°F 29.0°C | 73.4°F 23.0°C | 77.0°F 25.0°C | 80.0°F 26.7°C | 80.6°F 27.0°C | 84.2°F 29.0°C |
| 312 | 5°F(-15.0°C) | TC | 11787 | 11828 | 12098 | 12154 | 12528 | 12340 | 12343 | 12344 | 12357 | 12541 | 12734 | 12738 | 12740 | 12741 | 12758 | 13481 | 13477 | 13484 | 13486 | 13492 |
| | | S/T | 0.82 | 0.94 | 1.00 | 1.00 | 1.00 | 0.66 | 0.78 | 0.87 | 0.88 | 1.00 | 0.56 | 0.67 | 0.76 | 0.78 | 0.88 | 0.39 | 0.48 | 0.57 | 0.59 | 0.69 |
| | | PI | 0.65 | 0.65 | 0.65 | 0.65 | 0.65 | 0.65 | 0.65 | 0.65 | 0.65 | 0.65 | 0.66 | 0.66 | 0.66 | 0.66 | 0.66 | 0.67 | 0.67 | 0.67 | 0.67 | 0.67 |
| | 14°F(-10.0°C) | TC | 11911 | 11905 | 12148 | 12205 | 12584 | 12503 | 12492 | 12483 | 12482 | 12599 | 12931 | 12915 | 12902 | 12900 | 12887 | 13750 | 13745 | 13719 | 13714 | 13685 |
| | | S/T | 0.81 | 0.93 | 1.00 | 1.00 | 1.00 | 0.65 | 0.76 | 0.86 | 0.87 | 1.00 | 0.55 | 0.66 | 0.75 | 0.76 | 0.87 | 0.39 | 0.48 | 0.56 | 0.57 | 0.67 |
| | | PI | 0.62 | 0.62 | 0.62 | 0.62 | 0.62 | 0.62 | 0.62 | 0.62 | 0.62 | 0.62 | 0.62 | 0.62 | 0.62 | 0.62 | 0.62 | 0.62 | 0.62 | 0.62 | 0.62 | 0.62 |
| | 17°F(-8.3°C) | TC | 11925 | 11963 | 12240 | 12300 | 12699 | 12518 | 12523 | 12526 | 12536 | 12713 | 12945 | 12950 | 12955 | 12956 | 12972 | 13768 | 13764 | 13762 | 13764 | 13776 |
| | | S/T | 0.82 | 0.93 | 1.00 | 1.00 | 1.00 | 0.66 | 0.77 | 0.87 | 0.88 | 1.00 | 0.55 | 0.66 | 0.76 | 0.77 | 0.87 | 0.39 | 0.48 | 0.57 | 0.58 | 0.68 |
| | | PI | 0.61 | 0.61 | 0.61 | 0.61 | 0.61 | 0.60 | 0.61 | 0.61 | 0.61 | 0.61 | 0.61 | 0.61 | 0.61 | 0.61 | 0.61 | 0.61 | 0.61 | 0.61 | 0.61 | 0.61 |
| | 23°F(-5.0°C) | TC | 11634 | 11685 | 11987 | 12046 | 12443 | 12224 | 12227 | 12229 | 12245 | 12456 | 12645 | 12650 | 12653 | 12653 | 12674 | 13446 | 13442 | 13451 | 13453 | 13461 |
| | | S/T | 0.83 | 0.95 | 1.00 | 1.00 | 1.00 | 0.66 | 0.78 | 0.88 | 0.89 | 1.00 | 0.56 | 0.67 | 0.76 | 0.78 | 0.89 | 0.39 | 0.48 | 0.57 | 0.59 | 0.69 |
| | | PI | 0.66 | 0.66 | 0.66 | 0.66 | 0.67 | 0.66 | 0.66 | 0.66 | 0.66 | 0.67 | 0.67 | 0.67 | 0.67 | 0.67 | 0.67 | 0.68 | 0.68 | 0.68 | 0.68 | 0.68 |
| | 35°F(1.7°C) | TC | 11161 | 11161 | 11227 | 11258 | 11621 | 11682 | 11682 | 11683 | 11683 | 11714 | 12048 | 12047 | 12048 | 12048 | 12049 | 12726 | 12723 | 12723 | 12722 | 12723 |
| | | S/T | 0.78 | 0.88 | 0.97 | 0.99 | 1.00 | 0.63 | 0.73 | 0.82 | 0.83 | 0.93 | 0.54 | 0.63 | 0.72 | 0.73 | 0.83 | 0.39 | 0.46 | 0.54 | 0.56 | 0.65 |
| | | PI | 0.72 | 0.72 | 0.72 | 0.73 | 0.76 | 0.76 | 0.76 | 0.76 | 0.76 | 0.76 | 0.79 | 0.79 | 0.80 | 0.80 | 0.80 | 0.86 | 0.86 | 0.86 | 0.86 | 0.86 |
| | 41°F(5.0°C) | TC | 11363 | 11364 | 11454 | 11534 | 11875 | 11892 | 11892 | 11892 | 11892 | 11934 | 12263 | 12262 | 12263 | 12263 | 12264 | 12951 | 12948 | 12947 | 12946 | 12948 |
| | | S/T | 0.78 | 0.89 | 0.98 | 1.00 | 1.00 | 0.64 | 0.74 | 0.83 | 0.84 | 0.94 | 0.54 | 0.64 | 0.72 | 0.74 | 0.84 | 0.39 | 0.47 | 0.55 | 0.56 | 0.66 |
| | | PI | 0.63 | 0.63 | 0.63 | 0.64 | 0.66 | 0.67 | 0.67 | 0.67 | 0.67 | 0.67 | 0.70 | 0.70 | 0.70 | 0.70 | 0.70 | 0.76 | 0.76 | 0.76 | 0.76 | 0.76 |
| | 47°F(8.3°C) | TC | 11566 | 11574 | 11729 | 11781 | 12130 | 12102 | 12102 | 12102 | 12102 | 12158 | 12478 | 12477 | 12478 | 12478 | 12478 | 13177 | 13173 | 13172 | 13172 | 13173 |
| | | S/T | 0.79 | 0.90 | 1.00 | 1.00 | 1.00 | 0.64 | 0.75 | 0.84 | 0.85 | 0.96 | 0.54 | 0.65 | 0.73 | 0.75 | 0.85 | 0.39 | 0.47 | 0.55 | 0.57 | 0.67 |
| | | PI | 0.53 | 0.53 | 0.54 | 0.55 | 0.57 | 0.57 | 0.57 | 0.57 | 0.57 | 0.57 | 0.60 | 0.60 | 0.60 | 0.60 | 0.60 | 0.65 | 0.65 | 0.65 | 0.65 | 0.65 |
| | 50°F(10.0°C) | TC | 11163 | 11470 | 11857 | 11926 | 12388 | 11793 | 11799 | 11881 | 11918 | 12400 | 12253 | 12269 | 12275 | 12276 | 12394 | 13097 | 13132 | 13166 | 13170 | 13186 |
| | | S/T | 0.90 | 1.00 | 1.00 | 1.00 | 1.00 | 0.71 | 0.85 | 0.96 | 0.99 | 1.00 | 0.59 | 0.72 | 0.83 | 0.85 | 0.99 | 0.40 | 0.50 | 0.60 | 0.62 | 0.74 |
| | | PI | 0.61 | 0.61 | 0.61 | 0.61 | 0.61 | 0.61 | 0.61 | 0.61 | 0.61 | 0.61 | 0.61 | 0.61 | 0.61 | 0.61 | 0.61 | 0.61 | 0.61 | 0.61 | 0.61 | 0.61 |
| | 59°F(15.0°C) | TC | 10577 | 10948 | 11336 | 11405 | 11869 | 11191 | 11206 | 11333 | 11418 | 11881 | 11652 | 11664 | 11668 | 11685 | 11891 | 12512 | 12537 | 12562 | 12565 | 12576 |
| | | S/T | 0.92 | 1.00 | 1.00 | 1.00 | 1.00 | 0.73 | 0.86 | 1.00 | 1.00 | 1.00 | 0.60 | 0.73 | 0.85 | 0.86 | 1.00 | 0.40 | 0.51 | 0.61 | 0.63 | 0.76 |
| | | PI | 0.66 | 0.66 | 0.66 | 0.66 | 0.67 | 0.66 | 0.66 | 0.66 | 0.66 | 0.67 | 0.67 | 0.67 | 0.66 | 0.67 | 0.67 | 0.67 | 0.67 | 0.67 | 0.67 | 0.67 |
| | 68°F(20.0°C) | TC | 9990 | 10416 | 10802 | 10871 | 11332 | 10576 | 10599 | 10814 | 10883 | 11343 | 11033 | 11041 | 11061 | 11071 | 11353 | 11888 | 11910 | 11929 | 11930 | 11937 |
| | | S/T | 0.95 | 1.00 | 1.00 | 1.00 | 1.00 | 0.74 | 0.89 | 1.00 | 1.00 | 1.00 | 0.61 | 0.75 | 0.87 | 0.89 | 1.00 | 0.40 | 0.51 | 0.63 | 0.65 | 0.78 |
| | | PI | 0.71 | 0.71 | 0.71 | 0.71 | 0.72 | 0.71 | 0.71 | 0.71 | 0.71 | 0.72 | 0.72 | 0.72 | 0.72 | 0.72 | 0.72 | 0.73 | 0.73 | 0.73 | 0.73 | 0.73 |
| | 77°F(25.0°C) | TC | 9399 | 9852 | 10237 | 10305 | 10766 | 9964 | 9996 | 10248 | 10317 | 10777 | 10415 | 10427 | 10454 | 10465 | 10786 | 11249 | 11283 | 11309 | 11312 | 11323 |
| | | S/T | 0.97 | 1.00 | 1.00 | 1.00 | 1.00 | 0.75 | 0.90 | 1.00 | 1.00 | 1.00 | 0.61 | 0.76 | 0.88 | 0.90 | 1.00 | 0.40 | 0.52 | 0.63 | 0.65 | 0.79 |
| | | PI | 0.76 | 0.76 | 0.77 | 0.77 | 0.77 | 0.76 | 0.76 | 0.77 | 0.77 | 0.77 | 0.77 | 0.77 | 0.77 | 0.77 | 0.77 | 0.78 | 0.78 | 0.78 | 0.78 | 0.78 |
| | 82°F(27.8°C) | TC | 9464 | 9948 | 10349 | 10419 | 10896 | 10029 | 10068 | 10358 | 10431 | 10907 | 10496 | 10509 | 10542 | 10555 | 10917 | 11348 | 11391 | 11421 | 11424 | 11436 |
| | | S/T | 0.99 | 1.00 | 1.00 | 1.00 | 1.00 | 0.76 | 0.91 | 1.00 | 1.00 | 1.00 | 0.62 | 0.77 | 0.89 | 0.92 | 1.00 | 0.40 | 0.52 | 0.64 | 0.66 | 0.80 |
| | | PI | 0.85 | 0.85 | 0.86 | 0.86 | 0.86 | 0.85 | 0.85 | 0.86 | 0.86 | 0.86 | 0.86 | 0.86 | 0.86 | 0.86 | 0.86 | 0.87 | 0.87 | 0.87 | 0.87 | 0.87 |
| | 86°F(30.0°C) | TC | 10045 | 10547 | 10978 | 11055 | 11569 | 10594 | 10642 | 10990 | 11067 | 11581 | 11095 | 11108 | 11149 | 11165 | 11591 | 12012 | 12059 | 12087 | 12090 | 12101 |
| | | S/T | 1.00 | 1.00 | 1.00 | 1.00 | 1.00 | 0.77 | 0.93 | 1.00 | 1.00 | 1.00 | 0.62 | 0.78 | 0.91 | 0.93 | 1.00 | 0.40 | 0.52 | 0.64 | 0.66 | 0.81 |
| | | PI | 0.99 | 1.00 | 1.00 | 1.01 | 1.01 | 1.00 | 1.00 | 1.01 | 1.01 | 1.01 | 1.01 | 1.01 | 1.01 | 1.01 | 1.01 | 1.02 | 1.02 | 1.02 | 1.02 | 1.02 |
| | 95°F(35.0°C) | TC | 11282 | 11343 | 11709 | 11779 | 12244 | 11990 | 11997 | 12001 | 12015 | 12260 | 12505 | 12507 | 12515 | 12516 | 12537 | 13475 | 13469 | 13472 | 13476 | 13494 |
| | | S/T | 0.83 | 0.95 | 1.00 | 1.00 | 1.00 | 0.66 | 0.78 | 0.88 | 0.89 | 1.00 | 0.56 | 0.67 | 0.76 | 0.78 | 0.88 | 0.39 | 0.48 | 0.57 | 0.58 | 0.68 |
| | | PI | 1.27 | 1.28 | 1.30 | 1.30 | 1.33 | 1.31 | 1.31 | 1.31 | 1.31 | 1.33 | 1.34 | 1.34 | 1.34 | 1.34 | 1.34 | 1.40 | 1.40 | 1.40 | 1.40 | 1.40 |
| | 104°F(40.0°C) | TC | 10374 | 10469 | 10863 | 10928 | 11364 | 11027 | 11034 | 11053 | 11065 | 11378 | 11498 | 11503 | 11509 | 11509 | 11542 | 12393 | 12388 | 12394 | 12398 | 12411 |
| | | S/T | 0.85 | 0.98 | 1.00 | 1.00 | 1.00 | 0.68 | 0.80 | 0.90 | 0.92 | 1.00 | 0.56 | 0.68 | 0.78 | 0.80 | 0.91 | 0.39 | 0.48 | 0.58 | 0.59 | 0.70 |
| | | PI | 1.26 | 1.27 | 1.29 | 1.30 | 1.32 | 1.30 | 1.30 | 1.30 | 1.30 | 1.32 | 1.33 | 1.33 | 1.33 | 1.33 | 1.33 | 1.39 | 1.39 | 1.38 | 1.39 | 1.39 |
| | 110°F(43.0°C) | TC | 9791 | 10168 | 10555 | 10624 | 11084 | 10424 | 10427 | 10544 | 10636 | 11096 | 10894 | 10902 | 10905 | 10913 | 11105 | 11791 | 11792 | 11810 | 11812 | 11819 |
| | | S/T | 0.92 | 1.00 | 1.00 | 1.00 | 1.00 | 0.72 | 0.87 | 0.99 | 1.00 | 1.00 | 0.60 | 0.73 | 0.85 | 0.86 | 1.00 | 0.40 | 0.51 | 0.61 | 0.63 | 0.76 |
| | | PI | 1.27 | 1.29 | 1.31 | 1.31 | 1.33 | 1.30 | 1.30 | 1.31 | 1.31 | 1.33 | 1.32 | 1.32 | 1.32 | 1.32 | 1.33 | 1.37 | 1.37 | 1.37 | 1.37 | 1.37 |
| | 115°F(46.0°C) | TC | 8614 | 9029 | 9385 | 9455 | 9872 | 9160 | 9178 | 9396 | 9467 | 9882 | 9587 | 9593 | 9606 | 9615 | 9890 | 10395 | 10403 | 10417 | 10419 | 10422 |
| | | S/T | 0.96 | 1.00 | 1.00 | 1.00 | 1.00 | 0.75 | 0.89 | 1.00 | 1.00 | 1.00 | 0.61 | 0.75 | 0.87 | 0.90 | 1.00 | 0.40 | 0.52 | 0.63 | 0.65 | 0.78 |
| | | PI | 1.13 | 1.15 | 1.16 | 1.17 | 1.18 | 1.15 | 1.15 | 1.16 | 1.17 | 1.18 | 1.17 | 1.17 | 1.17 | 1.17 | 1.18 | 1.21 | 1.21 | 1.20 | 1.20 | 1.20 |
| | 122°F(50.0°C) | TC | 7130 | 7523 | 7860 | 7919 | 8319 | 7357 | 7531 | 7869 | 7927 | 8326 | 7748 | 7746 | 7874 | 7934 | 8332 | 8460 | 8493 | 8495 | 8494 | 8505 |
| | | S/T | 1.00 | 1.00 | 1.00 | 1.00 | 1.00 | 0.84 | 1.00 | 1.00 | 1.00 | 1.00 | 0.67 | 0.85 | 1.00 | 1.00 | 1.00 | 0.41 | 0.55 | 0.69 | 0.72 | 0.88 |
| | | PI | 0.95 | 0.96 | 0.97 | 0.97 | 0.98 | 0.96 | 0.96 | 0.97 | 0.97 | 0.98 | 0.97 | 0.97 | 0.97 | 0.97 | 0.98 | 0.99 | 0.98 | 0.98 | 0.98 | 0.98 |

## Table 8 – 12K Cooling Performance

| AIRFLOW (CFM) | OUTDOOR DB (°F) | ID WB °F(C) | 60.8°F(16.0°C) | | | | | 64.4°F(18.0°C) | | | | | 67°F(19.4°C) | | | | | 71.6°F(22.0°C) | | | | |
|---|---|---|---|---|---|---|---|---|---|---|---|---|---|---|---|---|---|---|---|---|---|---|
| | | ID DB °F °C | 73.4°F 23.0°C | 77.0°F 25.0°C | 80.0°F 26.7°C | 80.6°F 27.0°C | 84.2°F 29.0°C | 73.4°F 23.0°C | 77.0°F 25.0°C | 80.0°F 26.7°C | 80.6°F 27.0°C | 84.2°F 29.0°C | 73.4°F 23.0°C | 77.0°F 25.0°C | 80.0°F 26.7°C | 80.6°F 27.0°C | 84.2°F 29.0°C | 73.4°F 23.0°C | 77.0°F 25.0°C | 80.0°F 26.7°C | 80.6°F 27.0°C | 84.2°F 29.0°C |
| 176 | 5°F(-15.0°C) | TC | 10767 | 10767 | 10767 | 10767 | 10928 | 11305 | 11303 | 11302 | 11303 | 11304 | 11691 | 11691 | 11689 | 11689 | 11690 | 12433 | 12429 | 12426 | 12426 | 12426 |
| | | S/T | 0.73 | 0.82 | 0.90 | 0.91 | 1.00 | 0.60 | 0.69 | 0.76 | 0.77 | 0.86 | 0.52 | 0.60 | 0.67 | 0.68 | 0.77 | 0.39 | 0.47 | 0.52 | 0.53 | 0.61 |
| | | PI | 0.64 | 0.64 | 0.64 | 0.64 | 0.64 | 0.64 | 0.64 | 0.64 | 0.64 | 0.64 | 0.64 | 0.64 | 0.64 | 0.64 | 0.64 | 0.65 | 0.65 | 0.65 | 0.65 | 0.65 |
| | 14°F(-10.0°C) | TC | 10865 | 10864 | 10862 | 10862 | 10915 | 11435 | 11432 | 11430 | 11430 | 11428 | 11843 | 11840 | 11837 | 11837 | 11834 | 12617 | 12613 | 12610 | 12609 | 12605 |
| | | S/T | 0.73 | 0.81 | 0.89 | 0.90 | 0.99 | 0.60 | 0.68 | 0.75 | 0.76 | 0.85 | 0.52 | 0.60 | 0.66 | 0.68 | 0.76 | 0.39 | 0.47 | 0.51 | 0.53 | 0.60 |
| | | PI | 0.61 | 0.61 | 0.61 | 0.61 | 0.61 | 0.60 | 0.60 | 0.60 | 0.60 | 0.60 | 0.60 | 0.60 | 0.60 | 0.60 | 0.60 | 0.60 | 0.60 | 0.60 | 0.60 | 0.60 |
| | 17°F(-8.3°C) | TC | 10906 | 10903 | 10902 | 10902 | 11059 | 11478 | 11475 | 11473 | 11472 | 11472 | 11888 | 11888 | 11886 | 11886 | 11888 | 12691 | 12688 | 12685 | 12684 | 12685 |
| | | S/T | 0.73 | 0.82 | 0.89 | 0.91 | 1.00 | 0.60 | 0.69 | 0.76 | 0.77 | 0.85 | 0.52 | 0.60 | 0.67 | 0.68 | 0.76 | 0.39 | 0.47 | 0.52 | 0.53 | 0.61 |
| | | PI | 0.59 | 0.59 | 0.59 | 0.59 | 0.59 | 0.59 | 0.59 | 0.59 | 0.59 | 0.59 | 0.59 | 0.59 | 0.59 | 0.59 | 0.59 | 0.59 | 0.59 | 0.59 | 0.59 | 0.59 |
| | 23°F(-5.0°C) | TC | 10628 | 10628 | 10628 | 10635 | 10829 | 11200 | 11197 | 11197 | 11198 | 11199 | 11611 | 11610 | 11609 | 11609 | 11610 | 12403 | 12399 | 12396 | 12396 | 12396 |
| | | S/T | 0.74 | 0.83 | 0.90 | 0.91 | 1.00 | 0.61 | 0.69 | 0.77 | 0.78 | 0.86 | 0.52 | 0.60 | 0.67 | 0.69 | 0.77 | 0.39 | 0.47 | 0.52 | 0.53 | 0.61 |
| | | PI | 0.65 | 0.65 | 0.65 | 0.65 | 0.65 | 0.65 | 0.65 | 0.65 | 0.65 | 0.65 | 0.65 | 0.65 | 0.65 | 0.65 | 0.65 | 0.66 | 0.66 | 0.66 | 0.66 | 0.66 |
| | 35°F(1.7°C) | TC | 10158 | 10157 | 10157 | 10156 | 10170 | 10684 | 10683 | 10682 | 10682 | 10681 | 11056 | 11054 | 11054 | 11053 | 11052 | 11753 | 11750 | 11748 | 11747 | 11747 |
| | | S/T | 0.70 | 0.78 | 0.85 | 0.86 | 0.93 | 0.59 | 0.66 | 0.72 | 0.74 | 0.81 | 0.51 | 0.58 | 0.64 | 0.65 | 0.73 | 0.39 | 0.46 | 0.50 | 0.51 | 0.58 |
| | | PI | 0.70 | 0.70 | 0.70 | 0.70 | 0.70 | 0.74 | 0.74 | 0.74 | 0.74 | 0.74 | 0.77 | 0.77 | 0.77 | 0.77 | 0.77 | 0.84 | 0.84 | 0.84 | 0.84 | 0.84 |
| | 41°F(5.0°C) | TC | 10346 | 10345 | 10345 | 10344 | 10369 | 10878 | 10877 | 10876 | 10875 | 10874 | 11254 | 11252 | 11251 | 11251 | 11249 | 11958 | 11955 | 11953 | 11953 | 11952 |
| | | S/T | 0.71 | 0.79 | 0.86 | 0.87 | 0.95 | 0.59 | 0.67 | 0.73 | 0.74 | 0.82 | 0.51 | 0.59 | 0.65 | 0.66 | 0.73 | 0.39 | 0.46 | 0.51 | 0.52 | 0.59 |
| | | PI | 0.61 | 0.61 | 0.61 | 0.61 | 0.61 | 0.65 | 0.65 | 0.65 | 0.65 | 0.65 | 0.68 | 0.68 | 0.68 | 0.68 | 0.68 | 0.74 | 0.74 | 0.74 | 0.74 | 0.74 |
| | 47°F(8.3°C) | TC | 10533 | 10532 | 10531 | 10531 | 10568 | 11071 | 11069 | 11068 | 11068 | 11067 | 11451 | 11449 | 11448 | 11448 | 11446 | 12162 | 12160 | 12157 | 12157 | 12156 |
| | | S/T | 0.71 | 0.80 | 0.87 | 0.88 | 0.96 | 0.59 | 0.67 | 0.74 | 0.75 | 0.83 | 0.51 | 0.59 | 0.65 | 0.66 | 0.74 | 0.39 | 0.46 | 0.51 | 0.52 | 0.59 |
| | | PI | 0.52 | 0.52 | 0.52 | 0.52 | 0.52 | 0.55 | 0.55 | 0.55 | 0.55 | 0.55 | 0.58 | 0.58 | 0.58 | 0.58 | 0.58 | 0.63 | 0.63 | 0.63 | 0.63 | 0.63 |
| | 50°F(10.0°C) | TC | 10192 | 10194 | 10288 | 10371 | 10756 | 10809 | 10811 | 10814 | 10815 | 10855 | 11256 | 11257 | 11262 | 11263 | 11268 | 12123 | 12119 | 12120 | 12119 | 12130 |
| | | S/T | 0.79 | 0.89 | 0.99 | 1.00 | 1.00 | 0.64 | 0.74 | 0.82 | 0.84 | 0.94 | 0.54 | 0.64 | 0.72 | 0.73 | 0.83 | 0.39 | 0.46 | 0.54 | 0.56 | 0.65 |
| | | PI | 0.60 | 0.60 | 0.60 | 0.60 | 0.60 | 0.60 | 0.60 | 0.60 | 0.60 | 0.60 | 0.60 | 0.60 | 0.60 | 0.60 | 0.60 | 0.60 | 0.60 | 0.60 | 0.60 | 0.60 |
| | 59°F(15.0°C) | TC | 9642 | 9656 | 9846 | 9904 | 10291 | 10255 | 10257 | 10259 | 10259 | 10322 | 10703 | 10701 | 10705 | 10706 | 10709 | 11564 | 11559 | 11560 | 11560 | 11568 |
| | | S/T | 0.80 | 0.91 | 1.00 | 1.00 | 1.00 | 0.65 | 0.75 | 0.84 | 0.86 | 0.96 | 0.54 | 0.65 | 0.73 | 0.75 | 0.85 | 0.39 | 0.47 | 0.55 | 0.56 | 0.66 |
| | | PI | 0.64 | 0.64 | 0.64 | 0.64 | 0.64 | 0.64 | 0.64 | 0.64 | 0.64 | 0.64 | 0.65 | 0.65 | 0.65 | 0.65 | 0.65 | 0.65 | 0.65 | 0.65 | 0.65 | 0.65 |
| | 68°F(20.0°C) | TC | 9101 | 9131 | 9389 | 9446 | 9833 | 9705 | 9707 | 9708 | 9709 | 9825 | 10146 | 10144 | 10148 | 10149 | 10151 | 10995 | 10990 | 10990 | 10990 | 10999 |
| | | S/T | 0.82 | 0.94 | 1.00 | 1.00 | 1.00 | 0.66 | 0.77 | 0.86 | 0.88 | 1.00 | 0.55 | 0.66 | 0.75 | 0.77 | 0.87 | 0.39 | 0.47 | 0.56 | 0.57 | 0.67 |
| | | PI | 0.69 | 0.69 | 0.69 | 0.69 | 0.69 | 0.69 | 0.69 | 0.69 | 0.69 | 0.69 | 0.70 | 0.70 | 0.70 | 0.70 | 0.70 | 0.71 | 0.71 | 0.71 | 0.71 | 0.71 |
| | 77°F(25.0°C) | TC | 8551 | 8593 | 8888 | 8946 | 9331 | 9149 | 9152 | 9154 | 9163 | 9345 | 9587 | 9586 | 9591 | 9592 | 9603 | 10428 | 10424 | 10425 | 10425 | 10437 |
| | | S/T | 0.83 | 0.96 | 1.00 | 1.00 | 1.00 | 0.66 | 0.78 | 0.88 | 0.89 | 1.00 | 0.55 | 0.67 | 0.76 | 0.78 | 0.88 | 0.39 | 0.48 | 0.56 | 0.58 | 0.68 |
| | | PI | 0.74 | 0.74 | 0.74 | 0.74 | 0.74 | 0.74 | 0.74 | 0.74 | 0.74 | 0.74 | 0.75 | 0.75 | 0.75 | 0.75 | 0.75 | 0.75 | 0.75 | 0.75 | 0.75 | 0.75 |
| | 82°F(27.8°C) | TC | 8597 | 8652 | 8984 | 9044 | 9443 | 9214 | 9218 | 9226 | 9234 | 9457 | 9666 | 9666 | 9672 | 9673 | 9689 | 10535 | 10530 | 10532 | 10533 | 10547 |
| | | S/T | 0.84 | 0.97 | 1.00 | 1.00 | 1.00 | 0.67 | 0.79 | 0.88 | 0.90 | 1.00 | 0.56 | 0.67 | 0.77 | 0.78 | 0.89 | 0.39 | 0.48 | 0.57 | 0.58 | 0.68 |
| | | PI | 0.82 | 0.82 | 0.83 | 0.83 | 0.83 | 0.83 | 0.83 | 0.83 | 0.83 | 0.83 | 0.83 | 0.83 | 0.83 | 0.83 | 0.83 | 0.84 | 0.84 | 0.84 | 0.84 | 0.84 |
| | 86°F(30.0°C) | TC | 9075 | 9154 | 9535 | 9600 | 10031 | 9738 | 9742 | 9756 | 9765 | 10046 | 10222 | 10224 | 10229 | 10230 | 10253 | 11156 | 11150 | 11152 | 11154 | 11168 |
| | | S/T | 0.85 | 0.98 | 1.00 | 1.00 | 1.00 | 0.67 | 0.80 | 0.89 | 0.91 | 1.00 | 0.56 | 0.68 | 0.77 | 0.79 | 0.90 | 0.39 | 0.48 | 0.57 | 0.59 | 0.69 |
| | | PI | 0.96 | 0.97 | 0.97 | 0.97 | 0.98 | 0.97 | 0.97 | 0.97 | 0.97 | 0.98 | 0.98 | 0.98 | 0.98 | 0.98 | 0.98 | 0.99 | 0.99 | 0.99 | 0.99 | 0.99 |
| | 95°F(35.0°C) | TC | 10299 | 10299 | 10300 | 10311 | 10575 | 10989 | 10986 | 10985 | 10985 | 10987 | 11486 | 11485 | 11482 | 11482 | 11483 | 12447 | 12443 | 12439 | 12439 | 12439 |
| | | S/T | 0.74 | 0.83 | 0.91 | 0.92 | 1.00 | 0.61 | 0.69 | 0.77 | 0.78 | 0.87 | 0.52 | 0.60 | 0.67 | 0.69 | 0.77 | 0.39 | 0.47 | 0.52 | 0.53 | 0.61 |
| | | PI | 1.24 | 1.24 | 1.24 | 1.24 | 1.25 | 1.28 | 1.28 | 1.28 | 1.28 | 1.28 | 1.30 | 1.30 | 1.30 | 1.30 | 1.30 | 1.36 | 1.36 | 1.36 | 1.36 | 1.36 |
| | 104°F(40.0°C) | TC | 9472 | 9473 | 9490 | 9503 | 9820 | 10105 | 10103 | 10103 | 10103 | 10105 | 10562 | 10561 | 10559 | 10559 | 10560 | 11444 | 11440 | 11437 | 11436 | 11436 |
| | | S/T | 0.75 | 0.85 | 0.93 | 0.95 | 1.00 | 0.61 | 0.71 | 0.78 | 0.80 | 0.89 | 0.52 | 0.61 | 0.69 | 0.70 | 0.79 | 0.39 | 0.45 | 0.52 | 0.54 | 0.62 |
| | | PI | 1.23 | 1.23 | 1.23 | 1.23 | 1.25 | 1.27 | 1.27 | 1.27 | 1.27 | 1.27 | 1.29 | 1.29 | 1.29 | 1.29 | 1.29 | 1.35 | 1.35 | 1.35 | 1.35 | 1.35 |
| | 110°F(43.0°C) | TC | 8919 | 8932 | 9133 | 9192 | 9579 | 9550 | 9549 | 9551 | 9551 | 9606 | 10005 | 10004 | 10005 | 10005 | 10008 | 10882 | 10878 | 10878 | 10878 | 10877 |
| | | S/T | 0.80 | 0.91 | 1.00 | 1.00 | 1.00 | 0.64 | 0.75 | 0.84 | 0.86 | 0.96 | 0.54 | 0.65 | 0.73 | 0.75 | 0.85 | 0.39 | 0.47 | 0.55 | 0.56 | 0.66 |
| | | PI | 1.24 | 1.24 | 1.25 | 1.25 | 1.27 | 1.27 | 1.27 | 1.27 | 1.27 | 1.27 | 1.29 | 1.29 | 1.29 | 1.29 | 1.29 | 1.33 | 1.33 | 1.33 | 1.33 | 1.33 |
| | 115°F(46.0°C) | TC | 7832 | 7862 | 8130 | 8184 | 8542 | 8401 | 8402 | 8403 | 8403 | 8554 | 8812 | 8811 | 8813 | 8814 | 8814 | 9603 | 9599 | 9598 | 9598 | 9602 |
| | | S/T | 0.83 | 0.95 | 1.00 | 1.00 | 1.00 | 0.66 | 0.77 | 0.87 | 0.89 | 1.00 | 0.55 | 0.66 | 0.75 | 0.77 | 0.88 | 0.39 | 0.47 | 0.56 | 0.57 | 0.67 |
| | | PI | 1.10 | 1.10 | 1.11 | 1.11 | 1.13 | 1.12 | 1.12 | 1.12 | 1.12 | 1.13 | 1.14 | 1.14 | 1.14 | 1.14 | 1.14 | 1.17 | 1.17 | 1.17 | 1.17 | 1.17 |
| | 122°F(50.0°C) | TC | 6354 | 6629 | 6920 | 6970 | 7316 | 6853 | 6853 | 6913 | 6980 | 7325 | 7222 | 7224 | 7225 | 7224 | 7333 | 7937 | 7933 | 7938 | 7939 | 7940 |
| | | S/T | 0.93 | 1.00 | 1.00 | 1.00 | 1.00 | 0.72 | 0.86 | 0.99 | 1.00 | 1.00 | 0.59 | 0.73 | 0.84 | 0.86 | 1.00 | 0.39 | 0.50 | 0.61 | 0.62 | 0.75 |
| | | PI | 0.92 | 0.93 | 0.93 | 0.93 | 0.94 | 0.93 | 0.93 | 0.93 | 0.93 | 0.94 | 0.94 | 0.94 | 0.94 | 0.94 | 0.94 | 0.96 | 0.96 | 0.96 | 0.96 | 0.96 |

## Table 8 – 12K Cooling Performance (Continued)

| AIRFLOW (CFM) | OUTDOOR DB (°F) | ID WB °F(C) | 60.8°F(16.0°C) | | | | | 64.4°F(18.0°C) | | | | | 67°F(19.4°C) | | | | | 71.6°F(22.0°C) | | | | |
|---|---|---|---|---|---|---|---|---|---|---|---|---|---|---|---|---|---|---|---|---|---|---|
| | | ID DB °F °C | 73.4°F 23.0°C | 77.0°F 25.0°C | 80.0°F 26.7°C | 80.6°F 27.0°C | 84.2°F 29.0°C | 73.4°F 23.0°C | 77.0°F 25.0°C | 80.0°F 26.7°C | 80.6°F 27.0°C | 84.2°F 29.0°C | 73.4°F 23.0°C | 77.0°F 25.0°C | 80.0°F 26.7°C | 80.6°F 27.0°C | 84.2°F 29.0°C | 73.4°F 23.0°C | 77.0°F 25.0°C | 80.0°F 26.7°C | 80.6°F 27.0°C | 84.2°F 29.0°C |
| 241 | 5°F(-15.0°C) | TC | 11101 | 11102 | 11137 | 11153 | 11479 | 11642 | 11641 | 11643 | 11643 | 11657 | 12029 | 12029 | 12029 | 12030 | 12032 | 12769 | 12765 | 12765 | 12765 | 12766 |
| | | S/T | 0.76 | 0.86 | 0.94 | 0.96 | 1.00 | 0.62 | 0.72 | 0.80 | 0.81 | 0.90 | 0.53 | 0.62 | 0.70 | 0.72 | 0.81 | 0.39 | 0.46 | 0.54 | 0.55 | 0.64 |
| | | PI | 0.63 | 0.63 | 0.63 | 0.63 | 0.63 | 0.63 | 0.63 | 0.63 | 0.63 | 0.64 | 0.64 | 0.64 | 0.64 | 0.64 | 0.64 | 0.65 | 0.65 | 0.65 | 0.65 | 0.65 |
| | 14°F(-10.0°C) | TC | 11208 | 11206 | 11204 | 11203 | 11521 | 11781 | 11777 | 11774 | 11773 | 11769 | 12190 | 12186 | 12182 | 12181 | 12175 | 12968 | 12964 | 12959 | 12959 | 12950 |
| | | S/T | 0.75 | 0.85 | 0.93 | 0.95 | 1.00 | 0.62 | 0.71 | 0.79 | 0.80 | 0.89 | 0.53 | 0.62 | 0.69 | 0.71 | 0.79 | 0.39 | 0.46 | 0.53 | 0.54 | 0.63 |
| | | PI | 0.61 | 0.61 | 0.61 | 0.61 | 0.60 | 0.60 | 0.60 | 0.60 | 0.60 | 0.60 | 0.60 | 0.60 | 0.60 | 0.60 | 0.60 | 0.60 | 0.60 | 0.60 | 0.60 | 0.60 |
| | 17°F(-8.3°C) | TC | 11243 | 11239 | 11268 | 11284 | 11622 | 11817 | 11813 | 11815 | 11816 | 11828 | 12231 | 12231 | 12232 | 12233 | 12237 | 13033 | 13029 | 13030 | 13030 | 13033 |
| | | S/T | 0.76 | 0.86 | 0.94 | 0.96 | 1.00 | 0.62 | 0.72 | 0.80 | 0.81 | 0.90 | 0.53 | 0.62 | 0.70 | 0.71 | 0.80 | 0.39 | 0.46 | 0.53 | 0.55 | 0.63 |
| | | PI | 0.59 | 0.59 | 0.59 | 0.59 | 0.59 | 0.59 | 0.59 | 0.59 | 0.59 | 0.59 | 0.59 | 0.59 | 0.59 | 0.59 | 0.59 | 0.59 | 0.59 | 0.59 | 0.59 | 0.59 |
| | 23°F(-5.0°C) | TC | 10958 | 10959 | 11003 | 11023 | 11385 | 11533 | 11533 | 11535 | 11535 | 11553 | 11946 | 11946 | 11947 | 11947 | 11950 | 12737 | 12734 | 12734 | 12733 | 12735 |
| | | S/T | 0.77 | 0.87 | 0.95 | 0.97 | 1.00 | 0.62 | 0.72 | 0.80 | 0.82 | 0.91 | 0.53 | 0.63 | 0.71 | 0.72 | 0.81 | 0.39 | 0.46 | 0.54 | 0.55 | 0.64 |
| | | PI | 0.64 | 0.64 | 0.64 | 0.64 | 0.65 | 0.65 | 0.65 | 0.65 | 0.65 | 0.65 | 0.65 | 0.65 | 0.65 | 0.65 | 0.65 | 0.66 | 0.66 | 0.66 | 0.66 | 0.66 |
| | 35°F(1.7°C) | TC | 10491 | 10490 | 10490 | 10490 | 10625 | 11012 | 11010 | 11009 | 11009 | 11010 | 11378 | 11377 | 11375 | 11375 | 11375 | 12062 | 12059 | 12057 | 12057 | 12056 |
| | | S/T | 0.73 | 0.81 | 0.89 | 0.90 | 1.00 | 0.60 | 0.68 | 0.76 | 0.77 | 0.85 | 0.52 | 0.60 | 0.67 | 0.68 | 0.76 | 0.39 | 0.47 | 0.52 | 0.53 | 0.60 |
| | | PI | 0.70 | 0.70 | 0.70 | 0.70 | 0.71 | 0.74 | 0.74 | 0.74 | 0.74 | 0.74 | 0.77 | 0.77 | 0.77 | 0.77 | 0.77 | 0.84 | 0.84 | 0.84 | 0.84 | 0.84 |
| | 41°F(5.0°C) | TC | 10657 | 10682 | 10682 | 10686 | 10862 | 11211 | 11209 | 11208 | 11208 | 11208 | 11581 | 11580 | 11578 | 11578 | 11578 | 12273 | 12270 | 12268 | 12267 | 12266 |
| | | S/T | 0.74 | 0.82 | 0.90 | 0.91 | 1.00 | 0.60 | 0.69 | 0.76 | 0.78 | 0.86 | 0.52 | 0.60 | 0.67 | 0.69 | 0.77 | 0.39 | 0.45 | 0.52 | 0.53 | 0.61 |
| | | PI | 0.61 | 0.61 | 0.61 | 0.61 | 0.62 | 0.65 | 0.65 | 0.65 | 0.65 | 0.65 | 0.68 | 0.68 | 0.68 | 0.68 | 0.68 | 0.74 | 0.74 | 0.74 | 0.74 | 0.74 |
| | 47°F(8.3°C) | TC | 10875 | 10874 | 10874 | 10885 | 11099 | 11408 | 11406 | 11405 | 11406 | 11406 | 11784 | 11783 | 11781 | 11781 | 11781 | 12484 | 12482 | 12479 | 12479 | 12478 |
| | | S/T | 0.74 | 0.83 | 0.91 | 0.92 | 1.00 | 0.61 | 0.70 | 0.77 | 0.78 | 0.87 | 0.52 | 0.61 | 0.68 | 0.69 | 0.78 | 0.39 | 0.45 | 0.52 | 0.53 | 0.62 |
| | | PI | 0.52 | 0.52 | 0.52 | 0.52 | 0.53 | 0.55 | 0.55 | 0.55 | 0.55 | 0.55 | 0.58 | 0.58 | 0.58 | 0.58 | 0.58 | 0.63 | 0.63 | 0.63 | 0.63 | 0.63 |
| | 50°F(10.0°C) | TC | 10502 | 10547 | 10844 | 10906 | 11318 | 11125 | 11132 | 11135 | 11147 | 11332 | 11577 | 11583 | 11590 | 11591 | 11608 | 12439 | 12435 | 12449 | 12452 | 12469 |
| | | S/T | 0.83 | 0.95 | 1.00 | 1.00 | 1.00 | 0.66 | 0.78 | 0.87 | 0.88 | 1.00 | 0.55 | 0.66 | 0.76 | 0.77 | 0.88 | 0.39 | 0.48 | 0.56 | 0.58 | 0.68 |
| | | PI | 0.60 | 0.60 | 0.60 | 0.60 | 0.60 | 0.60 | 0.60 | 0.60 | 0.60 | 0.60 | 0.60 | 0.60 | 0.60 | 0.60 | 0.60 | 0.60 | 0.60 | 0.60 | 0.60 | 0.60 |
| | 59°F(15.0°C) | TC | 9935 | 10006 | 10360 | 10421 | 10836 | 10557 | 10562 | 10578 | 10587 | 10850 | 11006 | 11012 | 11017 | 11018 | 11044 | 11870 | 11865 | 11877 | 11879 | 11892 |
| | | S/T | 0.85 | 0.97 | 1.00 | 1.00 | 1.00 | 0.67 | 0.79 | 0.89 | 0.91 | 1.00 | 0.56 | 0.68 | 0.77 | 0.79 | 0.90 | 0.39 | 0.48 | 0.57 | 0.59 | 0.69 |
| | | PI | 0.64 | 0.64 | 0.64 | 0.64 | 0.65 | 0.64 | 0.64 | 0.64 | 0.64 | 0.65 | 0.65 | 0.65 | 0.65 | 0.65 | 0.65 | 0.65 | 0.65 | 0.65 | 0.65 | 0.65 |
| | 68°F(20.0°C) | TC | 9378 | 9536 | 9882 | 9944 | 10357 | 9992 | 9996 | 10023 | 10035 | 10370 | 10435 | 10440 | 10444 | 10444 | 10485 | 11288 | 11283 | 11294 | 11297 | 11306 |
| | | S/T | 0.87 | 1.00 | 1.00 | 1.00 | 1.00 | 0.69 | 0.81 | 0.91 | 0.93 | 1.00 | 0.57 | 0.69 | 0.79 | 0.81 | 0.93 | 0.39 | 0.49 | 0.58 | 0.60 | 0.71 |
| | | PI | 0.69 | 0.69 | 0.69 | 0.69 | 0.70 | 0.69 | 0.69 | 0.69 | 0.69 | 0.70 | 0.70 | 0.70 | 0.70 | 0.70 | 0.70 | 0.71 | 0.71 | 0.71 | 0.71 | 0.70 |
| | 77°F(25.0°C) | TC | 8811 | 9016 | 9362 | 9423 | 9835 | 9420 | 9424 | 9461 | 9476 | 9848 | 9857 | 9865 | 9870 | 9871 | 9922 | 10703 | 10697 | 10714 | 10717 | 10729 |
| | | S/T | 0.88 | 1.00 | 1.00 | 1.00 | 1.00 | 0.69 | 0.82 | 0.93 | 0.95 | 1.00 | 0.57 | 0.70 | 0.80 | 0.82 | 0.94 | 0.39 | 0.49 | 0.59 | 0.60 | 0.72 |
| | | PI | 0.74 | 0.74 | 0.74 | 0.74 | 0.75 | 0.74 | 0.74 | 0.74 | 0.74 | 0.75 | 0.75 | 0.75 | 0.75 | 0.75 | 0.75 | 0.75 | 0.75 | 0.75 | 0.75 | 0.75 |
| | 82°F(27.8°C) | TC | 8865 | 9106 | 9465 | 9528 | 9956 | 9487 | 9492 | 9538 | 9556 | 9969 | 9938 | 9948 | 9954 | 9954 | 10017 | 10810 | 10812 | 10826 | 10829 | 10843 |
| | | S/T | 0.88 | 1.00 | 1.00 | 1.00 | 1.00 | 0.70 | 0.83 | 0.94 | 0.96 | 1.00 | 0.58 | 0.70 | 0.81 | 0.83 | 0.96 | 0.39 | 0.49 | 0.59 | 0.61 | 0.72 |
| | | PI | 0.82 | 0.83 | 0.83 | 0.83 | 0.83 | 0.83 | 0.83 | 0.83 | 0.83 | 0.83 | 0.83 | 0.83 | 0.83 | 0.83 | 0.83 | 0.84 | 0.84 | 0.84 | 0.84 | 0.84 |
| | 86°F(30.0°C) | TC | 9364 | 9660 | 10047 | 10116 | 10577 | 10027 | 10032 | 10092 | 10119 | 10591 | 10511 | 10522 | 10527 | 10528 | 10609 | 11448 | 11448 | 11465 | 11468 | 11481 |
| | | S/T | 0.90 | 1.00 | 1.00 | 1.00 | 1.00 | 0.71 | 0.84 | 0.96 | 0.98 | 1.00 | 0.58 | 0.71 | 0.82 | 0.84 | 0.97 | 0.39 | 0.50 | 0.60 | 0.61 | 0.73 |
| | | PI | 0.96 | 0.97 | 0.97 | 0.97 | 0.98 | 0.97 | 0.97 | 0.97 | 0.97 | 0.98 | 0.98 | 0.98 | 0.98 | 0.98 | 0.98 | 0.99 | 0.99 | 0.99 | 0.99 | 0.99 |
| | 95°F(35.0°C) | TC | 10624 | 10626 | 10684 | 10712 | 11153 | 11318 | 11317 | 11320 | 11320 | 11340 | 11817 | 11817 | 11817 | 11817 | 11823 | 12781 | 12776 | 12772 | 12778 | 12775 |
| | | S/T | 0.77 | 0.87 | 0.96 | 0.98 | 1.00 | 0.63 | 0.72 | 0.80 | 0.82 | 0.91 | 0.53 | 0.62 | 0.70 | 0.72 | 0.81 | 0.39 | 0.46 | 0.53 | 0.55 | 0.63 |
| | | PI | 1.24 | 1.24 | 1.24 | 1.24 | 1.27 | 1.28 | 1.28 | 1.28 | 1.28 | 1.28 | 1.30 | 1.30 | 1.30 | 1.30 | 1.30 | 1.36 | 1.36 | 1.36 | 1.36 | 1.36 |
| | 104°F(40.0°C) | TC | 9769 | 9770 | 9871 | 9962 | 10355 | 10406 | 10406 | 10409 | 10409 | 10446 | 10866 | 10866 | 10866 | 10867 | 10872 | 11749 | 11745 | 11741 | 11745 | 11744 |
| | | S/T | 0.79 | 0.89 | 0.99 | 1.00 | 1.00 | 0.63 | 0.74 | 0.82 | 0.84 | 0.94 | 0.54 | 0.64 | 0.72 | 0.73 | 0.83 | 0.39 | 0.46 | 0.54 | 0.55 | 0.65 |
| | | PI | 1.23 | 1.23 | 1.23 | 1.24 | 1.26 | 1.27 | 1.27 | 1.27 | 1.27 | 1.27 | 1.29 | 1.29 | 1.29 | 1.29 | 1.29 | 1.35 | 1.35 | 1.35 | 1.35 | 1.35 |
| | 110°F(43.0°C) | TC | 9196 | 9266 | 9623 | 9685 | 10099 | 9831 | 9835 | 9843 | 9852 | 10113 | 10292 | 10292 | 10296 | 10297 | 10315 | 11172 | 11168 | 11168 | 11169 | 11178 |
| | | S/T | 0.85 | 0.97 | 1.00 | 1.00 | 1.00 | 0.67 | 0.79 | 0.89 | 0.91 | 1.00 | 0.56 | 0.68 | 0.77 | 0.79 | 0.90 | 0.39 | 0.48 | 0.57 | 0.59 | 0.69 |
| | | PI | 1.24 | 1.24 | 1.26 | 1.26 | 1.28 | 1.27 | 1.27 | 1.27 | 1.27 | 1.28 | 1.29 | 1.29 | 1.29 | 1.29 | 1.29 | 1.33 | 1.33 | 1.33 | 1.33 | 1.33 |
| | 115°F(46.0°C) | TC | 8074 | 8247 | 8569 | 8625 | 9006 | 8650 | 8652 | 8676 | 8688 | 9018 | 9065 | 9067 | 9070 | 9070 | 9104 | 9861 | 9856 | 9860 | 9862 | 9869 |
| | | S/T | 0.88 | 1.00 | 1.00 | 1.00 | 1.00 | 0.69 | 0.82 | 0.92 | 0.94 | 1.00 | 0.57 | 0.69 | 0.80 | 0.82 | 0.94 | 0.39 | 0.49 | 0.58 | 0.60 | 0.71 |
| | | PI | 1.10 | 1.11 | 1.12 | 1.12 | 1.14 | 1.12 | 1.12 | 1.12 | 1.12 | 1.14 | 1.14 | 1.14 | 1.14 | 1.14 | 1.14 | 1.17 | 1.17 | 1.17 | 1.17 | 1.17 |
| | 122°F(50.0°C) | TC | 6599 | 6971 | 7279 | 7334 | 7700 | 7045 | 7063 | 7288 | 7343 | 7709 | 7421 | 7423 | 7435 | 7443 | 7716 | 8139 | 8142 | 8149 | 8149 | 8148 |
| | | S/T | 1.00 | 1.00 | 1.00 | 1.00 | 1.00 | 0.76 | 0.92 | 1.00 | 1.00 | 1.00 | 0.62 | 0.77 | 0.89 | 0.92 | 1.00 | 0.40 | 0.52 | 0.64 | 0.66 | 0.79 |
| | | PI | 0.92 | 0.93 | 0.94 | 0.94 | 0.95 | 0.93 | 0.93 | 0.94 | 0.94 | 0.95 | 0.94 | 0.94 | 0.94 | 0.94 | 0.95 | 0.96 | 0.96 | 0.96 | 0.96 | 0.96 |

## Table 8 – 12K Cooling Performance (Continued)

| AIRFLOW (CFM) | OUTDOOR DB (°F) | ID WB °F(C) | 60.8°F(16.0°C) | | | | | 64.4°F(18.0°C) | | | | | 67°F(19.4°C) | | | | | 71.6°F(22.0°C) | | | | |
|---|---|---|---|---|---|---|---|---|---|---|---|---|---|---|---|---|---|---|---|---|---|---|
| | | ID DB °F °C | 73.4°F 23.0°C | 77.0°F 25.0°C | 80.0°F 26.7°C | 80.6°F 27.0°C | 84.2°F 29.0°C | 73.4°F 23.0°C | 77.0°F 25.0°C | 80.0°F 26.7°C | 80.6°F 27.0°C | 84.2°F 29.0°C | 73.4°F 23.0°C | 77.0°F 25.0°C | 80.0°F 26.7°C | 80.6°F 27.0°C | 84.2°F 29.0°C | 73.4°F 23.0°C | 77.0°F 25.0°C | 80.0°F 26.7°C | 80.6°F 27.0°C | 84.2°F 29.0°C |
| 294 | 5°F(-15.0°C) | TC | 11441 | 11452 | 11606 | 11659 | 12016 | 11985 | 11988 | 11989 | 11989 | 12048 | 12377 | 12376 | 12380 | 12380 | 12382 | 13117 | 13113 | 13113 | 13114 | 13122 |
| | | S/T | 0.79 | 0.90 | 1.00 | 1.00 | 1.00 | 0.64 | 0.75 | 0.84 | 0.85 | 0.96 | 0.54 | 0.65 | 0.73 | 0.75 | 0.85 | 0.39 | 0.47 | 0.55 | 0.57 | 0.66 |
| | | PI | 0.64 | 0.64 | 0.64 | 0.64 | 0.64 | 0.64 | 0.64 | 0.64 | 0.64 | 0.64 | 0.64 | 0.64 | 0.64 | 0.64 | 0.64 | 0.66 | 0.66 | 0.66 | 0.66 | 0.66 |
| | 14°F(-10.0°C) | TC | 11553 | 11549 | 11596 | 11698 | 12061 | 12133 | 12126 | 12120 | 12119 | 12113 | 12552 | 12546 | 12536 | 12535 | 12524 | 13341 | 13337 | 13328 | 13325 | 13304 |
| | | S/T | 0.78 | 0.89 | 0.99 | 1.00 | 1.00 | 0.64 | 0.74 | 0.82 | 0.84 | 0.94 | 0.54 | 0.64 | 0.72 | 0.74 | 0.83 | 0.39 | 0.47 | 0.55 | 0.56 | 0.65 |
| | | PI | 0.61 | 0.61 | 0.61 | 0.61 | 0.61 | 0.61 | 0.61 | 0.61 | 0.61 | 0.61 | 0.61 | 0.61 | 0.61 | 0.61 | 0.61 | 0.61 | 0.61 | 0.61 | 0.61 | 0.61 |
| | 17°F(-8.3°C) | TC | 11604 | 11607 | 11750 | 11817 | 12198 | 12187 | 12188 | 12191 | 12191 | 12249 | 12576 | 12581 | 12589 | 12589 | 12592 | 13412 | 13408 | 13409 | 13412 | 13424 |
| | | S/T | 0.79 | 0.89 | 1.00 | 1.00 | 1.00 | 0.64 | 0.74 | 0.83 | 0.85 | 0.95 | 0.55 | 0.65 | 0.73 | 0.75 | 0.85 | 0.39 | 0.47 | 0.55 | 0.57 | 0.66 |
| | | PI | 0.60 | 0.60 | 0.60 | 0.60 | 0.59 | 0.59 | 0.59 | 0.59 | 0.59 | 0.59 | 0.59 | 0.59 | 0.59 | 0.59 | 0.59 | 0.60 | 0.60 | 0.60 | 0.60 | 0.60 |
| | 23°F(-5.0°C) | TC | 11293 | 11309 | 11493 | 11549 | 11927 | 11873 | 11876 | 11877 | 11878 | 11948 | 12291 | 12291 | 12295 | 12295 | 12297 | 13084 | 13080 | 13080 | 13082 | 13091 |
| | | S/T | 0.80 | 0.91 | 1.00 | 1.00 | 1.00 | 0.65 | 0.75 | 0.84 | 0.86 | 0.97 | 0.54 | 0.65 | 0.74 | 0.75 | 0.85 | 0.39 | 0.47 | 0.56 | 0.57 | 0.66 |
| | | PI | 0.65 | 0.65 | 0.65 | 0.65 | 0.65 | 0.65 | 0.65 | 0.65 | 0.65 | 0.65 | 0.66 | 0.66 | 0.66 | 0.66 | 0.66 | 0.67 | 0.67 | 0.67 | 0.67 | 0.67 |
| | 35°F(1.7°C) | TC | 10825 | 10825 | 10846 | 10858 | 11137 | 11344 | 11343 | 11343 | 11344 | 11344 | 11709 | 11708 | 11707 | 11707 | 11708 | 12387 | 12384 | 12381 | 12383 | 12381 |
| | | S/T | 0.75 | 0.85 | 0.93 | 0.94 | 1.00 | 0.62 | 0.71 | 0.79 | 0.80 | 0.89 | 0.53 | 0.62 | 0.69 | 0.71 | 0.80 | 0.39 | 0.46 | 0.53 | 0.54 | 0.63 |
| | | PI | 0.71 | 0.71 | 0.71 | 0.71 | 0.73 | 0.75 | 0.75 | 0.75 | 0.75 | 0.75 | 0.78 | 0.78 | 0.78 | 0.78 | 0.78 | 0.85 | 0.85 | 0.85 | 0.85 | 0.85 |
| | 41°F(5.0°C) | TC | 11022 | 11022 | 11053 | 11068 | 11382 | 11548 | 11547 | 11547 | 11548 | 11558 | 11918 | 11917 | 11916 | 11916 | 11917 | 12604 | 12601 | 12598 | 12600 | 12598 |
| | | S/T | 0.76 | 0.86 | 0.94 | 0.96 | 1.00 | 0.62 | 0.72 | 0.80 | 0.81 | 0.90 | 0.53 | 0.62 | 0.70 | 0.71 | 0.81 | 0.39 | 0.46 | 0.53 | 0.55 | 0.64 |
| | | PI | 0.61 | 0.61 | 0.62 | 0.62 | 0.64 | 0.65 | 0.65 | 0.65 | 0.65 | 0.65 | 0.68 | 0.68 | 0.68 | 0.68 | 0.68 | 0.74 | 0.74 | 0.74 | 0.74 | 0.74 |
| | 47°F(8.3°C) | TC | 11219 | 11219 | 11262 | 11282 | 11629 | 11752 | 11751 | 11751 | 11751 | 11769 | 12127 | 12125 | 12125 | 12125 | 12125 | 12823 | 12819 | 12819 | 12818 | 12816 |
| | | S/T | 0.77 | 0.87 | 0.95 | 0.97 | 1.00 | 0.63 | 0.72 | 0.81 | 0.82 | 0.91 | 0.53 | 0.63 | 0.71 | 0.72 | 0.82 | 0.39 | 0.46 | 0.54 | 0.55 | 0.64 |
| | | PI | 0.52 | 0.52 | 0.53 | 0.53 | 0.55 | 0.56 | 0.56 | 0.56 | 0.56 | 0.56 | 0.58 | 0.58 | 0.58 | 0.58 | 0.58 | 0.64 | 0.64 | 0.64 | 0.64 | 0.64 |
| | 50°F(10.0°C) | TC | 10819 | 10996 | 11363 | 11428 | 11866 | 11455 | 11461 | 11499 | 11513 | 11880 | 11906 | 11921 | 11928 | 11929 | 11982 | 12763 | 12770 | 12801 | 12804 | 12821 |
| | | S/T | 0.87 | 1.00 | 1.00 | 1.00 | 1.00 | 0.69 | 0.81 | 0.92 | 0.94 | 1.00 | 0.57 | 0.69 | 0.80 | 0.81 | 0.93 | 0.39 | 0.49 | 0.58 | 0.60 | 0.71 |
| | | PI | 0.60 | 0.60 | 0.60 | 0.60 | 0.60 | 0.60 | 0.60 | 0.60 | 0.60 | 0.60 | 0.60 | 0.60 | 0.60 | 0.60 | 0.60 | 0.60 | 0.60 | 0.60 | 0.60 | 0.60 |
| | 59°F(15.0°C) | TC | 10245 | 10491 | 10860 | 10926 | 11365 | 10870 | 10875 | 10929 | 10950 | 11379 | 11321 | 11333 | 11338 | 11338 | 11413 | 12186 | 12189 | 12213 | 12216 | 12228 |
| | | S/T | 0.88 | 1.00 | 1.00 | 1.00 | 1.00 | 0.70 | 0.83 | 0.94 | 0.97 | 1.00 | 0.58 | 0.71 | 0.81 | 0.83 | 0.96 | 0.39 | 0.50 | 0.59 | 0.61 | 0.73 |
| | | PI | 0.65 | 0.65 | 0.65 | 0.65 | 0.65 | 0.65 | 0.65 | 0.65 | 0.65 | 0.65 | 0.65 | 0.65 | 0.65 | 0.65 | 0.65 | 0.66 | 0.66 | 0.66 | 0.66 | 0.66 |
| | 68°F(20.0°C) | TC | 9683 | 9995 | 10363 | 10429 | 10867 | 10288 | 10291 | 10372 | 10440 | 10879 | 10736 | 10745 | 10748 | 10748 | 10871 | 11593 | 11596 | 11615 | 11617 | 11625 |
| | | S/T | 0.91 | 1.00 | 1.00 | 1.00 | 1.00 | 0.72 | 0.85 | 0.97 | 1.00 | 1.00 | 0.59 | 0.72 | 0.84 | 0.86 | 0.99 | 0.40 | 0.50 | 0.61 | 0.62 | 0.75 |
| | | PI | 0.69 | 0.70 | 0.70 | 0.70 | 0.70 | 0.70 | 0.70 | 0.70 | 0.70 | 0.70 | 0.70 | 0.70 | 0.70 | 0.70 | 0.70 | 0.71 | 0.71 | 0.71 | 0.71 | 0.71 |
| | 77°F(25.0°C) | TC | 9107 | 9455 | 9822 | 9887 | 10324 | 9699 | 9703 | 9815 | 9899 | 10336 | 10141 | 10153 | 10158 | 10170 | 10346 | 10984 | 10994 | 11018 | 11021 | 11033 |
| | | S/T | 0.92 | 1.00 | 1.00 | 1.00 | 1.00 | 0.72 | 0.87 | 0.99 | 1.00 | 1.00 | 0.59 | 0.73 | 0.85 | 0.86 | 1.00 | 0.40 | 0.51 | 0.61 | 0.63 | 0.76 |
| | | PI | 0.74 | 0.75 | 0.75 | 0.75 | 0.76 | 0.75 | 0.75 | 0.75 | 0.75 | 0.76 | 0.75 | 0.75 | 0.75 | 0.75 | 0.76 | 0.76 | 0.76 | 0.76 | 0.76 | 0.76 |
| | 82°F(27.8°C) | TC | 9163 | 9551 | 9932 | 10000 | 10454 | 9768 | 9784 | 9944 | 10012 | 10466 | 10225 | 10238 | 10243 | 10259 | 10476 | 11090 | 11105 | 11132 | 11136 | 11149 |
| | | S/T | 0.94 | 1.00 | 1.00 | 1.00 | 1.00 | 0.73 | 0.87 | 1.00 | 1.00 | 1.00 | 0.60 | 0.74 | 0.86 | 0.87 | 1.00 | 0.40 | 0.51 | 0.62 | 0.63 | 0.76 |
| | | PI | 0.83 | 0.84 | 0.84 | 0.84 | 0.84 | 0.84 | 0.84 | 0.84 | 0.84 | 0.84 | 0.84 | 0.84 | 0.84 | 0.84 | 0.84 | 0.85 | 0.85 | 0.85 | 0.85 | 0.85 |
| | 86°F(30.0°C) | TC | 9673 | 10121 | 10532 | 10604 | 11098 | 10312 | 10333 | 10544 | 10617 | 11107 | 10804 | 10816 | 10833 | 10843 | 11117 | 11732 | 11749 | 11777 | 11780 | 11792 |
| | | S/T | 0.95 | 1.00 | 1.00 | 1.00 | 1.00 | 0.74 | 0.88 | 1.00 | 1.00 | 1.00 | 0.60 | 0.75 | 0.86 | 0.88 | 1.00 | 0.40 | 0.51 | 0.62 | 0.64 | 0.77 |
| | | PI | 0.97 | 0.98 | 0.98 | 0.99 | 0.99 | 0.98 | 0.98 | 0.98 | 0.99 | 0.99 | 0.99 | 0.99 | 0.99 | 0.99 | 0.99 | 1.00 | 1.00 | 1.00 | 1.00 | 1.00 |
| | 95°F(35.0°C) | TC | 10950 | 10970 | 11205 | 11271 | 11713 | 11651 | 11653 | 11657 | 11658 | 11737 | 12154 | 12155 | 12161 | 12162 | 12167 | 13120 | 13115 | 13117 | 13116 | 13126 |
| | | S/T | 0.80 | 0.91 | 1.00 | 1.00 | 1.00 | 0.65 | 0.75 | 0.84 | 0.86 | 0.96 | 0.54 | 0.65 | 0.73 | 0.75 | 0.85 | 0.39 | 0.47 | 0.55 | 0.56 | 0.66 |
| | | PI | 1.25 | 1.25 | 1.26 | 1.27 | 1.29 | 1.29 | 1.29 | 1.29 | 1.29 | 1.29 | 1.32 | 1.32 | 1.32 | 1.32 | 1.32 | 1.37 | 1.37 | 1.37 | 1.37 | 1.37 |
| | 104°F(40.0°C) | TC | 10068 | 10104 | 10395 | 10456 | 10871 | 10712 | 10716 | 10719 | 10719 | 10860 | 11175 | 11177 | 11183 | 11184 | 11187 | 12063 | 12059 | 12061 | 12059 | 12071 |
| | | S/T | 0.82 | 0.94 | 1.00 | 1.00 | 1.00 | 0.66 | 0.77 | 0.86 | 0.88 | 1.00 | 0.55 | 0.66 | 0.75 | 0.77 | 0.87 | 0.39 | 0.47 | 0.56 | 0.58 | 0.67 |
| | | PI | 1.24 | 1.24 | 1.26 | 1.26 | 1.29 | 1.28 | 1.28 | 1.28 | 1.28 | 1.29 | 1.31 | 1.31 | 1.31 | 1.31 | 1.31 | 1.36 | 1.36 | 1.36 | 1.36 | 1.36 |
| | 110°F(43.0°C) | TC | 9477 | 9733 | 10102 | 10168 | 10605 | 10124 | 10128 | 10172 | 10191 | 10616 | 10586 | 10593 | 10596 | 10596 | 10658 | 11475 | 11470 | 11482 | 11484 | 11492 |
| | | S/T | 0.89 | 1.00 | 1.00 | 1.00 | 1.00 | 0.70 | 0.83 | 0.94 | 0.96 | 1.00 | 0.58 | 0.70 | 0.81 | 0.83 | 0.96 | 0.39 | 0.49 | 0.59 | 0.61 | 0.73 |
| | | PI | 1.25 | 1.26 | 1.28 | 1.28 | 1.30 | 1.28 | 1.28 | 1.28 | 1.28 | 1.30 | 1.30 | 1.30 | 1.30 | 1.30 | 1.30 | 1.34 | 1.34 | 1.34 | 1.34 | 1.34 |
| | 115°F(46.0°C) | TC | 8331 | 8645 | 8985 | 9045 | 9448 | 8899 | 8901 | 8978 | 9056 | 9459 | 9323 | 9332 | 9334 | 9334 | 9468 | 10118 | 10113 | 10129 | 10131 | 10136 |
| | | S/T | 0.92 | 1.00 | 1.00 | 1.00 | 1.00 | 0.72 | 0.86 | 0.98 | 1.00 | 1.00 | 0.59 | 0.73 | 0.84 | 0.86 | 1.00 | 0.40 | 0.50 | 0.61 | 0.63 | 0.75 |
| | | PI | 1.11 | 1.12 | 1.13 | 1.13 | 1.15 | 1.13 | 1.13 | 1.13 | 1.13 | 1.15 | 1.15 | 1.15 | 1.15 | 1.15 | 1.15 | 1.18 | 1.18 | 1.18 | 1.18 | 1.18 |
| | 122°F(50.0°C) | TC | 6908 | 7287 | 7611 | 7669 | 8054 | 7228 | 7285 | 7620 | 7678 | 8062 | 7612 | 7612 | 7652 | 7674 | 8069 | 8331 | 8347 | 8352 | 8352 | 8347 |
| | | S/T | 1.00 | 1.00 | 1.00 | 1.00 | 1.00 | 0.80 | 0.98 | 1.00 | 1.00 | 1.00 | 0.64 | 0.81 | 0.95 | 0.98 | 1.00 | 0.41 | 0.54 | 0.67 | 0.69 | 0.84 |
| | | PI | 0.93 | 0.94 | 0.95 | 0.95 | 0.96 | 0.94 | 0.94 | 0.95 | 0.95 | 0.96 | 0.95 | 0.95 | 0.95 | 0.95 | 0.96 | 0.97 | 0.97 | 0.97 | 0.97 | 0.96 |

## Table 8 – 12K Cooling Performance (Continued)

| AIRFLOW (CFM) | OUTDOOR DB (°F) | ID WB °F(C) | 60.8°F(16.0°C) | | | | | 64.4°F(18.0°C) | | | | | 67°F(19.4°C) | | | | | 71.6°F(22.0°C) | | | | |
|---|---|---|---|---|---|---|---|---|---|---|---|---|---|---|---|---|---|---|---|---|---|---|
| | | ID DB °F °C | 73.4°F 23.0°C | 77.0°F 25.0°C | 80.0°F 26.7°C | 80.6°F 27.0°C | 84.2°F 29.0°C | 73.4°F 23.0°C | 77.0°F 25.0°C | 80.0°F 26.7°C | 80.6°F 27.0°C | 84.2°F 29.0°C | 73.4°F 23.0°C | 77.0°F 25.0°C | 80.0°F 26.7°C | 80.6°F 27.0°C | 84.2°F 29.0°C | 73.4°F 23.0°C | 77.0°F 25.0°C | 80.0°F 26.7°C | 80.6°F 27.0°C | 84.2°F 29.0°C |
| 312 | 5°F(-15.0°C) | TC | 11787 | 11828 | 12098 | 12154 | 12528 | 12340 | 12343 | 12344 | 12357 | 12541 | 12734 | 12738 | 12740 | 12741 | 12758 | 13481 | 13477 | 13484 | 13486 | 13492 |
| | | S/T | 0.82 | 0.94 | 1.00 | 1.00 | 1.00 | 0.66 | 0.78 | 0.87 | 0.88 | 1.00 | 0.56 | 0.67 | 0.76 | 0.78 | 0.88 | 0.39 | 0.48 | 0.57 | 0.59 | 0.69 |
| | | PI | 0.65 | 0.65 | 0.65 | 0.65 | 0.65 | 0.65 | 0.65 | 0.65 | 0.65 | 0.65 | 0.66 | 0.66 | 0.66 | 0.66 | 0.66 | 0.67 | 0.67 | 0.67 | 0.67 | 0.67 |
| | 14°F(-10.0°C) | TC | 11911 | 11905 | 12148 | 12205 | 12584 | 12503 | 12492 | 12483 | 12482 | 12599 | 12931 | 12915 | 12902 | 12900 | 12887 | 13750 | 13745 | 13719 | 13714 | 13685 |
| | | S/T | 0.81 | 0.93 | 1.00 | 1.00 | 1.00 | 0.65 | 0.76 | 0.86 | 0.87 | 1.00 | 0.55 | 0.66 | 0.75 | 0.76 | 0.87 | 0.39 | 0.48 | 0.56 | 0.57 | 0.67 |
| | | PI | 0.62 | 0.62 | 0.62 | 0.62 | 0.62 | 0.62 | 0.62 | 0.62 | 0.62 | 0.62 | 0.62 | 0.62 | 0.62 | 0.62 | 0.62 | 0.62 | 0.62 | 0.62 | 0.62 | 0.62 |
| | 17°F(-8.3°C) | TC | 11925 | 11963 | 12240 | 12300 | 12699 | 12518 | 12523 | 12526 | 12536 | 12713 | 12945 | 12950 | 12955 | 12956 | 12972 | 13768 | 13764 | 13762 | 13764 | 13776 |
| | | S/T | 0.82 | 0.93 | 1.00 | 1.00 | 1.00 | 0.66 | 0.77 | 0.87 | 0.88 | 1.00 | 0.55 | 0.66 | 0.76 | 0.77 | 0.87 | 0.39 | 0.48 | 0.57 | 0.58 | 0.68 |
| | | PI | 0.61 | 0.61 | 0.61 | 0.61 | 0.61 | 0.60 | 0.61 | 0.61 | 0.61 | 0.61 | 0.61 | 0.61 | 0.61 | 0.61 | 0.61 | 0.61 | 0.61 | 0.61 | 0.61 | 0.61 |
| | 23°F(-5.0°C) | TC | 11634 | 11685 | 11987 | 12046 | 12443 | 12224 | 12227 | 12229 | 12245 | 12456 | 12645 | 12650 | 12653 | 12653 | 12674 | 13446 | 13442 | 13451 | 13453 | 13461 |
| | | S/T | 0.83 | 0.95 | 1.00 | 1.00 | 1.00 | 0.66 | 0.78 | 0.88 | 0.89 | 1.00 | 0.56 | 0.67 | 0.76 | 0.78 | 0.89 | 0.39 | 0.48 | 0.57 | 0.59 | 0.69 |
| | | PI | 0.66 | 0.66 | 0.66 | 0.66 | 0.67 | 0.66 | 0.66 | 0.66 | 0.66 | 0.67 | 0.67 | 0.67 | 0.67 | 0.67 | 0.67 | 0.68 | 0.68 | 0.68 | 0.68 | 0.68 |
| | 35°F(1.7°C) | TC | 11161 | 11161 | 11227 | 11258 | 11621 | 11682 | 11682 | 11683 | 11683 | 11714 | 12048 | 12047 | 12048 | 12048 | 12049 | 12726 | 12723 | 12723 | 12722 | 12723 |
| | | S/T | 0.78 | 0.88 | 0.97 | 0.99 | 1.00 | 0.63 | 0.73 | 0.82 | 0.83 | 0.93 | 0.54 | 0.63 | 0.72 | 0.73 | 0.83 | 0.39 | 0.46 | 0.54 | 0.56 | 0.65 |
| | | PI | 0.72 | 0.72 | 0.72 | 0.73 | 0.76 | 0.76 | 0.76 | 0.76 | 0.76 | 0.76 | 0.79 | 0.79 | 0.80 | 0.80 | 0.80 | 0.86 | 0.86 | 0.86 | 0.86 | 0.86 |
| | 41°F(5.0°C) | TC | 11363 | 11364 | 11454 | 11534 | 11875 | 11892 | 11892 | 11892 | 11892 | 11934 | 12263 | 12262 | 12263 | 12263 | 12264 | 12951 | 12948 | 12947 | 12946 | 12948 |
| | | S/T | 0.78 | 0.89 | 0.98 | 1.00 | 1.00 | 0.64 | 0.74 | 0.83 | 0.84 | 0.94 | 0.54 | 0.64 | 0.72 | 0.74 | 0.84 | 0.39 | 0.47 | 0.55 | 0.56 | 0.66 |
| | | PI | 0.63 | 0.63 | 0.63 | 0.64 | 0.66 | 0.67 | 0.67 | 0.67 | 0.67 | 0.67 | 0.70 | 0.70 | 0.70 | 0.70 | 0.70 | 0.76 | 0.76 | 0.76 | 0.76 | 0.76 |
| | 47°F(8.3°C) | TC | 11566 | 11574 | 11729 | 11781 | 12130 | 12102 | 12102 | 12102 | 12102 | 12158 | 12478 | 12477 | 12478 | 12478 | 12478 | 13177 | 13173 | 13172 | 13172 | 13173 |
| | | S/T | 0.79 | 0.90 | 1.00 | 1.00 | 1.00 | 0.64 | 0.75 | 0.84 | 0.85 | 0.96 | 0.54 | 0.65 | 0.73 | 0.75 | 0.85 | 0.39 | 0.47 | 0.55 | 0.57 | 0.67 |
| | | PI | 0.53 | 0.53 | 0.54 | 0.55 | 0.57 | 0.57 | 0.57 | 0.57 | 0.57 | 0.57 | 0.60 | 0.60 | 0.60 | 0.60 | 0.60 | 0.65 | 0.65 | 0.65 | 0.65 | 0.65 |
| | 50°F(10.0°C) | TC | 11163 | 11470 | 11857 | 11926 | 12388 | 11793 | 11799 | 11881 | 11918 | 12400 | 12253 | 12269 | 12275 | 12276 | 12394 | 13097 | 13132 | 13166 | 13170 | 13186 |
| | | S/T | 0.90 | 1.00 | 1.00 | 1.00 | 1.00 | 0.71 | 0.85 | 0.96 | 0.99 | 1.00 | 0.59 | 0.72 | 0.83 | 0.85 | 0.99 | 0.40 | 0.50 | 0.60 | 0.62 | 0.74 |
| | | PI | 0.61 | 0.61 | 0.61 | 0.61 | 0.61 | 0.61 | 0.61 | 0.61 | 0.61 | 0.61 | 0.61 | 0.61 | 0.61 | 0.61 | 0.61 | 0.61 | 0.61 | 0.61 | 0.61 | 0.61 |
| | 59°F(15.0°C) | TC | 10577 | 10948 | 11336 | 11405 | 11869 | 11191 | 11206 | 11333 | 11418 | 11881 | 11652 | 11664 | 11668 | 11685 | 11891 | 12512 | 12537 | 12562 | 12565 | 12576 |
| | | S/T | 0.92 | 1.00 | 1.00 | 1.00 | 1.00 | 0.73 | 0.86 | 1.00 | 1.00 | 1.00 | 0.60 | 0.73 | 0.85 | 0.86 | 1.00 | 0.40 | 0.51 | 0.61 | 0.63 | 0.76 |
| | | PI | 0.66 | 0.66 | 0.66 | 0.66 | 0.67 | 0.66 | 0.66 | 0.66 | 0.66 | 0.67 | 0.67 | 0.67 | 0.66 | 0.67 | 0.67 | 0.67 | 0.67 | 0.67 | 0.67 | 0.67 |
| | 68°F(20.0°C) | TC | 9990 | 10416 | 10802 | 10871 | 11332 | 10576 | 10599 | 10814 | 10883 | 11343 | 11033 | 11041 | 11061 | 11071 | 11353 | 11888 | 11910 | 11929 | 11930 | 11937 |
| | | S/T | 0.95 | 1.00 | 1.00 | 1.00 | 1.00 | 0.74 | 0.89 | 1.00 | 1.00 | 1.00 | 0.61 | 0.75 | 0.87 | 0.89 | 1.00 | 0.40 | 0.51 | 0.63 | 0.65 | 0.78 |
| | | PI | 0.71 | 0.71 | 0.71 | 0.71 | 0.72 | 0.71 | 0.71 | 0.71 | 0.71 | 0.72 | 0.72 | 0.72 | 0.72 | 0.72 | 0.72 | 0.73 | 0.73 | 0.73 | 0.73 | 0.73 |
| | 77°F(25.0°C) | TC | 9399 | 9852 | 10237 | 10305 | 10766 | 9964 | 9996 | 10248 | 10317 | 10777 | 10415 | 10427 | 10454 | 10465 | 10786 | 11249 | 11283 | 11309 | 11312 | 11323 |
| | | S/T | 0.97 | 1.00 | 1.00 | 1.00 | 1.00 | 0.75 | 0.90 | 1.00 | 1.00 | 1.00 | 0.61 | 0.76 | 0.88 | 0.90 | 1.00 | 0.40 | 0.52 | 0.63 | 0.65 | 0.79 |
| | | PI | 0.76 | 0.76 | 0.77 | 0.77 | 0.77 | 0.76 | 0.76 | 0.77 | 0.77 | 0.77 | 0.77 | 0.77 | 0.77 | 0.77 | 0.77 | 0.78 | 0.78 | 0.78 | 0.78 | 0.78 |
| | 82°F(27.8°C) | TC | 9464 | 9948 | 10349 | 10419 | 10896 | 10029 | 10068 | 10358 | 10431 | 10907 | 10496 | 10509 | 10542 | 10555 | 10917 | 11348 | 11391 | 11421 | 11424 | 11436 |
| | | S/T | 0.99 | 1.00 | 1.00 | 1.00 | 1.00 | 0.76 | 0.91 | 1.00 | 1.00 | 1.00 | 0.62 | 0.77 | 0.89 | 0.92 | 1.00 | 0.40 | 0.52 | 0.64 | 0.66 | 0.80 |
| | | PI | 0.85 | 0.85 | 0.86 | 0.86 | 0.86 | 0.85 | 0.85 | 0.86 | 0.86 | 0.86 | 0.86 | 0.86 | 0.86 | 0.86 | 0.86 | 0.87 | 0.87 | 0.87 | 0.87 | 0.87 |
| | 86°F(30.0°C) | TC | 10045 | 10547 | 10978 | 11055 | 11569 | 10594 | 10642 | 10990 | 11067 | 11581 | 11095 | 11108 | 11149 | 11165 | 11591 | 12012 | 12059 | 12087 | 12090 | 12101 |
| | | S/T | 1.00 | 1.00 | 1.00 | 1.00 | 1.00 | 0.77 | 0.93 | 1.00 | 1.00 | 1.00 | 0.62 | 0.78 | 0.91 | 0.93 | 1.00 | 0.40 | 0.52 | 0.64 | 0.66 | 0.81 |
| | | PI | 0.99 | 1.00 | 1.00 | 1.01 | 1.01 | 1.00 | 1.00 | 1.01 | 1.01 | 1.01 | 1.01 | 1.01 | 1.01 | 1.01 | 1.01 | 1.02 | 1.02 | 1.02 | 1.02 | 1.02 |
| | 95°F(35.0°C) | TC | 11282 | 11343 | 11709 | 11779 | 12244 | 11990 | 11997 | 12001 | 12015 | 12260 | 12505 | 12507 | 12515 | 12516 | 12537 | 13475 | 13469 | 13472 | 13476 | 13494 |
| | | S/T | 0.83 | 0.95 | 1.00 | 1.00 | 1.00 | 0.66 | 0.78 | 0.88 | 0.89 | 1.00 | 0.56 | 0.67 | 0.76 | 0.78 | 0.88 | 0.39 | 0.48 | 0.57 | 0.58 | 0.68 |
| | | PI | 1.27 | 1.28 | 1.30 | 1.30 | 1.33 | 1.31 | 1.31 | 1.31 | 1.31 | 1.33 | 1.34 | 1.34 | 1.34 | 1.34 | 1.34 | 1.40 | 1.40 | 1.40 | 1.40 | 1.40 |
| | 104°F(40.0°C) | TC | 10374 | 10469 | 10863 | 10928 | 11364 | 11027 | 11034 | 11053 | 11065 | 11378 | 11498 | 11503 | 11509 | 11509 | 11542 | 12393 | 12388 | 12394 | 12398 | 12411 |
| | | S/T | 0.85 | 0.98 | 1.00 | 1.00 | 1.00 | 0.68 | 0.80 | 0.90 | 0.92 | 1.00 | 0.56 | 0.68 | 0.78 | 0.80 | 0.91 | 0.39 | 0.48 | 0.58 | 0.59 | 0.70 |
| | | PI | 1.26 | 1.27 | 1.29 | 1.30 | 1.32 | 1.30 | 1.30 | 1.30 | 1.30 | 1.32 | 1.33 | 1.33 | 1.33 | 1.33 | 1.33 | 1.39 | 1.39 | 1.38 | 1.39 | 1.39 |
| | 110°F(43.0°C) | TC | 9791 | 10168 | 10555 | 10624 | 11084 | 10424 | 10427 | 10544 | 10636 | 11096 | 10894 | 10902 | 10905 | 10913 | 11105 | 11791 | 11792 | 11810 | 11812 | 11819 |
| | | S/T | 0.92 | 1.00 | 1.00 | 1.00 | 1.00 | 0.72 | 0.87 | 0.99 | 1.00 | 1.00 | 0.60 | 0.73 | 0.85 | 0.86 | 1.00 | 0.40 | 0.51 | 0.61 | 0.63 | 0.76 |
| | | PI | 1.27 | 1.29 | 1.31 | 1.31 | 1.33 | 1.30 | 1.30 | 1.31 | 1.31 | 1.33 | 1.32 | 1.32 | 1.32 | 1.32 | 1.33 | 1.37 | 1.37 | 1.37 | 1.37 | 1.37 |
| | 115°F(46.0°C) | TC | 8614 | 9029 | 9385 | 9455 | 9872 | 9160 | 9178 | 9396 | 9467 | 9882 | 9587 | 9593 | 9606 | 9615 | 9890 | 10395 | 10403 | 10417 | 10419 | 10422 |
| | | S/T | 0.96 | 1.00 | 1.00 | 1.00 | 1.00 | 0.75 | 0.89 | 1.00 | 1.00 | 1.00 | 0.61 | 0.75 | 0.87 | 0.90 | 1.00 | 0.40 | 0.52 | 0.63 | 0.65 | 0.78 |
| | | PI | 1.13 | 1.15 | 1.16 | 1.17 | 1.18 | 1.15 | 1.15 | 1.16 | 1.17 | 1.18 | 1.17 | 1.17 | 1.17 | 1.17 | 1.18 | 1.21 | 1.21 | 1.20 | 1.20 | 1.20 |
| | 122°F(50.0°C) | TC | 7130 | 7523 | 7860 | 7919 | 8319 | 7357 | 7531 | 7869 | 7927 | 8326 | 7748 | 7746 | 7874 | 7934 | 8332 | 8460 | 8493 | 8495 | 8494 | 8505 |
| | | S/T | 1.00 | 1.00 | 1.00 | 1.00 | 1.00 | 0.84 | 1.00 | 1.00 | 1.00 | 1.00 | 0.67 | 0.85 | 1.00 | 1.00 | 1.00 | 0.41 | 0.55 | 0.69 | 0.72 | 0.88 |
| | | PI | 0.95 | 0.96 | 0.97 | 0.97 | 0.98 | 0.96 | 0.96 | 0.97 | 0.97 | 0.98 | 0.97 | 0.97 | 0.97 | 0.97 | 0.98 | 0.99 | 0.98 | 0.98 | 0.98 | 0.98 |

## Table 9 – 18K Cooling Performance

| AIRFLOW (CFM) | OUTDOOR DB (°F) | ID WB °F(°C) | 60.8°F(16.0°C) | | | | | 64.4°F(18.0°C) | | | | | 67°F(19.4°C) | | | | | 71.6°F(22.0°C) | | | | |
|---|---|---|---|---|---|---|---|---|---|---|---|---|---|---|---|---|---|---|---|---|---|---|
| | | ID DB °F °C | 73.4°F 23.0°C | 77.0°F 25.0°C | 80.0°F 26.7°C | 80.6°F 27.0°C | 84.2°F 29.0°C | 73.4°F 23.0°C | 77.0°F 25.0°C | 80.0°F 26.7°C | 80.6°F 27.0°C | 84.2°F 29.0°C | 73.4°F 23.0°C | 77.0°F 25.0°C | 80.0°F 26.7°C | 80.6°F 27.0°C | 84.2°F 29.0°C | 73.4°F 23.0°C | 77.0°F 25.0°C | 80.0°F 26.7°C | 80.6°F 27.0°C | 84.2°F 29.0°C |
| 265 | 5°F(-15.0°C) | TC | 15243 | 15243 | 15243 | 15243 | 15471 | 16004 | 16001 | 16001 | 16001 | 16002 | 16551 | 16550 | 16548 | 16547 | 16549 | 17600 | 17596 | 17592 | 17591 | 17591 |
| | | S/T | 0.73 | 0.82 | 0.90 | 0.91 | 1.00 | 0.60 | 0.69 | 0.76 | 0.77 | 0.86 | 0.52 | 0.60 | 0.67 | 0.68 | 0.77 | 0.39 | 0.47 | 0.52 | 0.53 | 0.61 |
| | | PI | 0.63 | 0.63 | 0.63 | 0.63 | 0.63 | 0.63 | 0.63 | 0.63 | 0.63 | 0.63 | 0.63 | 0.63 | 0.63 | 0.63 | 0.63 | 0.63 | 0.63 | 0.63 | 0.63 | 0.63 |
| | 14°F(-10.0°C) | TC | 15633 | 15631 | 15629 | 15628 | 15705 | 16454 | 16449 | 16447 | 16446 | 16443 | 17040 | 17036 | 17031 | 17031 | 17027 | 18153 | 18148 | 18144 | 18143 | 18137 |
| | | S/T | 0.73 | 0.81 | 0.89 | 0.90 | 0.99 | 0.60 | 0.68 | 0.75 | 0.76 | 0.85 | 0.52 | 0.60 | 0.66 | 0.68 | 0.76 | 0.39 | 0.47 | 0.51 | 0.53 | 0.60 |
| | | PI | 0.61 | 0.61 | 0.61 | 0.61 | 0.61 | 0.60 | 0.60 | 0.60 | 0.60 | 0.60 | 0.60 | 0.60 | 0.60 | 0.60 | 0.60 | 0.60 | 0.60 | 0.60 | 0.60 | 0.60 |
| | 17°F(-8.3°C) | TC | 15774 | 15771 | 15769 | 15768 | 15996 | 16602 | 16598 | 16594 | 16594 | 16594 | 17196 | 17195 | 17193 | 17192 | 17195 | 18357 | 18352 | 18347 | 18347 | 18348 |
| | | S/T | 0.73 | 0.82 | 0.89 | 0.91 | 1.00 | 0.60 | 0.69 | 0.76 | 0.77 | 0.85 | 0.52 | 0.60 | 0.67 | 0.68 | 0.76 | 0.39 | 0.47 | 0.52 | 0.53 | 0.61 |
| | | PI | 0.59 | 0.59 | 0.59 | 0.59 | 0.59 | 0.59 | 0.59 | 0.59 | 0.59 | 0.59 | 0.59 | 0.59 | 0.59 | 0.59 | 0.59 | 0.59 | 0.59 | 0.59 | 0.59 | 0.59 |
| | 23°F(-5.0°C) | TC | 15665 | 15666 | 15666 | 15676 | 15962 | 16508 | 16505 | 16505 | 16505 | 16507 | 17115 | 17114 | 17111 | 17111 | 17113 | 18281 | 18276 | 18272 | 18271 | 18271 |
| | | S/T | 0.74 | 0.83 | 0.90 | 0.91 | 1.00 | 0.61 | 0.69 | 0.77 | 0.78 | 0.86 | 0.52 | 0.60 | 0.67 | 0.69 | 0.77 | 0.39 | 0.47 | 0.52 | 0.53 | 0.61 |
| | | PI | 0.59 | 0.59 | 0.59 | 0.59 | 0.59 | 0.59 | 0.59 | 0.59 | 0.59 | 0.59 | 0.60 | 0.60 | 0.60 | 0.60 | 0.60 | 0.60 | 0.60 | 0.60 | 0.60 | 0.60 |
| | 35°F(1.7°C) | TC | 15575 | 15574 | 15573 | 15572 | 15594 | 16381 | 16380 | 16378 | 16378 | 16376 | 16952 | 16949 | 16948 | 16947 | 16945 | 18020 | 18015 | 18012 | 18011 | 18011 |
| | | S/T | 0.70 | 0.78 | 0.85 | 0.86 | 0.93 | 0.59 | 0.66 | 0.72 | 0.74 | 0.81 | 0.51 | 0.58 | 0.64 | 0.65 | 0.73 | 0.39 | 0.46 | 0.50 | 0.51 | 0.58 |
| | | PI | 0.55 | 0.55 | 0.55 | 0.55 | 0.55 | 0.58 | 0.58 | 0.58 | 0.58 | 0.58 | 0.61 | 0.61 | 0.61 | 0.61 | 0.61 | 0.66 | 0.66 | 0.66 | 0.66 | 0.66 |
| | 41°F(5.0°C) | TC | 15590 | 15588 | 15588 | 15587 | 15624 | 16391 | 16390 | 16388 | 16387 | 16386 | 16958 | 16954 | 16953 | 16953 | 16950 | 18018 | 18015 | 18011 | 18010 | 18009 |
| | | S/T | 0.71 | 0.79 | 0.86 | 0.87 | 0.95 | 0.59 | 0.67 | 0.73 | 0.74 | 0.82 | 0.51 | 0.59 | 0.65 | 0.66 | 0.73 | 0.39 | 0.46 | 0.51 | 0.52 | 0.59 |
| | | PI | 0.63 | 0.63 | 0.63 | 0.63 | 0.63 | 0.67 | 0.67 | 0.67 | 0.67 | 0.67 | 0.70 | 0.70 | 0.70 | 0.70 | 0.70 | 0.76 | 0.76 | 0.76 | 0.76 | 0.76 |
| | 47°F(8.3°C) | TC | 15603 | 15601 | 15600 | 15600 | 15654 | 16399 | 16397 | 16395 | 16395 | 16394 | 16963 | 16959 | 16958 | 16958 | 16955 | 18016 | 18012 | 18009 | 18008 | 18007 |
| | | S/T | 0.71 | 0.80 | 0.87 | 0.88 | 0.96 | 0.59 | 0.67 | 0.74 | 0.75 | 0.83 | 0.51 | 0.59 | 0.65 | 0.66 | 0.74 | 0.39 | 0.46 | 0.51 | 0.52 | 0.59 |
| | | PI | 0.71 | 0.71 | 0.71 | 0.71 | 0.71 | 0.75 | 0.75 | 0.75 | 0.75 | 0.75 | 0.79 | 0.79 | 0.79 | 0.79 | 0.79 | 0.86 | 0.86 | 0.86 | 0.86 | 0.86 |
| | 50°F(10.0°C) | TC | 15252 | 15255 | 15395 | 15520 | 16096 | 16175 | 16178 | 16183 | 16184 | 16243 | 16844 | 16846 | 16853 | 16855 | 16861 | 18142 | 18135 | 18137 | 18136 | 18152 |
| | | S/T | 0.79 | 0.89 | 0.99 | 1.00 | 1.00 | 0.64 | 0.74 | 0.82 | 0.84 | 0.94 | 0.54 | 0.64 | 0.72 | 0.73 | 0.83 | 0.39 | 0.46 | 0.54 | 0.56 | 0.65 |
| | | PI | 0.80 | 0.80 | 0.80 | 0.80 | 0.80 | 0.80 | 0.80 | 0.80 | 0.80 | 0.80 | 0.80 | 0.80 | 0.80 | 0.80 | 0.80 | 0.80 | 0.80 | 0.80 | 0.80 | 0.80 |
| | 59°F(15.0°C) | TC | 14895 | 14918 | 15212 | 15301 | 15899 | 15843 | 15846 | 15849 | 15850 | 15947 | 16536 | 16532 | 16539 | 16540 | 16544 | 17865 | 17858 | 17859 | 17859 | 17872 |
| | | S/T | 0.80 | 0.91 | 1.00 | 1.00 | 1.00 | 0.65 | 0.75 | 0.84 | 0.86 | 0.96 | 0.54 | 0.65 | 0.73 | 0.75 | 0.85 | 0.39 | 0.47 | 0.55 | 0.56 | 0.66 |
| | | PI | 0.84 | 0.84 | 0.85 | 0.85 | 0.85 | 0.85 | 0.85 | 0.85 | 0.85 | 0.85 | 0.85 | 0.85 | 0.85 | 0.85 | 0.85 | 0.86 | 0.86 | 0.86 | 0.86 | 0.86 |
| | 68°F(20.0°C) | TC | 14550 | 14598 | 15010 | 15102 | 15719 | 15516 | 15519 | 15521 | 15521 | 15708 | 16221 | 16218 | 16224 | 16225 | 16228 | 17578 | 17570 | 17571 | 17570 | 17584 |
| | | S/T | 0.82 | 0.94 | 1.00 | 1.00 | 1.00 | 0.66 | 0.77 | 0.86 | 0.88 | 1.00 | 0.55 | 0.66 | 0.75 | 0.77 | 0.87 | 0.39 | 0.47 | 0.56 | 0.57 | 0.67 |
| | | PI | 0.88 | 0.88 | 0.89 | 0.89 | 0.89 | 0.89 | 0.89 | 0.89 | 0.89 | 0.89 | 0.90 | 0.90 | 0.90 | 0.90 | 0.90 | 0.91 | 0.91 | 0.91 | 0.91 | 0.91 |
| | 77°F(25.0°C) | TC | 14184 | 14254 | 14743 | 14840 | 15478 | 15176 | 15182 | 15185 | 15200 | 15501 | 15902 | 15901 | 15909 | 15910 | 15930 | 17298 | 17290 | 17293 | 17293 | 17313 |
| | | S/T | 0.83 | 0.96 | 1.00 | 1.00 | 1.00 | 0.66 | 0.78 | 0.88 | 0.89 | 1.00 | 0.55 | 0.67 | 0.76 | 0.78 | 0.88 | 0.39 | 0.48 | 0.56 | 0.58 | 0.68 |
| | | PI | 0.93 | 0.93 | 0.94 | 0.94 | 0.94 | 0.94 | 0.94 | 0.94 | 0.94 | 0.94 | 0.94 | 0.94 | 0.94 | 0.94 | 0.94 | 0.95 | 0.95 | 0.95 | 0.95 | 0.95 |
| | 82°F(27.8°C) | TC | 14299 | 14391 | 14943 | 15042 | 15707 | 15325 | 15333 | 15346 | 15359 | 15730 | 16077 | 16078 | 16087 | 16088 | 16116 | 17523 | 17515 | 17518 | 17520 | 17543 |
| | | S/T | 0.84 | 0.97 | 1.00 | 1.00 | 1.00 | 0.67 | 0.79 | 0.88 | 0.90 | 1.00 | 0.56 | 0.67 | 0.77 | 0.78 | 0.89 | 0.39 | 0.48 | 0.57 | 0.58 | 0.68 |
| | | PI | 1.08 | 1.08 | 1.09 | 1.09 | 1.09 | 1.09 | 1.09 | 1.09 | 1.09 | 1.09 | 1.10 | 1.10 | 1.10 | 1.10 | 1.10 | 1.11 | 1.11 | 1.11 | 1.11 | 1.11 |
| | 86°F(30.0°C) | TC | 14792 | 14921 | 15543 | 15648 | 16351 | 15873 | 15880 | 15902 | 15918 | 16375 | 16662 | 16665 | 16673 | 16674 | 16712 | 18184 | 18175 | 18178 | 18182 | 18205 |
| | | S/T | 0.85 | 0.98 | 1.00 | 1.00 | 1.00 | 0.67 | 0.80 | 0.89 | 0.91 | 1.00 | 0.56 | 0.68 | 0.77 | 0.79 | 0.90 | 0.39 | 0.48 | 0.57 | 0.59 | 0.69 |
| | | PI | 1.35 | 1.35 | 1.36 | 1.36 | 1.37 | 1.37 | 1.37 | 1.37 | 1.37 | 1.37 | 1.37 | 1.37 | 1.37 | 1.37 | 1.37 | 1.39 | 1.39 | 1.39 | 1.39 | 1.39 |
| | 95°F(35.0°C) | TC | 16138 | 16138 | 16139 | 16158 | 16571 | 17219 | 17215 | 17214 | 17214 | 17217 | 17998 | 17997 | 17993 | 17993 | 17993 | 19504 | 19497 | 19492 | 19491 | 19491 |
| | | S/T | 0.74 | 0.83 | 0.91 | 0.92 | 1.00 | 0.61 | 0.69 | 0.77 | 0.78 | 0.87 | 0.52 | 0.60 | 0.67 | 0.69 | 0.77 | 0.39 | 0.47 | 0.52 | 0.53 | 0.61 |
| | | PI | 1.90 | 1.90 | 1.90 | 1.90 | 1.92 | 1.96 | 1.96 | 1.96 | 1.96 | 1.96 | 2.00 | 2.00 | 2.00 | 2.00 | 2.00 | 2.08 | 2.08 | 2.08 | 2.09 | 2.08 |
| | 104°F(40.0°C) | TC | 14214 | 14214 | 14240 | 14259 | 14735 | 15163 | 15160 | 15159 | 15160 | 15162 | 15849 | 15847 | 15844 | 15844 | 15846 | 17171 | 17165 | 17161 | 17160 | 17160 |
| | | S/T | 0.75 | 0.85 | 0.93 | 0.95 | 1.00 | 0.61 | 0.71 | 0.78 | 0.80 | 0.89 | 0.52 | 0.61 | 0.69 | 0.70 | 0.79 | 0.39 | 0.45 | 0.52 | 0.54 | 0.62 |
| | | PI | 1.86 | 1.86 | 1.87 | 1.87 | 1.90 | 1.92 | 1.92 | 1.92 | 1.92 | 1.92 | 1.96 | 1.96 | 1.96 | 1.96 | 1.96 | 2.04 | 2.04 | 2.04 | 2.04 | 2.04 |
| | 110°F(43.0°C) | TC | 12975 | 12994 | 13285 | 13371 | 13934 | 13893 | 13891 | 13894 | 13894 | 13974 | 14554 | 14553 | 14554 | 14555 | 14559 | 15831 | 15824 | 15824 | 15824 | 15823 |
| | | S/T | 0.80 | 0.91 | 1.00 | 1.00 | 1.00 | 0.64 | 0.75 | 0.84 | 0.86 | 0.96 | 0.54 | 0.65 | 0.73 | 0.75 | 0.85 | 0.39 | 0.47 | 0.55 | 0.56 | 0.66 |
| | | PI | 1.86 | 1.87 | 1.88 | 1.88 | 1.91 | 1.91 | 1.91 | 1.91 | 1.91 | 1.91 | 1.94 | 1.94 | 1.94 | 1.94 | 1.94 | 2.00 | 2.00 | 2.00 | 2.00 | 2.00 |
| | 115°F(46.0°C) | TC | 12146 | 12193 | 12609 | 12692 | 13248 | 13029 | 13030 | 13032 | 13032 | 13267 | 13666 | 13665 | 13669 | 13669 | 13670 | 14894 | 14887 | 14886 | 14885 | 14892 |
| | | S/T | 0.83 | 0.95 | 1.00 | 1.00 | 1.00 | 0.66 | 0.77 | 0.87 | 0.89 | 1.00 | 0.55 | 0.66 | 0.75 | 0.77 | 0.88 | 0.39 | 0.47 | 0.56 | 0.57 | 0.67 |
| | | PI | 1.75 | 1.75 | 1.77 | 1.77 | 1.79 | 1.78 | 1.78 | 1.78 | 1.78 | 1.79 | 1.81 | 1.81 | 1.81 | 1.81 | 1.81 | 1.86 | 1.86 | 1.86 | 1.86 | 1.86 |
| | 122°F(50.0°C) | TC | 10983 | 11458 | 11962 | 12048 | 12645 | 11845 | 11846 | 11949 | 12065 | 12662 | 12484 | 12487 | 12488 | 12487 | 12674 | 13719 | 13712 | 13721 | 13722 | 13725 |
| | | S/T | 0.93 | 1.00 | 1.00 | 1.00 | 1.00 | 0.72 | 0.86 | 0.99 | 1.00 | 1.00 | 0.59 | 0.73 | 0.84 | 0.86 | 1.00 | 0.39 | 0.50 | 0.61 | 0.62 | 0.75 |
| | | PI | 1.60 | 1.61 | 1.63 | 1.63 | 1.64 | 1.62 | 1.62 | 1.63 | 1.63 | 1.64 | 1.64 | 1.64 | 1.64 | 1.64 | 1.64 | 1.67 | 1.67 | 1.67 | 1.67 | 1.67 |

**Manufacturer reserves the right to change, at any time, specifications and designs without notice and without obligations.**

## Table 9 – 18K Cooling Performance (Continued)

| AIRFLOW (CFM) | OUTDOOR DB (°F) | ID WB °F(°C) | 60.8°F(16.0°C) | | | | | 64.4°F(18.0°C) | | | | | 67°F(19.4°C) | | | | | 71.6°F(22.0°C) | | | | |
|---|---|---|---|---|---|---|---|---|---|---|---|---|---|---|---|---|---|---|---|---|---|---|
| | | ID DB °F °C | 73.4°F 23.0°C | 77.0°F 25.0°C | 80.0°F 26.7°C | 80.6°F 27.0°C | 84.2°F 29.0°C | 73.4°F 23.0°C | 77.0°F 25.0°C | 80.0°F 26.7°C | 80.6°F 27.0°C | 84.2°F 29.0°C | 73.4°F 23.0°C | 77.0°F 25.0°C | 80.0°F 26.7°C | 80.6°F 27.0°C | 84.2°F 29.0°C | 73.4°F 23.0°C | 77.0°F 25.0°C | 80.0°F 26.7°C | 80.6°F 27.0°C | 84.2°F 29.0°C |
| 369 | 5°F(-15.0°C) | TC | 15216 | 15217 | 15265 | 15287 | 15734 | 15957 | 15956 | 15959 | 15959 | 15978 | 16488 | 16487 | 16489 | 16489 | 16492 | 17502 | 17497 | 17497 | 17496 | 17497 |
| | | S/T | 0.76 | 0.86 | 0.94 | 0.96 | 1.00 | 0.62 | 0.72 | 0.80 | 0.81 | 0.90 | 0.53 | 0.62 | 0.70 | 0.72 | 0.81 | 0.39 | 0.46 | 0.54 | 0.55 | 0.64 |
| | | PI | 0.60 | 0.60 | 0.60 | 0.60 | 0.60 | 0.60 | 0.60 | 0.60 | 0.60 | 0.60 | 0.61 | 0.61 | 0.61 | 0.61 | 0.61 | 0.62 | 0.62 | 0.62 | 0.62 | 0.62 |
| | 14°F(-10.0°C) | TC | 15614 | 15611 | 15608 | 15607 | 16050 | 16412 | 16407 | 16402 | 16401 | 16396 | 16982 | 16976 | 16970 | 16969 | 16962 | 18066 | 18061 | 18054 | 18053 | 18041 |
| | | S/T | 0.75 | 0.85 | 0.93 | 0.95 | 1.00 | 0.62 | 0.71 | 0.79 | 0.80 | 0.89 | 0.53 | 0.62 | 0.69 | 0.71 | 0.79 | 0.39 | 0.46 | 0.53 | 0.54 | 0.63 |
| | | PI | 0.58 | 0.58 | 0.58 | 0.58 | 0.58 | 0.58 | 0.58 | 0.58 | 0.58 | 0.58 | 0.58 | 0.58 | 0.58 | 0.58 | 0.58 | 0.58 | 0.58 | 0.58 | 0.58 | 0.58 |
| | 17°F(-8.3°C) | TC | 15745 | 15740 | 15781 | 15803 | 16277 | 16549 | 16543 | 16547 | 16548 | 16565 | 17129 | 17129 | 17131 | 17132 | 17138 | 18252 | 18247 | 18249 | 18248 | 18252 |
| | | S/T | 0.76 | 0.86 | 0.94 | 0.96 | 1.00 | 0.62 | 0.72 | 0.80 | 0.81 | 0.90 | 0.53 | 0.62 | 0.70 | 0.71 | 0.80 | 0.39 | 0.46 | 0.53 | 0.55 | 0.63 |
| | | PI | 0.57 | 0.57 | 0.57 | 0.57 | 0.57 | 0.57 | 0.57 | 0.57 | 0.57 | 0.57 | 0.57 | 0.57 | 0.57 | 0.57 | 0.57 | 0.57 | 0.57 | 0.57 | 0.57 | 0.57 |
| | 23°F(-5.0°C) | TC | 15639 | 15640 | 15704 | 15732 | 16248 | 16459 | 16459 | 16462 | 16462 | 16488 | 17049 | 17048 | 17050 | 17051 | 17054 | 18178 | 18173 | 18173 | 18173 | 18175 |
| | | S/T | 0.77 | 0.87 | 0.95 | 0.97 | 1.00 | 0.62 | 0.72 | 0.80 | 0.82 | 0.91 | 0.53 | 0.63 | 0.71 | 0.72 | 0.81 | 0.39 | 0.46 | 0.54 | 0.55 | 0.64 |
| | | PI | 0.57 | 0.57 | 0.57 | 0.57 | 0.57 | 0.57 | 0.57 | 0.57 | 0.57 | 0.57 | 0.58 | 0.58 | 0.58 | 0.58 | 0.58 | 0.59 | 0.59 | 0.59 | 0.59 | 0.59 |
| | 35°F(1.7°C) | TC | 15574 | 15573 | 15573 | 15573 | 15773 | 16348 | 16345 | 16344 | 16344 | 16344 | 16891 | 16890 | 16887 | 16887 | 16886 | 17907 | 17902 | 17899 | 17898 | 17897 |
| | | S/T | 0.73 | 0.81 | 0.89 | 0.90 | 1.00 | 0.60 | 0.68 | 0.76 | 0.77 | 0.85 | 0.52 | 0.60 | 0.67 | 0.68 | 0.76 | 0.39 | 0.47 | 0.52 | 0.53 | 0.60 |
| | | PI | 0.53 | 0.53 | 0.53 | 0.53 | 0.54 | 0.56 | 0.56 | 0.56 | 0.56 | 0.56 | 0.59 | 0.59 | 0.59 | 0.59 | 0.59 | 0.64 | 0.64 | 0.64 | 0.64 | 0.64 |
| | 41°F(5.0°C) | TC | 15547 | 15585 | 15585 | 15590 | 15846 | 16356 | 16353 | 16351 | 16352 | 16352 | 16897 | 16895 | 16892 | 16892 | 16891 | 17906 | 17902 | 17898 | 17897 | 17896 |
| | | S/T | 0.74 | 0.82 | 0.90 | 0.91 | 1.00 | 0.60 | 0.69 | 0.76 | 0.78 | 0.86 | 0.52 | 0.60 | 0.67 | 0.69 | 0.77 | 0.39 | 0.45 | 0.52 | 0.53 | 0.61 |
| | | PI | 0.61 | 0.61 | 0.61 | 0.61 | 0.62 | 0.65 | 0.65 | 0.65 | 0.65 | 0.65 | 0.68 | 0.68 | 0.68 | 0.68 | 0.68 | 0.74 | 0.74 | 0.74 | 0.74 | 0.74 |
| | 47°F(8.3°C) | TC | 15597 | 15596 | 15596 | 15612 | 15919 | 16362 | 16360 | 16358 | 16358 | 16359 | 16902 | 16900 | 16897 | 16897 | 16897 | 17906 | 17902 | 17898 | 17898 | 17896 |
| | | S/T | 0.74 | 0.83 | 0.91 | 0.92 | 1.00 | 0.61 | 0.70 | 0.77 | 0.78 | 0.87 | 0.52 | 0.61 | 0.68 | 0.69 | 0.78 | 0.39 | 0.45 | 0.52 | 0.53 | 0.62 |
| | | PI | 0.69 | 0.69 | 0.69 | 0.69 | 0.70 | 0.73 | 0.73 | 0.73 | 0.73 | 0.73 | 0.76 | 0.76 | 0.76 | 0.76 | 0.76 | 0.83 | 0.83 | 0.83 | 0.83 | 0.83 |
| | 50°F(10.0°C) | TC | 15216 | 15281 | 15712 | 15801 | 16398 | 16119 | 16129 | 16134 | 16150 | 16419 | 16774 | 16783 | 16793 | 16794 | 16819 | 18023 | 18016 | 18037 | 18042 | 18066 |
| | | S/T | 0.83 | 0.95 | 1.00 | 1.00 | 1.00 | 0.66 | 0.78 | 0.87 | 0.88 | 1.00 | 0.55 | 0.66 | 0.76 | 0.77 | 0.88 | 0.39 | 0.48 | 0.56 | 0.58 | 0.68 |
| | | PI | 0.78 | 0.78 | 0.78 | 0.78 | 0.78 | 0.78 | 0.78 | 0.78 | 0.78 | 0.78 | 0.78 | 0.78 | 0.78 | 0.78 | 0.78 | 0.78 | 0.78 | 0.78 | 0.78 | 0.78 |
| | 59°F(15.0°C) | TC | 14861 | 14967 | 15496 | 15589 | 16208 | 15791 | 15798 | 15822 | 15837 | 16229 | 16463 | 16472 | 16479 | 16480 | 16521 | 17756 | 17748 | 17766 | 17769 | 17788 |
| | | S/T | 0.85 | 0.97 | 1.00 | 1.00 | 1.00 | 0.67 | 0.79 | 0.89 | 0.91 | 1.00 | 0.56 | 0.68 | 0.77 | 0.79 | 0.90 | 0.39 | 0.48 | 0.57 | 0.59 | 0.69 |
| | | PI | 0.82 | 0.82 | 0.82 | 0.82 | 0.82 | 0.82 | 0.82 | 0.82 | 0.82 | 0.82 | 0.82 | 0.82 | 0.82 | 0.82 | 0.82 | 0.83 | 0.83 | 0.83 | 0.83 | 0.83 |
| | 68°F(20.0°C) | TC | 14516 | 14760 | 15297 | 15392 | 16031 | 15467 | 15472 | 15515 | 15534 | 16052 | 16152 | 16161 | 16166 | 16167 | 16230 | 17473 | 17466 | 17483 | 17486 | 17500 |
| | | S/T | 0.87 | 1.00 | 1.00 | 1.00 | 1.00 | 0.69 | 0.81 | 0.91 | 0.93 | 1.00 | 0.57 | 0.69 | 0.79 | 0.81 | 0.93 | 0.39 | 0.49 | 0.58 | 0.60 | 0.71 |
| | | PI | 0.86 | 0.86 | 0.86 | 0.86 | 0.87 | 0.86 | 0.86 | 0.86 | 0.86 | 0.87 | 0.87 | 0.87 | 0.87 | 0.87 | 0.87 | 0.88 | 0.88 | 0.88 | 0.88 | 0.88 |
| | 77°F(25.0°C) | TC | 14151 | 14481 | 15035 | 15134 | 15796 | 15129 | 15136 | 15194 | 15219 | 15816 | 15831 | 15845 | 15852 | 15853 | 15935 | 17189 | 17181 | 17208 | 17212 | 17232 |
| | | S/T | 0.88 | 1.00 | 1.00 | 1.00 | 1.00 | 0.69 | 0.82 | 0.93 | 0.95 | 1.00 | 0.57 | 0.70 | 0.80 | 0.82 | 0.94 | 0.39 | 0.49 | 0.59 | 0.60 | 0.72 |
| | | PI | 0.90 | 0.90 | 0.91 | 0.91 | 0.91 | 0.91 | 0.91 | 0.91 | 0.91 | 0.91 | 0.91 | 0.91 | 0.91 | 0.91 | 0.91 | 0.92 | 0.92 | 0.92 | 0.92 | 0.92 |
| | 82°F(27.8°C) | TC | 14277 | 14665 | 15242 | 15344 | 16033 | 15277 | 15286 | 15359 | 15390 | 16054 | 16004 | 16021 | 16029 | 16030 | 16131 | 17409 | 17412 | 17434 | 17439 | 17462 |
| | | S/T | 0.88 | 1.00 | 1.00 | 1.00 | 1.00 | 0.70 | 0.83 | 0.94 | 0.96 | 1.00 | 0.58 | 0.70 | 0.81 | 0.83 | 0.96 | 0.39 | 0.49 | 0.59 | 0.61 | 0.72 |
| | | PI | 1.05 | 1.05 | 1.05 | 1.06 | 1.06 | 1.06 | 1.06 | 1.06 | 1.06 | 1.06 | 1.06 | 1.06 | 1.06 | 1.06 | 1.06 | 1.07 | 1.07 | 1.07 | 1.07 | 1.07 |
| | 86°F(30.0°C) | TC | 14779 | 15245 | 15857 | 15964 | 16693 | 15825 | 15833 | 15927 | 15969 | 16715 | 16588 | 16606 | 16614 | 16615 | 16743 | 18067 | 18068 | 18094 | 18099 | 18120 |
| | | S/T | 0.90 | 1.00 | 1.00 | 1.00 | 1.00 | 0.71 | 0.84 | 0.96 | 0.98 | 1.00 | 0.58 | 0.71 | 0.82 | 0.84 | 0.97 | 0.39 | 0.50 | 0.60 | 0.61 | 0.73 |
| | | PI | 1.31 | 1.32 | 1.32 | 1.32 | 1.33 | 1.32 | 1.32 | 1.32 | 1.32 | 1.33 | 1.33 | 1.33 | 1.33 | 1.33 | 1.33 | 1.35 | 1.35 | 1.35 | 1.35 | 1.34 |
| | 95°F(35.0°C) | TC | 16118 | 16121 | 16210 | 16252 | 16921 | 17172 | 17170 | 17174 | 17175 | 17205 | 17929 | 17929 | 17928 | 17929 | 17937 | 19391 | 19384 | 19378 | 19387 | 19382 |
| | | S/T | 0.77 | 0.87 | 0.96 | 0.98 | 1.00 | 0.63 | 0.72 | 0.80 | 0.82 | 0.91 | 0.53 | 0.62 | 0.70 | 0.72 | 0.81 | 0.39 | 0.46 | 0.53 | 0.55 | 0.63 |
| | | PI | 1.84 | 1.84 | 1.84 | 1.84 | 1.88 | 1.89 | 1.89 | 1.89 | 1.89 | 1.90 | 1.94 | 1.94 | 1.94 | 1.94 | 1.94 | 2.02 | 2.02 | 2.02 | 2.02 | 2.02 |
| | 104°F(40.0°C) | TC | 14193 | 14195 | 14341 | 14473 | 15043 | 15118 | 15118 | 15122 | 15123 | 15177 | 15787 | 15786 | 15787 | 15788 | 15794 | 17069 | 17063 | 17058 | 17063 | 17062 |
| | | S/T | 0.79 | 0.89 | 0.99 | 1.00 | 1.00 | 0.63 | 0.74 | 0.82 | 0.84 | 0.94 | 0.54 | 0.64 | 0.72 | 0.73 | 0.83 | 0.39 | 0.46 | 0.54 | 0.55 | 0.65 |
| | | PI | 1.80 | 1.80 | 1.81 | 1.82 | 1.86 | 1.86 | 1.86 | 1.86 | 1.86 | 1.86 | 1.90 | 1.90 | 1.90 | 1.90 | 1.90 | 1.98 | 1.98 | 1.98 | 1.98 | 1.98 |
| | 110°F(43.0°C) | TC | 12953 | 13051 | 13555 | 13642 | 14224 | 13847 | 13852 | 13864 | 13877 | 14243 | 14497 | 14497 | 14502 | 14503 | 14528 | 15735 | 15730 | 15731 | 15732 | 15744 |
| | | S/T | 0.85 | 0.97 | 1.00 | 1.00 | 1.00 | 0.67 | 0.79 | 0.89 | 0.91 | 1.00 | 0.56 | 0.68 | 0.77 | 0.79 | 0.90 | 0.39 | 0.48 | 0.57 | 0.59 | 0.69 |
| | | PI | 1.81 | 1.81 | 1.83 | 1.84 | 1.86 | 1.85 | 1.85 | 1.85 | 1.85 | 1.87 | 1.88 | 1.88 | 1.88 | 1.88 | 1.88 | 1.94 | 1.94 | 1.94 | 1.94 | 1.94 |
| | 115°F(46.0°C) | TC | 12124 | 12383 | 12867 | 12952 | 13524 | 12988 | 12993 | 13028 | 13046 | 13542 | 13612 | 13615 | 13620 | 13620 | 13671 | 14807 | 14801 | 14805 | 14809 | 14820 |
| | | S/T | 0.88 | 1.00 | 1.00 | 1.00 | 1.00 | 0.69 | 0.82 | 0.92 | 0.94 | 1.00 | 0.57 | 0.69 | 0.80 | 0.82 | 0.94 | 0.39 | 0.49 | 0.58 | 0.60 | 0.71 |
| | | PI | 1.69 | 1.70 | 1.72 | 1.73 | 1.75 | 1.73 | 1.73 | 1.73 | 1.73 | 1.75 | 1.75 | 1.75 | 1.75 | 1.75 | 1.75 | 1.80 | 1.80 | 1.80 | 1.80 | 1.80 |
| | 122°F(50.0°C) | TC | 11043 | 11666 | 12182 | 12274 | 12887 | 11791 | 11821 | 12197 | 12289 | 12901 | 12420 | 12423 | 12443 | 12457 | 12914 | 13621 | 13626 | 13638 | 13638 | 13636 |
| | | S/T | 1.00 | 1.00 | 1.00 | 1.00 | 1.00 | 0.76 | 0.92 | 1.00 | 1.00 | 1.00 | 0.62 | 0.77 | 0.89 | 0.92 | 1.00 | 0.40 | 0.52 | 0.64 | 0.66 | 0.79 |
| | | PI | 1.55 | 1.57 | 1.58 | 1.58 | 1.60 | 1.57 | 1.57 | 1.58 | 1.58 | 1.60 | 1.59 | 1.59 | 1.59 | 1.59 | 1.60 | 1.62 | 1.62 | 1.61 | 1.61 | 1.61 |

## Table 9 – 18K Cooling Performance (Continued)

| AIRFLOW (CFM) | OUTDOOR DB (°F) | ID WB °F(°C) | 60.8°F(16.0°C) | | | | | 64.4°F(18.0°C) | | | | | 67°F(19.4°C) | | | | | 71.6°F(22.0°C) | | | | |
|---|---|---|---|---|---|---|---|---|---|---|---|---|---|---|---|---|---|---|---|---|---|---|
| | | ID DB °F °C | 73.4°F 23.0°C | 77.0°F 25.0°C | 80.0°F 26.7°C | 80.6°F 27.0°C | 84.2°F 29.0°C | 73.4°F 23.0°C | 77.0°F 25.0°C | 80.0°F 26.7°C | 80.6°F 27.0°C | 84.2°F 29.0°C | 73.4°F 23.0°C | 77.0°F 25.0°C | 80.0°F 26.7°C | 80.6°F 27.0°C | 84.2°F 29.0°C | 73.4°F 23.0°C | 77.0°F 25.0°C | 80.0°F 26.7°C | 80.6°F 27.0°C | 84.2°F 29.0°C |
| 447 | 5°F(-15.0°C) | TC | 15184 | 15198 | 15402 | 15473 | 15946 | 15906 | 15909 | 15911 | 15911 | 15990 | 16426 | 16425 | 16430 | 16430 | 16432 | 17408 | 17403 | 17403 | 17404 | 17414 |
| | | S/T | 0.79 | 0.90 | 1.00 | 1.00 | 1.00 | 0.64 | 0.75 | 0.84 | 0.85 | 0.96 | 0.54 | 0.65 | 0.73 | 0.75 | 0.85 | 0.39 | 0.47 | 0.55 | 0.57 | 0.66 |
| | | PI | 0.59 | 0.59 | 0.59 | 0.59 | 0.59 | 0.59 | 0.59 | 0.59 | 0.59 | 0.59 | 0.59 | 0.59 | 0.59 | 0.59 | 0.59 | 0.60 | 0.60 | 0.60 | 0.60 | 0.60 |
| | 14°F(-10.0°C) | TC | 15583 | 15577 | 15642 | 15779 | 16268 | 16365 | 16356 | 16348 | 16347 | 16338 | 16931 | 16923 | 16910 | 16908 | 16893 | 17995 | 17990 | 17977 | 17973 | 17945 |
| | | S/T | 0.78 | 0.89 | 0.99 | 1.00 | 1.00 | 0.64 | 0.74 | 0.82 | 0.84 | 0.94 | 0.54 | 0.64 | 0.72 | 0.74 | 0.83 | 0.39 | 0.47 | 0.55 | 0.56 | 0.65 |
| | | PI | 0.57 | 0.57 | 0.57 | 0.57 | 0.57 | 0.57 | 0.57 | 0.57 | 0.57 | 0.57 | 0.57 | 0.57 | 0.57 | 0.57 | 0.57 | 0.57 | 0.57 | 0.57 | 0.57 | 0.57 |
| | 17°F(-8.3°C) | TC | 15735 | 15739 | 15932 | 16024 | 16540 | 16525 | 16527 | 16530 | 16531 | 16609 | 17052 | 17059 | 17070 | 17071 | 17075 | 18186 | 18181 | 18183 | 18186 | 18203 |
| | | S/T | 0.79 | 0.89 | 1.00 | 1.00 | 1.00 | 0.64 | 0.74 | 0.83 | 0.85 | 0.95 | 0.55 | 0.65 | 0.73 | 0.75 | 0.85 | 0.39 | 0.47 | 0.55 | 0.57 | 0.66 |
| | | PI | 0.56 | 0.56 | 0.56 | 0.56 | 0.56 | 0.56 | 0.56 | 0.56 | 0.56 | 0.56 | 0.56 | 0.56 | 0.56 | 0.56 | 0.56 | 0.56 | 0.56 | 0.56 | 0.56 | 0.56 |
| | 23°F(-5.0°C) | TC | 15605 | 15626 | 15881 | 15959 | 16480 | 16406 | 16410 | 16412 | 16412 | 16509 | 16984 | 16984 | 16989 | 16990 | 16992 | 18079 | 18074 | 18074 | 18077 | 18089 |
| | | S/T | 0.80 | 0.91 | 1.00 | 1.00 | 1.00 | 0.65 | 0.75 | 0.84 | 0.86 | 0.97 | 0.54 | 0.65 | 0.74 | 0.75 | 0.85 | 0.39 | 0.47 | 0.56 | 0.57 | 0.66 |
| | | PI | 0.56 | 0.56 | 0.56 | 0.56 | 0.56 | 0.56 | 0.56 | 0.56 | 0.56 | 0.56 | 0.56 | 0.56 | 0.56 | 0.56 | 0.56 | 0.57 | 0.57 | 0.57 | 0.57 | 0.57 |
| | 35°F(1.7°C) | TC | 15559 | 15560 | 15590 | 15607 | 16008 | 16306 | 16303 | 16304 | 16305 | 16305 | 16830 | 16829 | 16827 | 16827 | 16829 | 17804 | 17800 | 17796 | 17799 | 17796 |
| | | S/T | 0.75 | 0.85 | 0.93 | 0.94 | 1.00 | 0.62 | 0.71 | 0.79 | 0.80 | 0.89 | 0.53 | 0.62 | 0.69 | 0.71 | 0.80 | 0.39 | 0.46 | 0.53 | 0.54 | 0.63 |
| | | PI | 0.52 | 0.52 | 0.52 | 0.52 | 0.54 | 0.55 | 0.55 | 0.55 | 0.55 | 0.55 | 0.57 | 0.57 | 0.57 | 0.57 | 0.57 | 0.62 | 0.62 | 0.62 | 0.62 | 0.62 |
| | 41°F(5.0°C) | TC | 15570 | 15570 | 15613 | 15634 | 16078 | 16313 | 16311 | 16312 | 16312 | 16326 | 16835 | 16833 | 16832 | 16832 | 16834 | 17804 | 17800 | 17796 | 17798 | 17796 |
| | | S/T | 0.76 | 0.86 | 0.94 | 0.96 | 1.00 | 0.62 | 0.72 | 0.80 | 0.81 | 0.90 | 0.53 | 0.62 | 0.70 | 0.71 | 0.81 | 0.39 | 0.46 | 0.53 | 0.55 | 0.64 |
| | | PI | 0.60 | 0.60 | 0.60 | 0.60 | 0.62 | 0.63 | 0.63 | 0.63 | 0.63 | 0.63 | 0.66 | 0.66 | 0.66 | 0.66 | 0.66 | 0.72 | 0.72 | 0.72 | 0.72 | 0.72 |
| | 47°F(8.3°C) | TC | 15579 | 15579 | 15639 | 15666 | 16148 | 16320 | 16318 | 16319 | 16319 | 16343 | 16840 | 16838 | 16837 | 16837 | 16838 | 17807 | 17802 | 17801 | 17800 | 17798 |
| | | S/T | 0.77 | 0.87 | 0.95 | 0.97 | 1.00 | 0.63 | 0.72 | 0.81 | 0.82 | 0.91 | 0.53 | 0.63 | 0.71 | 0.72 | 0.82 | 0.39 | 0.46 | 0.54 | 0.55 | 0.64 |
| | | PI | 0.67 | 0.67 | 0.67 | 0.67 | 0.70 | 0.71 | 0.71 | 0.71 | 0.71 | 0.72 | 0.75 | 0.75 | 0.75 | 0.75 | 0.75 | 0.81 | 0.81 | 0.81 | 0.81 | 0.81 |
| | 50°F(10.0°C) | TC | 15177 | 15425 | 15940 | 16032 | 16646 | 16069 | 16078 | 16131 | 16151 | 16665 | 16702 | 16723 | 16733 | 16734 | 16809 | 17905 | 17914 | 17957 | 17962 | 17986 |
| | | S/T | 0.87 | 1.00 | 1.00 | 1.00 | 1.00 | 0.69 | 0.81 | 0.92 | 0.94 | 1.00 | 0.57 | 0.69 | 0.80 | 0.81 | 0.93 | 0.39 | 0.49 | 0.58 | 0.60 | 0.71 |
| | | PI | 0.76 | 0.76 | 0.76 | 0.76 | 0.76 | 0.76 | 0.76 | 0.76 | 0.76 | 0.76 | 0.76 | 0.76 | 0.76 | 0.76 | 0.76 | 0.76 | 0.76 | 0.76 | 0.76 | 0.76 |
| | 59°F(15.0°C) | TC | 14837 | 15194 | 15729 | 15824 | 16461 | 15743 | 15750 | 15828 | 15858 | 16479 | 16396 | 16414 | 16421 | 16421 | 16530 | 17648 | 17653 | 17688 | 17692 | 17709 |
| | | S/T | 0.88 | 1.00 | 1.00 | 1.00 | 1.00 | 0.70 | 0.83 | 0.94 | 0.97 | 1.00 | 0.58 | 0.71 | 0.81 | 0.83 | 0.96 | 0.39 | 0.50 | 0.59 | 0.61 | 0.73 |
| | | PI | 0.80 | 0.80 | 0.80 | 0.80 | 0.81 | 0.80 | 0.80 | 0.80 | 0.80 | 0.81 | 0.81 | 0.81 | 0.81 | 0.81 | 0.81 | 0.81 | 0.81 | 0.81 | 0.81 | 0.81 |
| | 68°F(20.0°C) | TC | 14512 | 14980 | 15532 | 15630 | 16287 | 15419 | 15424 | 15545 | 15646 | 16305 | 16090 | 16104 | 16108 | 16109 | 16292 | 17374 | 17380 | 17408 | 17411 | 17423 |
| | | S/T | 0.91 | 1.00 | 1.00 | 1.00 | 1.00 | 0.72 | 0.85 | 0.97 | 1.00 | 1.00 | 0.59 | 0.72 | 0.84 | 0.86 | 0.99 | 0.40 | 0.50 | 0.61 | 0.62 | 0.75 |
| | | PI | 0.84 | 0.84 | 0.85 | 0.85 | 0.85 | 0.84 | 0.84 | 0.85 | 0.85 | 0.85 | 0.85 | 0.85 | 0.85 | 0.85 | 0.85 | 0.86 | 0.86 | 0.86 | 0.86 | 0.86 |
| | 77°F(25.0°C) | TC | 14161 | 14704 | 15274 | 15375 | 16055 | 15082 | 15089 | 15262 | 15393 | 16074 | 15770 | 15788 | 15796 | 15814 | 16088 | 17080 | 17096 | 17134 | 17138 | 17157 |
| | | S/T | 0.92 | 1.00 | 1.00 | 1.00 | 1.00 | 0.72 | 0.87 | 0.99 | 1.00 | 1.00 | 0.59 | 0.73 | 0.85 | 0.86 | 1.00 | 0.40 | 0.51 | 0.61 | 0.63 | 0.76 |
| | | PI | 0.88 | 0.89 | 0.89 | 0.89 | 0.90 | 0.89 | 0.89 | 0.89 | 0.89 | 0.90 | 0.89 | 0.89 | 0.89 | 0.89 | 0.90 | 0.90 | 0.90 | 0.90 | 0.90 | 0.90 |
| | 82°F(27.8°C) | TC | 14287 | 14893 | 15486 | 15592 | 16301 | 15230 | 15255 | 15505 | 15611 | 16319 | 15943 | 15964 | 15972 | 15997 | 16334 | 17293 | 17315 | 17358 | 17363 | 17384 |
| | | S/T | 0.94 | 1.00 | 1.00 | 1.00 | 1.00 | 0.73 | 0.87 | 1.00 | 1.00 | 1.00 | 0.60 | 0.74 | 0.86 | 0.87 | 1.00 | 0.40 | 0.51 | 0.62 | 0.63 | 0.76 |
| | | PI | 1.02 | 1.03 | 1.03 | 1.03 | 1.04 | 1.03 | 1.03 | 1.03 | 1.03 | 1.04 | 1.04 | 1.04 | 1.04 | 1.04 | 1.04 | 1.05 | 1.05 | 1.05 | 1.05 | 1.05 |
| | 86°F(30.0°C) | TC | 14781 | 15466 | 16093 | 16204 | 16959 | 15757 | 15790 | 16112 | 16223 | 16973 | 16509 | 16528 | 16554 | 16569 | 16988 | 17928 | 17954 | 17996 | 18000 | 18019 |
| | | S/T | 0.95 | 1.00 | 1.00 | 1.00 | 1.00 | 0.74 | 0.88 | 1.00 | 1.00 | 1.00 | 0.60 | 0.75 | 0.86 | 0.88 | 1.00 | 0.40 | 0.51 | 0.62 | 0.64 | 0.77 |
| | | PI | 1.28 | 1.29 | 1.30 | 1.30 | 1.31 | 1.29 | 1.29 | 1.30 | 1.30 | 1.30 | 1.30 | 1.30 | 1.30 | 1.30 | 1.30 | 1.32 | 1.32 | 1.31 | 1.31 | 1.31 |
| | 95°F(35.0°C) | TC | 16086 | 16114 | 16460 | 16557 | 17206 | 17114 | 17119 | 17124 | 17125 | 17241 | 17853 | 17855 | 17864 | 17866 | 17874 | 19273 | 19266 | 19268 | 19267 | 19282 |
| | | S/T | 0.80 | 0.91 | 1.00 | 1.00 | 1.00 | 0.65 | 0.75 | 0.84 | 0.86 | 0.96 | 0.54 | 0.65 | 0.73 | 0.75 | 0.85 | 0.39 | 0.47 | 0.55 | 0.56 | 0.66 |
| | | PI | 1.80 | 1.80 | 1.82 | 1.82 | 1.86 | 1.85 | 1.85 | 1.85 | 1.85 | 1.86 | 1.89 | 1.89 | 1.89 | 1.89 | 1.89 | 1.97 | 1.97 | 1.97 | 1.97 | 1.97 |
| | 104°F(40.0°C) | TC | 14162 | 14213 | 14622 | 14708 | 15292 | 15068 | 15073 | 15077 | 15078 | 15277 | 15720 | 15722 | 15731 | 15732 | 15737 | 16969 | 16962 | 16966 | 16963 | 16979 |
| | | S/T | 0.82 | 0.94 | 1.00 | 1.00 | 1.00 | 0.66 | 0.77 | 0.86 | 0.88 | 1.00 | 0.55 | 0.66 | 0.75 | 0.77 | 0.87 | 0.39 | 0.47 | 0.56 | 0.58 | 0.67 |
| | | PI | 1.76 | 1.77 | 1.79 | 1.80 | 1.83 | 1.82 | 1.82 | 1.82 | 1.82 | 1.83 | 1.86 | 1.86 | 1.86 | 1.86 | 1.86 | 1.93 | 1.93 | 1.93 | 1.93 | 1.93 |
| | 110°F(43.0°C) | TC | 12924 | 13274 | 13777 | 13866 | 14462 | 13806 | 13811 | 13871 | 13898 | 14478 | 14437 | 14446 | 14450 | 14451 | 14535 | 15649 | 15642 | 15658 | 15661 | 15672 |
| | | S/T | 0.89 | 1.00 | 1.00 | 1.00 | 1.00 | 0.70 | 0.83 | 0.94 | 0.96 | 1.00 | 0.58 | 0.70 | 0.81 | 0.83 | 0.96 | 0.39 | 0.49 | 0.59 | 0.61 | 0.73 |
| | | PI | 1.76 | 1.78 | 1.80 | 1.81 | 1.84 | 1.81 | 1.81 | 1.81 | 1.81 | 1.84 | 1.84 | 1.84 | 1.84 | 1.84 | 1.84 | 1.90 | 1.90 | 1.90 | 1.90 | 1.89 |
| | 115°F(46.0°C) | TC | 12113 | 12569 | 13063 | 13150 | 13737 | 12938 | 12941 | 13054 | 13167 | 13752 | 13555 | 13567 | 13571 | 13571 | 13765 | 14711 | 14704 | 14727 | 14729 | 14737 |
| | | S/T | 0.92 | 1.00 | 1.00 | 1.00 | 1.00 | 0.72 | 0.86 | 0.98 | 1.00 | 1.00 | 0.59 | 0.73 | 0.84 | 0.86 | 1.00 | 0.40 | 0.50 | 0.61 | 0.63 | 0.75 |
| | | PI | 1.65 | 1.67 | 1.69 | 1.69 | 1.71 | 1.68 | 1.68 | 1.69 | 1.69 | 1.72 | 1.71 | 1.71 | 1.71 | 1.71 | 1.72 | 1.76 | 1.76 | 1.76 | 1.76 | 1.76 |
| | 122°F(50.0°C) | TC | 11194 | 11808 | 12333 | 12426 | 13051 | 11713 | 11805 | 12347 | 12441 | 13064 | 12335 | 12334 | 12398 | 12435 | 13075 | 13499 | 13526 | 13533 | 13533 | 13525 |
| | | S/T | 1.00 | 1.00 | 1.00 | 1.00 | 1.00 | 0.80 | 0.98 | 1.00 | 1.00 | 1.00 | 0.64 | 0.81 | 0.95 | 0.98 | 1.00 | 0.41 | 0.54 | 0.67 | 0.69 | 0.84 |
| | | PI | 1.52 | 1.54 | 1.55 | 1.55 | 1.56 | 1.54 | 1.54 | 1.55 | 1.55 | 1.56 | 1.55 | 1.55 | 1.55 | 1.55 | 1.56 | 1.58 | 1.58 | 1.58 | 1.58 | 1.57 |

## Table 9 – 18K Cooling Performance (Continued)

| AIRFLOW (CFM) | OUTDOOR DB (°F) | ID WB °F(°C) | 60.8°F(16.0°C) | | | | | 64.4°F(18.0°C) | | | | | 67°F(19.4°C) | | | | | 71.6°F(22.0°C) | | | | |
|---|---|---|---|---|---|---|---|---|---|---|---|---|---|---|---|---|---|---|---|---|---|---|
| | | ID DB °F °C | 73.4°F 23.0°C | 77.0°F 25.0°C | 80.0°F 26.7°C | 80.6°F 27.0°C | 84.2°F 29.0°C | 73.4°F 23.0°C | 77.0°F 25.0°C | 80.0°F 26.7°C | 80.6°F 27.0°C | 84.2°F 29.0°C | 73.4°F 23.0°C | 77.0°F 25.0°C | 80.0°F 26.7°C | 80.6°F 27.0°C | 84.2°F 29.0°C | 73.4°F 23.0°C | 77.0°F 25.0°C | 80.0°F 26.7°C | 80.6°F 27.0°C | 84.2°F 29.0°C |
| 459 | 5°F(-15.0°C) | TC | 15146 | 15198 | 15545 | 15617 | 16098 | 15856 | 15860 | 15861 | 15878 | 16114 | 16363 | 16367 | 16371 | 16371 | 16393 | 17323 | 17318 | 17327 | 17329 | 17336 |
| | | S/T | 0.82 | 0.94 | 1.00 | 1.00 | 1.00 | 0.66 | 0.78 | 0.87 | 0.88 | 1.00 | 0.56 | 0.67 | 0.76 | 0.78 | 0.88 | 0.39 | 0.48 | 0.57 | 0.59 | 0.69 |
| | | PI | 0.58 | 0.58 | 0.58 | 0.58 | 0.58 | 0.58 | 0.58 | 0.58 | 0.58 | 0.58 | 0.58 | 0.58 | 0.58 | 0.58 | 0.59 | 0.60 | 0.60 | 0.60 | 0.60 | 0.60 |
| | 14°F(-10.0°C) | TC | 15556 | 15548 | 15865 | 15940 | 16434 | 16328 | 16314 | 16303 | 16301 | 16453 | 16888 | 16866 | 16849 | 16847 | 16830 | 17957 | 17951 | 17917 | 17911 | 17872 |
| | | S/T | 0.81 | 0.93 | 1.00 | 1.00 | 1.00 | 0.65 | 0.76 | 0.86 | 0.87 | 1.00 | 0.55 | 0.66 | 0.75 | 0.76 | 0.87 | 0.39 | 0.48 | 0.56 | 0.57 | 0.67 |
| | | PI | 0.56 | 0.56 | 0.56 | 0.56 | 0.56 | 0.56 | 0.56 | 0.56 | 0.56 | 0.56 | 0.56 | 0.56 | 0.56 | 0.56 | 0.56 | 0.56 | 0.56 | 0.56 | 0.56 | 0.56 |
| | 17°F(-8.3°C) | TC | 15655 | 15707 | 16070 | 16148 | 16672 | 16435 | 16442 | 16445 | 16458 | 16690 | 16996 | 17002 | 17009 | 17010 | 17031 | 18075 | 18070 | 18068 | 18071 | 18086 |
| | | S/T | 0.82 | 0.93 | 1.00 | 1.00 | 1.00 | 0.66 | 0.77 | 0.87 | 0.88 | 1.00 | 0.55 | 0.66 | 0.76 | 0.77 | 0.87 | 0.39 | 0.48 | 0.57 | 0.58 | 0.68 |
| | | PI | 0.55 | 0.55 | 0.55 | 0.55 | 0.55 | 0.55 | 0.55 | 0.55 | 0.55 | 0.55 | 0.55 | 0.55 | 0.55 | 0.55 | 0.55 | 0.56 | 0.56 | 0.56 | 0.56 | 0.56 |
| | 23°F(-5.0°C) | TC | 15566 | 15633 | 16037 | 16116 | 16647 | 16354 | 16359 | 16361 | 16382 | 16665 | 16918 | 16924 | 16928 | 16929 | 16956 | 17989 | 17983 | 17996 | 17998 | 18009 |
| | | S/T | 0.83 | 0.95 | 1.00 | 1.00 | 1.00 | 0.66 | 0.78 | 0.88 | 0.89 | 1.00 | 0.56 | 0.67 | 0.76 | 0.78 | 0.89 | 0.39 | 0.48 | 0.57 | 0.59 | 0.69 |
| | | PI | 0.55 | 0.55 | 0.55 | 0.55 | 0.55 | 0.55 | 0.55 | 0.55 | 0.55 | 0.55 | 0.56 | 0.56 | 0.56 | 0.56 | 0.56 | 0.57 | 0.57 | 0.57 | 0.57 | 0.57 |
| | 35°F(1.7°C) | TC | 15532 | 15532 | 15624 | 15667 | 16173 | 16258 | 16257 | 16259 | 16259 | 16302 | 16767 | 16766 | 16767 | 16767 | 16769 | 17711 | 17707 | 17706 | 17705 | 17707 |
| | | S/T | 0.78 | 0.88 | 0.97 | 0.99 | 1.00 | 0.63 | 0.73 | 0.82 | 0.83 | 0.93 | 0.54 | 0.63 | 0.72 | 0.73 | 0.83 | 0.39 | 0.46 | 0.54 | 0.56 | 0.65 |
| | | PI | 0.51 | 0.51 | 0.52 | 0.52 | 0.54 | 0.54 | 0.54 | 0.54 | 0.54 | 0.55 | 0.57 | 0.57 | 0.57 | 0.57 | 0.57 | 0.62 | 0.62 | 0.62 | 0.62 | 0.62 |
| | 41°F(5.0°C) | TC | 15542 | 15542 | 15666 | 15774 | 16241 | 16264 | 16264 | 16265 | 16265 | 16322 | 16772 | 16771 | 16772 | 16772 | 16773 | 17713 | 17709 | 17707 | 17707 | 17709 |
| | | S/T | 0.78 | 0.89 | 0.98 | 1.00 | 1.00 | 0.64 | 0.74 | 0.83 | 0.84 | 0.94 | 0.54 | 0.64 | 0.72 | 0.74 | 0.84 | 0.39 | 0.47 | 0.55 | 0.56 | 0.66 |
| | | PI | 0.59 | 0.59 | 0.59 | 0.60 | 0.62 | 0.62 | 0.62 | 0.62 | 0.62 | 0.63 | 0.65 | 0.65 | 0.65 | 0.65 | 0.65 | 0.71 | 0.71 | 0.71 | 0.71 | 0.71 |
| | 47°F(8.3°C) | TC | 15551 | 15561 | 15770 | 15840 | 16309 | 16272 | 16271 | 16272 | 16271 | 16347 | 16777 | 16776 | 16777 | 16777 | 16777 | 17716 | 17712 | 17710 | 17710 | 17711 |
| | | S/T | 0.79 | 0.90 | 1.00 | 1.00 | 1.00 | 0.64 | 0.75 | 0.84 | 0.85 | 0.96 | 0.54 | 0.65 | 0.73 | 0.75 | 0.85 | 0.39 | 0.47 | 0.55 | 0.57 | 0.67 |
| | | PI | 0.66 | 0.66 | 0.67 | 0.68 | 0.71 | 0.70 | 0.70 | 0.70 | 0.70 | 0.71 | 0.74 | 0.74 | 0.74 | 0.74 | 0.74 | 0.80 | 0.80 | 0.80 | 0.80 | 0.80 |
| | 50°F(10.0°C) | TC | 15162 | 15579 | 16105 | 16198 | 16826 | 16018 | 16027 | 16137 | 16188 | 16842 | 16643 | 16664 | 16673 | 16674 | 16834 | 17790 | 17837 | 17883 | 17888 | 17910 |
| | | S/T | 0.90 | 1.00 | 1.00 | 1.00 | 1.00 | 0.71 | 0.85 | 0.96 | 0.99 | 1.00 | 0.59 | 0.72 | 0.83 | 0.85 | 0.99 | 0.40 | 0.50 | 0.60 | 0.62 | 0.74 |
| | | PI | 0.75 | 0.75 | 0.75 | 0.75 | 0.75 | 0.75 | 0.75 | 0.75 | 0.75 | 0.75 | 0.75 | 0.75 | 0.75 | 0.75 | 0.75 | 0.75 | 0.75 | 0.75 | 0.75 | 0.75 |
| | 59°F(15.0°C) | TC | 14831 | 15352 | 15897 | 15993 | 16644 | 15692 | 15714 | 15892 | 16010 | 16661 | 16340 | 16356 | 16362 | 16386 | 16674 | 17546 | 17581 | 17616 | 17620 | 17634 |
| | | S/T | 0.92 | 1.00 | 1.00 | 1.00 | 1.00 | 0.73 | 0.86 | 1.00 | 1.00 | 1.00 | 0.60 | 0.73 | 0.85 | 0.86 | 1.00 | 0.40 | 0.51 | 0.61 | 0.63 | 0.76 |
| | | PI | 0.79 | 0.79 | 0.79 | 0.79 | 0.80 | 0.79 | 0.79 | 0.79 | 0.79 | 0.80 | 0.80 | 0.80 | 0.80 | 0.80 | 0.80 | 0.80 | 0.80 | 0.80 | 0.80 | 0.80 |
| | 68°F(20.0°C) | TC | 14496 | 15115 | 15675 | 15775 | 16444 | 15346 | 15381 | 15692 | 15792 | 16461 | 16010 | 16022 | 16051 | 16065 | 16474 | 17251 | 17283 | 17310 | 17312 | 17321 |
| | | S/T | 0.95 | 1.00 | 1.00 | 1.00 | 1.00 | 0.74 | 0.89 | 1.00 | 1.00 | 1.00 | 0.61 | 0.75 | 0.87 | 0.89 | 1.00 | 0.40 | 0.51 | 0.63 | 0.65 | 0.78 |
| | | PI | 0.83 | 0.83 | 0.84 | 0.84 | 0.84 | 0.83 | 0.83 | 0.84 | 0.84 | 0.84 | 0.84 | 0.84 | 0.84 | 0.84 | 0.84 | 0.85 | 0.85 | 0.85 | 0.85 | 0.85 |
| | 77°F(25.0°C) | TC | 14151 | 14833 | 15413 | 15516 | 16209 | 15002 | 15050 | 15430 | 15533 | 16225 | 15682 | 15699 | 15739 | 15757 | 16239 | 16937 | 16988 | 17027 | 17032 | 17047 |
| | | S/T | 0.97 | 1.00 | 1.00 | 1.00 | 1.00 | 0.75 | 0.90 | 1.00 | 1.00 | 1.00 | 0.61 | 0.76 | 0.88 | 0.90 | 1.00 | 0.40 | 0.52 | 0.63 | 0.65 | 0.79 |
| | | PI | 0.87 | 0.88 | 0.88 | 0.88 | 0.88 | 0.88 | 0.88 | 0.88 | 0.88 | 0.89 | 0.88 | 0.88 | 0.88 | 0.88 | 0.89 | 0.89 | 0.89 | 0.89 | 0.89 | 0.89 |
| | 82°F(27.8°C) | TC | 14288 | 15018 | 15623 | 15729 | 16450 | 15141 | 15200 | 15637 | 15747 | 16467 | 15845 | 15865 | 15915 | 15934 | 16481 | 17132 | 17197 | 17242 | 17246 | 17265 |
| | | S/T | 0.99 | 1.00 | 1.00 | 1.00 | 1.00 | 0.76 | 0.91 | 1.00 | 1.00 | 1.00 | 0.62 | 0.77 | 0.89 | 0.92 | 1.00 | 0.40 | 0.52 | 0.64 | 0.66 | 0.80 |
| | | PI | 1.01 | 1.02 | 1.02 | 1.02 | 1.03 | 1.02 | 1.02 | 1.02 | 1.02 | 1.03 | 1.02 | 1.02 | 1.02 | 1.02 | 1.03 | 1.04 | 1.03 | 1.03 | 1.03 | 1.03 |
| | 86°F(30.0°C) | TC | 14862 | 15604 | 16242 | 16355 | 17117 | 15673 | 15745 | 16260 | 16374 | 17135 | 16416 | 16435 | 16495 | 16519 | 17149 | 17772 | 17841 | 17883 | 17887 | 17904 |
| | | S/T | 1.00 | 1.00 | 1.00 | 1.00 | 1.00 | 0.77 | 0.93 | 1.00 | 1.00 | 1.00 | 0.62 | 0.78 | 0.91 | 0.93 | 1.00 | 0.40 | 0.52 | 0.64 | 0.66 | 0.81 |
| | | PI | 1.27 | 1.27 | 1.28 | 1.28 | 1.29 | 1.28 | 1.28 | 1.28 | 1.28 | 1.29 | 1.28 | 1.28 | 1.28 | 1.28 | 1.29 | 1.30 | 1.30 | 1.30 | 1.30 | 1.30 |
| | 95°F(35.0°C) | TC | 16046 | 16133 | 16654 | 16753 | 17415 | 17054 | 17064 | 17069 | 17089 | 17437 | 17786 | 17789 | 17800 | 17802 | 17832 | 19165 | 19158 | 19162 | 19167 | 19193 |
| | | S/T | 0.83 | 0.95 | 1.00 | 1.00 | 1.00 | 0.66 | 0.78 | 0.88 | 0.89 | 1.00 | 0.56 | 0.67 | 0.76 | 0.78 | 0.88 | 0.39 | 0.48 | 0.57 | 0.58 | 0.68 |
| | | PI | 1.77 | 1.78 | 1.80 | 1.81 | 1.85 | 1.83 | 1.83 | 1.83 | 1.83 | 1.85 | 1.87 | 1.87 | 1.87 | 1.87 | 1.87 | 1.94 | 1.94 | 1.94 | 1.94 | 1.95 |
| | 104°F(40.0°C) | TC | 14129 | 14258 | 14795 | 14884 | 15478 | 15019 | 15027 | 15054 | 15070 | 15497 | 15660 | 15666 | 15674 | 15675 | 15719 | 16879 | 16872 | 16880 | 16886 | 16904 |
| | | S/T | 0.85 | 0.98 | 1.00 | 1.00 | 1.00 | 0.68 | 0.80 | 0.90 | 0.92 | 1.00 | 0.56 | 0.68 | 0.78 | 0.80 | 0.91 | 0.39 | 0.48 | 0.58 | 0.59 | 0.70 |
| | | PI | 1.74 | 1.75 | 1.78 | 1.79 | 1.82 | 1.79 | 1.79 | 1.80 | 1.80 | 1.82 | 1.83 | 1.83 | 1.83 | 1.83 | 1.84 | 1.91 | 1.91 | 1.91 | 1.91 | 1.91 |
| | 110°F(43.0°C) | TC | 12929 | 13425 | 13937 | 14028 | 14635 | 13764 | 13768 | 13922 | 14044 | 14651 | 14384 | 14395 | 14399 | 14410 | 14663 | 15569 | 15570 | 15594 | 15596 | 15605 |
| | | S/T | 0.92 | 1.00 | 1.00 | 1.00 | 1.00 | 0.72 | 0.87 | 0.99 | 1.00 | 1.00 | 0.60 | 0.73 | 0.85 | 0.86 | 1.00 | 0.40 | 0.51 | 0.61 | 0.63 | 0.76 |
| | | PI | 1.74 | 1.77 | 1.79 | 1.79 | 1.82 | 1.78 | 1.78 | 1.79 | 1.80 | 1.82 | 1.81 | 1.81 | 1.81 | 1.81 | 1.82 | 1.87 | 1.87 | 1.87 | 1.87 | 1.87 |
| | 115°F(46.0°C) | TC | 12125 | 12709 | 13212 | 13310 | 13896 | 12895 | 12920 | 13227 | 13327 | 13911 | 13496 | 13504 | 13522 | 13536 | 13922 | 14633 | 14644 | 14665 | 14667 | 14671 |
| | | S/T | 0.96 | 1.00 | 1.00 | 1.00 | 1.00 | 0.75 | 0.89 | 1.00 | 1.00 | 1.00 | 0.61 | 0.75 | 0.87 | 0.90 | 1.00 | 0.40 | 0.52 | 0.63 | 0.65 | 0.78 |
| | | PI | 1.63 | 1.66 | 1.68 | 1.69 | 1.71 | 1.67 | 1.67 | 1.68 | 1.69 | 1.71 | 1.69 | 1.69 | 1.69 | 1.69 | 1.71 | 1.74 | 1.74 | 1.74 | 1.74 | 1.74 |
| | 122°F(50.0°C) | TC | 11186 | 11803 | 12331 | 12424 | 13051 | 11543 | 11815 | 12345 | 12437 | 13063 | 12156 | 12152 | 12354 | 12447 | 13071 | 13273 | 13324 | 13327 | 13326 | 13344 |
| | | S/T | 1.00 | 1.00 | 1.00 | 1.00 | 1.00 | 0.84 | 1.00 | 1.00 | 1.00 | 1.00 | 0.67 | 0.85 | 1.00 | 1.00 | 1.00 | 0.41 | 0.55 | 0.69 | 0.72 | 0.88 |
| | | PI | 1.50 | 1.52 | 1.53 | 1.53 | 1.54 | 1.51 | 1.52 | 1.53 | 1.53 | 1.55 | 1.53 | 1.53 | 1.53 | 1.53 | 1.54 | 1.56 | 1.56 | 1.55 | 1.55 | 1.55 |

## Table 10 – 24K Cooling Performance

| AIRFLOW (CFM) | OUTDOOR DB (°F) | ID WB °F (°C) | 60.8°F(16.0°C) | | | | | 64.4°F(18.0°C) | | | | | 67°F(19.4°C) | | | | | 71.6°F(22.0°C) | | | | |
|---|---|---|---|---|---|---|---|---|---|---|---|---|---|---|---|---|---|---|---|---|---|---|
| | | ID DB °F °C | 73.4°F 23.0°C | 77.0°F 25.0°C | 80.0°F 26.7°C | 80.6°F 27.0°C | 84.2°F 29.0°C | 73.4°F 23.0°C | 77.0°F 25.0°C | 80.0°F 26.7°C | 80.6°F 27.0°C | 84.2°F 29.0°C | 73.4°F 23.0°C | 77.0°F 25.0°C | 80.0°F 26.7°C | 80.6°F 27.0°C | 84.2°F 29.0°C | 73.4°F 23.0°C | 77.0°F 25.0°C | 80.0°F 26.7°C | 80.6°F 27.0°C | 84.2°F 29.0°C |
| 265 | 5°F(-15.0°C) | TC | 19271 | 19271 | 19271 | 19271 | 19559 | 20233 | 20230 | 20229 | 20229 | 20231 | 20925 | 20924 | 20921 | 20920 | 20922 | 22252 | 22246 | 22241 | 22240 | 22240 |
| | | S/T | 0.73 | 0.82 | 0.90 | 0.91 | 1.00 | 0.60 | 0.69 | 0.76 | 0.77 | 0.86 | 0.52 | 0.60 | 0.67 | 0.68 | 0.77 | 0.39 | 0.47 | 0.52 | 0.53 | 0.61 |
| | | PI | 1.50 | 1.50 | 1.50 | 1.50 | 1.50 | 1.50 | 1.50 | 1.50 | 1.50 | 1.50 | 1.50 | 1.50 | 1.50 | 1.50 | 1.50 | 1.52 | 1.52 | 1.52 | 1.52 | 1.52 |
| | 14°F(-10.0°C) | TC | 19294 | 19292 | 19289 | 19289 | 19383 | 20308 | 20302 | 20299 | 20299 | 20295 | 21031 | 21026 | 21021 | 21020 | 21016 | 22405 | 22399 | 22394 | 22393 | 22385 |
| | | S/T | 0.73 | 0.81 | 0.89 | 0.90 | 0.99 | 0.60 | 0.68 | 0.75 | 0.76 | 0.85 | 0.52 | 0.60 | 0.66 | 0.68 | 0.76 | 0.39 | 0.47 | 0.51 | 0.53 | 0.60 |
| | | PI | 1.35 | 1.35 | 1.35 | 1.35 | 1.35 | 1.34 | 1.34 | 1.34 | 1.34 | 1.34 | 1.33 | 1.33 | 1.33 | 1.33 | 1.33 | 1.33 | 1.33 | 1.33 | 1.33 | 1.33 |
| | 17°F(-8.3°C) | TC | 19317 | 19313 | 19310 | 19310 | 19588 | 20330 | 20325 | 20321 | 20321 | 20321 | 21058 | 21057 | 21054 | 21053 | 21057 | 22480 | 22473 | 22468 | 22467 | 22468 |
| | | S/T | 0.73 | 0.82 | 0.89 | 0.91 | 1.00 | 0.60 | 0.69 | 0.76 | 0.77 | 0.85 | 0.52 | 0.60 | 0.67 | 0.68 | 0.76 | 0.39 | 0.47 | 0.52 | 0.53 | 0.61 |
| | | PI | 1.29 | 1.29 | 1.29 | 1.29 | 1.29 | 1.28 | 1.28 | 1.28 | 1.28 | 1.28 | 1.28 | 1.28 | 1.28 | 1.28 | 1.28 | 1.28 | 1.28 | 1.28 | 1.28 | 1.28 |
| | 23°F(-5.0°C) | TC | 18600 | 18601 | 18601 | 18613 | 18953 | 19601 | 19597 | 19597 | 19597 | 19600 | 20321 | 20320 | 20317 | 20317 | 20319 | 21707 | 21700 | 21695 | 21694 | 21694 |
| | | S/T | 0.74 | 0.83 | 0.90 | 0.91 | 1.00 | 0.61 | 0.69 | 0.77 | 0.78 | 0.86 | 0.52 | 0.60 | 0.67 | 0.69 | 0.77 | 0.39 | 0.47 | 0.52 | 0.53 | 0.61 |
| | | PI | 1.28 | 1.28 | 1.28 | 1.28 | 1.28 | 1.28 | 1.28 | 1.28 | 1.28 | 1.28 | 1.28 | 1.28 | 1.28 | 1.28 | 1.29 | 1.30 | 1.30 | 1.30 | 1.30 | 1.30 |
| | 35°F(1.7°C) | TC | 17316 | 17315 | 17314 | 17314 | 17338 | 18213 | 18212 | 18210 | 18209 | 18208 | 18848 | 18844 | 18843 | 18842 | 18840 | 20035 | 20030 | 20026 | 20026 | 20025 |
| | | S/T | 0.70 | 0.78 | 0.85 | 0.86 | 0.93 | 0.59 | 0.66 | 0.72 | 0.74 | 0.81 | 0.51 | 0.58 | 0.64 | 0.65 | 0.73 | 0.39 | 0.46 | 0.50 | 0.51 | 0.58 |
| | | PI | 1.18 | 1.18 | 1.18 | 1.18 | 1.18 | 1.24 | 1.24 | 1.24 | 1.24 | 1.24 | 1.29 | 1.29 | 1.29 | 1.29 | 1.29 | 1.41 | 1.41 | 1.40 | 1.40 | 1.40 |
| | 41°F(5.0°C) | TC | 16616 | 16614 | 16613 | 16613 | 16652 | 17470 | 17468 | 17465 | 17465 | 17464 | 18073 | 18069 | 18068 | 18068 | 18065 | 19204 | 19200 | 19196 | 19195 | 19194 |
| | | S/T | 0.71 | 0.79 | 0.86 | 0.87 | 0.95 | 0.59 | 0.67 | 0.73 | 0.74 | 0.82 | 0.51 | 0.59 | 0.65 | 0.66 | 0.73 | 0.39 | 0.46 | 0.51 | 0.52 | 0.59 |
| | | PI | 1.07 | 1.07 | 1.07 | 1.07 | 1.07 | 1.14 | 1.14 | 1.14 | 1.14 | 1.14 | 1.19 | 1.19 | 1.19 | 1.19 | 1.19 | 1.29 | 1.29 | 1.29 | 1.29 | 1.29 |
| | 47°F(8.3°C) | TC | 15911 | 15909 | 15908 | 15908 | 15963 | 16723 | 16721 | 16719 | 16719 | 16718 | 17298 | 17294 | 17293 | 17293 | 17290 | 18372 | 18368 | 18365 | 18364 | 18362 |
| | | S/T | 0.71 | 0.80 | 0.87 | 0.88 | 0.96 | 0.59 | 0.67 | 0.74 | 0.75 | 0.83 | 0.51 | 0.59 | 0.65 | 0.66 | 0.74 | 0.39 | 0.46 | 0.51 | 0.52 | 0.59 |
| | | PI | 0.97 | 0.97 | 0.97 | 0.97 | 0.97 | 1.03 | 1.03 | 1.03 | 1.03 | 1.03 | 1.08 | 1.08 | 1.08 | 1.08 | 1.08 | 1.18 | 1.18 | 1.18 | 1.18 | 1.18 |
| | 50°F(10.0°C) | TC | 15678 | 15680 | 15824 | 15953 | 16545 | 16626 | 16630 | 16634 | 16635 | 16696 | 17314 | 17316 | 17323 | 17325 | 17332 | 18647 | 18640 | 18643 | 18642 | 18658 |
| | | S/T | 0.79 | 0.89 | 0.99 | 1.00 | 1.00 | 0.64 | 0.74 | 0.82 | 0.84 | 0.94 | 0.54 | 0.64 | 0.72 | 0.73 | 0.83 | 0.39 | 0.46 | 0.54 | 0.56 | 0.65 |
| | | PI | 1.11 | 1.11 | 1.11 | 1.11 | 1.11 | 1.11 | 1.11 | 1.11 | 1.11 | 1.11 | 1.11 | 1.11 | 1.11 | 1.11 | 1.11 | 1.11 | 1.11 | 1.11 | 1.11 | 1.11 |
| | 59°F(15.0°C) | TC | 15683 | 15707 | 16016 | 16110 | 16740 | 16681 | 16684 | 16687 | 16688 | 16790 | 17411 | 17406 | 17413 | 17414 | 17419 | 18810 | 18803 | 18804 | 18803 | 18817 |
| | | S/T | 0.80 | 0.91 | 1.00 | 1.00 | 1.00 | 0.65 | 0.75 | 0.84 | 0.86 | 0.96 | 0.54 | 0.65 | 0.73 | 0.75 | 0.85 | 0.39 | 0.47 | 0.55 | 0.56 | 0.66 |
| | | PI | 1.18 | 1.18 | 1.18 | 1.18 | 1.19 | 1.19 | 1.19 | 1.19 | 1.19 | 1.19 | 1.19 | 1.19 | 1.19 | 1.19 | 1.19 | 1.20 | 1.20 | 1.20 | 1.20 | 1.20 |
| | 68°F(20.0°C) | TC | 15698 | 15749 | 16194 | 16293 | 16959 | 16740 | 16743 | 16745 | 16746 | 16947 | 17501 | 17497 | 17504 | 17504 | 17508 | 18964 | 18956 | 18956 | 18956 | 18970 |
| | | S/T | 0.82 | 0.94 | 1.00 | 1.00 | 1.00 | 0.66 | 0.77 | 0.86 | 0.88 | 1.00 | 0.55 | 0.66 | 0.75 | 0.77 | 0.87 | 0.39 | 0.47 | 0.56 | 0.57 | 0.67 |
| | | PI | 1.26 | 1.26 | 1.26 | 1.26 | 1.27 | 1.27 | 1.27 | 1.27 | 1.27 | 1.27 | 1.28 | 1.28 | 1.28 | 1.28 | 1.28 | 1.29 | 1.29 | 1.29 | 1.29 | 1.29 |
| | 77°F(25.0°C) | TC | 15686 | 15763 | 16304 | 16411 | 17117 | 16783 | 16789 | 16792 | 16809 | 17142 | 17586 | 17584 | 17594 | 17595 | 17616 | 19130 | 19121 | 19123 | 19124 | 19146 |
| | | S/T | 0.83 | 0.96 | 1.00 | 1.00 | 1.00 | 0.66 | 0.78 | 0.88 | 0.89 | 1.00 | 0.55 | 0.67 | 0.76 | 0.78 | 0.88 | 0.39 | 0.48 | 0.56 | 0.58 | 0.68 |
| | | PI | 1.34 | 1.34 | 1.35 | 1.35 | 1.36 | 1.35 | 1.35 | 1.35 | 1.35 | 1.36 | 1.36 | 1.36 | 1.36 | 1.36 | 1.36 | 1.38 | 1.38 | 1.38 | 1.38 | 1.38 |
| | 82°F(27.8°C) | TC | 15708 | 15809 | 16416 | 16524 | 17255 | 16835 | 16844 | 16858 | 16873 | 17280 | 17661 | 17662 | 17672 | 17673 | 17704 | 19250 | 19241 | 19244 | 19246 | 19272 |
| | | S/T | 0.84 | 0.97 | 1.00 | 1.00 | 1.00 | 0.67 | 0.79 | 0.88 | 0.90 | 1.00 | 0.56 | 0.67 | 0.77 | 0.78 | 0.89 | 0.39 | 0.48 | 0.57 | 0.58 | 0.68 |
| | | PI | 1.48 | 1.48 | 1.49 | 1.49 | 1.50 | 1.49 | 1.49 | 1.49 | 1.49 | 1.50 | 1.50 | 1.50 | 1.50 | 1.50 | 1.50 | 1.51 | 1.51 | 1.51 | 1.51 | 1.51 |
| | 86°F(30.0°C) | TC | 15765 | 15902 | 16565 | 16677 | 17427 | 16917 | 16925 | 16948 | 16965 | 17452 | 17758 | 17761 | 17770 | 17771 | 17812 | 19380 | 19370 | 19374 | 19378 | 19402 |
| | | S/T | 0.85 | 0.98 | 1.00 | 1.00 | 1.00 | 0.67 | 0.80 | 0.89 | 0.91 | 1.00 | 0.56 | 0.68 | 0.77 | 0.79 | 0.90 | 0.39 | 0.48 | 0.57 | 0.59 | 0.69 |
| | | PI | 1.70 | 1.70 | 1.71 | 1.71 | 1.72 | 1.72 | 1.72 | 1.72 | 1.72 | 1.72 | 1.73 | 1.73 | 1.73 | 1.73 | 1.73 | 1.75 | 1.75 | 1.75 | 1.75 | 1.74 |
| | 95°F(35.0°C) | TC | 16137 | 16136 | 16138 | 16156 | 16570 | 17218 | 17213 | 17212 | 17212 | 17216 | 17997 | 17995 | 17991 | 17991 | 17991 | 19503 | 19496 | 19490 | 19490 | 19489 |
| | | S/T | 0.74 | 0.83 | 0.91 | 0.92 | 1.00 | 0.61 | 0.69 | 0.77 | 0.78 | 0.87 | 0.52 | 0.60 | 0.67 | 0.69 | 0.77 | 0.39 | 0.47 | 0.52 | 0.53 | 0.61 |
| | | PI | 2.12 | 2.12 | 2.12 | 2.12 | 2.15 | 2.19 | 2.19 | 2.19 | 2.19 | 2.19 | 2.24 | 2.23 | 2.23 | 2.23 | 2.23 | 2.33 | 2.33 | 2.33 | 2.33 | 2.33 |
| | 104°F(40.0°C) | TC | 13784 | 13785 | 13810 | 13828 | 14290 | 14705 | 14702 | 14702 | 14702 | 14705 | 15370 | 15369 | 15365 | 15365 | 15367 | 16653 | 16647 | 16643 | 16642 | 16642 |
| | | S/T | 0.75 | 0.85 | 0.93 | 0.95 | 1.00 | 0.61 | 0.71 | 0.78 | 0.80 | 0.89 | 0.52 | 0.61 | 0.69 | 0.70 | 0.79 | 0.39 | 0.45 | 0.52 | 0.54 | 0.62 |
| | | PI | 1.94 | 1.94 | 1.95 | 1.95 | 1.98 | 2.00 | 2.00 | 2.00 | 2.00 | 2.00 | 2.05 | 2.05 | 2.05 | 2.05 | 2.05 | 2.13 | 2.13 | 2.13 | 2.13 | 2.13 |
| | 110°F(43.0°C) | TC | 12294 | 12311 | 12588 | 12669 | 13203 | 13164 | 13162 | 13165 | 13165 | 13240 | 13790 | 13789 | 13790 | 13791 | 13794 | 15000 | 14993 | 14993 | 14993 | 14992 |
| | | S/T | 0.80 | 0.91 | 1.00 | 1.00 | 1.00 | 0.64 | 0.75 | 0.84 | 0.86 | 0.96 | 0.54 | 0.65 | 0.73 | 0.75 | 0.85 | 0.39 | 0.47 | 0.55 | 0.56 | 0.66 |
| | | PI | 1.86 | 1.86 | 1.87 | 1.88 | 1.90 | 1.90 | 1.90 | 1.90 | 1.90 | 1.91 | 1.93 | 1.93 | 1.93 | 1.93 | 1.93 | 2.00 | 2.00 | 2.00 | 2.00 | 2.00 |
| | 115°F(46.0°C) | TC | 10723 | 10764 | 11132 | 11205 | 11695 | 11502 | 11503 | 11505 | 11505 | 11713 | 12064 | 12064 | 12067 | 12068 | 12068 | 13148 | 13143 | 13142 | 13141 | 13147 |
| | | S/T | 0.83 | 0.95 | 1.00 | 1.00 | 1.00 | 0.66 | 0.77 | 0.87 | 0.89 | 1.00 | 0.55 | 0.66 | 0.75 | 0.77 | 0.88 | 0.39 | 0.47 | 0.56 | 0.57 | 0.67 |
| | | PI | 1.68 | 1.68 | 1.70 | 1.70 | 1.73 | 1.72 | 1.72 | 1.72 | 1.72 | 1.73 | 1.74 | 1.74 | 1.74 | 1.74 | 1.74 | 1.79 | 1.79 | 1.79 | 1.79 | 1.79 |
| | 122°F(50.0°C) | TC | 8592 | 8964 | 9358 | 9426 | 9892 | 9267 | 9267 | 9348 | 9439 | 9906 | 9766 | 9769 | 9769 | 9769 | 9916 | 10733 | 10727 | 10734 | 10735 | 10737 |
| | | S/T | 0.93 | 1.00 | 1.00 | 1.00 | 1.00 | 0.72 | 0.86 | 0.99 | 1.00 | 1.00 | 0.59 | 0.73 | 0.84 | 0.86 | 1.00 | 0.39 | 0.50 | 0.61 | 0.62 | 0.75 |
| | | PI | 1.45 | 1.46 | 1.47 | 1.48 | 1.49 | 1.47 | 1.47 | 1.47 | 1.48 | 1.49 | 1.49 | 1.49 | 1.49 | 1.49 | 1.49 | 1.51 | 1.51 | 1.51 | 1.51 | 1.51 |

## Table 10 – 24K Cooling Performance (Continued)

| AIRFLOW (CFM) | OUTDOOR DB (°F) | ID WB °F (°C) | 60.8°F(16.0°C) | | | | | 64.4°F(18.0°C) | | | | | 67°F(19.4°C) | | | | | 71.6°F(22.0°C) | | | | |
|---|---|---|---|---|---|---|---|---|---|---|---|---|---|---|---|---|---|---|---|---|---|---|
| | | ID DB °F °C | 73.4°F 23.0°C | 77.0°F 25.0°C | 80.0°F 26.7°C | 80.6°F 27.0°C | 84.2°F 29.0°C | 73.4°F 23.0°C | 77.0°F 25.0°C | 80.0°F 26.7°C | 80.6°F 27.0°C | 84.2°F 29.0°C | 73.4°F 23.0°C | 77.0°F 25.0°C | 80.0°F 26.7°C | 80.6°F 27.0°C | 84.2°F 29.0°C | 73.4°F 23.0°C | 77.0°F 25.0°C | 80.0°F 26.7°C | 80.6°F 27.0°C | 84.2°F 29.0°C |
| 369 | 5°F(-15.0°C) | TC | 21300 | 21302 | 21368 | 21399 | 22025 | 22337 | 22336 | 22339 | 22340 | 22366 | 23081 | 23080 | 23081 | 23082 | 23086 | 24499 | 24493 | 24493 | 24492 | 24494 |
| | | S/T | 0.76 | 0.86 | 0.94 | 0.96 | 1.00 | 0.62 | 0.72 | 0.80 | 0.81 | 0.90 | 0.53 | 0.62 | 0.70 | 0.72 | 0.81 | 0.39 | 0.46 | 0.54 | 0.55 | 0.64 |
| | | PI | 1.60 | 1.60 | 1.60 | 1.60 | 1.60 | 1.60 | 1.60 | 1.60 | 1.60 | 1.60 | 1.61 | 1.61 | 1.61 | 1.61 | 1.61 | 1.63 | 1.63 | 1.63 | 1.63 | 1.63 |
| | 14°F(-10.0°C) | TC | 21338 | 21333 | 21329 | 21328 | 21934 | 22428 | 22421 | 22415 | 22414 | 22407 | 23207 | 23200 | 23191 | 23190 | 23179 | 24688 | 24681 | 24671 | 24670 | 24654 |
| | | S/T | 0.75 | 0.85 | 0.93 | 0.95 | 1.00 | 0.62 | 0.71 | 0.79 | 0.80 | 0.89 | 0.53 | 0.62 | 0.69 | 0.71 | 0.79 | 0.39 | 0.46 | 0.53 | 0.54 | 0.63 |
| | | PI | 1.44 | 1.44 | 1.44 | 1.44 | 1.44 | 1.43 | 1.43 | 1.43 | 1.43 | 1.43 | 1.43 | 1.43 | 1.43 | 1.43 | 1.43 | 1.43 | 1.43 | 1.43 | 1.43 | 1.43 |
| | 17°F(-8.3°C) | TC | 21349 | 21342 | 21398 | 21428 | 22070 | 22439 | 22431 | 22436 | 22437 | 22461 | 23225 | 23225 | 23228 | 23230 | 23237 | 24748 | 24741 | 24743 | 24742 | 24748 |
| | | S/T | 0.76 | 0.86 | 0.94 | 0.96 | 1.00 | 0.62 | 0.72 | 0.80 | 0.81 | 0.90 | 0.53 | 0.62 | 0.70 | 0.71 | 0.80 | 0.39 | 0.46 | 0.53 | 0.55 | 0.63 |
| | | PI | 1.38 | 1.38 | 1.38 | 1.38 | 1.37 | 1.37 | 1.37 | 1.37 | 1.37 | 1.37 | 1.37 | 1.37 | 1.37 | 1.37 | 1.37 | 1.38 | 1.38 | 1.38 | 1.38 | 1.38 |
| | 23°F(-5.0°C) | TC | 20560 | 20561 | 20645 | 20682 | 21361 | 21638 | 21638 | 21642 | 21642 | 21677 | 22413 | 22413 | 22415 | 22416 | 22421 | 23898 | 23891 | 23892 | 23891 | 23895 |
| | | S/T | 0.77 | 0.87 | 0.95 | 0.97 | 1.00 | 0.62 | 0.72 | 0.80 | 0.82 | 0.91 | 0.53 | 0.63 | 0.71 | 0.72 | 0.81 | 0.39 | 0.46 | 0.54 | 0.55 | 0.64 |
| | | PI | 1.36 | 1.36 | 1.36 | 1.36 | 1.37 | 1.37 | 1.37 | 1.37 | 1.37 | 1.37 | 1.38 | 1.38 | 1.38 | 1.38 | 1.38 | 1.40 | 1.40 | 1.40 | 1.40 | 1.40 |
| | 35°F(1.7°C) | TC | 19172 | 19170 | 19171 | 19171 | 19417 | 20125 | 20121 | 20120 | 20120 | 20121 | 20794 | 20792 | 20789 | 20789 | 20788 | 22044 | 22039 | 22034 | 22033 | 22033 |
| | | S/T | 0.73 | 0.81 | 0.89 | 0.90 | 1.00 | 0.60 | 0.68 | 0.76 | 0.77 | 0.85 | 0.52 | 0.60 | 0.67 | 0.68 | 0.76 | 0.39 | 0.47 | 0.52 | 0.53 | 0.60 |
| | | PI | 1.26 | 1.26 | 1.26 | 1.26 | 1.28 | 1.33 | 1.33 | 1.33 | 1.33 | 1.33 | 1.39 | 1.39 | 1.39 | 1.39 | 1.39 | 1.51 | 1.51 | 1.51 | 1.51 | 1.51 |
| | 41°F(5.0°C) | TC | 18347 | 18391 | 18391 | 18397 | 18700 | 19301 | 19297 | 19295 | 19296 | 19296 | 19939 | 19937 | 19934 | 19934 | 19933 | 21130 | 21125 | 21120 | 21119 | 21118 |
| | | S/T | 0.74 | 0.82 | 0.90 | 0.91 | 1.00 | 0.60 | 0.69 | 0.76 | 0.78 | 0.86 | 0.52 | 0.60 | 0.67 | 0.69 | 0.77 | 0.39 | 0.45 | 0.52 | 0.53 | 0.61 |
| | | PI | 1.14 | 1.15 | 1.15 | 1.15 | 1.17 | 1.22 | 1.22 | 1.22 | 1.22 | 1.22 | 1.27 | 1.27 | 1.27 | 1.27 | 1.27 | 1.39 | 1.39 | 1.39 | 1.39 | 1.39 |
| | 47°F(8.3°C) | TC | 17611 | 17610 | 17610 | 17627 | 17974 | 18475 | 18472 | 18470 | 18470 | 18471 | 19084 | 19082 | 19079 | 19079 | 19078 | 20218 | 20213 | 20209 | 20208 | 20207 |
| | | S/T | 0.74 | 0.83 | 0.91 | 0.92 | 1.00 | 0.61 | 0.70 | 0.77 | 0.78 | 0.87 | 0.52 | 0.61 | 0.68 | 0.69 | 0.78 | 0.39 | 0.45 | 0.52 | 0.53 | 0.62 |
| | | PI | 1.04 | 1.04 | 1.04 | 1.04 | 1.06 | 1.11 | 1.11 | 1.11 | 1.11 | 1.11 | 1.16 | 1.16 | 1.16 | 1.16 | 1.16 | 1.26 | 1.26 | 1.26 | 1.26 | 1.26 |
| | 50°F(10.0°C) | TC | 17318 | 17391 | 17882 | 17983 | 18663 | 18345 | 18357 | 18362 | 18381 | 18687 | 19090 | 19101 | 19112 | 19114 | 19141 | 20512 | 20504 | 20528 | 20534 | 20561 |
| | | S/T | 0.83 | 0.95 | 1.00 | 1.00 | 1.00 | 0.66 | 0.78 | 0.87 | 0.88 | 1.00 | 0.55 | 0.66 | 0.76 | 0.77 | 0.88 | 0.39 | 0.48 | 0.56 | 0.58 | 0.68 |
| | | PI | 1.19 | 1.19 | 1.19 | 1.19 | 1.19 | 1.19 | 1.19 | 1.19 | 1.19 | 1.19 | 1.19 | 1.19 | 1.19 | 1.19 | 1.19 | 1.18 | 1.19 | 1.18 | 1.18 | 1.18 |
| | 59°F(15.0°C) | TC | 17325 | 17449 | 18065 | 18173 | 18895 | 18409 | 18418 | 18445 | 18462 | 18920 | 19193 | 19202 | 19212 | 19213 | 19260 | 20699 | 20690 | 20711 | 20715 | 20737 |
| | | S/T | 0.85 | 0.97 | 1.00 | 1.00 | 1.00 | 0.67 | 0.79 | 0.89 | 0.91 | 1.00 | 0.56 | 0.68 | 0.77 | 0.79 | 0.90 | 0.39 | 0.48 | 0.57 | 0.59 | 0.69 |
| | | PI | 1.27 | 1.27 | 1.27 | 1.27 | 1.28 | 1.27 | 1.27 | 1.27 | 1.27 | 1.28 | 1.28 | 1.28 | 1.28 | 1.28 | 1.28 | 1.29 | 1.29 | 1.29 | 1.29 | 1.28 |
| | 68°F(20.0°C) | TC | 17341 | 17632 | 18273 | 18387 | 19150 | 18476 | 18482 | 18534 | 18556 | 19175 | 19295 | 19305 | 19311 | 19312 | 19387 | 20873 | 20864 | 20884 | 20888 | 20905 |
| | | S/T | 0.87 | 1.00 | 1.00 | 1.00 | 1.00 | 0.69 | 0.81 | 0.91 | 0.93 | 1.00 | 0.57 | 0.69 | 0.79 | 0.81 | 0.93 | 0.39 | 0.49 | 0.58 | 0.60 | 0.71 |
| | | PI | 1.35 | 1.35 | 1.36 | 1.36 | 1.37 | 1.36 | 1.36 | 1.36 | 1.36 | 1.37 | 1.37 | 1.37 | 1.37 | 1.37 | 1.37 | 1.39 | 1.39 | 1.39 | 1.39 | 1.39 |
| | 77°F(25.0°C) | TC | 17327 | 17731 | 18410 | 18531 | 19341 | 18525 | 18533 | 18605 | 18635 | 19366 | 19384 | 19401 | 19410 | 19412 | 19512 | 21047 | 21037 | 21070 | 21076 | 21100 |
| | | S/T | 0.88 | 1.00 | 1.00 | 1.00 | 1.00 | 0.69 | 0.82 | 0.93 | 0.95 | 1.00 | 0.57 | 0.70 | 0.80 | 0.82 | 0.94 | 0.39 | 0.49 | 0.59 | 0.60 | 0.72 |
| | | PI | 1.44 | 1.44 | 1.45 | 1.45 | 1.46 | 1.45 | 1.45 | 1.45 | 1.45 | 1.46 | 1.46 | 1.46 | 1.46 | 1.46 | 1.46 | 1.48 | 1.48 | 1.47 | 1.47 | 1.47 |
| | 82°F(27.8°C) | TC | 17365 | 17837 | 18539 | 18664 | 19501 | 18582 | 18593 | 18682 | 18719 | 19527 | 19466 | 19487 | 19497 | 19498 | 19621 | 21175 | 21179 | 21206 | 21212 | 21239 |
| | | S/T | 0.88 | 1.00 | 1.00 | 1.00 | 1.00 | 0.70 | 0.83 | 0.94 | 0.96 | 1.00 | 0.58 | 0.70 | 0.81 | 0.83 | 0.96 | 0.39 | 0.49 | 0.59 | 0.61 | 0.72 |
| | | PI | 1.59 | 1.59 | 1.60 | 1.60 | 1.61 | 1.60 | 1.60 | 1.60 | 1.60 | 1.61 | 1.61 | 1.61 | 1.61 | 1.61 | 1.61 | 1.62 | 1.62 | 1.62 | 1.62 | 1.62 |
| | 86°F(30.0°C) | TC | 17440 | 17990 | 18712 | 18839 | 19698 | 18674 | 18684 | 18795 | 18845 | 19724 | 19575 | 19596 | 19605 | 19607 | 19758 | 21320 | 21321 | 21353 | 21358 | 21383 |
| | | S/T | 0.90 | 1.00 | 1.00 | 1.00 | 1.00 | 0.71 | 0.84 | 0.96 | 0.98 | 1.00 | 0.58 | 0.71 | 0.82 | 0.84 | 0.97 | 0.39 | 0.50 | 0.60 | 0.61 | 0.73 |
| | | PI | 1.82 | 1.83 | 1.84 | 1.84 | 1.85 | 1.84 | 1.84 | 1.84 | 1.84 | 1.85 | 1.85 | 1.85 | 1.85 | 1.85 | 1.85 | 1.87 | 1.87 | 1.87 | 1.87 | 1.87 |
| | 95°F(35.0°C) | TC | 17845 | 17848 | 17946 | 17993 | 18734 | 19011 | 19009 | 19014 | 19015 | 19048 | 19850 | 19850 | 19849 | 19850 | 19859 | 21468 | 21460 | 21454 | 21464 | 21458 |
| | | S/T | 0.77 | 0.87 | 0.96 | 0.98 | 1.00 | 0.63 | 0.72 | 0.80 | 0.82 | 0.91 | 0.53 | 0.62 | 0.70 | 0.72 | 0.81 | 0.39 | 0.46 | 0.53 | 0.55 | 0.63 |
| | | PI | 2.27 | 2.27 | 2.28 | 2.28 | 2.33 | 2.34 | 2.34 | 2.34 | 2.34 | 2.35 | 2.40 | 2.40 | 2.40 | 2.40 | 2.40 | 2.50 | 2.50 | 2.50 | 2.50 | 2.50 |
| | 104°F(40.0°C) | TC | 15240 | 15242 | 15399 | 15541 | 16154 | 16234 | 16233 | 16238 | 16239 | 16297 | 16952 | 16951 | 16952 | 16953 | 16960 | 18329 | 18323 | 18317 | 18323 | 18321 |
| | | S/T | 0.79 | 0.89 | 0.99 | 1.00 | 1.00 | 0.63 | 0.74 | 0.82 | 0.84 | 0.94 | 0.54 | 0.64 | 0.72 | 0.73 | 0.83 | 0.39 | 0.46 | 0.54 | 0.55 | 0.65 |
| | | PI | 2.08 | 2.08 | 2.09 | 2.10 | 2.14 | 2.15 | 2.15 | 2.15 | 2.15 | 2.15 | 2.19 | 2.19 | 2.19 | 2.19 | 2.19 | 2.29 | 2.28 | 2.28 | 2.28 | 2.28 |
| | 110°F(43.0°C) | TC | 13588 | 13692 | 14220 | 14311 | 14922 | 14527 | 14532 | 14545 | 14558 | 14943 | 15208 | 15208 | 15214 | 15215 | 15241 | 16508 | 16503 | 16503 | 16504 | 16517 |
| | | S/T | 0.85 | 0.97 | 1.00 | 1.00 | 1.00 | 0.67 | 0.79 | 0.89 | 0.91 | 1.00 | 0.56 | 0.68 | 0.77 | 0.79 | 0.90 | 0.39 | 0.48 | 0.57 | 0.59 | 0.69 |
| | | PI | 1.99 | 2.00 | 2.02 | 2.03 | 2.06 | 2.04 | 2.04 | 2.04 | 2.04 | 2.06 | 2.07 | 2.07 | 2.07 | 2.07 | 2.07 | 2.14 | 2.14 | 2.14 | 2.14 | 2.14 |
| | 115°F(46.0°C) | TC | 11851 | 12104 | 12577 | 12660 | 13219 | 12696 | 12700 | 12734 | 12752 | 13237 | 13305 | 13309 | 13313 | 13313 | 13363 | 14474 | 14467 | 14472 | 14475 | 14486 |
| | | S/T | 0.88 | 1.00 | 1.00 | 1.00 | 1.00 | 0.69 | 0.82 | 0.92 | 0.94 | 1.00 | 0.57 | 0.69 | 0.80 | 0.82 | 0.94 | 0.39 | 0.49 | 0.58 | 0.60 | 0.71 |
| | | PI | 1.80 | 1.81 | 1.83 | 1.84 | 1.86 | 1.84 | 1.84 | 1.84 | 1.84 | 1.86 | 1.87 | 1.87 | 1.87 | 1.87 | 1.87 | 1.92 | 1.92 | 1.92 | 1.92 | 1.92 |
| | 122°F(50.0°C) | TC | 9566 | 10105 | 10552 | 10631 | 11163 | 10213 | 10239 | 10566 | 10645 | 11175 | 10759 | 10761 | 10778 | 10790 | 11186 | 11799 | 11803 | 11813 | 11813 | 11812 |
| | | S/T | 1.00 | 1.00 | 1.00 | 1.00 | 1.00 | 0.76 | 0.92 | 1.00 | 1.00 | 1.00 | 0.62 | 0.77 | 0.89 | 0.92 | 1.00 | 0.40 | 0.52 | 0.64 | 0.66 | 0.79 |
| | | PI | 1.56 | 1.58 | 1.59 | 1.59 | 1.60 | 1.58 | 1.58 | 1.59 | 1.59 | 1.60 | 1.59 | 1.59 | 1.59 | 1.59 | 1.60 | 1.62 | 1.62 | 1.62 | 1.62 | 1.62 |

## Table 10 – 24K Cooling Performance (Continued)

| AIRFLOW (CFM) | OUTDOOR DB (°F) | ID WB °F (°C) | 60.8°F(16.0°C) | | | | | 64.4°F(18.0°C) | | | | | 67°F(19.4°C) | | | | | 71.6°F(22.0°C) | | | | |
|---|---|---|---|---|---|---|---|---|---|---|---|---|---|---|---|---|---|---|---|---|---|---|
| | | ID DB °F °C | 73.4°F 23.0°C | 77.0°F 25.0°C | 80.0°F 26.7°C | 80.6°F 27.0°C | 84.2°F 29.0°C | 73.4°F 23.0°C | 77.0°F 25.0°C | 80.0°F 26.7°C | 80.6°F 27.0°C | 84.2°F 29.0°C | 73.4°F 23.0°C | 77.0°F 25.0°C | 80.0°F 26.7°C | 80.6°F 27.0°C | 84.2°F 29.0°C | 73.4°F 23.0°C | 77.0°F 25.0°C | 80.0°F 26.7°C | 80.6°F 27.0°C | 84.2°F 29.0°C |
| 447 | 5°F(-15.0°C) | TC | 23534 | 23555 | 23873 | 23982 | 24716 | 24653 | 24658 | 24661 | 24661 | 24783 | 25460 | 25458 | 25465 | 25465 | 25468 | 26981 | 26973 | 26974 | 26976 | 26991 |
| | | S/T | 0.79 | 0.90 | 1.00 | 1.00 | 1.00 | 0.64 | 0.75 | 0.84 | 0.85 | 0.96 | 0.54 | 0.65 | 0.73 | 0.75 | 0.85 | 0.39 | 0.47 | 0.55 | 0.57 | 0.66 |
| | | PI | 1.72 | 1.72 | 1.72 | 1.72 | 1.73 | 1.73 | 1.73 | 1.73 | 1.73 | 1.73 | 1.74 | 1.74 | 1.74 | 1.74 | 1.74 | 1.77 | 1.77 | 1.77 | 1.77 | 1.77 |
| | 14°F(-10.0°C) | TC | 23579 | 23570 | 23668 | 23875 | 24616 | 24762 | 24748 | 24736 | 24734 | 24721 | 25618 | 25606 | 25586 | 25583 | 25561 | 27229 | 27221 | 27201 | 27195 | 27153 |
| | | S/T | 0.78 | 0.89 | 0.99 | 1.00 | 1.00 | 0.64 | 0.74 | 0.82 | 0.84 | 0.94 | 0.54 | 0.64 | 0.72 | 0.74 | 0.83 | 0.39 | 0.47 | 0.55 | 0.56 | 0.65 |
| | | PI | 1.56 | 1.56 | 1.56 | 1.56 | 1.55 | 1.55 | 1.55 | 1.55 | 1.55 | 1.55 | 1.55 | 1.55 | 1.55 | 1.55 | 1.55 | 1.55 | 1.55 | 1.55 | 1.55 | 1.55 |
| | 17°F(-8.3°C) | TC | 23623 | 23629 | 23919 | 24057 | 24831 | 24809 | 24811 | 24817 | 24817 | 24935 | 25600 | 25610 | 25627 | 25628 | 25634 | 27303 | 27295 | 27298 | 27303 | 27328 |
| | | S/T | 0.79 | 0.89 | 1.00 | 1.00 | 1.00 | 0.64 | 0.74 | 0.83 | 0.85 | 0.95 | 0.55 | 0.65 | 0.73 | 0.75 | 0.85 | 0.39 | 0.47 | 0.55 | 0.57 | 0.66 |
| | | PI | 1.49 | 1.49 | 1.49 | 1.49 | 1.49 | 1.48 | 1.49 | 1.49 | 1.49 | 1.49 | 1.48 | 1.48 | 1.49 | 1.49 | 1.49 | 1.50 | 1.50 | 1.50 | 1.50 | 1.50 |
| | 23°F(-5.0°C) | TC | 22715 | 22747 | 23117 | 23230 | 23989 | 23881 | 23887 | 23890 | 23891 | 24032 | 24723 | 24722 | 24730 | 24731 | 24735 | 26317 | 26309 | 26310 | 26313 | 26331 |
| | | S/T | 0.80 | 0.91 | 1.00 | 1.00 | 1.00 | 0.65 | 0.75 | 0.84 | 0.86 | 0.97 | 0.54 | 0.65 | 0.74 | 0.75 | 0.85 | 0.39 | 0.47 | 0.56 | 0.57 | 0.66 |
| | | PI | 1.47 | 1.47 | 1.48 | 1.48 | 1.48 | 1.48 | 1.48 | 1.48 | 1.48 | 1.48 | 1.49 | 1.49 | 1.49 | 1.49 | 1.49 | 1.52 | 1.52 | 1.52 | 1.52 | 1.52 |
| | 35°F(1.7°C) | TC | 21208 | 21208 | 21249 | 21273 | 21820 | 22225 | 22222 | 22223 | 22224 | 22224 | 22940 | 22938 | 22936 | 22936 | 22938 | 24268 | 24263 | 24257 | 24261 | 24256 |
| | | S/T | 0.75 | 0.85 | 0.93 | 0.94 | 1.00 | 0.62 | 0.71 | 0.79 | 0.80 | 0.89 | 0.53 | 0.62 | 0.69 | 0.71 | 0.80 | 0.39 | 0.46 | 0.53 | 0.54 | 0.63 |
| | | PI | 1.36 | 1.36 | 1.36 | 1.36 | 1.41 | 1.44 | 1.44 | 1.44 | 1.44 | 1.44 | 1.50 | 1.50 | 1.50 | 1.50 | 1.50 | 1.63 | 1.63 | 1.63 | 1.63 | 1.63 |
| | 41°F(5.0°C) | TC | 20343 | 20344 | 20400 | 20428 | 21007 | 21315 | 21312 | 21313 | 21313 | 21332 | 21997 | 21994 | 21992 | 21993 | 21995 | 23263 | 23257 | 23253 | 23255 | 23252 |
| | | S/T | 0.76 | 0.86 | 0.94 | 0.96 | 1.00 | 0.62 | 0.72 | 0.80 | 0.81 | 0.90 | 0.53 | 0.62 | 0.70 | 0.71 | 0.81 | 0.39 | 0.46 | 0.53 | 0.55 | 0.64 |
| | | PI | 1.24 | 1.24 | 1.25 | 1.25 | 1.29 | 1.32 | 1.32 | 1.32 | 1.32 | 1.32 | 1.38 | 1.38 | 1.38 | 1.38 | 1.38 | 1.50 | 1.50 | 1.50 | 1.50 | 1.50 |
| | 47°F(8.3°C) | TC | 19476 | 19477 | 19552 | 19586 | 20188 | 20403 | 20400 | 20401 | 20401 | 20432 | 21053 | 21051 | 21049 | 21049 | 21051 | 22261 | 22256 | 22254 | 22253 | 22250 |
| | | S/T | 0.77 | 0.87 | 0.95 | 0.97 | 1.00 | 0.63 | 0.72 | 0.81 | 0.82 | 0.91 | 0.53 | 0.63 | 0.71 | 0.72 | 0.82 | 0.39 | 0.46 | 0.54 | 0.55 | 0.64 |
| | | PI | 1.12 | 1.12 | 1.13 | 1.13 | 1.18 | 1.20 | 1.20 | 1.20 | 1.20 | 1.20 | 1.25 | 1.25 | 1.25 | 1.25 | 1.25 | 1.37 | 1.36 | 1.36 | 1.36 | 1.36 |
| | 50°F(10.0°C) | TC | 19125 | 19438 | 20087 | 20202 | 20976 | 20249 | 20261 | 20327 | 20353 | 21001 | 21046 | 21073 | 21086 | 21087 | 21182 | 22563 | 22574 | 22628 | 22635 | 22665 |
| | | S/T | 0.87 | 1.00 | 1.00 | 1.00 | 1.00 | 0.69 | 0.81 | 0.92 | 0.94 | 1.00 | 0.57 | 0.69 | 0.80 | 0.81 | 0.93 | 0.39 | 0.49 | 0.58 | 0.60 | 0.71 |
| | | PI | 1.28 | 1.29 | 1.28 | 1.28 | 1.28 | 1.28 | 1.28 | 1.28 | 1.28 | 1.28 | 1.28 | 1.28 | 1.28 | 1.28 | 1.28 | 1.28 | 1.28 | 1.28 | 1.28 | 1.28 |
| | 59°F(15.0°C) | TC | 19152 | 19613 | 20303 | 20425 | 21247 | 20320 | 20329 | 20430 | 20470 | 21272 | 21164 | 21187 | 21195 | 21196 | 21336 | 22780 | 22787 | 22831 | 22836 | 22859 |
| | | S/T | 0.88 | 1.00 | 1.00 | 1.00 | 1.00 | 0.70 | 0.83 | 0.94 | 0.97 | 1.00 | 0.58 | 0.71 | 0.81 | 0.83 | 0.96 | 0.39 | 0.50 | 0.59 | 0.61 | 0.73 |
| | | PI | 1.37 | 1.37 | 1.38 | 1.38 | 1.38 | 1.38 | 1.38 | 1.38 | 1.38 | 1.38 | 1.38 | 1.38 | 1.38 | 1.38 | 1.38 | 1.39 | 1.39 | 1.39 | 1.39 | 1.39 |
| | 68°F(20.0°C) | TC | 19194 | 19814 | 20543 | 20672 | 21541 | 20394 | 20400 | 20560 | 20694 | 21566 | 21282 | 21299 | 21305 | 21306 | 21548 | 22980 | 22987 | 23024 | 23028 | 23045 |
| | | S/T | 0.91 | 1.00 | 1.00 | 1.00 | 1.00 | 0.72 | 0.85 | 0.97 | 1.00 | 1.00 | 0.59 | 0.72 | 0.84 | 0.86 | 0.99 | 0.40 | 0.50 | 0.61 | 0.62 | 0.75 |
| | | PI | 1.46 | 1.47 | 1.47 | 1.47 | 1.48 | 1.47 | 1.47 | 1.47 | 1.47 | 1.48 | 1.48 | 1.48 | 1.48 | 1.48 | 1.48 | 1.50 | 1.50 | 1.50 | 1.50 | 1.50 |
| | 77°F(25.0°C) | TC | 19199 | 19934 | 20707 | 20845 | 21766 | 20447 | 20457 | 20692 | 20869 | 21791 | 21380 | 21405 | 21415 | 21440 | 21811 | 23156 | 23177 | 23229 | 23235 | 23260 |
| | | S/T | 0.92 | 1.00 | 1.00 | 1.00 | 1.00 | 0.72 | 0.87 | 0.99 | 1.00 | 1.00 | 0.59 | 0.73 | 0.85 | 0.86 | 1.00 | 0.40 | 0.51 | 0.61 | 0.63 | 0.76 |
| | | PI | 1.56 | 1.57 | 1.57 | 1.57 | 1.58 | 1.57 | 1.57 | 1.57 | 1.57 | 1.58 | 1.58 | 1.58 | 1.58 | 1.58 | 1.58 | 1.60 | 1.60 | 1.60 | 1.60 | 1.59 |
| | 82°F(27.8°C) | TC | 19241 | 20057 | 20856 | 20999 | 21953 | 20511 | 20545 | 20882 | 21024 | 21978 | 21471 | 21499 | 21510 | 21544 | 21998 | 23289 | 23319 | 23377 | 23384 | 23411 |
| | | S/T | 0.94 | 1.00 | 1.00 | 1.00 | 1.00 | 0.73 | 0.87 | 1.00 | 1.00 | 1.00 | 0.60 | 0.74 | 0.86 | 0.87 | 1.00 | 0.40 | 0.51 | 0.62 | 0.63 | 0.76 |
| | | PI | 1.72 | 1.73 | 1.73 | 1.74 | 1.74 | 1.73 | 1.73 | 1.73 | 1.74 | 1.74 | 1.74 | 1.74 | 1.74 | 1.74 | 1.74 | 1.76 | 1.76 | 1.76 | 1.76 | 1.76 |
| | 86°F(30.0°C) | TC | 19313 | 20207 | 21027 | 21172 | 22159 | 20588 | 20631 | 21052 | 21198 | 22176 | 21570 | 21596 | 21630 | 21649 | 22197 | 23424 | 23458 | 23513 | 23519 | 23544 |
| | | S/T | 0.95 | 1.00 | 1.00 | 1.00 | 1.00 | 0.74 | 0.88 | 1.00 | 1.00 | 1.00 | 0.60 | 0.75 | 0.86 | 0.88 | 1.00 | 0.40 | 0.51 | 0.62 | 0.64 | 0.77 |
| | | PI | 1.97 | 1.99 | 2.00 | 2.00 | 2.01 | 1.99 | 1.99 | 2.00 | 2.00 | 2.01 | 2.00 | 2.00 | 2.00 | 2.00 | 2.01 | 2.03 | 2.03 | 2.02 | 2.02 | 2.02 |
| | 95°F(35.0°C) | TC | 19718 | 19753 | 20178 | 20296 | 21092 | 20980 | 20985 | 20992 | 20993 | 21135 | 21885 | 21888 | 21899 | 21901 | 21910 | 23626 | 23617 | 23620 | 23619 | 23636 |
| | | S/T | 0.80 | 0.91 | 1.00 | 1.00 | 1.00 | 0.65 | 0.75 | 0.84 | 0.86 | 0.96 | 0.54 | 0.65 | 0.73 | 0.75 | 0.85 | 0.39 | 0.47 | 0.55 | 0.56 | 0.66 |
| | | PI | 2.46 | 2.46 | 2.49 | 2.49 | 2.54 | 2.54 | 2.54 | 2.54 | 2.54 | 2.55 | 2.59 | 2.59 | 2.59 | 2.59 | 2.59 | 2.70 | 2.70 | 2.70 | 2.70 | 2.70 |
| | 104°F(40.0°C) | TC | 16838 | 16898 | 17385 | 17487 | 18181 | 17915 | 17921 | 17926 | 17927 | 18163 | 18690 | 18693 | 18703 | 18704 | 18710 | 20175 | 20167 | 20172 | 20168 | 20187 |
| | | S/T | 0.82 | 0.94 | 1.00 | 1.00 | 1.00 | 0.66 | 0.77 | 0.86 | 0.88 | 1.00 | 0.55 | 0.66 | 0.75 | 0.77 | 0.87 | 0.39 | 0.47 | 0.56 | 0.58 | 0.67 |
| | | PI | 2.26 | 2.26 | 2.29 | 2.30 | 2.34 | 2.32 | 2.32 | 2.32 | 2.32 | 2.34 | 2.38 | 2.37 | 2.37 | 2.37 | 2.37 | 2.47 | 2.47 | 2.47 | 2.47 | 2.47 |
| | 110°F(43.0°C) | TC | 15012 | 15418 | 16003 | 16107 | 16799 | 16037 | 16043 | 16113 | 16144 | 16817 | 16770 | 16780 | 16785 | 16785 | 16883 | 18178 | 18170 | 18188 | 18191 | 18205 |
| | | S/T | 0.89 | 1.00 | 1.00 | 1.00 | 1.00 | 0.70 | 0.83 | 0.94 | 0.96 | 1.00 | 0.58 | 0.70 | 0.81 | 0.83 | 0.96 | 0.39 | 0.49 | 0.59 | 0.61 | 0.73 |
| | | PI | 2.16 | 2.18 | 2.20 | 2.21 | 2.24 | 2.21 | 2.21 | 2.21 | 2.21 | 2.25 | 2.25 | 2.24 | 2.24 | 2.24 | 2.25 | 2.32 | 2.32 | 2.32 | 2.32 | 2.32 |
| | 115°F(46.0°C) | TC | 13109 | 13603 | 14138 | 14233 | 14867 | 14002 | 14006 | 14128 | 14251 | 14884 | 14670 | 14684 | 14688 | 14688 | 14898 | 15921 | 15914 | 15939 | 15941 | 15949 |
| | | S/T | 0.92 | 1.00 | 1.00 | 1.00 | 1.00 | 0.72 | 0.86 | 0.98 | 1.00 | 1.00 | 0.59 | 0.73 | 0.84 | 0.86 | 1.00 | 0.40 | 0.50 | 0.61 | 0.63 | 0.75 |
| | | PI | 1.95 | 1.97 | 1.99 | 1.99 | 2.02 | 1.99 | 1.98 | 1.99 | 2.00 | 2.02 | 2.02 | 2.02 | 2.02 | 2.02 | 2.02 | 2.07 | 2.07 | 2.07 | 2.07 | 2.07 |
| | 122°F(50.0°C) | TC | 10736 | 11324 | 11828 | 11918 | 12517 | 11234 | 11322 | 11842 | 11932 | 12530 | 11830 | 11829 | 11891 | 11927 | 12540 | 12947 | 12973 | 12979 | 12979 | 12972 |
| | | S/T | 1.00 | 1.00 | 1.00 | 1.00 | 1.00 | 0.80 | 0.98 | 1.00 | 1.00 | 1.00 | 0.64 | 0.81 | 0.95 | 0.98 | 1.00 | 0.41 | 0.54 | 0.67 | 0.69 | 0.84 |
| | | PI | 1.69 | 1.71 | 1.72 | 1.72 | 1.74 | 1.71 | 1.71 | 1.72 | 1.72 | 1.74 | 1.72 | 1.72 | 1.72 | 1.72 | 1.74 | 1.76 | 1.76 | 1.75 | 1.75 | 1.75 |

## Table 10 – 24K Cooling Performance (Continued)

| AIRFLOW (CFM) | OUTDOOR DB (°F) | ID WB °F (°C) | 60.8°F(16.0°C) | | | | | 64.4°F(18.0°C) | | | | | 67°F(19.4°C) | | | | | 71.6°F(22.0°C) | | | | |
|---|---|---|---|---|---|---|---|---|---|---|---|---|---|---|---|---|---|---|---|---|---|---|
| | | ID DB °F °C | 73.4°F 23.0°C | 77.0°F 25.0°C | 80.0°F 26.7°C | 80.6°F 27.0°C | 84.2°F 29.0°C | 73.4°F 23.0°C | 77.0°F 25.0°C | 80.0°F 26.7°C | 80.6°F 27.0°C | 84.2°F 29.0°C | 73.4°F 23.0°C | 77.0°F 25.0°C | 80.0°F 26.7°C | 80.6°F 27.0°C | 84.2°F 29.0°C | 73.4°F 23.0°C | 77.0°F 25.0°C | 80.0°F 26.7°C | 80.6°F 27.0°C | 84.2°F 29.0°C |
| 459 | 5°F(-15.0°C) | TC | 25992 | 26082 | 26678 | 26801 | 27627 | 27211 | 27218 | 27220 | 27248 | 27654 | 28081 | 28089 | 28094 | 28095 | 28133 | 29729 | 29720 | 29735 | 29738 | 29751 |
| | | S/T | 0.82 | 0.94 | 1.00 | 1.00 | 1.00 | 0.66 | 0.78 | 0.87 | 0.88 | 1.00 | 0.56 | 0.67 | 0.76 | 0.78 | 0.88 | 0.39 | 0.48 | 0.57 | 0.59 | 0.69 |
| | | PI | 1.88 | 1.88 | 1.88 | 1.88 | 1.89 | 1.89 | 1.89 | 1.89 | 1.89 | 1.89 | 1.90 | 1.90 | 1.90 | 1.90 | 1.90 | 1.94 | 1.94 | 1.94 | 1.94 | 1.94 |
| | 14°F(-10.0°C) | TC | 26061 | 26048 | 26580 | 26705 | 27533 | 27355 | 27331 | 27313 | 27310 | 27565 | 28293 | 28257 | 28228 | 28224 | 28195 | 30084 | 30075 | 30017 | 30007 | 29943 |
| | | S/T | 0.81 | 0.93 | 1.00 | 1.00 | 1.00 | 0.65 | 0.76 | 0.86 | 0.87 | 1.00 | 0.55 | 0.66 | 0.75 | 0.76 | 0.87 | 0.39 | 0.48 | 0.56 | 0.57 | 0.67 |
| | | PI | 1.70 | 1.70 | 1.70 | 1.70 | 1.69 | 1.69 | 1.69 | 1.69 | 1.69 | 1.69 | 1.69 | 1.69 | 1.69 | 1.69 | 1.69 | 1.70 | 1.70 | 1.70 | 1.70 | 1.70 |
| | 17°F(-8.3°C) | TC | 26024 | 26108 | 26712 | 26842 | 27714 | 27319 | 27330 | 27335 | 27358 | 27744 | 28251 | 28262 | 28273 | 28274 | 28309 | 30046 | 30038 | 30033 | 30039 | 30064 |
| | | S/T | 0.82 | 0.93 | 1.00 | 1.00 | 1.00 | 0.66 | 0.77 | 0.87 | 0.88 | 1.00 | 0.55 | 0.66 | 0.76 | 0.77 | 0.87 | 0.39 | 0.48 | 0.57 | 0.58 | 0.68 |
| | | PI | 1.62 | 1.62 | 1.62 | 1.62 | 1.62 | 1.62 | 1.62 | 1.62 | 1.62 | 1.62 | 1.62 | 1.62 | 1.62 | 1.62 | 1.62 | 1.64 | 1.64 | 1.64 | 1.64 | 1.64 |
| | 23°F(-5.0°C) | TC | 25088 | 25195 | 25847 | 25975 | 26831 | 26358 | 26366 | 26369 | 26403 | 26860 | 27267 | 27276 | 27283 | 27284 | 27328 | 28993 | 28984 | 29005 | 29009 | 29025 |
| | | S/T | 0.83 | 0.95 | 1.00 | 1.00 | 1.00 | 0.66 | 0.78 | 0.88 | 0.89 | 1.00 | 0.56 | 0.67 | 0.76 | 0.78 | 0.89 | 0.39 | 0.48 | 0.57 | 0.59 | 0.69 |
| | | PI | 1.61 | 1.61 | 1.61 | 1.61 | 1.62 | 1.62 | 1.62 | 1.62 | 1.62 | 1.62 | 1.63 | 1.63 | 1.63 | 1.63 | 1.63 | 1.66 | 1.66 | 1.66 | 1.66 | 1.66 |
| | 35°F(1.7°C) | TC | 23441 | 23441 | 23579 | 23645 | 24408 | 24536 | 24535 | 24538 | 24538 | 24603 | 25304 | 25303 | 25304 | 25305 | 25307 | 26729 | 26723 | 26722 | 26721 | 26723 |
| | | S/T | 0.78 | 0.88 | 0.97 | 0.99 | 1.00 | 0.63 | 0.73 | 0.82 | 0.83 | 0.93 | 0.54 | 0.63 | 0.72 | 0.73 | 0.83 | 0.39 | 0.46 | 0.54 | 0.56 | 0.65 |
| | | PI | 1.48 | 1.48 | 1.49 | 1.50 | 1.56 | 1.57 | 1.57 | 1.57 | 1.57 | 1.58 | 1.64 | 1.64 | 1.64 | 1.64 | 1.64 | 1.78 | 1.78 | 1.78 | 1.78 | 1.78 |
| | 41°F(5.0°C) | TC | 22484 | 22484 | 22663 | 22821 | 23495 | 23530 | 23529 | 23530 | 23530 | 23613 | 24264 | 24262 | 24263 | 24264 | 24265 | 25625 | 25619 | 25617 | 25616 | 25619 |
| | | S/T | 0.78 | 0.89 | 0.98 | 1.00 | 1.00 | 0.64 | 0.74 | 0.83 | 0.84 | 0.94 | 0.54 | 0.64 | 0.72 | 0.74 | 0.84 | 0.39 | 0.47 | 0.55 | 0.56 | 0.66 |
| | | PI | 1.35 | 1.35 | 1.37 | 1.38 | 1.44 | 1.44 | 1.44 | 1.44 | 1.44 | 1.45 | 1.50 | 1.50 | 1.50 | 1.50 | 1.50 | 1.64 | 1.64 | 1.64 | 1.64 | 1.64 |
| | 47°F(8.3°C) | TC | 21526 | 21540 | 21829 | 21926 | 22575 | 22524 | 22523 | 22524 | 22523 | 22628 | 23223 | 23221 | 23223 | 23222 | 23222 | 24523 | 24517 | 24515 | 24514 | 24517 |
| | | S/T | 0.79 | 0.90 | 1.00 | 1.00 | 1.00 | 0.64 | 0.75 | 0.84 | 0.85 | 0.96 | 0.54 | 0.65 | 0.73 | 0.75 | 0.85 | 0.39 | 0.47 | 0.55 | 0.57 | 0.67 |
| | | PI | 1.23 | 1.23 | 1.25 | 1.26 | 1.31 | 1.31 | 1.31 | 1.31 | 1.31 | 1.32 | 1.37 | 1.37 | 1.37 | 1.37 | 1.37 | 1.49 | 1.49 | 1.49 | 1.49 | 1.49 |
| | 50°F(10.0°C) | TC | 21155 | 21737 | 22471 | 22601 | 23477 | 22349 | 22361 | 22516 | 22587 | 23499 | 23221 | 23251 | 23263 | 23265 | 23488 | 24821 | 24887 | 24951 | 24958 | 24990 |
| | | S/T | 0.90 | 1.00 | 1.00 | 1.00 | 1.00 | 0.71 | 0.85 | 0.96 | 0.99 | 1.00 | 0.59 | 0.72 | 0.83 | 0.85 | 0.99 | 0.40 | 0.50 | 0.60 | 0.62 | 0.74 |
| | | PI | 1.40 | 1.40 | 1.40 | 1.40 | 1.40 | 1.40 | 1.40 | 1.40 | 1.40 | 1.40 | 1.40 | 1.40 | 1.40 | 1.40 | 1.40 | 1.40 | 1.40 | 1.40 | 1.40 | 1.40 |
| | 59°F(15.0°C) | TC | 21197 | 21941 | 22719 | 22858 | 23788 | 22427 | 22458 | 22713 | 22882 | 23811 | 23353 | 23376 | 23384 | 23418 | 23831 | 25076 | 25126 | 25176 | 25182 | 25203 |
| | | S/T | 0.92 | 1.00 | 1.00 | 1.00 | 1.00 | 0.73 | 0.86 | 1.00 | 1.00 | 1.00 | 0.60 | 0.73 | 0.85 | 0.86 | 1.00 | 0.40 | 0.51 | 0.61 | 0.63 | 0.76 |
| | | PI | 1.50 | 1.50 | 1.51 | 1.51 | 1.51 | 1.51 | 1.51 | 1.51 | 1.51 | 1.51 | 1.51 | 1.51 | 1.51 | 1.51 | 1.51 | 1.52 | 1.52 | 1.52 | 1.52 | 1.52 |
| | 68°F(20.0°C) | TC | 21229 | 22135 | 22956 | 23102 | 24082 | 22474 | 22525 | 22981 | 23127 | 24106 | 23446 | 23463 | 23505 | 23526 | 24126 | 25263 | 25309 | 25349 | 25353 | 25366 |
| | | S/T | 0.95 | 1.00 | 1.00 | 1.00 | 1.00 | 0.74 | 0.89 | 1.00 | 1.00 | 1.00 | 0.61 | 0.75 | 0.87 | 0.89 | 1.00 | 0.40 | 0.51 | 0.63 | 0.65 | 0.78 |
| | | PI | 1.59 | 1.60 | 1.61 | 1.61 | 1.62 | 1.61 | 1.61 | 1.61 | 1.61 | 1.62 | 1.62 | 1.62 | 1.62 | 1.62 | 1.62 | 1.64 | 1.64 | 1.64 | 1.64 | 1.64 |
| | 77°F(25.0°C) | TC | 21243 | 22265 | 23137 | 23291 | 24332 | 22520 | 22591 | 23162 | 23317 | 24356 | 23540 | 23566 | 23626 | 23653 | 24377 | 25424 | 25501 | 25560 | 25566 | 25590 |
| | | S/T | 0.97 | 1.00 | 1.00 | 1.00 | 1.00 | 0.75 | 0.90 | 1.00 | 1.00 | 1.00 | 0.61 | 0.76 | 0.88 | 0.90 | 1.00 | 0.40 | 0.52 | 0.63 | 0.65 | 0.79 |
| | | PI | 1.70 | 1.71 | 1.72 | 1.72 | 1.73 | 1.72 | 1.72 | 1.72 | 1.72 | 1.73 | 1.73 | 1.73 | 1.73 | 1.73 | 1.73 | 1.75 | 1.75 | 1.74 | 1.74 | 1.74 |
| | 82°F(27.8°C) | TC | 21306 | 22394 | 23297 | 23455 | 24529 | 22578 | 22665 | 23317 | 23481 | 24555 | 23628 | 23658 | 23731 | 23761 | 24576 | 25547 | 25643 | 25710 | 25717 | 25745 |
| | | S/T | 0.99 | 1.00 | 1.00 | 1.00 | 1.00 | 0.76 | 0.91 | 1.00 | 1.00 | 1.00 | 0.62 | 0.77 | 0.89 | 0.92 | 1.00 | 0.40 | 0.52 | 0.64 | 0.66 | 0.80 |
| | | PI | 1.88 | 1.89 | 1.90 | 1.90 | 1.91 | 1.89 | 1.89 | 1.90 | 1.90 | 1.91 | 1.90 | 1.90 | 1.90 | 1.90 | 1.91 | 1.92 | 1.92 | 1.92 | 1.92 | 1.92 |
| | 86°F(30.0°C) | TC | 21501 | 22574 | 23497 | 23661 | 24763 | 22674 | 22779 | 23523 | 23688 | 24789 | 23749 | 23776 | 23863 | 23898 | 24810 | 25711 | 25810 | 25871 | 25878 | 25902 |
| | | S/T | 1.00 | 1.00 | 1.00 | 1.00 | 1.00 | 0.77 | 0.93 | 1.00 | 1.00 | 1.00 | 0.62 | 0.78 | 0.91 | 0.93 | 1.00 | 0.40 | 0.52 | 0.64 | 0.66 | 0.81 |
| | | PI | 2.16 | 2.17 | 2.18 | 2.19 | 2.20 | 2.18 | 2.18 | 2.18 | 2.19 | 2.20 | 2.19 | 2.19 | 2.19 | 2.19 | 2.20 | 2.22 | 2.21 | 2.21 | 2.21 | 2.21 |
| | 95°F(35.0°C) | TC | 21779 | 21897 | 22605 | 22739 | 23637 | 23147 | 23160 | 23168 | 23195 | 23667 | 24140 | 24145 | 24160 | 24162 | 24202 | 26012 | 26002 | 26008 | 26015 | 26050 |
| | | S/T | 0.83 | 0.95 | 1.00 | 1.00 | 1.00 | 0.66 | 0.78 | 0.88 | 0.89 | 1.00 | 0.56 | 0.67 | 0.76 | 0.78 | 0.88 | 0.39 | 0.48 | 0.57 | 0.58 | 0.68 |
| | | PI | 2.69 | 2.69 | 2.74 | 2.74 | 2.80 | 2.77 | 2.77 | 2.77 | 2.77 | 2.80 | 2.83 | 2.83 | 2.83 | 2.83 | 2.84 | 2.95 | 2.95 | 2.95 | 2.95 | 2.95 |
| | 104°F(40.0°C) | TC | 18600 | 18770 | 19476 | 19594 | 20375 | 19771 | 19782 | 19817 | 19839 | 20400 | 20615 | 20623 | 20634 | 20635 | 20694 | 22220 | 22211 | 22222 | 22229 | 22253 |
| | | S/T | 0.85 | 0.98 | 1.00 | 1.00 | 1.00 | 0.68 | 0.80 | 0.90 | 0.92 | 1.00 | 0.56 | 0.68 | 0.78 | 0.80 | 0.91 | 0.39 | 0.48 | 0.58 | 0.59 | 0.70 |
| | | PI | 2.46 | 2.47 | 2.52 | 2.53 | 2.58 | 2.54 | 2.54 | 2.54 | 2.54 | 2.58 | 2.60 | 2.60 | 2.59 | 2.60 | 2.60 | 2.70 | 2.70 | 2.70 | 2.70 | 2.70 |
| | 110°F(43.0°C) | TC | 16628 | 17266 | 17925 | 18041 | 18823 | 17703 | 17708 | 17906 | 18062 | 18843 | 18499 | 18514 | 18518 | 18532 | 18859 | 20023 | 20024 | 20056 | 20059 | 20070 |
| | | S/T | 0.92 | 1.00 | 1.00 | 1.00 | 1.00 | 0.72 | 0.87 | 0.99 | 1.00 | 1.00 | 0.60 | 0.73 | 0.85 | 0.86 | 1.00 | 0.40 | 0.51 | 0.61 | 0.63 | 0.76 |
| | | PI | 2.36 | 2.39 | 2.42 | 2.43 | 2.47 | 2.41 | 2.41 | 2.42 | 2.43 | 2.47 | 2.45 | 2.45 | 2.45 | 2.45 | 2.47 | 2.53 | 2.53 | 2.53 | 2.53 | 2.53 |
| | 115°F(46.0°C) | TC | 14530 | 15230 | 15832 | 15950 | 16653 | 15452 | 15483 | 15850 | 15970 | 16670 | 16173 | 16182 | 16204 | 16220 | 16684 | 17536 | 17549 | 17573 | 17576 | 17581 |
| | | S/T | 0.96 | 1.00 | 1.00 | 1.00 | 1.00 | 0.75 | 0.89 | 1.00 | 1.00 | 1.00 | 0.61 | 0.75 | 0.87 | 0.90 | 1.00 | 0.40 | 0.52 | 0.63 | 0.65 | 0.78 |
| | | PI | 2.13 | 2.17 | 2.19 | 2.20 | 2.23 | 2.18 | 2.18 | 2.19 | 2.20 | 2.23 | 2.21 | 2.21 | 2.21 | 2.21 | 2.23 | 2.27 | 2.27 | 2.27 | 2.27 | 2.27 |
| | 122°F(50.0°C) | TC | 11879 | 12534 | 13095 | 13193 | 13859 | 12258 | 12547 | 13110 | 13208 | 13872 | 12908 | 12905 | 13119 | 13218 | 13881 | 14095 | 14150 | 14153 | 14152 | 14170 |
| | | S/T | 1.00 | 1.00 | 1.00 | 1.00 | 1.00 | 0.84 | 1.00 | 1.00 | 1.00 | 1.00 | 0.67 | 0.85 | 1.00 | 1.00 | 1.00 | 0.41 | 0.55 | 0.69 | 0.72 | 0.88 |
| | | PI | 1.85 | 1.87 | 1.88 | 1.89 | 1.90 | 1.86 | 1.87 | 1.88 | 1.89 | 1.90 | 1.88 | 1.88 | 1.88 | 1.89 | 1.90 | 1.92 | 1.92 | 1.91 | 1.91 | 1.91 |

# HEATING PERFORMANCE DATA (HEAT PUMP)

**Table 11 – 9K, 115V Heating Performance**

| AIRFLOW (CFM) | OUTDOOR DB(°F) | HEATING PERFORMANCE AT INDOOR DRY BULB TEMPERATURE | | | | | | | | | |
|---|---|---|---|---|---|---|---|---|---|---|---|
| | | TC: Total Heating Capacity (BTU/hr) | | | | | PI: Power Input (kW) | | | | |
| | | Indoor Conditions(DB °F) | | | | | Indoor Conditions(DB °F) | | | | |
| | | 60.8°F (16.0°C) | 68°F (20.0°C) | 70°F (21.1°C) | 71.6°F (22.0°C) | 75.2°F (24.0°C) | 60.8°F (16.0°C) | 68°F (20.0°C) | 70°F (21.1°C) | 71.6°F (22.0°C) | 75.2°F (24.0°C) |
| 129 | 5°F(-15.0°C) | 27771 | 27216 | 27080 | 25417 | 25188 | 3.82 | 3.85 | 3.86 | 3.87 | 3.88 |
| | 14°F(-10.0°C) | 28343 | 27776 | 27637 | 25940 | 25707 | 3.64 | 3.67 | 3.68 | 3.68 | 3.70 |
| | 17°F(-8.3°C) | 28534 | 27963 | 27823 | 26115 | 25880 | 3.58 | 3.61 | 3.61 | 3.62 | 3.64 |
| | 22°F(-5.6°C) | 28363 | 27796 | 27657 | 25958 | 25725 | 3.45 | 3.47 | 3.48 | 3.49 | 3.50 |
| | 27°F(-2.8°C) | 28192 | 27628 | 27490 | 25802 | 25569 | 3.31 | 3.34 | 3.35 | 3.35 | 3.37 |
| | 32°F(-0.0°C) | 28021 | 27460 | 27323 | 25645 | 25414 | 3.18 | 3.21 | 3.22 | 3.22 | 3.23 |
| | 35°F(1.7°C) | 27918 | 27360 | 27223 | 25551 | 25321 | 3.10 | 3.13 | 3.14 | 3.14 | 3.15 |
| | 37°F(2.8°C) | 31018 | 30397 | 30245 | 28388 | 28133 | 3.21 | 3.23 | 3.24 | 3.25 | 3.26 |
| | 42°F(5.6°C) | 38767 | 37992 | 37802 | 35480 | 35161 | 3.47 | 3.50 | 3.50 | 3.51 | 3.53 |
| | 44.6°F(7.0°C) | 41867 | 41030 | 40824 | 38317 | 37973 | 3.57 | 3.60 | 3.61 | 3.62 | 3.63 |
| | 47°F(8.3°C) | 46517 | 45586 | 45358 | 42573 | 42190 | 3.73 | 3.76 | 3.77 | 3.78 | 3.79 |
| | 52°F(11.1°C) | 45403 | 44495 | 44272 | 41554 | 41180 | 3.49 | 3.52 | 3.52 | 3.53 | 3.55 |
| | 57°F(13.9°C) | 44289 | 43403 | 43186 | 40534 | 40170 | 3.25 | 3.27 | 3.28 | 3.29 | 3.30 |
| | 59°F(15.0°C) | 43844 | 42967 | 42752 | 40127 | 39765 | 3.15 | 3.17 | 3.18 | 3.19 | 3.20 |
| | 62°F(16.7°C) | 43176 | 42312 | 42100 | 39515 | 39159 | 3.00 | 3.03 | 3.03 | 3.04 | 3.05 |
| | 64.4°F(18.0°C) | 42641 | 41788 | 41579 | 39026 | 38675 | 2.89 | 2.91 | 2.92 | 2.92 | 2.93 |
| | 69.8°F(21.0°C) | 45010 | 44110 | 43889 | 41194 | 40823 | 2.62 | 2.65 | 2.65 | 2.66 | 2.67 |
| | 75.2°F(24.0°C) | 40272 | 39467 | 39269 | 36858 | 36526 | 2.36 | 2.38 | 2.39 | 2.39 | 2.40 |
| 171 | 5°F(-15.0°C) | 31627 | 30995 | 30840 | 29818 | 29550 | 4.25 | 4.28 | 4.29 | 4.30 | 4.32 |
| | 14°F(-10.0°C) | 32279 | 31633 | 31475 | 30432 | 30158 | 4.04 | 4.08 | 4.08 | 4.09 | 4.11 |
| | 17°F(-8.3°C) | 32496 | 31846 | 31687 | 30637 | 30361 | 3.98 | 4.01 | 4.02 | 4.02 | 4.04 |
| | 22°F(-5.6°C) | 32301 | 31655 | 31497 | 30453 | 30179 | 3.83 | 3.86 | 3.87 | 3.88 | 3.89 |
| | 27°F(-2.8°C) | 32106 | 31464 | 31307 | 30270 | 29997 | 3.68 | 3.71 | 3.72 | 3.73 | 3.74 |
| | 32°F(-0.0°C) | 31911 | 31273 | 31117 | 30086 | 29815 | 3.54 | 3.57 | 3.57 | 3.58 | 3.59 |
| | 35°F(1.7°C) | 31795 | 31159 | 31003 | 29976 | 29706 | 3.45 | 3.48 | 3.48 | 3.49 | 3.50 |
| | 37°F(2.8°C) | 35325 | 34618 | 34445 | 33304 | 33004 | 3.57 | 3.59 | 3.60 | 3.61 | 3.62 |
| | 42°F(5.6°C) | 44150 | 43267 | 43051 | 41625 | 41250 | 3.86 | 3.89 | 3.89 | 3.90 | 3.92 |
| | 44.6°F(7.0°C) | 47680 | 46727 | 46493 | 44953 | 44548 | 3.97 | 4.00 | 4.01 | 4.02 | 4.04 |
| | 47°F(8.3°C) | 52976 | 51916 | 51657 | 49945 | 49496 | 4.15 | 4.18 | 4.19 | 4.20 | 4.21 |
| | 52°F(11.1°C) | 51707 | 50673 | 50420 | 48749 | 48311 | 3.88 | 3.91 | 3.92 | 3.92 | 3.94 |
| | 57°F(13.9°C) | 50439 | 49430 | 49183 | 47554 | 47126 | 3.61 | 3.64 | 3.64 | 3.65 | 3.67 |
| | 59°F(15.0°C) | 49932 | 48933 | 48688 | 47075 | 46652 | 3.50 | 3.53 | 3.53 | 3.54 | 3.56 |
| | 62°F(16.7°C) | 49171 | 48187 | 47946 | 46358 | 45941 | 3.34 | 3.36 | 3.37 | 3.38 | 3.39 |
| | 64.4°F(18.0°C) | 48562 | 47591 | 47353 | 45784 | 45372 | 3.21 | 3.23 | 3.24 | 3.25 | 3.26 |
| | 69.8°F(21.0°C) | 51260 | 50235 | 49983 | 48327 | 47892 | 2.92 | 2.94 | 2.95 | 2.95 | 2.96 |
| | 75.2°F(24.0°C) | 45864 | 44947 | 44722 | 43240 | 42851 | 2.63 | 2.65 | 2.65 | 2.66 | 2.67 |

**Table 11 – 9K, 115V Heating Performance (Continued)**

| AIRFLOW (CFM) | OUTDOOR DB(°F) | HEATING PERFORMANCE AT INDOOR DRY BULB TEMPERATURE | | | | | | | | | |
|---|---|---|---|---|---|---|---|---|---|---|---|
| | | TC: Total Heating Capacity (BTU/hr) | | | | | PI: Power Input (kW) | | | | |
| | | Indoor Conditions(DB °F) | | | | | Indoor Conditions(DB °F) | | | | |
| | | 60.8°F (16.0°C) | 68°F (20.0°C) | 70°F (21.1°C) | 71.6°F (22.0°C) | 75.2°F (24.0°C) | 60.8°F (16.0°C) | 68°F (20.0°C) | 70°F (21.1°C) | 71.6°F (22.0°C) | 75.2°F (24.0°C) |
| 206 | 5°F(-15.0°C) | 36019 | 35299 | 35122 | 34982 | 34667 | 4.72 | 4.76 | 4.77 | 4.78 | 4.80 |
| | 14°F(-10.0°C) | 36761 | 36026 | 35846 | 35702 | 35381 | 4.49 | 4.53 | 4.54 | 4.55 | 4.57 |
| | 17°F(-8.3°C) | 37008 | 36268 | 36087 | 35942 | 35619 | 4.42 | 4.45 | 4.46 | 4.47 | 4.49 |
| | 22°F(-5.6°C) | 36786 | 36051 | 35870 | 35727 | 35405 | 4.25 | 4.29 | 4.30 | 4.31 | 4.32 |
| | 27°F(-2.8°C) | 36564 | 35833 | 35654 | 35511 | 35192 | 4.09 | 4.13 | 4.13 | 4.14 | 4.16 |
| | 32°F(-0.0°C) | 36343 | 35616 | 35438 | 35296 | 34978 | 3.93 | 3.96 | 3.97 | 3.98 | 3.99 |
| | 35°F(1.7°C) | 36209 | 35485 | 35308 | 35167 | 34850 | 3.83 | 3.86 | 3.87 | 3.88 | 3.89 |
| | 37°F(2.8°C) | 40230 | 39425 | 39228 | 39071 | 38719 | 3.96 | 3.99 | 4.00 | 4.01 | 4.03 |
| | 42°F(5.6°C) | 50281 | 49275 | 49029 | 48833 | 48393 | 4.28 | 4.32 | 4.33 | 4.34 | 4.35 |
| | 44.6°F(7.0°C) | 54301 | 53215 | 52949 | 52737 | 52262 | 4.41 | 4.45 | 4.46 | 4.47 | 4.48 |
| | 47°F(8.3°C) | 60332 | 59125 | 58829 | 58594 | 58067 | 4.61 | 4.64 | 4.65 | 4.66 | 4.68 |
| | 52°F(11.1°C) | 58887 | 57709 | 57421 | 57191 | 56676 | 4.31 | 4.34 | 4.35 | 4.36 | 4.38 |
| | 57°F(13.9°C) | 57443 | 56294 | 56012 | 55788 | 55286 | 4.01 | 4.04 | 4.05 | 4.06 | 4.07 |
| | 59°F(15.0°C) | 56865 | 55728 | 55449 | 55227 | 54730 | 3.89 | 3.92 | 3.93 | 3.93 | 3.95 |
| | 62°F(16.7°C) | 55998 | 54878 | 54604 | 54385 | 53896 | 3.71 | 3.74 | 3.75 | 3.75 | 3.77 |
| | 64.4°F(18.0°C) | 55305 | 54199 | 53928 | 53712 | 53229 | 3.56 | 3.59 | 3.60 | 3.61 | 3.62 |
| | 69.8°F(21.0°C) | 58377 | 57210 | 56924 | 56696 | 56186 | 3.24 | 3.27 | 3.27 | 3.28 | 3.29 |
| | 75.2°F(24.0°C) | 52232 | 51188 | 50932 | 50728 | 50272 | 2.92 | 2.94 | 2.95 | 2.95 | 2.96 |
| 229 | 5°F(-15.0°C) | 6151 | 6028 | 5998 | 5974 | 5921 | 0.98 | 0.98 | 0.99 | 0.99 | 0.99 |
| | 14°F(-10.0°C) | 7073 | 6931 | 6897 | 6869 | 6807 | 1.02 | 1.03 | 1.03 | 1.03 | 1.04 |
| | 17°F(-8.3°C) | 7380 | 7232 | 7196 | 7167 | 7103 | 1.03 | 1.04 | 1.04 | 1.05 | 1.05 |
| | 22°F(-5.6°C) | 7768 | 7613 | 7575 | 7545 | 7477 | 1.05 | 1.06 | 1.06 | 1.06 | 1.06 |
| | 27°F(-2.8°C) | 8157 | 7994 | 7954 | 7922 | 7851 | 1.06 | 1.07 | 1.07 | 1.07 | 1.08 |
| | 32°F(-0.0°C) | 8546 | 8375 | 8333 | 8300 | 8225 | 1.07 | 1.08 | 1.08 | 1.09 | 1.09 |
| | 35°F(1.7°C) | 8779 | 8604 | 8561 | 8526 | 8450 | 1.08 | 1.09 | 1.09 | 1.10 | 1.10 |
| | 37°F(2.8°C) | 9136 | 8953 | 8909 | 8873 | 8793 | 1.09 | 1.10 | 1.10 | 1.11 | 1.11 |
| | 42°F(5.6°C) | 10029 | 9828 | 9779 | 9740 | 9652 | 1.12 | 1.13 | 1.13 | 1.14 | 1.14 |
| | 44.6°F(7.0°C) | 10385 | 10178 | 10127 | 10086 | 9996 | 1.13 | 1.14 | 1.15 | 1.15 | 1.15 |
| | 47°F(8.3°C) | 10921 | 10702 | 10649 | 10606 | 10511 | 1.15 | 1.16 | 1.16 | 1.17 | 1.17 |
| | 52°F(11.1°C) | 10955 | 10736 | 10682 | 10639 | 10544 | 1.08 | 1.08 | 1.09 | 1.09 | 1.09 |
| | 57°F(13.9°C) | 10989 | 10769 | 10716 | 10673 | 10577 | 1.00 | 1.01 | 1.01 | 1.01 | 1.01 |
| | 59°F(15.0°C) | 11003 | 10783 | 10729 | 10686 | 10590 | 0.97 | 0.98 | 0.98 | 0.98 | 0.98 |
| | 62°F(16.7°C) | 11023 | 10803 | 10749 | 10706 | 10610 | 0.92 | 0.93 | 0.93 | 0.93 | 0.94 |
| | 64.4°F(18.0°C) | 11040 | 10819 | 10765 | 10722 | 10625 | 0.89 | 0.89 | 0.89 | 0.90 | 0.90 |
| | 69.8°F(21.0°C) | 10487 | 10277 | 10226 | 10185 | 10093 | 0.80 | 0.81 | 0.81 | 0.81 | 0.82 |
| | 75.2°F(24.0°C) | 9140 | 8957 | 8912 | 8876 | 8797 | 0.72 | 0.72 | 0.73 | 0.73 | 0.73 |

**Table 12 – 12K, 115V Heating Performance**

| AIRFLOW (CFM) | HEATING PERFORMANCE AT INDOOR DRY BULB TEMPERATURE | | | | | | | | | | |
|---|---|---|---|---|---|---|---|---|---|---|---|
| | OUTDOOR DB(°F) | TC: Total Heating Capacity (BTU/hr) | | | | | PI: Power Input (kW) | | | | |
| | | Indoor Conditions(DB °F) | | | | | Indoor Conditions(DB °F) | | | | |
| | | 60.8°F (16.0°C) | 68°F (20.0°C) | 70°F (21.1°C) | 71.6°F (22.0°C) | 75.2°F (24.0°C) | 60.8°F (16.0°C) | 68°F (20.0°C) | 70°F (21.1°C) | 71.6°F (22.0°C) | 75.2°F (24.0°C) |
| 129 | 5°F(-15.0°C) | 27771 | 27216 | 27080 | 25417 | 25188 | 3.82 | 3.85 | 3.86 | 3.87 | 3.88 |
| | 14°F(-10.0°C) | 28343 | 27776 | 27637 | 25940 | 25707 | 3.64 | 3.67 | 3.68 | 3.68 | 3.70 |
| | 17°F(-8.3°C) | 28534 | 27963 | 27823 | 26115 | 25880 | 3.58 | 3.61 | 3.61 | 3.62 | 3.64 |
| | 22°F(-5.6°C) | 28363 | 27796 | 27657 | 25958 | 25725 | 3.45 | 3.47 | 3.48 | 3.49 | 3.50 |
| | 27°F(-2.8°C) | 28192 | 27628 | 27490 | 25802 | 25569 | 3.31 | 3.34 | 3.35 | 3.35 | 3.37 |
| | 32°F(-0.0°C) | 28021 | 27460 | 27323 | 25645 | 25414 | 3.18 | 3.21 | 3.22 | 3.22 | 3.23 |
| | 35°F(1.7°C) | 27918 | 27360 | 27223 | 25551 | 25321 | 3.10 | 3.13 | 3.14 | 3.14 | 3.15 |
| | 37°F(2.8°C) | 31018 | 30397 | 30245 | 28388 | 28133 | 3.21 | 3.23 | 3.24 | 3.25 | 3.26 |
| | 42°F(5.6°C) | 38767 | 37992 | 37802 | 35480 | 35161 | 3.47 | 3.50 | 3.50 | 3.51 | 3.53 |
| | 44.6°F(7.0°C) | 41867 | 41030 | 40824 | 38317 | 37973 | 3.57 | 3.60 | 3.61 | 3.62 | 3.63 |
| | 47°F(8.3°C) | 46517 | 45586 | 45358 | 42573 | 42190 | 3.73 | 3.76 | 3.77 | 3.78 | 3.79 |
| | 52°F(11.1°C) | 45403 | 44495 | 44272 | 41554 | 41180 | 3.49 | 3.52 | 3.52 | 3.53 | 3.55 |
| | 57°F(13.9°C) | 44289 | 43403 | 43186 | 40534 | 40170 | 3.25 | 3.27 | 3.28 | 3.29 | 3.30 |
| | 59°F(15.0°C) | 43844 | 42967 | 42752 | 40127 | 39765 | 3.15 | 3.17 | 3.18 | 3.19 | 3.20 |
| | 62°F(16.7°C) | 43176 | 42312 | 42100 | 39515 | 39159 | 3.00 | 3.03 | 3.03 | 3.04 | 3.05 |
| | 64.4°F(18.0°C) | 42641 | 41788 | 41579 | 39026 | 38675 | 2.89 | 2.91 | 2.92 | 2.92 | 2.93 |
| | 69.8°F(21.0°C) | 45010 | 44110 | 43889 | 41194 | 40823 | 2.62 | 2.65 | 2.65 | 2.66 | 2.67 |
| | 75.2°F(24.0°C) | 40272 | 39467 | 39269 | 36858 | 36526 | 2.36 | 2.38 | 2.39 | 2.39 | 2.40 |
| 171 | 5°F(-15.0°C) | 31627 | 30995 | 30840 | 29818 | 29550 | 4.25 | 4.28 | 4.29 | 4.30 | 4.32 |
| | 14°F(-10.0°C) | 32279 | 31633 | 31475 | 30432 | 30158 | 4.04 | 4.08 | 4.08 | 4.09 | 4.11 |
| | 17°F(-8.3°C) | 32496 | 31846 | 31687 | 30637 | 30361 | 3.98 | 4.01 | 4.02 | 4.02 | 4.04 |
| | 22°F(-5.6°C) | 32301 | 31655 | 31497 | 30453 | 30179 | 3.83 | 3.86 | 3.87 | 3.88 | 3.89 |
| | 27°F(-2.8°C) | 32106 | 31464 | 31307 | 30270 | 29997 | 3.68 | 3.71 | 3.72 | 3.73 | 3.74 |
| | 32°F(-0.0°C) | 31911 | 31273 | 31117 | 30086 | 29815 | 3.54 | 3.57 | 3.57 | 3.58 | 3.59 |
| | 35°F(1.7°C) | 31795 | 31159 | 31003 | 29976 | 29706 | 3.45 | 3.48 | 3.48 | 3.49 | 3.50 |
| | 37°F(2.8°C) | 35325 | 34618 | 34445 | 33304 | 33004 | 3.57 | 3.59 | 3.60 | 3.61 | 3.62 |
| | 42°F(5.6°C) | 44150 | 43267 | 43051 | 41625 | 41250 | 3.86 | 3.89 | 3.89 | 3.90 | 3.92 |
| | 44.6°F(7.0°C) | 47680 | 46727 | 46493 | 44953 | 44548 | 3.97 | 4.00 | 4.01 | 4.02 | 4.04 |
| | 47°F(8.3°C) | 52976 | 51916 | 51657 | 49945 | 49496 | 4.15 | 4.18 | 4.19 | 4.20 | 4.21 |
| | 52°F(11.1°C) | 51707 | 50673 | 50420 | 48749 | 48311 | 3.88 | 3.91 | 3.92 | 3.92 | 3.94 |
| | 57°F(13.9°C) | 50439 | 49430 | 49183 | 47554 | 47126 | 3.61 | 3.64 | 3.64 | 3.65 | 3.67 |
| | 59°F(15.0°C) | 49932 | 48933 | 48688 | 47075 | 46652 | 3.50 | 3.53 | 3.53 | 3.54 | 3.56 |
| | 62°F(16.7°C) | 49171 | 48187 | 47946 | 46358 | 45941 | 3.34 | 3.36 | 3.37 | 3.38 | 3.39 |
| | 64.4°F(18.0°C) | 48562 | 47591 | 47353 | 45784 | 45372 | 3.21 | 3.23 | 3.24 | 3.25 | 3.26 |
| | 69.8°F(21.0°C) | 51260 | 50235 | 49983 | 48327 | 47892 | 2.92 | 2.94 | 2.95 | 2.95 | 2.96 |
| | 75.2°F(24.0°C) | 45864 | 44947 | 44722 | 43240 | 42851 | 2.63 | 2.65 | 2.65 | 2.66 | 2.67 |

**Table 12 – 12K, 115V Heating Performance (Continued)**

| AIRFLOW (CFM) | HEATING PERFORMANCE AT INDOOR DRY BULB TEMPERATURE | | | | | | | | | | |
|---|---|---|---|---|---|---|---|---|---|---|---|
| | OUTDOOR DB(°F) | TC: Total Heating Capacity (BTU/hr) | | | | | PI: Power Input (kW) | | | | |
| | | Indoor Conditions(DB °F) | | | | | Indoor Conditions(DB °F) | | | | |
| | | 60.8°F (16.0°C) | 68°F (20.0°C) | 70°F (21.1°C) | 71.6°F (22.0°C) | 75.2°F (24.0°C) | 60.8°F (16.0°C) | 68°F (20.0°C) | 70°F (21.1°C) | 71.6°F (22.0°C) | 75.2°F (24.0°C) |
| 294 | 5°F(-15.0°C) | 36019 | 35299 | 35122 | 34982 | 34667 | 4.72 | 4.76 | 4.77 | 4.78 | 4.80 |
| | 14°F(-10.0°C) | 36761 | 36026 | 35846 | 35702 | 35381 | 4.49 | 4.53 | 4.54 | 4.55 | 4.57 |
| | 17°F(-8.3°C) | 37008 | 36268 | 36087 | 35942 | 35619 | 4.42 | 4.45 | 4.46 | 4.47 | 4.49 |
| | 22°F(-5.6°C) | 36786 | 36051 | 35870 | 35727 | 35405 | 4.25 | 4.29 | 4.30 | 4.31 | 4.32 |
| | 27°F(-2.8°C) | 36564 | 35833 | 35654 | 35511 | 35192 | 4.09 | 4.13 | 4.13 | 4.14 | 4.16 |
| | 32°F(-0.0°C) | 36343 | 35616 | 35438 | 35296 | 34978 | 3.93 | 3.96 | 3.97 | 3.98 | 3.99 |
| | 35°F(1.7°C) | 36209 | 35485 | 35308 | 35167 | 34850 | 3.83 | 3.86 | 3.87 | 3.88 | 3.89 |
| | 37°F(2.8°C) | 40230 | 39425 | 39228 | 39071 | 38719 | 3.96 | 3.99 | 4.00 | 4.01 | 4.03 |
| | 42°F(5.6°C) | 50281 | 49275 | 49029 | 48833 | 48393 | 4.28 | 4.32 | 4.33 | 4.34 | 4.35 |
| | 44.6°F(7.0°C) | 54301 | 53215 | 52949 | 52737 | 52262 | 4.41 | 4.45 | 4.46 | 4.47 | 4.48 |
| | 47°F(8.3°C) | 60332 | 59125 | 58829 | 58594 | 58067 | 4.61 | 4.64 | 4.65 | 4.66 | 4.68 |
| | 52°F(11.1°C) | 58887 | 57709 | 57421 | 57191 | 56676 | 4.31 | 4.34 | 4.35 | 4.36 | 4.38 |
| | 57°F(13.9°C) | 57443 | 56294 | 56012 | 55788 | 55286 | 4.01 | 4.04 | 4.05 | 4.06 | 4.07 |
| | 59°F(15.0°C) | 56865 | 55728 | 55449 | 55227 | 54730 | 3.89 | 3.92 | 3.93 | 3.93 | 3.95 |
| | 62°F(16.7°C) | 55998 | 54878 | 54604 | 54385 | 53896 | 3.71 | 3.74 | 3.75 | 3.75 | 3.77 |
| | 64.4°F(18.0°C) | 55305 | 54199 | 53928 | 53712 | 53229 | 3.56 | 3.59 | 3.60 | 3.61 | 3.62 |
| | 69.8°F(21.0°C) | 58377 | 57210 | 56924 | 56696 | 56186 | 3.24 | 3.27 | 3.27 | 3.28 | 3.29 |
| | 75.2°F(24.0°C) | 52232 | 51188 | 50932 | 50728 | 50272 | 2.92 | 2.94 | 2.95 | 2.95 | 2.96 |
| 312 | 5°F(-15.0°C) | 6848 | 6711 | 6677 | 6651 | 6591 | 0.84 | 0.85 | 0.85 | 0.85 | 0.86 |
| | 14°F(-10.0°C) | 7900 | 7742 | 7703 | 7673 | 7604 | 0.94 | 0.94 | 0.95 | 0.95 | 0.95 |
| | 17°F(-8.3°C) | 8251 | 8086 | 8045 | 8013 | 7941 | 0.97 | 0.97 | 0.98 | 0.98 | 0.98 |
| | 22°F(-5.6°C) | 9075 | 8894 | 8849 | 8814 | 8734 | 1.02 | 1.03 | 1.03 | 1.03 | 1.03 |
| | 27°F(-2.8°C) | 9899 | 9701 | 9653 | 9614 | 9528 | 1.07 | 1.08 | 1.08 | 1.08 | 1.09 |
| | 32°F(-0.0°C) | 10724 | 10509 | 10457 | 10415 | 10321 | 1.12 | 1.13 | 1.13 | 1.14 | 1.14 |
| | 35°F(1.7°C) | 11218 | 10994 | 10939 | 10895 | 10797 | 1.15 | 1.16 | 1.17 | 1.17 | 1.17 |
| | 37°F(2.8°C) | 11698 | 11464 | 11406 | 11361 | 11258 | 1.17 | 1.18 | 1.18 | 1.18 | 1.19 |
| | 42°F(5.6°C) | 12896 | 12638 | 12575 | 12525 | 12412 | 1.21 | 1.22 | 1.22 | 1.22 | 1.22 |
| | 44.6°F(7.0°C) | 13375 | 13108 | 13042 | 12990 | 12873 | 1.22 | 1.23 | 1.23 | 1.23 | 1.24 |
| | 47°F(8.3°C) | 14094 | 13813 | 13744 | 13689 | 13565 | 1.24 | 1.25 | 1.26 | 1.26 | 1.26 |
| | 52°F(11.1°C) | 13697 | 13423 | 13356 | 13303 | 13183 | 1.14 | 1.15 | 1.15 | 1.15 | 1.16 |
| | 57°F(13.9°C) | 13300 | 13034 | 12969 | 12917 | 12801 | 1.04 | 1.05 | 1.05 | 1.05 | 1.06 |
| | 59°F(15.0°C) | 13141 | 12878 | 12814 | 12763 | 12648 | 1.00 | 1.01 | 1.01 | 1.01 | 1.01 |
| | 62°F(16.7°C) | 12903 | 12645 | 12582 | 12531 | 12419 | 0.94 | 0.94 | 0.95 | 0.95 | 0.95 |
| | 64.4°F(18.0°C) | 12712 | 12458 | 12396 | 12346 | 12235 | 0.89 | 0.90 | 0.90 | 0.90 | 0.90 |
| | 69.8°F(21.0°C) | 13153 | 12890 | 12826 | 12774 | 12659 | 0.78 | 0.78 | 0.79 | 0.79 | 0.79 |
| | 75.2°F(24.0°C) | 10008 | 9807 | 9758 | 9719 | 9632 | 0.67 | 0.67 | 0.67 | 0.68 | 0.68 |

**Table 13 – 9K Heating Performance**

| AIRFLOW (CFM) | HEATING PERFORMANCE AT INDOOR DRY BULB TEMPERATURE | | | | | | | | | | |
|---|---|---|---|---|---|---|---|---|---|---|---|
| | OUTDOOR DB(°F) | TC: Total Heating Capacity (BTU/hr) | | | | | PI: Power Input (kW) | | | | |
| | | Indoor Conditions(DB °F) | | | | | Indoor Conditions(DB °F) | | | | |
| | | 60.8°F (16.0°C) | 68°F (20.0°C) | 70°F (21.1°C) | 71.6°F (22.0°C) | 75.2°F (24.0°C) | 60.8°F (16.0°C) | 68°F (20.0°C) | 70°F (21.1°C) | 71.6°F (22.0°C) | 75.2°F (24.0°C) |
| 176 | 5°F(-15.0°C) | 27771 | 27216 | 27080 | 25417 | 25188 | 3.82 | 3.85 | 3.86 | 3.87 | 3.88 |
| | 14°F(-10.0°C) | 28343 | 27776 | 27637 | 25940 | 25707 | 3.64 | 3.67 | 3.68 | 3.68 | 3.70 |
| | 17°F(-8.3°C) | 28534 | 27963 | 27823 | 26115 | 25880 | 3.58 | 3.61 | 3.61 | 3.62 | 3.64 |
| | 22°F(-5.6°C) | 28363 | 27796 | 27657 | 25958 | 25725 | 3.45 | 3.47 | 3.48 | 3.49 | 3.50 |
| | 27°F(-2.8°C) | 28192 | 27628 | 27490 | 25802 | 25569 | 3.31 | 3.34 | 3.35 | 3.35 | 3.37 |
| | 32°F(-0.0°C) | 28021 | 27460 | 27323 | 25645 | 25414 | 3.18 | 3.21 | 3.22 | 3.22 | 3.23 |
| | 35°F(1.7°C) | 27918 | 27360 | 27223 | 25551 | 25321 | 3.10 | 3.13 | 3.14 | 3.14 | 3.15 |
| | 37°F(2.8°C) | 31018 | 30397 | 30245 | 28388 | 28133 | 3.21 | 3.23 | 3.24 | 3.25 | 3.26 |
| | 42°F(5.6°C) | 38767 | 37992 | 37802 | 35480 | 35161 | 3.47 | 3.50 | 3.50 | 3.51 | 3.53 |
| | 44.6°F(7.0°C) | 41867 | 41030 | 40824 | 38317 | 37973 | 3.57 | 3.60 | 3.61 | 3.62 | 3.63 |
| | 47°F(8.3°C) | 46517 | 45586 | 45358 | 42573 | 42190 | 3.73 | 3.76 | 3.77 | 3.78 | 3.79 |
| | 52°F(11.1°C) | 45403 | 44495 | 44272 | 41554 | 41180 | 3.49 | 3.52 | 3.52 | 3.53 | 3.55 |
| | 57°F(13.9°C) | 44289 | 43403 | 43186 | 40534 | 40170 | 3.25 | 3.27 | 3.28 | 3.29 | 3.30 |
| | 59°F(15.0°C) | 43844 | 42967 | 42752 | 40127 | 39765 | 3.15 | 3.17 | 3.18 | 3.19 | 3.20 |
| | 62°F(16.7°C) | 43176 | 42312 | 42100 | 39515 | 39159 | 3.00 | 3.03 | 3.03 | 3.04 | 3.05 |
| | 64.4°F(18.0°C) | 42641 | 41788 | 41579 | 39026 | 38675 | 2.89 | 2.91 | 2.92 | 2.92 | 2.93 |
| | 69.8°F(21.0°C) | 45010 | 44110 | 43889 | 41194 | 40823 | 2.62 | 2.65 | 2.65 | 2.66 | 2.67 |
| | 75.2°F(24.0°C) | 40272 | 39467 | 39269 | 36858 | 36526 | 2.36 | 2.38 | 2.39 | 2.39 | 2.40 |
| 241 | 5°F(-15.0°C) | 31627 | 30995 | 30840 | 29818 | 29550 | 4.25 | 4.28 | 4.29 | 4.30 | 4.32 |
| | 14°F(-10.0°C) | 32279 | 31633 | 31475 | 30432 | 30158 | 4.04 | 4.08 | 4.08 | 4.09 | 4.11 |
| | 17°F(-8.3°C) | 32496 | 31846 | 31687 | 30637 | 30361 | 3.98 | 4.01 | 4.02 | 4.02 | 4.04 |
| | 22°F(-5.6°C) | 32301 | 31655 | 31497 | 30453 | 30179 | 3.83 | 3.86 | 3.87 | 3.88 | 3.89 |
| | 27°F(-2.8°C) | 32106 | 31464 | 31307 | 30270 | 29997 | 3.68 | 3.71 | 3.72 | 3.73 | 3.74 |
| | 32°F(-0.0°C) | 31911 | 31273 | 31117 | 30086 | 29815 | 3.54 | 3.57 | 3.57 | 3.58 | 3.59 |
| | 35°F(1.7°C) | 31795 | 31159 | 31003 | 29976 | 29706 | 3.45 | 3.48 | 3.48 | 3.49 | 3.50 |
| | 37°F(2.8°C) | 35325 | 34618 | 34445 | 33304 | 33004 | 3.57 | 3.59 | 3.60 | 3.61 | 3.62 |
| | 42°F(5.6°C) | 44150 | 43267 | 43051 | 41625 | 41250 | 3.86 | 3.89 | 3.89 | 3.90 | 3.92 |
| | 44.6°F(7.0°C) | 47680 | 46727 | 46493 | 44953 | 44548 | 3.97 | 4.00 | 4.01 | 4.02 | 4.04 |
| | 47°F(8.3°C) | 52976 | 51916 | 51657 | 49945 | 49496 | 4.15 | 4.18 | 4.19 | 4.20 | 4.21 |
| | 52°F(11.1°C) | 51707 | 50673 | 50420 | 48749 | 48311 | 3.88 | 3.91 | 3.92 | 3.92 | 3.94 |
| | 57°F(13.9°C) | 50439 | 49430 | 49183 | 47554 | 47126 | 3.61 | 3.64 | 3.64 | 3.65 | 3.67 |
| | 59°F(15.0°C) | 49932 | 48933 | 48688 | 47075 | 46652 | 3.50 | 3.53 | 3.53 | 3.54 | 3.56 |
| | 62°F(16.7°C) | 49171 | 48187 | 47946 | 46358 | 45941 | 3.34 | 3.36 | 3.37 | 3.38 | 3.39 |
| | 64.4°F(18.0°C) | 48562 | 47591 | 47353 | 45784 | 45372 | 3.21 | 3.23 | 3.24 | 3.25 | 3.26 |
| | 69.8°F(21.0°C) | 51260 | 50235 | 49983 | 48327 | 47892 | 2.92 | 2.94 | 2.95 | 2.95 | 2.96 |
| | 75.2°F(24.0°C) | 45864 | 44947 | 44722 | 43240 | 42851 | 2.63 | 2.65 | 2.65 | 2.66 | 2.67 |

**Table 13 – 9K Heating Performance (Continued)**

| AIRFLOW (CFM) | HEATING PERFORMANCE AT INDOOR DRY BULB TEMPERATURE | | | | | | | | | | |
|---|---|---|---|---|---|---|---|---|---|---|---|
| | OUTDOOR DB(°F) | TC: Total Heating Capacity (BTU/hr) | | | | | PI: Power Input (kW) | | | | |
| | | Indoor Conditions(DB °F) | | | | | Indoor Conditions(DB °F) | | | | |
| | | 60.8°F (16.0°C) | 68°F (20.0°C) | 70°F (21.1°C) | 71.6°F (22.0°C) | 75.2°F (24.0°C) | 60.8°F (16.0°C) | 68°F (20.0°C) | 70°F (21.1°C) | 71.6°F (22.0°C) | 75.2°F (24.0°C) |
| 294 | 5°F(-15.0°C) | 36019 | 35299 | 35122 | 34982 | 34667 | 4.72 | 4.76 | 4.77 | 4.78 | 4.80 |
| | 14°F(-10.0°C) | 36761 | 36026 | 35846 | 35702 | 35381 | 4.49 | 4.53 | 4.54 | 4.55 | 4.57 |
| | 17°F(-8.3°C) | 37008 | 36268 | 36087 | 35942 | 35619 | 4.42 | 4.45 | 4.46 | 4.47 | 4.49 |
| | 22°F(-5.6°C) | 36786 | 36051 | 35870 | 35727 | 35405 | 4.25 | 4.29 | 4.30 | 4.31 | 4.32 |
| | 27°F(-2.8°C) | 36564 | 35833 | 35654 | 35511 | 35192 | 4.09 | 4.13 | 4.13 | 4.14 | 4.16 |
| | 32°F(-0.0°C) | 36343 | 35616 | 35438 | 35296 | 34978 | 3.93 | 3.96 | 3.97 | 3.98 | 3.99 |
| | 35°F(1.7°C) | 36209 | 35485 | 35308 | 35167 | 34850 | 3.83 | 3.86 | 3.87 | 3.88 | 3.89 |
| | 37°F(2.8°C) | 40230 | 39425 | 39228 | 39071 | 38719 | 3.96 | 3.99 | 4.00 | 4.01 | 4.03 |
| | 42°F(5.6°C) | 50281 | 49275 | 49029 | 48833 | 48393 | 4.28 | 4.32 | 4.33 | 4.34 | 4.35 |
| | 44.6°F(7.0°C) | 54301 | 53215 | 52949 | 52737 | 52262 | 4.41 | 4.45 | 4.46 | 4.47 | 4.48 |
| | 47°F(8.3°C) | 60332 | 59125 | 58829 | 58594 | 58067 | 4.61 | 4.64 | 4.65 | 4.66 | 4.68 |
| | 52°F(11.1°C) | 58887 | 57709 | 57421 | 57191 | 56676 | 4.31 | 4.34 | 4.35 | 4.36 | 4.38 |
| | 57°F(13.9°C) | 57443 | 56294 | 56012 | 55788 | 55286 | 4.01 | 4.04 | 4.05 | 4.06 | 4.07 |
| | 59°F(15.0°C) | 56865 | 55728 | 55449 | 55227 | 54730 | 3.89 | 3.92 | 3.93 | 3.93 | 3.95 |
| | 62°F(16.7°C) | 55998 | 54878 | 54604 | 54385 | 53896 | 3.71 | 3.74 | 3.75 | 3.75 | 3.77 |
| | 64.4°F(18.0°C) | 55305 | 54199 | 53928 | 53712 | 53229 | 3.56 | 3.59 | 3.60 | 3.61 | 3.62 |
| | 69.8°F(21.0°C) | 58377 | 57210 | 56924 | 56696 | 56186 | 3.24 | 3.27 | 3.27 | 3.28 | 3.29 |
| | 75.2°F(24.0°C) | 52232 | 51188 | 50932 | 50728 | 50272 | 2.92 | 2.94 | 2.95 | 2.95 | 2.96 |
| 312 | 5°F(-15.0°C) | 7079 | 6937 | 6902 | 6875 | 6813 | 0.91 | 0.92 | 0.92 | 0.92 | 0.93 |
| | 14°F(-10.0°C) | 8128 | 7966 | 7926 | 7894 | 7823 | 0.98 | 0.98 | 0.99 | 0.99 | 0.99 |
| | 17°F(-8.3°C) | 8478 | 8309 | 8267 | 8234 | 8160 | 1.00 | 1.01 | 1.01 | 1.01 | 1.02 |
| | 22°F(-5.6°C) | 8728 | 8554 | 8511 | 8477 | 8401 | 1.01 | 1.01 | 1.02 | 1.02 | 1.02 |
| | 27°F(-2.8°C) | 8978 | 8798 | 8754 | 8719 | 8641 | 1.01 | 1.02 | 1.02 | 1.02 | 1.03 |
| | 32°F(-0.0°C) | 9228 | 9043 | 8998 | 8962 | 8881 | 1.02 | 1.03 | 1.03 | 1.03 | 1.03 |
| | 35°F(1.7°C) | 9378 | 9190 | 9144 | 9108 | 9026 | 1.02 | 1.03 | 1.03 | 1.03 | 1.04 |
| | 37°F(2.8°C) | 9930 | 9731 | 9683 | 9644 | 9557 | 1.04 | 1.05 | 1.05 | 1.05 | 1.06 |
| | 42°F(5.6°C) | 11311 | 11084 | 11029 | 10985 | 10886 | 1.09 | 1.10 | 1.10 | 1.11 | 1.11 |
| | 44.6°F(7.0°C) | 11863 | 11626 | 11568 | 11521 | 11418 | 1.11 | 1.12 | 1.13 | 1.13 | 1.13 |
| | 47°F(8.3°C) | 12691 | 12438 | 12375 | 12326 | 12215 | 1.15 | 1.15 | 1.16 | 1.16 | 1.16 |
| | 52°F(11.1°C) | 12811 | 12555 | 12492 | 12442 | 12330 | 1.08 | 1.09 | 1.09 | 1.09 | 1.10 |
| | 57°F(13.9°C) | 12930 | 12672 | 12608 | 12558 | 12445 | 1.02 | 1.02 | 1.03 | 1.03 | 1.03 |
| | 59°F(15.0°C) | 12978 | 12718 | 12655 | 12604 | 12491 | 0.99 | 1.00 | 1.00 | 1.00 | 1.01 |
| | 62°F(16.7°C) | 13050 | 12789 | 12725 | 12674 | 12560 | 0.95 | 0.96 | 0.96 | 0.96 | 0.97 |
| | 64.4°F(18.0°C) | 13107 | 12845 | 12781 | 12729 | 12615 | 0.92 | 0.93 | 0.93 | 0.93 | 0.93 |
| | 69.8°F(21.0°C) | 12128 | 11885 | 11826 | 11779 | 11673 | 0.85 | 0.86 | 0.86 | 0.86 | 0.86 |
| | 75.2°F(24.0°C) | 9917 | 9718 | 9670 | 9631 | 9544 | 0.78 | 0.79 | 0.79 | 0.79 | 0.79 |

**Table 14 – 12K Heating Performance**

| AIRFLOW (CFM) | HEATING PERFORMANCE AT INDOOR DRY BULB TEMPERATURE | | | | | | | | | | |
|---|---|---|---|---|---|---|---|---|---|---|---|
| | OUTDOOR DB(°F) | TC: Total Heating Capacity (BTU/hr) | | | | | PI: Power Input (kW) | | | | |
| | | Indoor Conditions(DB °F) | | | | | Indoor Conditions(DB °F) | | | | |
| | | 60.8°F (16.0°C) | 68°F (20.0°C) | 70°F (21.1°C) | 71.6°F (22.0°C) | 75.2°F (24.0°C) | 60.8°F (16.0°C) | 68°F (20.0°C) | 70°F (21.1°C) | 71.6°F (22.0°C) | 75.2°F (24.0°C) |
| 176 | 5°F(-15.0°C) | 27771 | 27216 | 27080 | 25417 | 25188 | 3.82 | 3.85 | 3.86 | 3.87 | 3.88 |
| | 14°F(-10.0°C) | 28343 | 27776 | 27637 | 25940 | 25707 | 3.64 | 3.67 | 3.68 | 3.68 | 3.70 |
| | 17°F(-8.3°C) | 28534 | 27963 | 27823 | 26115 | 25880 | 3.58 | 3.61 | 3.61 | 3.62 | 3.64 |
| | 22°F(-5.6°C) | 28363 | 27796 | 27657 | 25958 | 25725 | 3.45 | 3.47 | 3.48 | 3.49 | 3.50 |
| | 27°F(-2.8°C) | 28192 | 27628 | 27490 | 25802 | 25569 | 3.31 | 3.34 | 3.35 | 3.35 | 3.37 |
| | 32°F(-0.0°C) | 28021 | 27460 | 27323 | 25645 | 25414 | 3.18 | 3.21 | 3.22 | 3.22 | 3.23 |
| | 35°F(1.7°C) | 27918 | 27360 | 27223 | 25551 | 25321 | 3.10 | 3.13 | 3.14 | 3.14 | 3.15 |
| | 37°F(2.8°C) | 31018 | 30397 | 30245 | 28388 | 28133 | 3.21 | 3.23 | 3.24 | 3.25 | 3.26 |
| | 42°F(5.6°C) | 38767 | 37992 | 37802 | 35480 | 35161 | 3.47 | 3.50 | 3.50 | 3.51 | 3.53 |
| | 44.6°F(7.0°C) | 41867 | 41030 | 40824 | 38317 | 37973 | 3.57 | 3.60 | 3.61 | 3.62 | 3.63 |
| | 47°F(8.3°C) | 46517 | 45586 | 45358 | 42573 | 42190 | 3.73 | 3.76 | 3.77 | 3.78 | 3.79 |
| | 52°F(11.1°C) | 45403 | 44495 | 44272 | 41554 | 41180 | 3.49 | 3.52 | 3.52 | 3.53 | 3.55 |
| | 57°F(13.9°C) | 44289 | 43403 | 43186 | 40534 | 40170 | 3.25 | 3.27 | 3.28 | 3.29 | 3.30 |
| | 59°F(15.0°C) | 43844 | 42967 | 42752 | 40127 | 39765 | 3.15 | 3.17 | 3.18 | 3.19 | 3.20 |
| | 62°F(16.7°C) | 43176 | 42312 | 42100 | 39515 | 39159 | 3.00 | 3.03 | 3.03 | 3.04 | 3.05 |
| | 64.4°F(18.0°C) | 42641 | 41788 | 41579 | 39026 | 38675 | 2.89 | 2.91 | 2.92 | 2.92 | 2.93 |
| | 69.8°F(21.0°C) | 45010 | 44110 | 43889 | 41194 | 40823 | 2.62 | 2.65 | 2.65 | 2.66 | 2.67 |
| | 75.2°F(24.0°C) | 40272 | 39467 | 39269 | 36858 | 36526 | 2.36 | 2.38 | 2.39 | 2.39 | 2.40 |
| 241 | 5°F(-15.0°C) | 31627 | 30995 | 30840 | 29818 | 29550 | 4.25 | 4.28 | 4.29 | 4.30 | 4.32 |
| | 14°F(-10.0°C) | 32279 | 31633 | 31475 | 30432 | 30158 | 4.04 | 4.08 | 4.08 | 4.09 | 4.11 |
| | 17°F(-8.3°C) | 32496 | 31846 | 31687 | 30637 | 30361 | 3.98 | 4.01 | 4.02 | 4.02 | 4.04 |
| | 22°F(-5.6°C) | 32301 | 31655 | 31497 | 30453 | 30179 | 3.83 | 3.86 | 3.87 | 3.88 | 3.89 |
| | 27°F(-2.8°C) | 32106 | 31464 | 31307 | 30270 | 29997 | 3.68 | 3.71 | 3.72 | 3.73 | 3.74 |
| | 32°F(-0.0°C) | 31911 | 31273 | 31117 | 30086 | 29815 | 3.54 | 3.57 | 3.57 | 3.58 | 3.59 |
| | 35°F(1.7°C) | 31795 | 31159 | 31003 | 29976 | 29706 | 3.45 | 3.48 | 3.48 | 3.49 | 3.50 |
| | 37°F(2.8°C) | 35325 | 34618 | 34445 | 33304 | 33004 | 3.57 | 3.59 | 3.60 | 3.61 | 3.62 |
| | 42°F(5.6°C) | 44150 | 43267 | 43051 | 41625 | 41250 | 3.86 | 3.89 | 3.89 | 3.90 | 3.92 |
| | 44.6°F(7.0°C) | 47680 | 46727 | 46493 | 44953 | 44548 | 3.97 | 4.00 | 4.01 | 4.02 | 4.04 |
| | 47°F(8.3°C) | 52976 | 51916 | 51657 | 49945 | 49496 | 4.15 | 4.18 | 4.19 | 4.20 | 4.21 |
| | 52°F(11.1°C) | 51707 | 50673 | 50420 | 48749 | 48311 | 3.88 | 3.91 | 3.92 | 3.92 | 3.94 |
| | 57°F(13.9°C) | 50439 | 49430 | 49183 | 47554 | 47126 | 3.61 | 3.64 | 3.64 | 3.65 | 3.67 |
| | 59°F(15.0°C) | 49932 | 48933 | 48688 | 47075 | 46652 | 3.50 | 3.53 | 3.53 | 3.54 | 3.56 |
| | 62°F(16.7°C) | 49171 | 48187 | 47946 | 46358 | 45941 | 3.34 | 3.36 | 3.37 | 3.38 | 3.39 |
| | 64.4°F(18.0°C) | 48562 | 47591 | 47353 | 45784 | 45372 | 3.21 | 3.23 | 3.24 | 3.25 | 3.26 |
| | 69.8°F(21.0°C) | 51260 | 50235 | 49983 | 48327 | 47892 | 2.92 | 2.94 | 2.95 | 2.95 | 2.96 |
| | 75.2°F(24.0°C) | 45864 | 44947 | 44722 | 43240 | 42851 | 2.63 | 2.65 | 2.65 | 2.66 | 2.67 |

**Table 14 – 12K Heating Performance (Continued)**

| AIRFLOW (CFM) | OUTDOOR DB(°F) | HEATING PERFORMANCE AT INDOOR DRY BULB TEMPERATURE | | | | | | | | | |
|---|---|---|---|---|---|---|---|---|---|---|---|
| | | TC: Total Heating Capacity (BTU/hr) | | | | | PI: Power Input (kW) | | | | |
| | | Indoor Conditions(DB °F) | | | | | Indoor Conditions(DB °F) | | | | |
| | | 60.8°F (16.0°C) | 68°F (20.0°C) | 70°F (21.1°C) | 71.6°F (22.0°C) | 75.2°F (24.0°C) | 60.8°F (16.0°C) | 68°F (20.0°C) | 70°F (21.1°C) | 71.6°F (22.0°C) | 75.2°F (24.0°C) |
| 294 | 5°F(-15.0°C) | 36019 | 35299 | 35122 | 34982 | 34667 | 4.72 | 4.76 | 4.77 | 4.78 | 4.80 |
| | 14°F(-10.0°C) | 36761 | 36026 | 35846 | 35702 | 35381 | 4.49 | 4.53 | 4.54 | 4.55 | 4.57 |
| | 17°F(-8.3°C) | 37008 | 36268 | 36087 | 35942 | 35619 | 4.42 | 4.45 | 4.46 | 4.47 | 4.49 |
| | 22°F(-5.6°C) | 36786 | 36051 | 35870 | 35727 | 35405 | 4.25 | 4.29 | 4.30 | 4.31 | 4.32 |
| | 27°F(-2.8°C) | 36564 | 35833 | 35654 | 35511 | 35192 | 4.09 | 4.13 | 4.13 | 4.14 | 4.16 |
| | 32°F(-0.0°C) | 36343 | 35616 | 35438 | 35296 | 34978 | 3.93 | 3.96 | 3.97 | 3.98 | 3.99 |
| | 35°F(1.7°C) | 36209 | 35485 | 35308 | 35167 | 34850 | 3.83 | 3.86 | 3.87 | 3.88 | 3.89 |
| | 37°F(2.8°C) | 40230 | 39425 | 39228 | 39071 | 38719 | 3.96 | 3.99 | 4.00 | 4.01 | 4.03 |
| | 42°F(5.6°C) | 50281 | 49275 | 49029 | 48833 | 48393 | 4.28 | 4.32 | 4.33 | 4.34 | 4.35 |
| | 44.6°F(7.0°C) | 54301 | 53215 | 52949 | 52737 | 52262 | 4.41 | 4.45 | 4.46 | 4.47 | 4.48 |
| | 47°F(8.3°C) | 60332 | 59125 | 58829 | 58594 | 58067 | 4.61 | 4.64 | 4.65 | 4.66 | 4.68 |
| | 52°F(11.1°C) | 58887 | 57709 | 57421 | 57191 | 56676 | 4.31 | 4.34 | 4.35 | 4.36 | 4.38 |
| | 57°F(13.9°C) | 57443 | 56294 | 56012 | 55788 | 55286 | 4.01 | 4.04 | 4.05 | 4.06 | 4.07 |
| | 59°F(15.0°C) | 56865 | 55728 | 55449 | 55227 | 54730 | 3.89 | 3.92 | 3.93 | 3.93 | 3.95 |
| | 62°F(16.7°C) | 55998 | 54878 | 54604 | 54385 | 53896 | 3.71 | 3.74 | 3.75 | 3.75 | 3.77 |
| | 64.4°F(18.0°C) | 55305 | 54199 | 53928 | 53712 | 53229 | 3.56 | 3.59 | 3.60 | 3.61 | 3.62 |
| | 69.8°F(21.0°C) | 58377 | 57210 | 56924 | 56696 | 56186 | 3.24 | 3.27 | 3.27 | 3.28 | 3.29 |
| | 75.2°F(24.0°C) | 52232 | 51188 | 50932 | 50728 | 50272 | 2.92 | 2.94 | 2.95 | 2.95 | 2.96 |
| 312 | 5°F(-15.0°C) | 7079 | 6937 | 6902 | 6875 | 6813 | 0.91 | 0.92 | 0.92 | 0.92 | 0.93 |
| | 14°F(-10.0°C) | 8128 | 7966 | 7926 | 7894 | 7823 | 0.98 | 0.98 | 0.99 | 0.99 | 0.99 |
| | 17°F(-8.3°C) | 8478 | 8309 | 8267 | 8234 | 8160 | 1.00 | 1.01 | 1.01 | 1.01 | 1.02 |
| | 22°F(-5.6°C) | 8728 | 8554 | 8511 | 8477 | 8401 | 1.01 | 1.01 | 1.02 | 1.02 | 1.02 |
| | 27°F(-2.8°C) | 8978 | 8798 | 8754 | 8719 | 8641 | 1.01 | 1.02 | 1.02 | 1.02 | 1.03 |
| | 32°F(-0.0°C) | 9228 | 9043 | 8998 | 8962 | 8881 | 1.02 | 1.03 | 1.03 | 1.03 | 1.03 |
| | 35°F(1.7°C) | 9378 | 9190 | 9144 | 9108 | 9026 | 1.02 | 1.03 | 1.03 | 1.03 | 1.04 |
| | 37°F(2.8°C) | 9930 | 9731 | 9683 | 9644 | 9557 | 1.04 | 1.05 | 1.05 | 1.05 | 1.06 |
| | 42°F(5.6°C) | 11311 | 11084 | 11029 | 10985 | 10886 | 1.09 | 1.10 | 1.10 | 1.11 | 1.11 |
| | 44.6°F(7.0°C) | 11863 | 11626 | 11568 | 11521 | 11418 | 1.11 | 1.12 | 1.13 | 1.13 | 1.13 |
| | 47°F(8.3°C) | 12691 | 12438 | 12375 | 12326 | 12215 | 1.15 | 1.15 | 1.16 | 1.16 | 1.16 |
| | 52°F(11.1°C) | 12811 | 12555 | 12492 | 12442 | 12330 | 1.08 | 1.09 | 1.09 | 1.09 | 1.10 |
| | 57°F(13.9°C) | 12930 | 12672 | 12608 | 12558 | 12445 | 1.02 | 1.02 | 1.03 | 1.03 | 1.03 |
| | 59°F(15.0°C) | 12978 | 12718 | 12655 | 12604 | 12491 | 0.99 | 1.00 | 1.00 | 1.00 | 1.01 |
| | 62°F(16.7°C) | 13050 | 12789 | 12725 | 12674 | 12560 | 0.95 | 0.96 | 0.96 | 0.96 | 0.97 |
| | 64.4°F(18.0°C) | 13107 | 12845 | 12781 | 12729 | 12615 | 0.92 | 0.93 | 0.93 | 0.93 | 0.93 |
| | 69.8°F(21.0°C) | 11663 | 11429 | 11372 | 11327 | 11225 | 0.85 | 0.86 | 0.86 | 0.86 | 0.86 |
| | 75.2°F(24.0°C) | 9833 | 9636 | 9588 | 9549 | 9463 | 0.78 | 0.79 | 0.79 | 0.79 | 0.79 |

**Table 15 – 18K Heating Performance**

| AIRFLOW (CFM) | HEATING PERFORMANCE AT INDOOR DRY BULB TEMPERATURE | | | | | | | | | | |
|---|---|---|---|---|---|---|---|---|---|---|---|
| | OUTDOOR DB(°F) | TC: Total Heating Capacity (BTU/hr) | | | | | PI: Power Input (kW) | | | | |
| | | Indoor Conditions(DB °F) | | | | | Indoor Conditions(DB °F) | | | | |
| | | 60.8°F (16.0°C) | 68°F (20.0°C) | 70°F (21.1°C) | 71.6°F (22.0°C) | 75.2°F (24.0°C) | 60.8°F (16.0°C) | 68°F (20.0°C) | 70°F (21.1°C) | 71.6°F (22.0°C) | 75.2°F (24.0°C) |
| 265 | 5°F(-15.0°C) | 27771 | 27216 | 27080 | 25417 | 25188 | 3.82 | 3.85 | 3.86 | 3.87 | 3.88 |
| | 14°F(-10.0°C) | 28343 | 27776 | 27637 | 25940 | 25707 | 3.64 | 3.67 | 3.68 | 3.68 | 3.70 |
| | 17°F(-8.3°C) | 28534 | 27963 | 27823 | 26115 | 25880 | 3.58 | 3.61 | 3.61 | 3.62 | 3.64 |
| | 22°F(-5.6°C) | 28363 | 27796 | 27657 | 25958 | 25725 | 3.45 | 3.47 | 3.48 | 3.49 | 3.50 |
| | 27°F(-2.8°C) | 28192 | 27628 | 27490 | 25802 | 25569 | 3.31 | 3.34 | 3.35 | 3.35 | 3.37 |
| | 32°F(-0.0°C) | 28021 | 27460 | 27323 | 25645 | 25414 | 3.18 | 3.21 | 3.22 | 3.22 | 3.23 |
| | 35°F(1.7°C) | 27918 | 27360 | 27223 | 25551 | 25321 | 3.10 | 3.13 | 3.14 | 3.14 | 3.15 |
| | 37°F(2.8°C) | 31018 | 30397 | 30245 | 28388 | 28133 | 3.21 | 3.23 | 3.24 | 3.25 | 3.26 |
| | 42°F(5.6°C) | 38767 | 37992 | 37802 | 35480 | 35161 | 3.47 | 3.50 | 3.50 | 3.51 | 3.53 |
| | 44.6°F(7.0°C) | 41867 | 41030 | 40824 | 38317 | 37973 | 3.57 | 3.60 | 3.61 | 3.62 | 3.63 |
| | 47°F(8.3°C) | 46517 | 45586 | 45358 | 42573 | 42190 | 3.73 | 3.76 | 3.77 | 3.78 | 3.79 |
| | 52°F(11.1°C) | 45403 | 44495 | 44272 | 41554 | 41180 | 3.49 | 3.52 | 3.52 | 3.53 | 3.55 |
| | 57°F(13.9°C) | 44289 | 43403 | 43186 | 40534 | 40170 | 3.25 | 3.27 | 3.28 | 3.29 | 3.30 |
| | 59°F(15.0°C) | 43844 | 42967 | 42752 | 40127 | 39765 | 3.15 | 3.17 | 3.18 | 3.19 | 3.20 |
| | 62°F(16.7°C) | 43176 | 42312 | 42100 | 39515 | 39159 | 3.00 | 3.03 | 3.03 | 3.04 | 3.05 |
| | 64.4°F(18.0°C) | 42641 | 41788 | 41579 | 39026 | 38675 | 2.89 | 2.91 | 2.92 | 2.92 | 2.93 |
| | 69.8°F(21.0°C) | 45010 | 44110 | 43889 | 41194 | 40823 | 2.62 | 2.65 | 2.65 | 2.66 | 2.67 |
| | 75.2°F(24.0°C) | 40272 | 39467 | 39269 | 36858 | 36526 | 2.36 | 2.38 | 2.39 | 2.39 | 2.40 |
| 359 | 5°F(-15.0°C) | 31627 | 30995 | 30840 | 29818 | 29550 | 4.25 | 4.28 | 4.29 | 4.30 | 4.32 |
| | 14°F(-10.0°C) | 32279 | 31633 | 31475 | 30432 | 30158 | 4.04 | 4.08 | 4.08 | 4.09 | 4.11 |
| | 17°F(-8.3°C) | 32496 | 31846 | 31687 | 30637 | 30361 | 3.98 | 4.01 | 4.02 | 4.02 | 4.04 |
| | 22°F(-5.6°C) | 32301 | 31655 | 31497 | 30453 | 30179 | 3.83 | 3.86 | 3.87 | 3.88 | 3.89 |
| | 27°F(-2.8°C) | 32106 | 31464 | 31307 | 30270 | 29997 | 3.68 | 3.71 | 3.72 | 3.73 | 3.74 |
| | 32°F(-0.0°C) | 31911 | 31273 | 31117 | 30086 | 29815 | 3.54 | 3.57 | 3.57 | 3.58 | 3.59 |
| | 35°F(1.7°C) | 31795 | 31159 | 31003 | 29976 | 29706 | 3.45 | 3.48 | 3.48 | 3.49 | 3.50 |
| | 37°F(2.8°C) | 35325 | 34618 | 34445 | 33304 | 33004 | 3.57 | 3.59 | 3.60 | 3.61 | 3.62 |
| | 42°F(5.6°C) | 44150 | 43267 | 43051 | 41625 | 41250 | 3.86 | 3.89 | 3.89 | 3.90 | 3.92 |
| | 44.6°F(7.0°C) | 47680 | 46727 | 46493 | 44953 | 44548 | 3.97 | 4.00 | 4.01 | 4.02 | 4.04 |
| | 47°F(8.3°C) | 52976 | 51916 | 51657 | 49945 | 49496 | 4.15 | 4.18 | 4.19 | 4.20 | 4.21 |
| | 52°F(11.1°C) | 51707 | 50673 | 50420 | 48749 | 48311 | 3.88 | 3.91 | 3.92 | 3.92 | 3.94 |
| | 57°F(13.9°C) | 50439 | 49430 | 49183 | 47554 | 47126 | 3.61 | 3.64 | 3.64 | 3.65 | 3.67 |
| | 59°F(15.0°C) | 49932 | 48933 | 48688 | 47075 | 46652 | 3.50 | 3.53 | 3.53 | 3.54 | 3.56 |
| | 62°F(16.7°C) | 49171 | 48187 | 47946 | 46358 | 45941 | 3.34 | 3.36 | 3.37 | 3.38 | 3.39 |
| | 64.4°F(18.0°C) | 48562 | 47591 | 47353 | 45784 | 45372 | 3.21 | 3.23 | 3.24 | 3.25 | 3.26 |
| | 69.8°F(21.0°C) | 51260 | 50235 | 49983 | 48327 | 47892 | 2.92 | 2.94 | 2.95 | 2.95 | 2.96 |
| | 75.2°F(24.0°C) | 45864 | 44947 | 44722 | 43240 | 42851 | 2.63 | 2.65 | 2.65 | 2.66 | 2.67 |

**Table 15 – 18K Heating Performance (Continued)**

| AIRFLOW (CFM) | HEATING PERFORMANCE AT INDOOR DRY BULB TEMPERATURE | | | | | | | | | | |
|---|---|---|---|---|---|---|---|---|---|---|---|
| | OUTDOOR DB(°F) | TC: Total Heating Capacity (BTU/hr) | | | | | PI: Power Input (kW) | | | | |
| | | Indoor Conditions(DB °F) | | | | | Indoor Conditions(DB °F) | | | | |
| | | 60.8°F (16.0°C) | 68°F (20.0°C) | 70°F (21.1°C) | 71.6°F (22.0°C) | 75.2°F (24.0°C) | 60.8°F (16.0°C) | 68°F (20.0°C) | 70°F (21.1°C) | 71.6°F (22.0°C) | 75.2°F (24.0°C) |
| 447 | 5°F(-15.0°C) | 36019 | 35299 | 35122 | 34982 | 34667 | 4.72 | 4.76 | 4.77 | 4.78 | 4.80 |
| | 14°F(-10.0°C) | 36761 | 36026 | 35846 | 35702 | 35381 | 4.49 | 4.53 | 4.54 | 4.55 | 4.57 |
| | 17°F(-8.3°C) | 37008 | 36268 | 36087 | 35942 | 35619 | 4.42 | 4.45 | 4.46 | 4.47 | 4.49 |
| | 22°F(-5.6°C) | 36786 | 36051 | 35870 | 35727 | 35405 | 4.25 | 4.29 | 4.30 | 4.31 | 4.32 |
| | 27°F(-2.8°C) | 36564 | 35833 | 35654 | 35511 | 35192 | 4.09 | 4.13 | 4.13 | 4.14 | 4.16 |
| | 32°F(-0.0°C) | 36343 | 35616 | 35438 | 35296 | 34978 | 3.93 | 3.96 | 3.97 | 3.98 | 3.99 |
| | 35°F(1.7°C) | 36209 | 35485 | 35308 | 35167 | 34850 | 3.83 | 3.86 | 3.87 | 3.88 | 3.89 |
| | 37°F(2.8°C) | 40230 | 39425 | 39228 | 39071 | 38719 | 3.96 | 3.99 | 4.00 | 4.01 | 4.03 |
| | 42°F(5.6°C) | 50281 | 49275 | 49029 | 48833 | 48393 | 4.28 | 4.32 | 4.33 | 4.34 | 4.35 |
| | 44.6°F(7.0°C) | 54301 | 53215 | 52949 | 52737 | 52262 | 4.41 | 4.45 | 4.46 | 4.47 | 4.48 |
| | 47°F(8.3°C) | 60332 | 59125 | 58829 | 58594 | 58067 | 4.61 | 4.64 | 4.65 | 4.66 | 4.68 |
| | 52°F(11.1°C) | 58887 | 57709 | 57421 | 57191 | 56676 | 4.31 | 4.34 | 4.35 | 4.36 | 4.38 |
| | 57°F(13.9°C) | 57443 | 56294 | 56012 | 55788 | 55286 | 4.01 | 4.04 | 4.05 | 4.06 | 4.07 |
| | 59°F(15.0°C) | 56865 | 55728 | 55449 | 55227 | 54730 | 3.89 | 3.92 | 3.93 | 3.93 | 3.95 |
| | 62°F(16.7°C) | 55998 | 54878 | 54604 | 54385 | 53896 | 3.71 | 3.74 | 3.75 | 3.75 | 3.77 |
| | 64.4°F(18.0°C) | 55305 | 54199 | 53928 | 53712 | 53229 | 3.56 | 3.59 | 3.60 | 3.61 | 3.62 |
| | 69.8°F(21.0°C) | 58377 | 57210 | 56924 | 56696 | 56186 | 3.24 | 3.27 | 3.27 | 3.28 | 3.29 |
| | 75.2°F(24.0°C) | 52232 | 51188 | 50932 | 50728 | 50272 | 2.92 | 2.94 | 2.95 | 2.95 | 2.96 |
| 459 | 5°F(-15.0°C) | 10931 | 10713 | 10659 | 10616 | 10521 | 1.59 | 1.61 | 1.61 | 1.61 | 1.62 |
| | 14°F(-10.0°C) | 11291 | 11065 | 11010 | 10966 | 10867 | 1.50 | 1.51 | 1.51 | 1.51 | 1.52 |
| | 17°F(-8.3°C) | 11411 | 11182 | 11127 | 11082 | 10982 | 1.46 | 1.48 | 1.48 | 1.48 | 1.49 |
| | 22°F(-5.6°C) | 11776 | 11541 | 11483 | 11437 | 11334 | 1.49 | 1.50 | 1.50 | 1.51 | 1.51 |
| | 27°F(-2.8°C) | 12142 | 11899 | 11839 | 11792 | 11686 | 1.51 | 1.53 | 1.53 | 1.53 | 1.54 |
| | 32°F(-0.0°C) | 12507 | 12257 | 12196 | 12147 | 12038 | 1.54 | 1.55 | 1.56 | 1.56 | 1.57 |
| | 35°F(1.7°C) | 12726 | 12472 | 12409 | 12360 | 12249 | 1.56 | 1.57 | 1.57 | 1.57 | 1.58 |
| | 37°F(2.8°C) | 13833 | 13556 | 13488 | 13434 | 13313 | 1.61 | 1.62 | 1.62 | 1.63 | 1.63 |
| | 42°F(5.6°C) | 16598 | 16266 | 16185 | 16120 | 15975 | 1.74 | 1.76 | 1.76 | 1.76 | 1.77 |
| | 44.6°F(7.0°C) | 17705 | 17351 | 17264 | 17195 | 17040 | 1.79 | 1.81 | 1.81 | 1.82 | 1.82 |
| | 47°F(8.3°C) | 19364 | 18977 | 18882 | 18806 | 18637 | 1.87 | 1.89 | 1.89 | 1.90 | 1.90 |
| | 52°F(11.1°C) | 19218 | 18834 | 18739 | 18664 | 18496 | 1.72 | 1.74 | 1.74 | 1.75 | 1.75 |
| | 57°F(13.9°C) | 19072 | 18690 | 18597 | 18522 | 18356 | 1.58 | 1.59 | 1.59 | 1.59 | 1.60 |
| | 59°F(15.0°C) | 19013 | 18633 | 18540 | 18466 | 18299 | 1.52 | 1.53 | 1.53 | 1.53 | 1.54 |
| | 62°F(16.7°C) | 18926 | 18547 | 18454 | 18380 | 18215 | 1.43 | 1.44 | 1.44 | 1.44 | 1.45 |
| | 64.4°F(18.0°C) | 18855 | 18478 | 18386 | 18312 | 18147 | 1.35 | 1.37 | 1.37 | 1.37 | 1.38 |
| | 69.8°F(21.0°C) | 19798 | 19402 | 19305 | 19228 | 19055 | 1.19 | 1.20 | 1.21 | 1.21 | 1.21 |
| | 75.2°F(24.0°C) | 16442 | 16114 | 16033 | 15969 | 15825 | 1.03 | 1.04 | 1.04 | 1.04 | 1.05 |

**Table 16 – 24K Heating Performance**

| AIRFLOW (CFM) | HEATING PERFORMANCE AT INDOOR DRY BULB TEMPERATURE | | | | | | | | | | |
|---|---|---|---|---|---|---|---|---|---|---|---|
| | OUTDOOR DB(°F) | TC: Total Heating Capacity (BTU/hr) | | | | | PI: Power Input (kW) | | | | |
| | | Indoor Conditions(DB °F) | | | | | Indoor Conditions(DB °F) | | | | |
| | | 60.8°F (16.0°C) | 68°F (20.0°C) | 70°F (21.1°C) | 71.6°F (22.0°C) | 75.2°F (24.0°C) | 60.8°F (16.0°C) | 68°F (20.0°C) | 70°F (21.1°C) | 71.6°F (22.0°C) | 75.2°F (24.0°C) |
| 265 | 5°F(-15.0°C) | 27771 | 27216 | 27080 | 25417 | 25188 | 3.82 | 3.85 | 3.86 | 3.87 | 3.88 |
| | 14°F(-10.0°C) | 28343 | 27776 | 27637 | 25940 | 25707 | 3.64 | 3.67 | 3.68 | 3.68 | 3.70 |
| | 17°F(-8.3°C) | 28534 | 27963 | 27823 | 26115 | 25880 | 3.58 | 3.61 | 3.61 | 3.62 | 3.64 |
| | 22°F(-5.6°C) | 28363 | 27796 | 27657 | 25958 | 25725 | 3.45 | 3.47 | 3.48 | 3.49 | 3.50 |
| | 27°F(-2.8°C) | 28192 | 27628 | 27490 | 25802 | 25569 | 3.31 | 3.34 | 3.35 | 3.35 | 3.37 |
| | 32°F(-0.0°C) | 28021 | 27460 | 27323 | 25645 | 25414 | 3.18 | 3.21 | 3.22 | 3.22 | 3.23 |
| | 35°F(1.7°C) | 27918 | 27360 | 27223 | 25551 | 25321 | 3.10 | 3.13 | 3.14 | 3.14 | 3.15 |
| | 37°F(2.8°C) | 31018 | 30397 | 30245 | 28388 | 28133 | 3.21 | 3.23 | 3.24 | 3.25 | 3.26 |
| | 42°F(5.6°C) | 38767 | 37992 | 37802 | 35480 | 35161 | 3.47 | 3.50 | 3.50 | 3.51 | 3.53 |
| | 44.6°F(7.0°C) | 41867 | 41030 | 40824 | 38317 | 37973 | 3.57 | 3.60 | 3.61 | 3.62 | 3.63 |
| | 47°F(8.3°C) | 46517 | 45586 | 45358 | 42573 | 42190 | 3.73 | 3.76 | 3.77 | 3.78 | 3.79 |
| | 52°F(11.1°C) | 45403 | 44495 | 44272 | 41554 | 41180 | 3.49 | 3.52 | 3.52 | 3.53 | 3.55 |
| | 57°F(13.9°C) | 44289 | 43403 | 43186 | 40534 | 40170 | 3.25 | 3.27 | 3.28 | 3.29 | 3.30 |
| | 59°F(15.0°C) | 43844 | 42967 | 42752 | 40127 | 39765 | 3.15 | 3.17 | 3.18 | 3.19 | 3.20 |
| | 62°F(16.7°C) | 43176 | 42312 | 42100 | 39515 | 39159 | 3.00 | 3.03 | 3.03 | 3.04 | 3.05 |
| | 64.4°F(18.0°C) | 42641 | 41788 | 41579 | 39026 | 38675 | 2.89 | 2.91 | 2.92 | 2.92 | 2.93 |
| | 69.8°F(21.0°C) | 45010 | 44110 | 43889 | 41194 | 40823 | 2.62 | 2.65 | 2.65 | 2.66 | 2.67 |
| | 75.2°F(24.0°C) | 40272 | 39467 | 39269 | 36858 | 36526 | 2.36 | 2.38 | 2.39 | 2.39 | 2.40 |
| 359 | 5°F(-15.0°C) | 31627 | 30995 | 30840 | 29818 | 29550 | 4.25 | 4.28 | 4.29 | 4.30 | 4.32 |
| | 14°F(-10.0°C) | 32279 | 31633 | 31475 | 30432 | 30158 | 4.04 | 4.08 | 4.08 | 4.09 | 4.11 |
| | 17°F(-8.3°C) | 32496 | 31846 | 31687 | 30637 | 30361 | 3.98 | 4.01 | 4.02 | 4.02 | 4.04 |
| | 22°F(-5.6°C) | 32301 | 31655 | 31497 | 30453 | 30179 | 3.83 | 3.86 | 3.87 | 3.88 | 3.89 |
| | 27°F(-2.8°C) | 32106 | 31464 | 31307 | 30270 | 29997 | 3.68 | 3.71 | 3.72 | 3.73 | 3.74 |
| | 32°F(-0.0°C) | 31911 | 31273 | 31117 | 30086 | 29815 | 3.54 | 3.57 | 3.57 | 3.58 | 3.59 |
| | 35°F(1.7°C) | 31795 | 31159 | 31003 | 29976 | 29706 | 3.45 | 3.48 | 3.48 | 3.49 | 3.50 |
| | 37°F(2.8°C) | 35325 | 34618 | 34445 | 33304 | 33004 | 3.57 | 3.59 | 3.60 | 3.61 | 3.62 |
| | 42°F(5.6°C) | 44150 | 43267 | 43051 | 41625 | 41250 | 3.86 | 3.89 | 3.89 | 3.90 | 3.92 |
| | 44.6°F(7.0°C) | 47680 | 46727 | 46493 | 44953 | 44548 | 3.97 | 4.00 | 4.01 | 4.02 | 4.04 |
| | 47°F(8.3°C) | 52976 | 51916 | 51657 | 49945 | 49496 | 4.15 | 4.18 | 4.19 | 4.20 | 4.21 |
| | 52°F(11.1°C) | 51707 | 50673 | 50420 | 48749 | 48311 | 3.88 | 3.91 | 3.92 | 3.92 | 3.94 |
| | 57°F(13.9°C) | 50439 | 49430 | 49183 | 47554 | 47126 | 3.61 | 3.64 | 3.64 | 3.65 | 3.67 |
| | 59°F(15.0°C) | 49932 | 48933 | 48688 | 47075 | 46652 | 3.50 | 3.53 | 3.53 | 3.54 | 3.56 |
| | 62°F(16.7°C) | 49171 | 48187 | 47946 | 46358 | 45941 | 3.34 | 3.36 | 3.37 | 3.38 | 3.39 |
| | 64.4°F(18.0°C) | 48562 | 47591 | 47353 | 45784 | 45372 | 3.21 | 3.23 | 3.24 | 3.25 | 3.26 |
| | 69.8°F(21.0°C) | 51260 | 50235 | 49983 | 48327 | 47892 | 2.92 | 2.94 | 2.95 | 2.95 | 2.96 |
| | 75.2°F(24.0°C) | 45864 | 44947 | 44722 | 43240 | 42851 | 2.63 | 2.65 | 2.65 | 2.66 | 2.67 |

**Table 16 – 24K Heating Performance (Continued)**

| AIRFLOW (CFM) | HEATING PERFORMANCE AT INDOOR DRY BULB TEMPERATURE | | | | | | | | | | |
|---|---|---|---|---|---|---|---|---|---|---|---|
| | OUTDOOR DB(°F) | TC: Total Heating Capacity (BTU/hr) | | | | | PI: Power Input (kW) | | | | |
| | | Indoor Conditions(DB °F) | | | | | Indoor Conditions(DB °F) | | | | |
| | | 60.8°F (16.0°C) | 68°F (20.0°C) | 70°F (21.1°C) | 71.6°F (22.0°C) | 75.2°F (24.0°C) | 60.8°F (16.0°C) | 68°F (20.0°C) | 70°F (21.1°C) | 71.6°F (22.0°C) | 75.2°F (24.0°C) |
| 447 | 5°F(-15.0°C) | 36019 | 35299 | 35122 | 34982 | 34667 | 4.72 | 4.76 | 4.77 | 4.78 | 4.80 |
| | 14°F(-10.0°C) | 36761 | 36026 | 35846 | 35702 | 35381 | 4.49 | 4.53 | 4.54 | 4.55 | 4.57 |
| | 17°F(-8.3°C) | 37008 | 36268 | 36087 | 35942 | 35619 | 4.42 | 4.45 | 4.46 | 4.47 | 4.49 |
| | 22°F(-5.6°C) | 36786 | 36051 | 35870 | 35727 | 35405 | 4.25 | 4.29 | 4.30 | 4.31 | 4.32 |
| | 27°F(-2.8°C) | 36564 | 35833 | 35654 | 35511 | 35192 | 4.09 | 4.13 | 4.13 | 4.14 | 4.16 |
| | 32°F(-0.0°C) | 36343 | 35616 | 35438 | 35296 | 34978 | 3.93 | 3.96 | 3.97 | 3.98 | 3.99 |
| | 35°F(1.7°C) | 36209 | 35485 | 35308 | 35167 | 34850 | 3.83 | 3.86 | 3.87 | 3.88 | 3.89 |
| | 37°F(2.8°C) | 40230 | 39425 | 39228 | 39071 | 38719 | 3.96 | 3.99 | 4.00 | 4.01 | 4.03 |
| | 42°F(5.6°C) | 50281 | 49275 | 49029 | 48833 | 48393 | 4.28 | 4.32 | 4.33 | 4.34 | 4.35 |
| | 44.6°F(7.0°C) | 54301 | 53215 | 52949 | 52737 | 52262 | 4.41 | 4.45 | 4.46 | 4.47 | 4.48 |
| | 47°F(8.3°C) | 60332 | 59125 | 58829 | 58594 | 58067 | 4.61 | 4.64 | 4.65 | 4.66 | 4.68 |
| | 52°F(11.1°C) | 58887 | 57709 | 57421 | 57191 | 56676 | 4.31 | 4.34 | 4.35 | 4.36 | 4.38 |
| | 57°F(13.9°C) | 57443 | 56294 | 56012 | 55788 | 55286 | 4.01 | 4.04 | 4.05 | 4.06 | 4.07 |
| | 59°F(15.0°C) | 56865 | 55728 | 55449 | 55227 | 54730 | 3.89 | 3.92 | 3.93 | 3.93 | 3.95 |
| | 62°F(16.7°C) | 55998 | 54878 | 54604 | 54385 | 53896 | 3.71 | 3.74 | 3.75 | 3.75 | 3.77 |
| | 64.4°F(18.0°C) | 55305 | 54199 | 53928 | 53712 | 53229 | 3.56 | 3.59 | 3.60 | 3.61 | 3.62 |
| | 69.8°F(21.0°C) | 58377 | 57210 | 56924 | 56696 | 56186 | 3.24 | 3.27 | 3.27 | 3.28 | 3.29 |
| | 75.2°F(24.0°C) | 52232 | 51188 | 50932 | 50728 | 50272 | 2.92 | 2.94 | 2.95 | 2.95 | 2.96 |
| 459 | 5°F(-15.0°C) | 16295 | 15970 | 15890 | 15826 | 15684 | 2.39 | 2.41 | 2.42 | 2.42 | 2.43 |
| | 14°F(-10.0°C) | 18860 | 18483 | 18391 | 18317 | 18152 | 2.50 | 2.52 | 2.52 | 2.53 | 2.54 |
| | 17°F(-8.3°C) | 19716 | 19321 | 19225 | 19148 | 18975 | 2.53 | 2.55 | 2.56 | 2.56 | 2.57 |
| | 22°F(-5.6°C) | 21076 | 20655 | 20552 | 20469 | 20285 | 2.65 | 2.67 | 2.67 | 2.68 | 2.69 |
| | 27°F(-2.8°C) | 22437 | 21989 | 21879 | 21791 | 21595 | 2.76 | 2.78 | 2.79 | 2.79 | 2.81 |
| | 32°F(-0.0°C) | 23798 | 23322 | 23206 | 23113 | 22905 | 2.88 | 2.90 | 2.90 | 2.91 | 2.92 |
| | 35°F(1.7°C) | 24615 | 24123 | 24002 | 23906 | 23691 | 2.94 | 2.97 | 2.97 | 2.98 | 2.99 |
| | 37°F(2.8°C) | 25123 | 24621 | 24498 | 24400 | 24180 | 2.95 | 2.97 | 2.98 | 2.99 | 3.00 |
| | 42°F(5.6°C) | 26394 | 25866 | 25737 | 25634 | 25403 | 2.96 | 2.99 | 2.99 | 3.00 | 3.01 |
| | 44.6°F(7.0°C) | 26902 | 26364 | 26232 | 26127 | 25892 | 2.97 | 2.99 | 3.00 | 3.01 | 3.02 |
| | 47°F(8.3°C) | 27664 | 27111 | 26976 | 26868 | 26626 | 2.98 | 3.00 | 3.01 | 3.02 | 3.03 |
| | 52°F(11.1°C) | 27694 | 27140 | 27005 | 26897 | 26655 | 2.76 | 2.78 | 2.78 | 2.79 | 2.80 |
| | 57°F(13.9°C) | 27724 | 27170 | 27034 | 26926 | 26683 | 2.53 | 2.55 | 2.56 | 2.56 | 2.57 |
| | 59°F(15.0°C) | 27736 | 27181 | 27045 | 26937 | 26695 | 2.44 | 2.46 | 2.47 | 2.47 | 2.48 |
| | 62°F(16.7°C) | 27754 | 27199 | 27063 | 26955 | 26712 | 2.31 | 2.33 | 2.33 | 2.34 | 2.35 |
| | 64.4°F(18.0°C) | 27768 | 27213 | 27077 | 26969 | 26726 | 2.20 | 2.22 | 2.22 | 2.23 | 2.24 |
| | 69.8°F(21.0°C) | 21922 | 21484 | 21376 | 21291 | 21099 | 1.96 | 1.98 | 1.98 | 1.98 | 1.99 |
| | 75.2°F(24.0°C) | 20948 | 20529 | 20426 | 20345 | 20162 | 1.72 | 1.73 | 1.74 | 1.74 | 1.75 |

## WIRING

All wires must be sized per NEC (National Electrical Code) or CEC (Canadian Electrical Code) and local codes. Use Electrical Data table MCA (minimum circuit amps) and MOCP (maximum over current protection) to correctly size the wires and the disconnect fuse or breakers respectively.

**Recommended Connection Method for Power and Communication Wiring:**

The main power is supplied to the outdoor unit. The field supplied 14/3 stranded wire with ground with a 600 volt insulation rating, power/communication wiring from the outdoor unit to indoor unit consists of four (4) wires and provides the power for the indoor unit.

Two wires are line voltage AC power, one is communication wiring (S) and the other is a ground wire. Wiring between indoor and outdoor unit is polarity sensitive. The use of BX wire is NOT recommended.

If installed in a high Electromagnetic field (EMF) area and communication issues exists, a 14/2 stranded shielded wire can be used to replace L2/N and (S) between outdoor unit and indoor unit landing the shield onto ground in the outdoor unit only.

**⚠ CAUTION**

**EQUIPMENT DAMAGE HAZARD**

Failure to follow this caution may result in equipment damage or improper operation.

Wires should be sized based on NEC and local codes.

**⚠ CAUTION**

**EQUIPMENT DAMAGE HAZARD**

Failure to follow this caution may result in equipment damage or improper operation.

Be sure to comply with local codes while running wire from the indoor unit to the outdoor unit.

Every wire must be connected firmly. Loose wiring may cause the terminal to overheat or result in unit malfunction. A fire hazard may also exist. Ensure all wiring is tightly connected.

No wire should touch the refrigerant tubing, compressor or any moving parts.

Disconnecting means must be provided and shall be located within sight and readily accessible from the air conditioner.

Connecting cable with conduit shall be routed through the hole in the conduit panel.

## WIRING DIAGRAMS

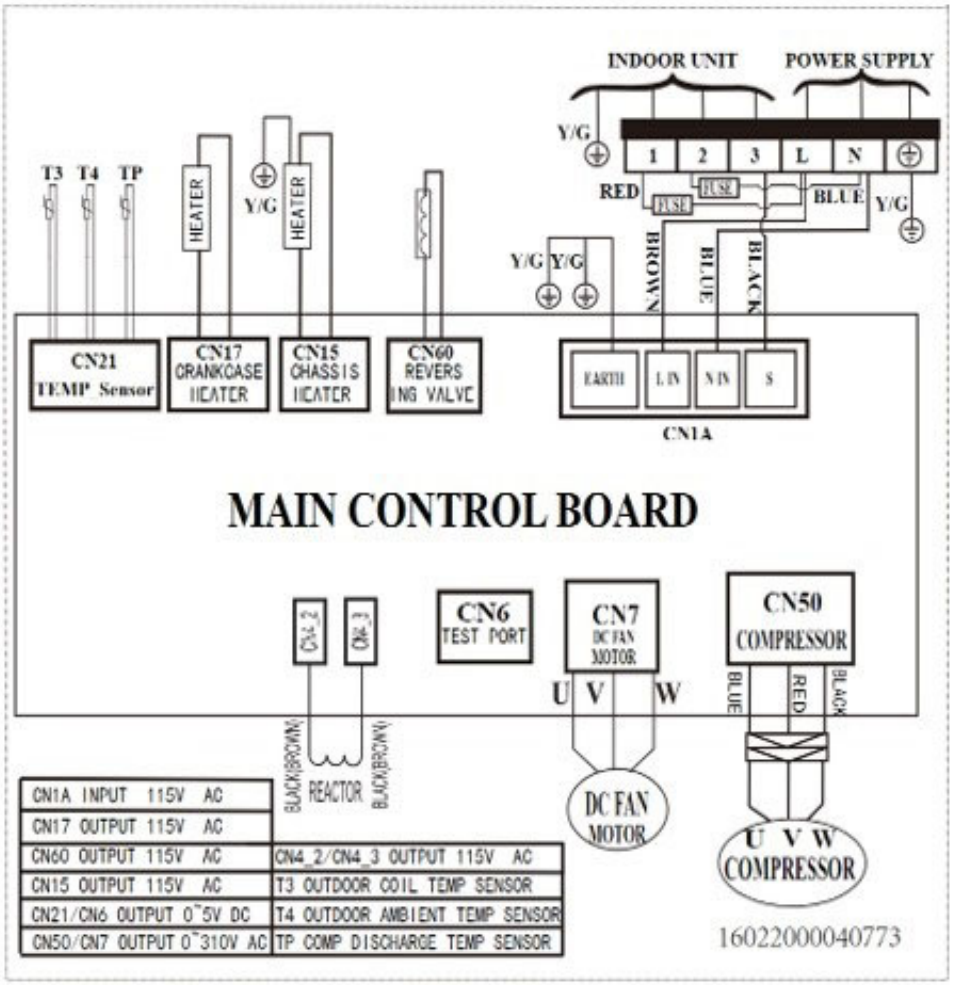


**Fig. 5 – 9K - 12K 115V**

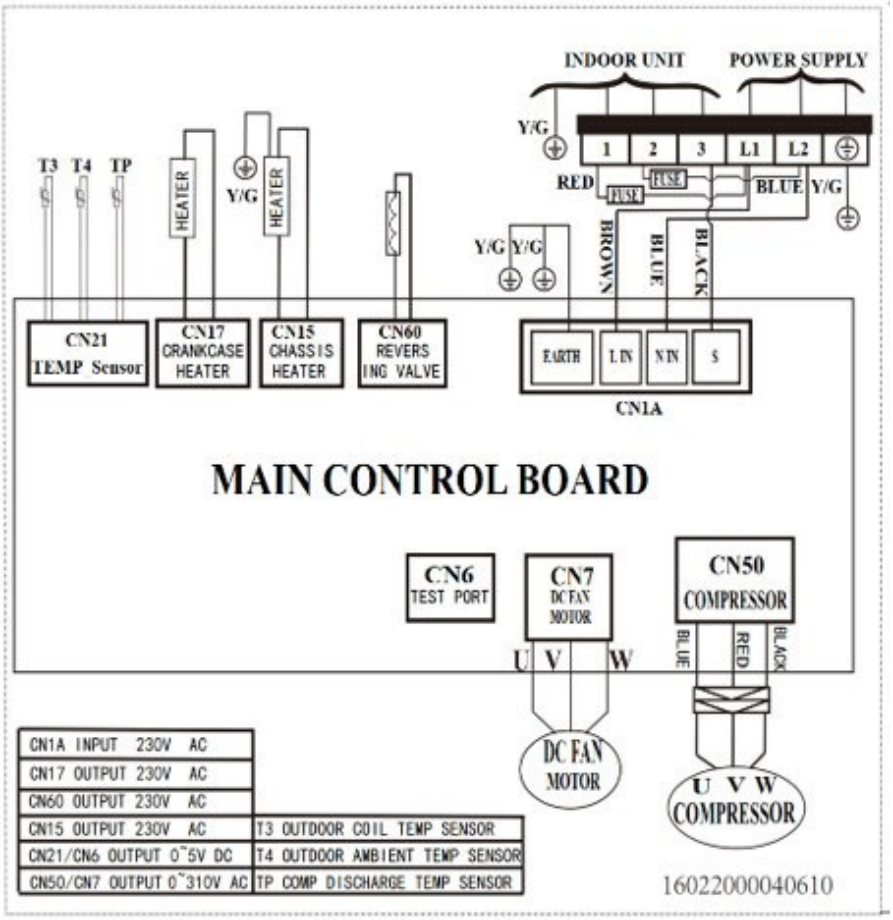


**Fig. 6 – 9K - 12K - 18K**

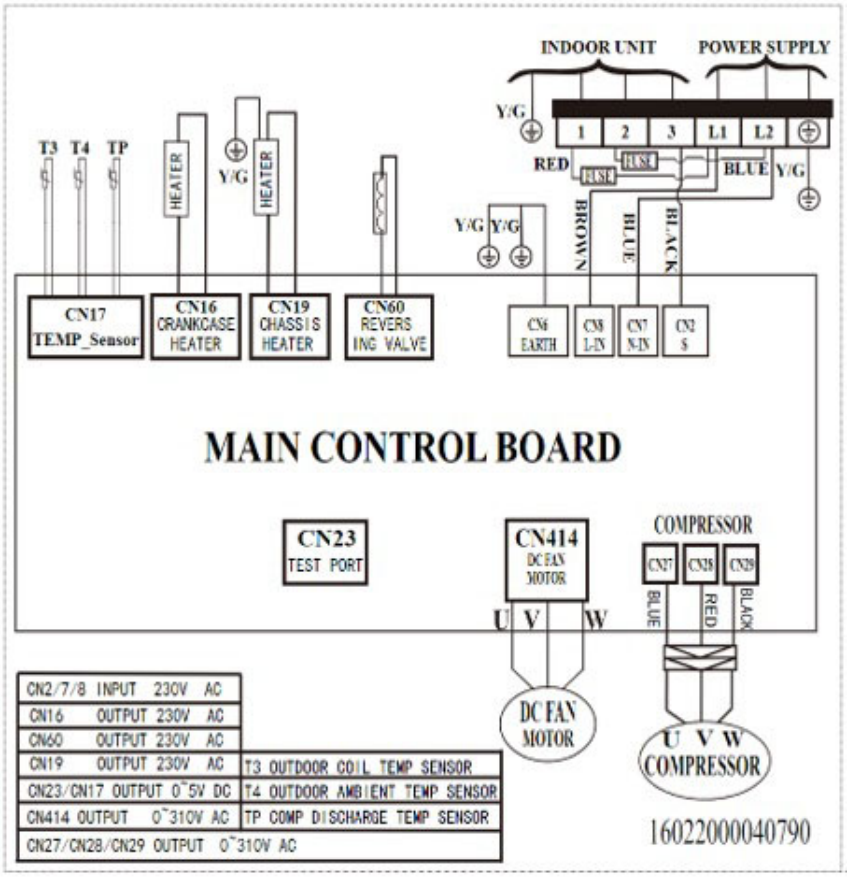


**Fig. 7 – 24K**

# GUIDE SPECIFICATIONS
## HORIZONTAL DISCHARGE OUTDOOR UNITS

Size Range: 3/4 to 2 Ton Nominal Cooling and Heating Capacity

Model Number: **D5CVRA**

## Part 1 - GENERAL

### 1.01 System Description

1. Outdoor air-cooled split system compressor sections suitable for on-the-ground, rooftop, wall hung or balcony mounting. Units consist of a rotary compressor, an air-cooled coil, propeller-type draw-through outdoor fan, reversing valve (HP), accumulator (HP units), metering device(s), and a control box. Units discharge air horizontally as shown on the contract drawings. Units function as the outdoor component of an air-to-air heat pump system.
2. Units are to be used in a refrigeration circuit matched to ductless heat pump fan coil units.

### 1.02 Agency Listings

1. Unit construction complies with ANSI/ASHRAE 15, latest revision, and with the NEC.
2. Units are evaluated in accordance with UL standard 60335-2-40.
3. Units are listed in the CEC directory.
4. Unit cabinet is capable of withstanding 500-hour salt spray test per Federal Test Standard No. 141 (method 6061).
5. Air-cooled condenser coils are leak tested at 550 psig.

### 1.03 Delivery, Storage, And Handling

Units are shipped in one piece and are stored and handled per unit manufacturer's recommendations.

### 1.04 Warranty (For Inclusion By Specifying Engineer)

## Part 2 - PRODUCTS

### 2.01 Equipment

A. **General:**

Factory assembled, single piece, air-cooled outdoor unit. Contained within the unit enclosure is all the factory wiring, piping, controls, and the compressor.

B. **Unit Cabinet:**

1. Unit cabinet is constructed of galvanized steel, bonderized and coated with a baked-enamel finish on the inside and outside.
2. Unit access panels is removable with minimal screws and provides full access to the compressor, fan, and control components.
3. The outdoor compartment is isolated and has an acoustic lining to assure quiet operation.

C. **Fans:**

1. Outdoor fans are the direct drive propeller type, and discharges air horizontally. Fans draw air through the outdoor coil.
2. Outdoor fan motors are totally enclosed, single phase motors with class E insulation and permanently lubricated ball bearings. Motor shall be protected by internal thermal overload protection.
3. The shaft has inherent corrosion resistance.
4. Fan blades are non-metallic and statically and dynamically balanced.
5. Outdoor fan openings are equipped with a PVC metal/mesh coated protection grille over the fan.

**D. Compressor:**

1. Compressor is the fully hermetic rotary type.
2. Compressor is equipped with an oil system, operating oil charge, and a motor.
3. Motor is NEMA rated class E, suitable for operation in a refrigerant atmosphere.
4. Compressor assembly is installed on rubber vibration isolators.

**E. Outdoor Coil:**

The coil is constructed of aluminum hydrophilic pre-coated fins mechanically bonded to seamless copper tubes, which are cleaned, dehydrated, and sealed.

**F. Refrigeration Components:**

Refrigerant circuit components include a brass external liquid line service valve with service gage port connections, a suction line service valve with a service gage connection port, service gage port connections on compressor suction and discharge lines with Schrader type fittings with brass caps, accumulator, reversing valve.

**G. Controls and Safeties:**

Operating controls and safeties are factory selected, assembled, and tested. The minimum control functions include the following:

1. Controls:
   - A time delay control sequence is provided standard through the fan coil board
   - Automatic outdoor fan motor protection.
2. Safeties:
   - System diagnostics
   - Compressor motor current and temperature overload protection
   - Outdoor fan failure protection.

**H. Electrical Requirements:**

1. Unit operates on single-phase, 60 Hz power at 115V for unit size 09 and 12 and 208/230V for unit sizes 09, 12, 18, 24 as specified.
2. Unit electrical power has a single point connection.
3. Unit Control voltage to the indoor fan coil is 0-15V DC.
4. All power and control wiring must be installed per NEC and all local electrical codes.
5. The unit has high and low voltage terminal block connections.

**Manufacturer reserves the right to change, at any time, specifications and designs without notice and without obligations.**

**NOTE:**

© 2026 Carrier. All rights reserved.

**Manufacturer reserves the right to change, at any time, specifications and designs without notice and without obligations.**