Arcoaire®
Air Conditioning & Heating

D5FUHA
Crossover Air Handler
Sizes 24K, 36K, and 60K

Product Data

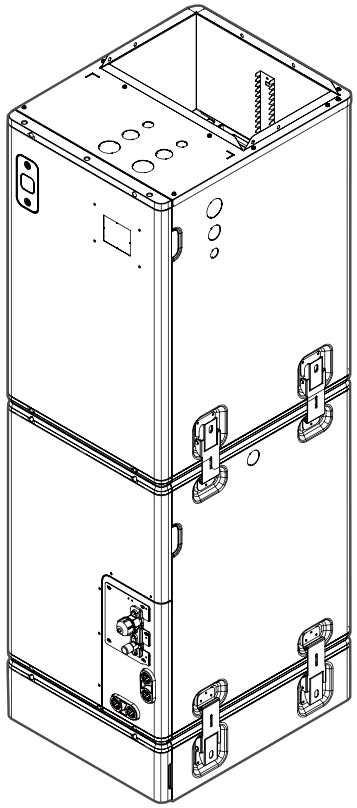

Fig. 1 — Sizes 24K, 36K, and 60K

NOTE: Images are for illustration purposes **only**. Actual models may differ slightly.

TABLE OF CONTENTS

INDUSTRY LEADING FEATURES / BENEFITS 2
MODEL NUMBER NOMENCLATURE 3
STANDARD FEATURES AND ACCESSORIES 4
ACCESSORIES 4
DIMENSIONS 6
FILTERS. 7
CLEARANCES 7
SPECIFICATIONS. 8
APPLICATION DATA 9
WIRING REQUIREMENTS 10
CONTROL SYSTEM. 10
WIRED REMOTE CONTROLLER 11
AIR FLOW DATA 11
SOUND PRESSURE TESTING METHOD 12
SOUND PRESSURE 12
SOUND PRESSURE IN OCTAVE BANDS. 13
FAN PERFORMANCE 14
FAN AND MOTOR SPECIFICATIONS 25
WIRING DIAGRAMS 26
TROUBLESHOOTING 27
GUIDE SPECIFICATIONS 28

INDUSTRY LEADING FEATURES / BENEFITS

A PERFECT BALANCE BETWEEN BUDGET LIMITS, ENERGY SAVINGS AND COMFORT

The **D5FUHA** series Air Handler unit ductless systems are a matched combination of an outdoor condensing unit and an indoor fan coil unit connected only by refrigerant tubing and wires. The fan coil is mounted in the ceiling.

This selection of fan coils permits creative solutions to design problems such as:

- Add-ons to current space (an office or family room addition)
- Special space requirements
- When changes in the load cannot be handled by the existing system
- Historical renovations or any application where preserving the look of the original structure is essential.

These compact indoor fan coil units take up very little space above the ceiling. Advanced system components incorporate innovative technology to provide reliable cooling performance at low sound levels.

LOW SOUND LEVELS

When noise is a concern, the ductless systems are the answer. The indoor units are whisper quiet. There are no compressors indoors, either in the conditioned space or directly over it, and there is none of the noise usually generated by air being forced through ductwork.

SECURE OPERATION

If security is an issue, outdoor and indoor units are connected only by refrigerant piping and wiring to prevent intruders from crawling through the ductwork. In addition, since outdoor units can be installed close to an outside wall, coils are protected from vandals and severe weather.

FAST INSTALLATION

This compact ductless system is simple to install. A mounting bracket and duct work is needed for the indoor units, and only wire and piping need run between the indoor and outdoor units. These units are fast and easy to install ensuring minimal disruption to customers in the home or workplace. This makes the air handler systems the equipment of choice, especially in retrofit situations.

SIMPLE SERVICING AND MAINTENANCE

Removing the top panel on the outdoor units provides immediate access to the control compartment, providing a service technician access to check unit operation. In addition, the draw-thru design of the outdoor section means that dirt accumulates on the outside surface of the coil. Coils can be cleaned quickly from the inside using a pressure hose and detergent.

On all indoor units, service and maintenance expense is reduced due to easy accessible service panels. In addition, these air handler systems have extensive self-diagnostics to assist in troubleshooting.

BUILT-IN RELIABILITY

The air handler ductless system indoor and outdoor units are designed to provide years of trouble-free operation.

The air handler indoor units include protection against freeze-up and high evaporator temperatures on heat pumps.

The condensing units on the heat pumps are protected by a three minute delay that provides over-current protection and high temperature protection prior to the start of the compressor.

ECONOMICAL OPERATION

The air handler ductless system design allows for multi-room heating or cooling when required. There is no need to run large supply-air fans or chilled water pumps to handle a few spaces with unique load patterns.

EASY-TO-USE CONTROLS

The air handler units have microprocessor-based controls to provide the ultimate in comfort and efficiency. The user-friendly wired and wireless remote control provides the interface between the user and the unit.

MULTI-POISE INSTALLATION

Designed for maximum installation flexibility. The secondary drain built-in allows the unit to be mounted in an upflow, downflow, left or right installation depending on existing conditions.

24V INTERFACE

The built-in 24V Interface allows users to control the ductless system with a third party thermostat.

AGENCY LISTINGS

Conforms to UL STD 60335-1, 60335-2-40.

Certified to CSA STD C22.2 No. 60335-1, 60335-2-40.

INNOVATIVE MODULAR DESIGN

- Screwless connection enables the installers to assemble and dissemble easily during installation.
- Slim body especially friendly for attic space with upstairs & downstairs and narrow entrance.
- Modular design and smaller pieces enable one-man operation.
- Allows lowboy installation position that has flexible requirements for installation spaces.

SYMMETRIC FAN BLOWER DESIGN

- Optimized structure to enhance airflow circulation for even airflow circulation and higher efficiency.

SIMPLIFY THE INSTALLATION PROCESS

- Just rotate and move two modules to fit different installation styles, no need to reconfigure the coil.
- Easy to do the lowboy style without cutting the unit.

COMPUTATIONAL CONSTANT AIRFLOW

- Computational Constant Airflow technology enables airflow to automatically adapt to the existing ductwork design, or issues caused by blocked coils, dirty filters and improper duct sizing. This is done by adjusting output power and fan speeds. Even with no call for heating or cooling, the Computational Constant Airflow technology will still work to ensure optimal airflow.
- The upgraded Computational Constant Airflow technology also offers flexibility to adjust air volume according to the customers' personal needs. All of the adjustments can be made easily through the "Engineer Mode" on the remote control/wired controller.

REFRIGERANT LEAK MITIGATION SYSTEM

The unit Includes a refrigerant leak mitigation system, and there is no need to re-orient the refrigerant leak sensor for different install positions.

MEDIA FILTER CABINET

The unit includes a 4" filter media cabinet.

115V or 208/230V INTERCHANGABLE

The unit has the ability to utilize 115V or 208/230V automatically.

Manufacturer reserves the right to change, at any time, specifications and designs without notice and without obligations.

MODEL NUMBER NOMENCLATURE

INDOOR UNIT

D5 FU H A Q 24 X A K

D5 = INDOOR UNIT

FU = UNITARY

INDOOR FAN COIL UNIT TYPE
H = AIR HANDLER

MAJOR SERIES

UNIT TYPE
Q = Heat Pump

NOMINAL CAPACITY
24 - 2 TON
36 - 3 TON
60 - 5 TONS

VOLTAGE
K = 208/230-1-60*
* May be configured for 115 Volt AC

A = CROSSOVER

X = INDOOR UNIT

Use of the AHRI Certified TM Mark indicates a manufacturer's participation in the program For verification of certification for individual products, go to www.ahridirectory.org.

STANDARD FEATURES AND ACCESSORIES

EASE OF INSTALLATION	
Low Voltage Controls	S
Dual Power Voltage	S
COMFORT FEATURES	
Microprocessor Controls	S
24V Interface built-in for third party thermostat controls	S
Wireless Remote Controller	S
Wired Remote Controller (Sold separately)	A
Auto Restart Function	S
Cold Blow Protection on Heat Pumps	S
Freeze Protection Mode on Heat Pumps	S
Turbo Mode	S
Auto Changeover on Heat Pumps	S
SAFETY AND RELIABILITY	
Indoor Coil Freeze Protection	S
Aluminum Hydrophilic pre-coated fins	S
Indoor Coil High Temp Protection in Heating Mode	S
EASE OF SERVICE AND MAINTENANCE	
4" Magnetic Filter Rack (can fit 1 or 2 or 4" filter)	S
Cleanable Filters	S
Diagnostics	S
APPLICATION FLEXIBILITY	
Multi-poise Installation	S

Legend

S - Standard

A - Accessory

ACCESSORIES

Table 1 — Model Size / Heater Selection

MODEL / (BTU/H CONFIGURATION)	EHKMD05KN (5KW)	EHKMD08KN (8KW)	EHKMD10KN (10KW)	EHKMD15KN (15KW)	EHKMD20KN (20KW)	EHKMD25KN (25KW)
D5FUHAH24XAK (18K)	Y	Y	Y	-	-	-
D5FUHAH24XAK (24K)	Y	Y	Y	Y	-	-
D5FUHAH36XAK (30K)	Y	Y	Y	Y	-	-
D5FUHAH36XAK (36K)	Y	Y	Y	Y	Y	-
D5FUHAH60XAK (48K)	-	Y	Y	Y	Y	-
D5FUHAH60XAK (60K)	-	-	Y	Y	Y	Y

NOTE: Only use matched modules certified for use with model. Refer to the Electric Auxiliary Heat Model EHKMD specification for additional details to ensure proper selection and installation.

Manufacturer reserves the right to change, at any time, specifications and designs without notice and without obligations.

MULTI-POISE INSTALLATION

Different Installation Directions

The units can be installed in a vertical (down and up) and horizontal (right and left) configuration.

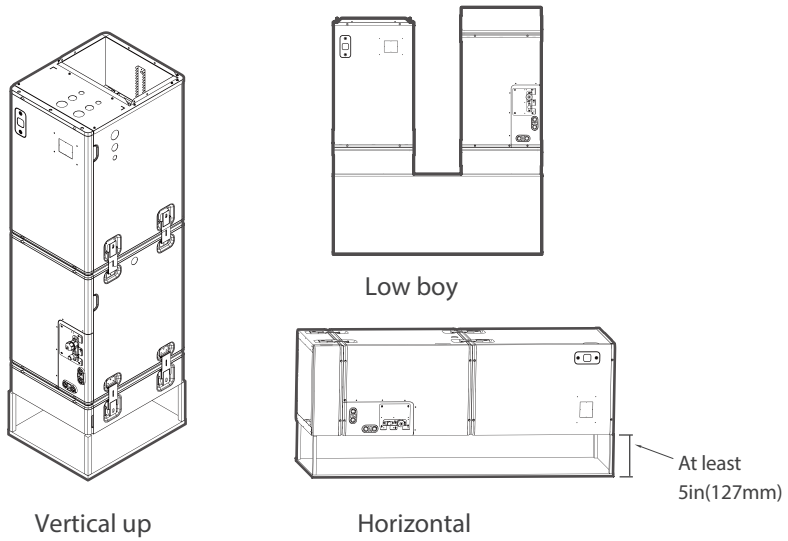

Fig. 2 — Different Installation Directions

NOTE: For horizontal installation, a secondary drain pan (not supplied) must be installed.

Airflow Direction For Different Installation Directions

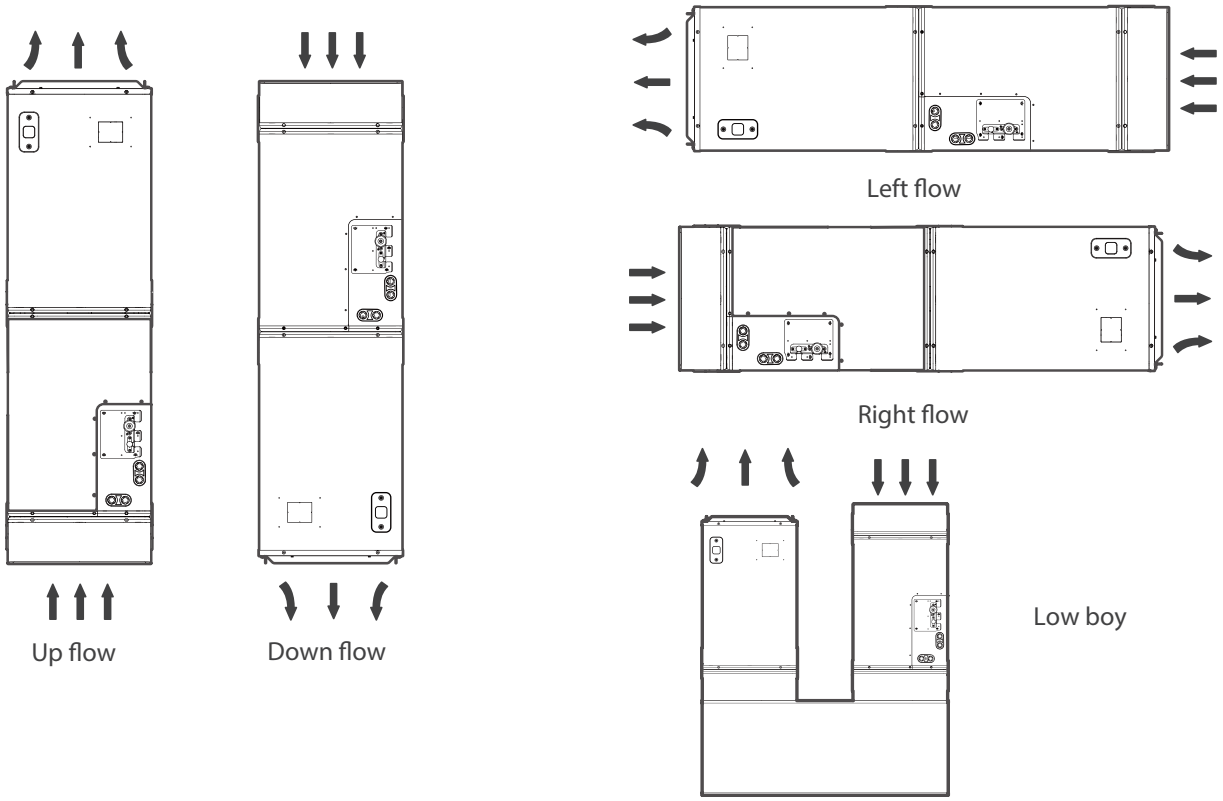

Fig. 3 — Airflow Direction For Different Installation Directions

DIMENSIONS

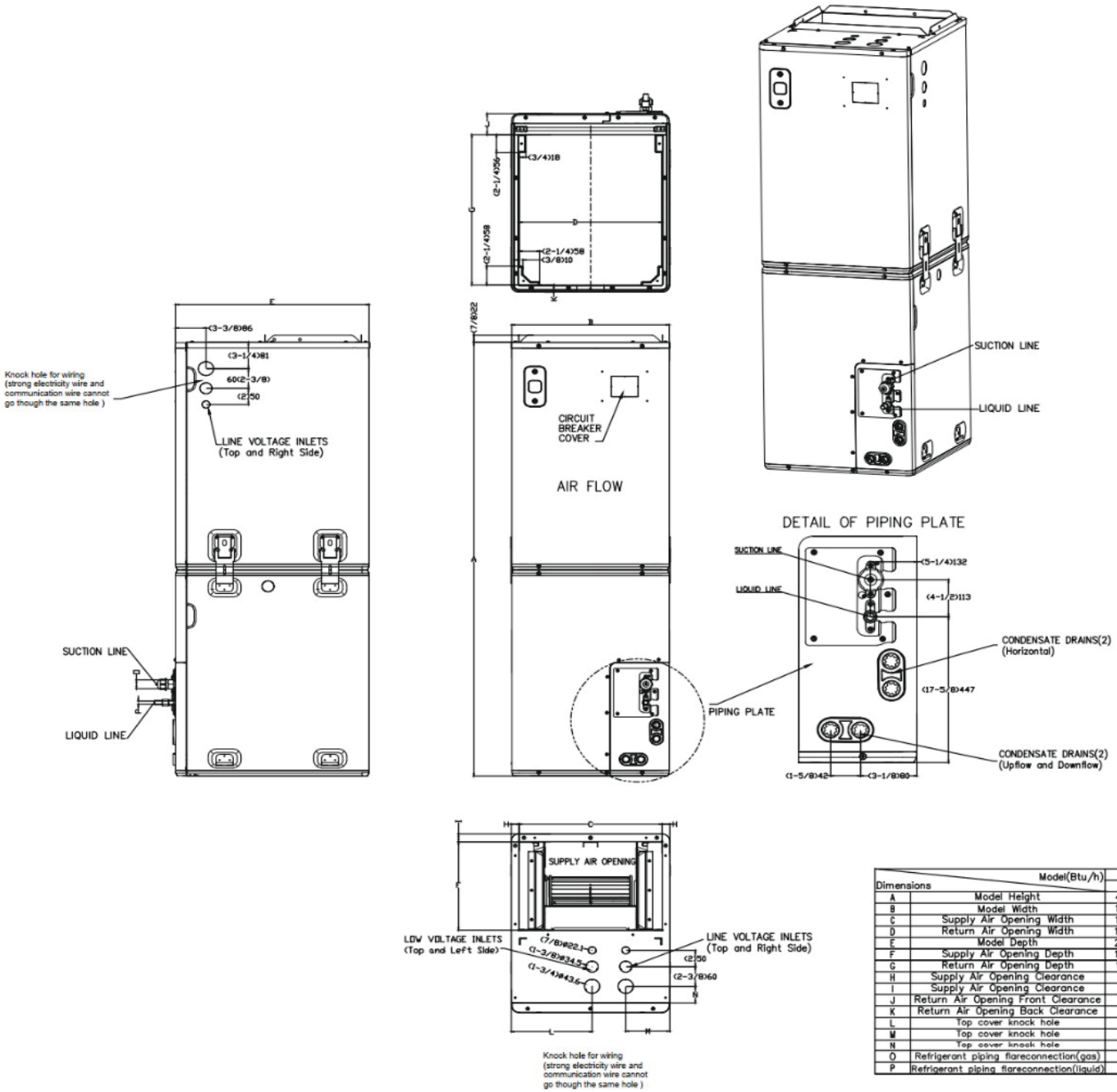

Dimensions	Model(Btu/h)	18K/24K		30K/36K		48K/54K	
		inch	mm	inch	mm	inch	mm
A	Model Height	48-1/8	1222	52-3/8	1330	54-3/8	1380
B	Model Width	14-1/2	368	17-1/2	445	21-1/2	546
C	Supply Air Opening Width	12-7/8	328	16	405	19-7/8	506
D	Return Air Opening Width	12-7/8	326	15-7/8	402	19-7/8	504
E	Model Depth	21-1/2	546	21-1/2	546	21-1/2	546
F	Supply Air Opening Depth	10-5/8	271	10-5/8	271	10-5/8	271
G	Return Air Opening Depth	18-1/8	461	18-1/8	461	18-1/8	461
H	Supply Air Opening Clearance	7/8	22	7/8	22	7/8	22
I	Supply Air Opening Clearance	1	24	1	24	1	24
J	Return Air Opening Front Clearance	2-1/2	64	2-1/2	64	2-1/2	64
K	Return Air Opening Back Clearance	7/8	23	7/8	23	7/8	23
L	Top cover knock hole	/	/	9	229	10-7/8	275
M	Top cover knock hole	4-1/2	113	4-7/8	124	5-1/8	131
N	Top cover knock hole	2	51	2	51	1-5/8	41
O	Refrigerant piping flareconnection(gas)	3/4	19	3/4	19	3/4	19
P	Refrigerant piping flareconnection(liquid)	3/8	9	3/8	9	3/8	9

Fig. 4 — Indoor Unit Dimensions

Table 2 — Indoor Unit Dimensions

MODEL (BTU/H) DIMENSIONS		24K (18K)	36K (30K)	60K (48K)
A	inch	53-7/8	58-1/8	60-1/8
	mm	1368	1476	1526
B	inch	21-1/2	21-1/2	21-1/2
	mm	546	546	546
C	inch	14-1/2	17-1/2	21-1/2
	mm	368	445	546
D	inch	13	13	20
	mm	330	407	508
E	inch	10-1/4	10-1/4	10-1/4
	mm	273	273	273

FILTERS

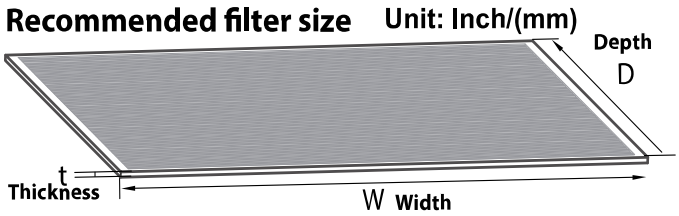

Fig. 5 — Filter

Table 3 — Recommended Filter Sizes

Model (Btu/h)	Width		Depth		Thickness	
	Inch	mm	Inch	mm	Inch	mm
18K-24K	16	406.4	20	508	1	25.4
30K-36K	19-1/2	495.3	20	508	1	25.4
48K-60K	23	584.2	20	508	1	25.4

NOTE: The user needs to purchase a standard filter that meets the requirements of UL900. For questions about the selection of filters, consult the manufacturer. Actual dimensions of applied filters can't exceed the size in Table .

Lowboy Duct Size (Applied for Lowboy Application)

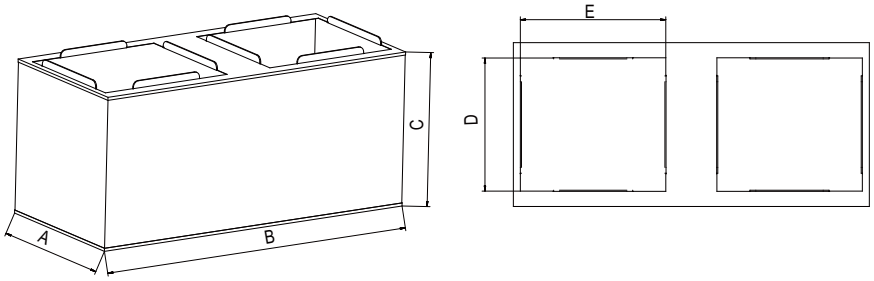

Fig. 6 — Lowboy Duct Application

Table 4 — Lowboy Duct Dimensions

		A	B (REFERENCE)	C	D	E
24K (18K)	inch	≥22	≥ 38-1/2	≥14-1/2	18	12-3/4
	mm	≥560	≥ 980	≥368	455	324
36K (30K)	inch	≥22	≥ 40	≥17-1/2	18	15-3/4
	mm	≥560	≥ 1018	≥445	455	398
60K (48K)	inch	≥22	≥ 48	≥21-1/2	18	19-1/2
	mm	≥560	≥ 1218	≥546	455	495

CLEARANCES

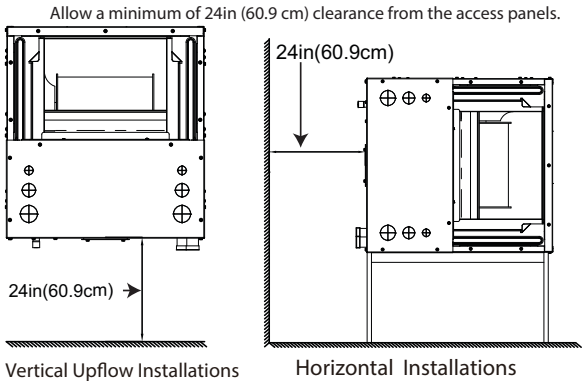

Fig. 7 — Clearances

SPECIFICATIONS

Table 5 – Specifications

SIZE			24K (18K)	36K (30K)	60K(48K)
INDOOR MODEL NUMBER			D5FUHAH24XAK	D5FUHAH36XAK	D5FUHAH60XAK
POWER SUPPLY		V;Ph;Hz	115V/ 208/230V;1Ph;60HZ	115V/ 208/230V;1Ph;60HZ	115V/ 208/230V;1Ph;60HZ
REFRIGERANT			R-454B	R-454B	R-454B
REFRIGERANT LEAK MITIGATION SENSOR			YES	YES	YES
INDOOR FAN SPECIFICATIONS	Material	-	Galvanized sheet	Galvanized sheet	Galvanized sheet
	Type	-	FLBJ-318*183*103-47N-1	FLBJ-318*234*103-47N-1	FLBJ-318*325*144-47N-1
	Diameter	inch	12.5	12.5	12.5
		mm	318	318	318
	Height	inch	7.2	9.2	12.8
		mm	183	234	325
INDOOR MOTOR SPECIFICATIONS	Model	-	ZKFW-600-10-1	ZKFW-600-10-1	ZKFW-1000-10-1
	Type	-	DC	DC	DC
	Input (0.5 in.w.g.)	W	197.0	334.0	625.0
	Max. input (1 in.w.g.)	W	292.0	477.0	833.0
	Output(0.5 in.w.g.)	W	147.8	250.5	468.8
	FLA	A	2.5	4.5	8
	Rated HP	HP	0.20	0.34	0.63
	Range of current	Amps	0.51~1.98	0.93~3.26	1.24~5.37
	Rated current	Amps	1.36	2.38	4.15
	Speed	rev/min	903/872/842/816	970/929/889/852	1136/1073/1014/919
	Rated RPM (0.5 in.w.g)	rev/min	903	970	1136
	Insulation class	-	F	F	F
	Safe class	-	IP20	IP20	IP20
INDOOR REFRIGERANT COIL SPECIFICATIONS	Number of rows	Rows	2	3	4
	Tube outside dia.	inch	0.276	0.276	0.276
		mm	Φ7	Φ7	Φ7
	Nominal Tube Wall	Inch (mm)	0.0094(0.24)	0.0094(0.24)	0.0094(0.24)
	Tube Enhancement	(Yes/No)	Yes	Yes	Yes
	Tube Material		Aluminum	Aluminum	Aluminum
	Tube pitch (a)x row pitch(b)	inch	0.83x0.53	0.83x0.53	0.83x0.53
		mm	21x13.37	21x13.37	21x13.37
	Fin Spacing	FPI	20	16	20
		mm	1.3	1.6	1.3
	Fin type		Louvered	Louvered	Louvered
	Fin Material		Gold hydrophilic aluminum	Gold hydrophilic aluminum	Gold hydrophilic aluminum
	Coil length x height x width	inch	16.34x14.88x1.05x4	16.34x16.77x2.11x4	16.34x21.5x2.11x4
		mm	415*378*26.74*4	415*426*53.48*4	415*546*53.48*4
	Face area	ft2	6.75	7.61	9.76
	Number of circuits	#	8	4	14
SOUND DATA	Indoor Sound Pressure Level (Turbo/Hi/Med/Lo/Silent)	dB(A)	N\A/47.5/44/33/N\A	48/46.5/45.0/33/N\A	60/57/54.5/37/N\A
CFM DATA	Indoor air flow data (Turbo/Hi/Med/Lo/Silent)	CFM	824.0 / 759.3 / 694.5 / 629.8 / N\A	1236.1 / 1147.8 / 1059.5 / 971.2 / N\A	1801.1 / 1648.1 / 1500.9 / 1236.1 / N\A

*Performance may vary based on the compatible outdoor units. See respective pages for performance data.

APPLICATION DATA

UNIT SELECTION

Select equipment to either match or that can handle slightly less than the anticipated peak load. This provides better humidity control, fewer unit cycles, and less part-load operation.

For units used in spaces with high sensible loads, base equipment selection on unit sensible load, not on a total anticipated load. Adjust for anticipated room wet bulb temperature to avoid undersizing equipment.

UNIT MOUNTING (INDOOR)

Refer to the unit's installation instructions for further details.

Unit leveling - For reliable operation, units should be level in all planes.

Clearance - Provide adequate clearance for airflow (see Fig. 7 — on page 7).

Unit location - Select a location which provides the best air circulation for the space.

Do not install the indoor or outdoor units in a location with special environmental conditions. For those applications, contact your ductless representative.

SUPPORT

Adequate support must be provided to support the weight of all fan coils. Refer to the "SPECIFICATIONS" on page 8 for fan coil weights. Refer to "DIMENSIONS" on page 6 for the base unit dimensional drawings which contain the location of the mounting brackets.

Table 6 – Indoor/Outdoor Operating Conditions

SIZE				24K(18K)	36K(30K)	60K(48K)
ENVIRONMENTAL SPECIFICATIONS	Cooling Operating Range	Indoor Min - Max DB	°F	60~90	60~90	60~90
			(°C)	(16~32)	(16~32)	(16~32)
		Indoor Min - Max WB	°F	59~84	59~84	59~84
			(°C)	(15~29)	(15-29)	(15-29)
		Outdoor Min - Max DB	°F	-22~122	-22~122	-22~122
			(°C)	(-30'50)	(-30'50)	(-30'50)
	Heating Operating Range	Indoor Min - Max DB	°F	32~86	32~86	32~86
			(°C)	(0~30)	(0~30)	(0~30)
		Outdoor Min - Max DB	°F	-22~75	-22~75	-22~75
			(°C)	(-30~24)	(-30~24)	(-30~24)
	Cooling Cut-in	Temperature	°F	NA	NA	NA
			(°C)	NA	NA	NA
	Cooling Cut-out	Temperature	°F	NA	NA	NA
			(°C)	NA	NA	NA
	Heating Cut-in	Temperature	°F	NA	NA	NA
			(°C)	NA	NA	NA
	Heating Cut-Out	Temperature	°F	NA	NA	NA
			(°C)	NA	NA	NA
	Non-operating environment Storage	Temperature range (DB)	°F	-49~140	-49~140	-49~140
			(°C)	(-45~60)	(-45~60)	(-45~60)
	Operation Humidity	%		0-80	0-80	0-80
	Ambient Humidity	%		0-80	0-80	0-80

DRAIN CONNECTIONS

Install the drains in compliance with the local sanitation codes.

INDOOR UNIT WIRING

⚠ CAUTION

While connecting the wires, please strictly follow the wiring diagram.The refrigerant circuit can become very hot. Keep the interconnection cable away from the copper tube.

Step 1: Prepare the cable for connection.

1. Using wire strippers, strip the insulating jacket from both ends of the signal cable to reveal about 5.9in(150mm) of the wire.
2. Strip the insulation from the ends of the wires.

Step 2: Open the front panel of the indoor unit.

Use a screwdriver, remove the cover of the electric control box on the indoor unit.

Step 3: Connect the wires to the terminals.

1. Thread the power cable and the signal cable through the wire outlet.
2. Match the wire colors/labels with the labels on the terminal block. Firmly screw the wires of each wire to its corresponding terminal. Refer to the Serial Number and Wiring Diagram located on the cover of the electric control box. Terminal block wiring. When using 208V or 230V, connect L1 and L2. When using 115V, connect L1 and L2 (L2 is used as N).

NOTE: The board will automatically detect input voltage.

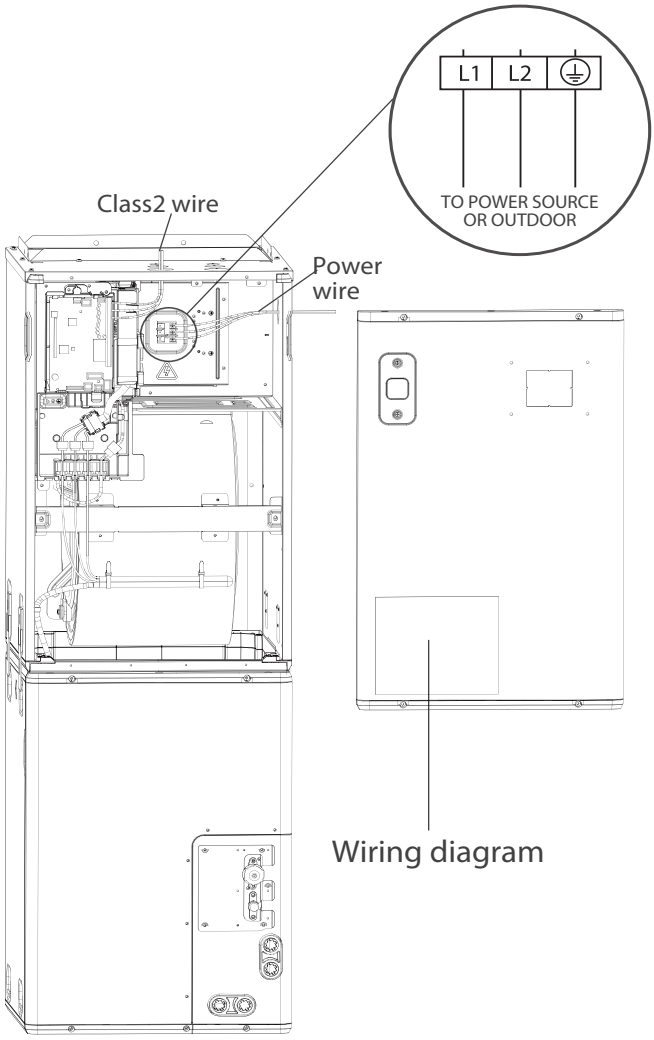

Fig. 8 — Connect the wires to the terminals (Units without electric heat option)

CAUTION

- While connecting the wires, strictly follow the wiring diagram.
- The refrigerant circuit can become very hot. Keep the interconnection cable away from the copper tube.
- The holes on cover of the electronic control box must be threaded through with armored wires.

3. Clamp down the cable with the cable clamp.The cable must not be loose or pull on the u-lugs. Reattach the electric box cover.

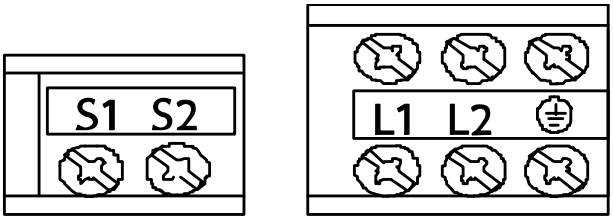

A220826

Fig. 9 —Controls and Power Terminals on Indoor Unit (All Sizes)

WIRING REQUIREMENTS

Size all wires per the NEC (National Electrical Code) or CEC (Canadian Electrical Code) and local codes. Use the electrical data from the outdoor unit (MCA - minimum circuit amps and MOCP - maximum over current protection), to correctly size the wires and the disconnect fuse or breakers respectively.

Communication Wiring: There are two options available to establish communication between the outdoor unit and approved indoor unit.

Table 7 — Options for Establishing Communication

OPTIONS	COMMUNICATION TYPE	RECOMMENDED CABLE SIZE
1	Non-Polarity RS485 Communication (S1 - S2)	16 AWG (stranded shielded)
2	24V communication	18 AWG 8 conductor thermostat wire

WARNING

Refer to the wiring template for the wiring method.

DO NOT connect the power cord to the communication line as this may damage the system.

CAUTION

EQUIPMENT DAMAGE HAZARD

Be sure to comply with local codes while running wire from the indoor unit to the outdoor unit.

Every wire must be connected firmly. Loose wiring may cause the terminal to overheat or result in a unit malfunction. A fire hazard may also exist. Ensure all wiring is tightly connected.

No wire should touch the refrigerant tubing, compressor or any moving parts.

Disconnecting means must be provided and located within sight and readily accessible from the system. Route the connecting cable with conduit through the hole in the conduit panel.

NOTE: Separate power is required for an Auxiliary Electric Heater.

CAUTION

EQUIPMENT DAMAGE HAZARD

Comply with local codes while running wire from the indoor unit to the outdoor unit. Every wire must be connected firmly. Loose wiring may cause the terminal to overheat or result in a unit malfunction. A fire hazard may also exist. Ensure all wiring is tightly connected.

No wire should touch the refrigerant tubing, compressor or any moving parts.

Disconnecting means must be provided and located within sight and readily accessible from the system. Route the connecting cable with conduit through the hole in the conduit panel.

CONTROL SYSTEM

CAUTION

EQUIPMENT DAMAGE HAZARD

Comply with local codes while running wire from the indoor unit to the outdoor unit. Every wire must be connected firmly. Loose wiring may cause the terminal to overheat or result in a unit malfunction. A fire hazard may also exist. Ensure all wiring is tightly connected.

No wire should touch the refrigerant tubing, compressor or any moving parts.

Disconnecting means must be provided and located within sight and readily accessible from the system. Route the connecting cable with conduit through the hole in the conduit panel.

The indoor unit is equipped with a microprocessor control to perform two functions:

1. Provide safety for the system
2. Control the system and provide optimum levels of comfort and efficiency.

The main microprocessor is located on the control board of the fan coil unit (outdoor units have a microprocessor also) with thermistors located in the fan coil air inlet and on the indoor coil. Heat pump units have a thermistor on the outdoor coil. These thermistors monitor the system's operation to keep the unit within acceptable parameters and control the operating mode.

WIRED REMOTE CONTROLLER

Fig. 10 — KSACN1401AAA Wired Remote Controller

NOTE: The wired controller and 24 volt thermostat CANNOT be simultaneously connected.
Wired remote controller KSACN1401AAA sold separately.

BUILT IN 24 VOLT INTERFACE

The indoor unit comes equipped with a 24V interface that provides further flexibility, functionality and control allowing it to be controlled by any 3rd party heat pump thermostat (field supplied).

NOTE: A heat pump thermostat is required. A 2 heat/1 cool thermostat is required for electric heat applications.

AIR FLOW DATA

Table 8 — Air Flow Data

SYSTEM SIZE		24K (18K)	36K (30K)	60K (48K)
AIRFLOW** (CFM)	HIGH	759.3	1147.8	1648.1
	MEDIUM	694.5	1059.5	1500.9
	LOW	629.8	971.2	1236.1

Airflow values obtained at AHRI 210/240 rating conditions.
**Measured at rates static pressure:
NOTE: Information given here is for the default capacity of each size.

SOUND PRESSURE TESTING METHOD

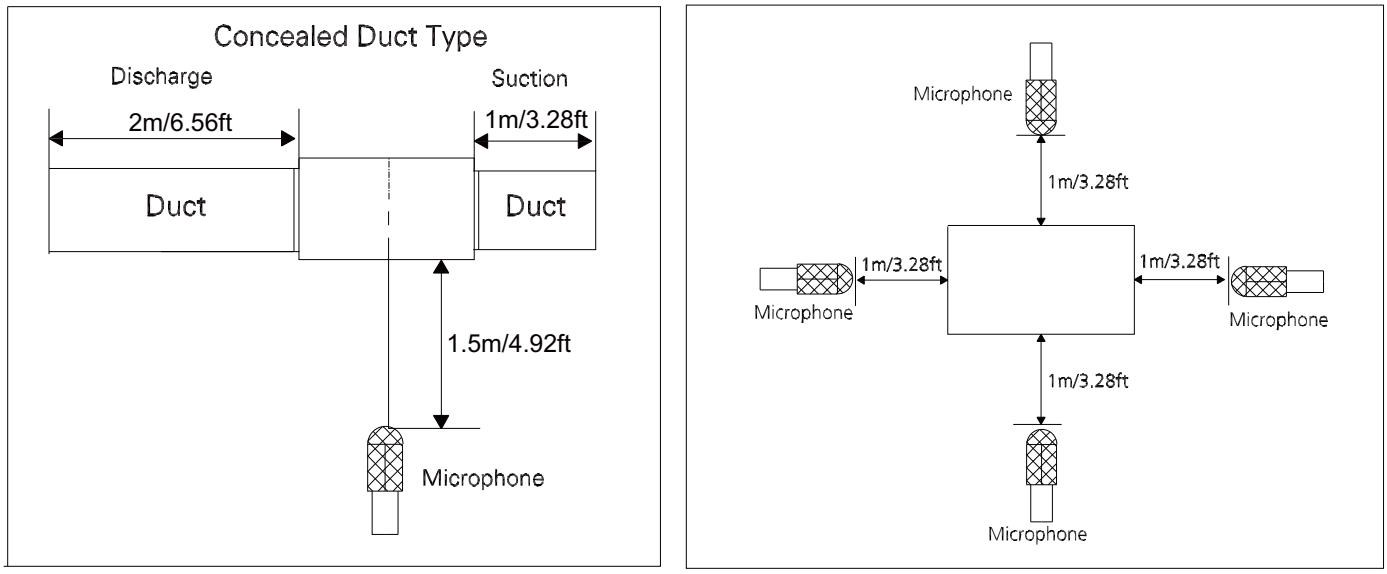

Fig. 11 — Sound Pressure Testing Method

SOUND PRESSURE

Table 9 — Sound Pressure

AIR HANDLER INDOOR		24K(18K)	36K (30K)	60K(48K)
INDOOR SOUND PRESSURE	dBA at:			
	High	47.5	46.5	57
	Med	44	45.0	54.5
	Low CFM	33	33	37

NOTE: Information given here is for the default capacity of each size.

SOUND PRESSURE IN OCTAVE BANDS

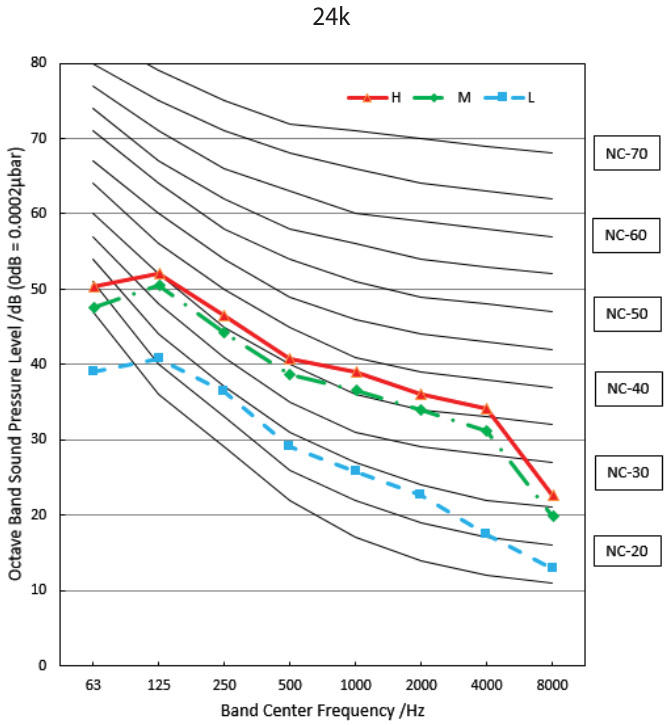

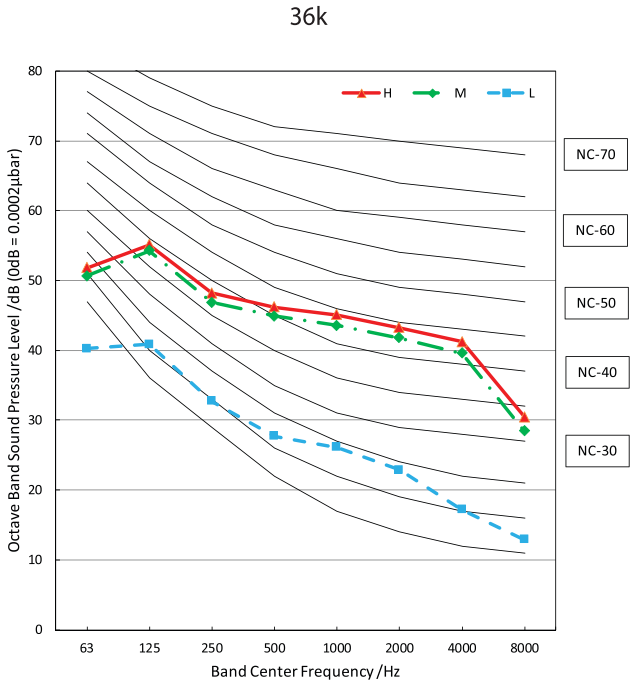

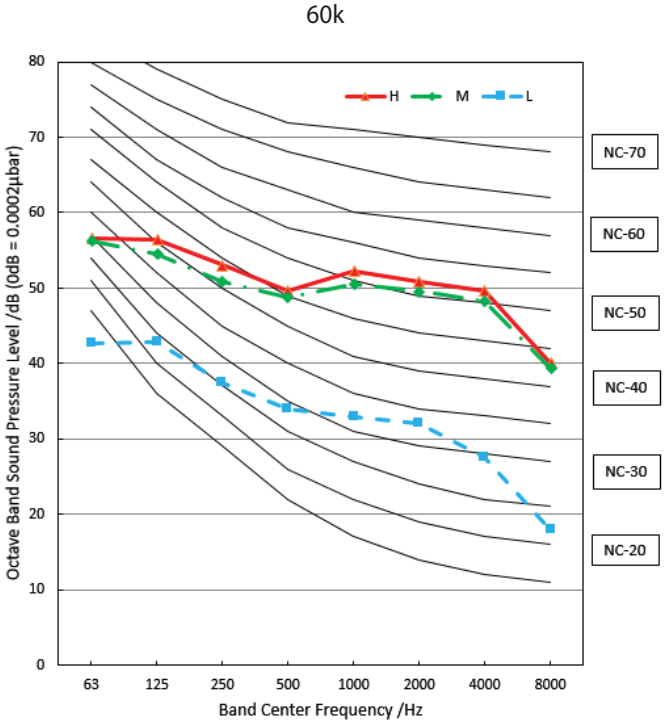

Fig. 12 – Sound Pressure In Octave Bands 24K, 36K, 60K

FAN PERFORMANCE

18k

Vertical, Horizontal Right, Horizontal Left

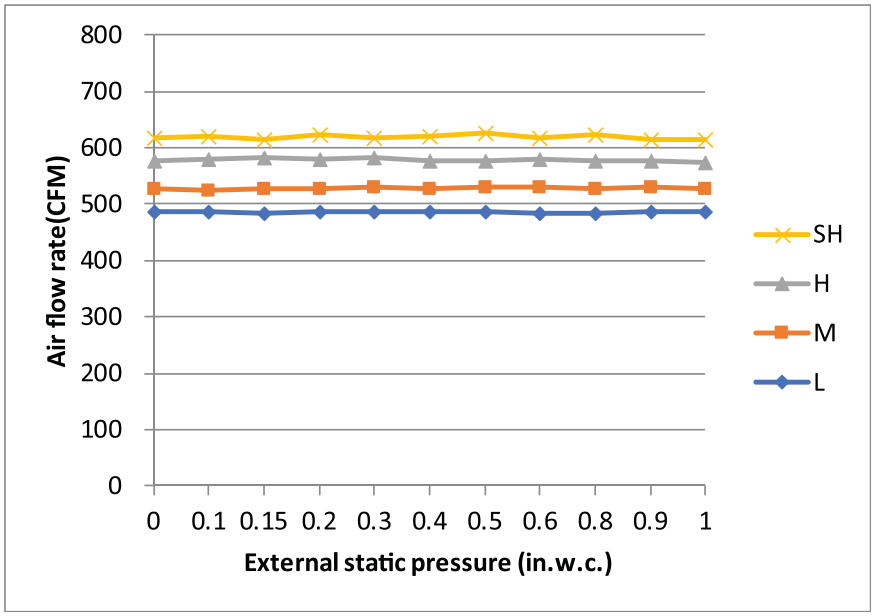

Use the remote controller

1.Indoor unit need to turn off for 5 minutes then power on(all of setting need to finish within 10 minutes)

2.Keep push for 7 seconds with ON/OFF and FAN SPEED together to get in Engineer mode

3.Choose channel 23(for cooling) and 25(for heating) with UP and Down button

4.After choose channel 23 or 25 then keep push ON/OFF for 2 seconds to select -41, -40,……, -1, 0, 1,2,3……19 20(reference the matrix list to identify the relative CFM)

5.Push the button OK to confirm the adjustment value,the display board will display with CS mean success(for setting),then disconnect power after 5 seconds

Cooling	Default	-1	-2	-3	-4	-5	-6	-7
Turbo	618	598	578	558	538	518	498	478
High	576	556	536	516	496	476	456	436
Medium	529	509	489	469	449	429	418	418
Low	488	468	448	428	408	400	400	400
Cooling	Default	-8	-9 ~ -41	+1	+2	+3	+4	+5 ~ +20
Turbo	618	458	453	635	635	635	635	635
High	576	435	435	596	616	618	618	618
Medium	529	418	418	549	569	589	600	600
Low	488	400	400	508	528	548	568	582

Heating	Default	-1	-2	-3	-4	-5	-6 ~ -41	+1	+2
Turbo	565	545	525	505	485	465	453	585	605
High	541	521	501	481	461	441	435	561	581
Medium	435	418	418	418	418	418	418	455	475
Low	400	400	400	400	400	400	400	420	440
Heating	Default	+3	+4	+5	+6	+7	+8	+9	+10~+20
Turbo	565	625	635	635	635	635	635	635	635
High	541	601	618	618	618	618	618	618	618
Medium	435	495	515	535	555	575	595	600	600
Low	400	460	480	500	520	540	560	580	582

Fig. 13 — Fan Performance 18K

Manufacturer reserves the right to change, at any time, specifications and designs without notice and without obligations.

24k

Vertical, Horizontal Right, Horizontal Left

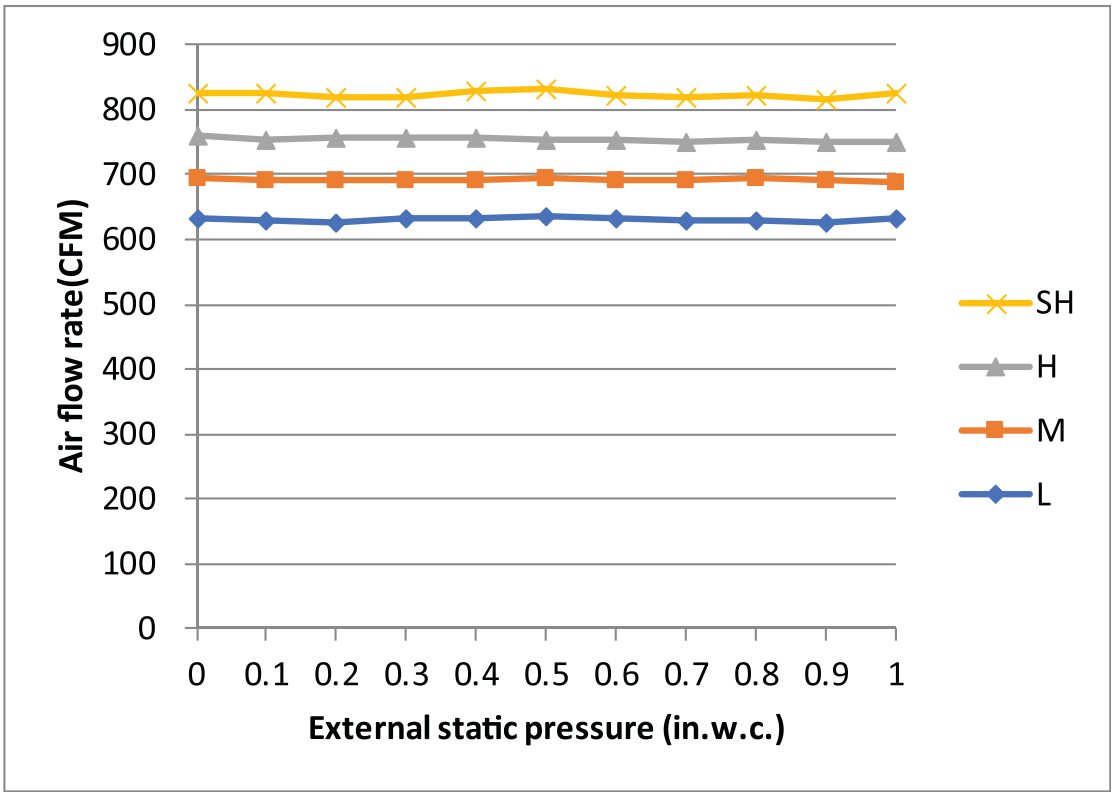

Use the remote controller

1.Indoor unit need to turn off for 5 minutes then power on(all of setting need to finish within 10 minutes)

2.Keep push for 7 seconds with ON/OFF and FAN SPEED together to get in Engineer mode

3.Choose channel 23(for cooling) and 25(for heating) with UP and Down button

4.After choose channel 23 or 25 then keep push ON/OFF for 2 seconds to select -41, -40,……, -1, 0, 1,2,3……19 20(reference the matrix list to identify the relative CFM)

5.Push the button OK to confirm the adjustment value,the display board will display with CS mean success(for setting),then disconnect power after 5 seconds

Cooling	Default	-1	-2	-3	-4	-5	-6	-7	-8	-9	-10
Turbo	824	804	784	764	744	724	704	684	664	644	624
High	759	739	719	699	679	659	639	619	599	579	559
Medium	694	674	654	634	614	594	574	554	534	514	494
Low	629	609	589	569	549	529	509	489	469	449	429
Cooling	Default	-11	-12	-13	-14	-15	-16	-17	-18	-19~-41	+1
Turbo	824	604	584	564	544	524	504	484	464	453	844
High	759	539	519	499	479	459	439	435	435	435	779
Medium	694	474	454	434	418	418	418	418	418	418	714
Low	629	409	400	400	400	400	400	400	400	400	649
Cooling	Default	+2	+3	+4	+5	+6	+7	+8	+9~+20		
Turbo	824	853	853	853	853	853	853	853	853		
High	759	799	819	835	835	835	835	835	835		
Medium	694	734	754	774	794	814	818	818	818		
Low	629	669	689	709	729	749	769	789	800		

Fig. 14 — Fan Performance 24K

Heating	Default	-1	-2	-3	-4	-5	-6	-7	-8	-9	-10	-11
Turbo	788	768	748	728	708	688	668	648	628	608	588	568
High	753	733	713	693	673	653	633	613	593	573	553	533
Medium	641	621	601	581	561	541	521	501	481	461	441	421
Low	524	504	484	464	444	424	404	400	400	400	400	400
Heating	Default	-12	-13	-14	-15	-16	-17~-41	+1	+2	+3	+4	+5
Turbo	788	548	528	508	488	468	453	808	828	848	853	853
High	753	513	493	473	453	435	435	773	793	813	833	835
Medium	641	418	418	418	418	418	418	661	681	701	721	741
Low	524	400	400	400	400	400	400	544	564	584	604	624
Heating	Default	+6	+7	+8	+9	+10	+11	+12	+13	+14~+20		
Turbo	788	853	853	853	853	853	853	853	853	853		
High	753	835	835	835	835	835	835	835	835	835		
Medium	641	761	781	801	818	818	818	818	818	818		
Low	524	644	664	684	704	724	744	764	784	800		

Fig. 15 — Fan Performance 24K (Cont)

30k

Vertical, Horizontal Right, Horizontal Left

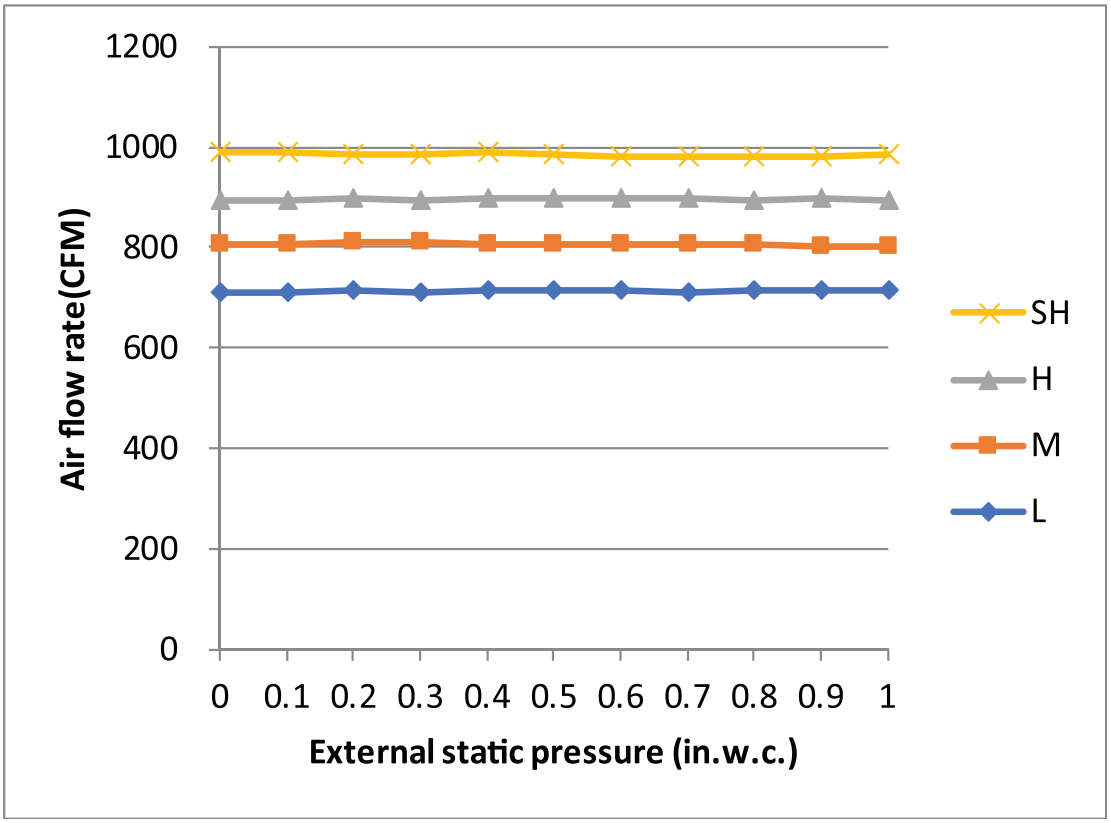

Use the remote controller

1.Indoor unit need to turn off for 5 minutes then power on(all of setting need to finish within 10 minutes)

2.Keep push for 7 seconds with ON/OFF and FAN SPEED together to get in Engineer mode

3.Choose channel 23(for cooling) and 25(for heating) with UP and Down button

4.After choose channel 23 or 25 then keep push ON/OFF for 2 seconds to select -41, -40,……, -1, 0, 1,2,3……19 20(reference the matrix list to identify the relative CFM)

5.Push the button OK to confirm the adjustment value,the display board will display with CS mean success(for setting),then disconnect power after 5 seconds

Cooling	Default	-1	-2	-3	-4	-5	-6	-7	-8	-9	-10	-11
Turbo	988	968	948	928	908	888	868	848	828	808	788	768
High	894	874	854	834	814	794	774	754	734	714	694	674
Medium	806	786	766	746	726	706	686	666	646	626	606	586
Low	712	692	672	652	632	612	592	572	552	532	512	492
Cooling	Default	-12	-13	-14	-15	-16	-17	-18	-19	-20	-21	-22
Turbo	988	748	728	708	688	668	648	628	608	588	568	548
High	894	654	634	614	594	574	554	534	514	494	474	454
Medium	806	566	546	526	506	486	466	446	426	418	418	418
Low	712	472	452	432	412	400	400	400	400	400	400	400
Cooling	Default	-23	-24	-25	-26	-27~-41	+1	+2	+3	+4	+5	+6
Turbo	988	528	508	488	468	453	1008	1028	1048	1068	1071	1071
High	894	435	435	435	435	435	914	934	954	974	994	1014
Medium	806	418	418	418	418	418	826	846	866	886	906	926
Low	712	400	400	400	400	400	732	752	772	792	812	832

Fig. 16 — Fan Performance 30K

Manufacturer reserves the right to change, at any time, specifications and designs without notice and without obligations.

Cooling	Default	+7	+8	+9	+10	+11	+12	+13	+14	+15	+16	+17~+20
Turbo	988	1071	1071	1071	1071	1071	1071	1071	1071	1071	1071	1071
High	894	1034	1053	1053	1053	1053	1053	1053	1053	1053	1053	1053
Medium	806	946	966	986	1006	1026	1035	1035	1035	1035	1035	1035
Low	712	852	872	892	912	932	952	972	992	1012	1018	1018

Heating	Default	-1	-2	-3	-4	-5	-6	-7	-8	-9	-10	-11
Turbo	988	968	948	928	908	888	868	848	828	808	788	768
High	894	874	854	834	814	794	774	754	734	714	694	674
Medium	806	786	766	746	726	706	686	666	646	626	606	586
Low	712	692	672	652	632	612	592	572	552	532	512	492
Heating	Default	-12	-13	-14	-15	-16	-17	-18	-19	-20	-21	-22
Turbo	988	748	728	708	688	668	648	628	608	588	568	548
High	894	654	634	614	594	574	554	534	514	494	474	454
Medium	806	566	546	526	506	486	466	446	426	418	418	418
Low	712	472	452	432	412	400	400	400	400	400	400	400
Heating	Default	-23	-24	-25	-26	-27~-41	+1	+2	+3	+4	+5	+6
Turbo	988	528	508	488	468	453	1008	1028	1048	1068	1071	1071
High	894	435	435	435	435	435	914	934	954	974	994	1014
Medium	806	418	418	418	418	418	826	846	866	886	906	926
Low	712	400	400	400	400	400	732	752	772	792	812	832
Heating	Default	+7	+8	+9	+10	+11	+12	+13	+14	+15	+16	+17~+20
Turbo	988	1071	1071	1071	1071	1071	1071	1071	1071	1071	1071	1071
High	894	1034	1053	1053	1053	1053	1053	1053	1053	1053	1053	1053
Medium	806	946	966	986	1006	1026	1035	1035	1035	1035	1035	1035
Low	712	852	872	892	912	932	952	972	992	1012	1018	1018

Fig. 17 — Fan Performance 30K (Cont)

36k

Vertical, Horizontal Right, Horizontal Left

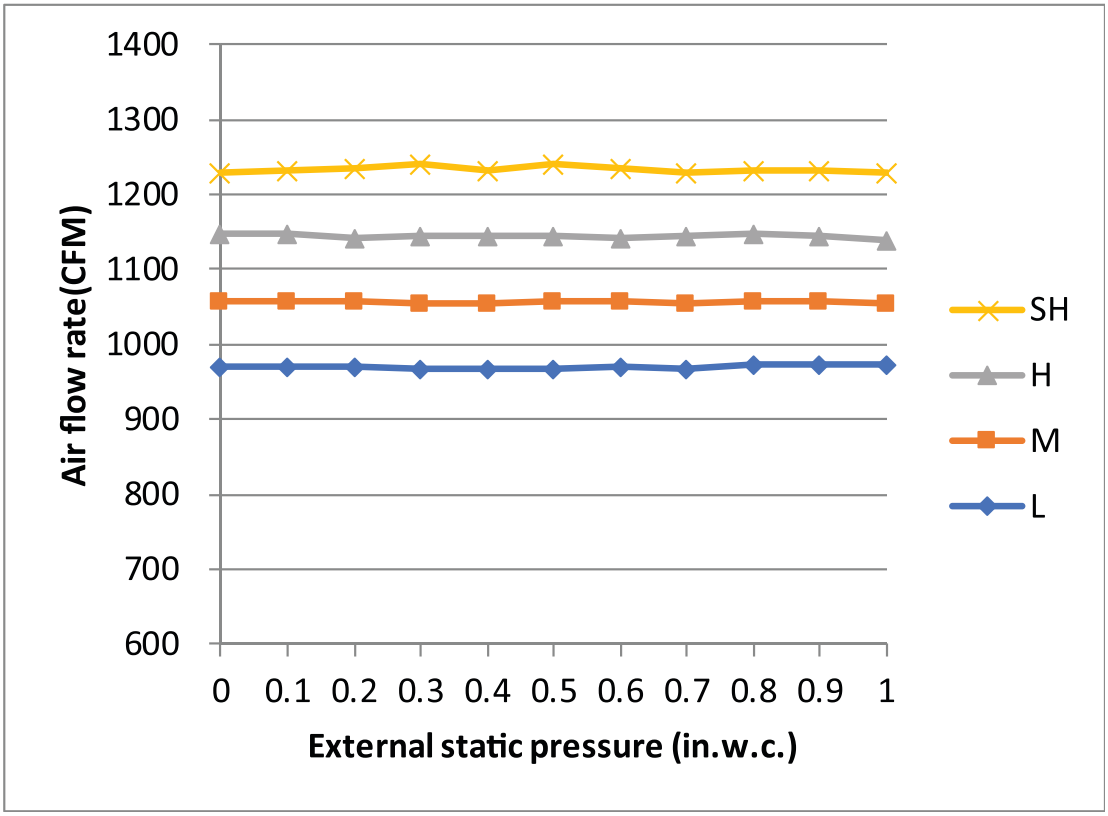

Use the remote controller

1.Indoor unit need to turn off for 5 minutes then power on(all of setting need to finish within 10 minutes)

2.Keep push for 7 seconds with ON/OFF and FAN SPEED together to get in Engineer mode

3.Choose channel 23(for cooling) and 25(for heating) with UP and Down button

4.After choose channel 23 or 25 then keep push ON/OFF for 2 seconds to select -41, -40,……, -1, 0, 1,2,3……19 20(reference the matrix list to identify the relative CFM)

5.Push the button OK to confirm the adjustment value,the display board will display with CS mean success(for setting),then disconnect power after 5 seconds

Cooling	Default	-1	-2	-3	-4	-5	-6	-7	-8	-9	-10	-11	-12
Turbo	1235	1215	1195	1175	1155	1135	1115	1095	1075	1055	1035	1015	995
High	1147	1127	1107	1087	1067	1047	1027	1007	987	967	947	927	907
Medium	1059	1039	1019	999	979	959	939	919	899	879	859	839	819
Low	971	951	931	911	891	871	851	831	811	791	771	751	731
Cooling	Default	-13	-14	-15	-16	-17	-18	-19	-20	-21	-22	-23	-24
Turbo	1235	975	955	935	915	895	875	855	835	815	795	775	755
High	1147	887	867	847	827	807	787	767	747	727	707	687	667
Medium	1059	799	779	759	739	719	699	679	659	639	619	599	579
Low	971	711	691	671	651	631	611	591	571	551	531	511	491
Cooling	Default	-25	-26	-27	-28	-29	-30	-31	-32	-33	-34	-35	-36
Turbo	1235	735	715	695	675	655	635	615	595	575	555	535	515
High	1147	647	627	607	587	567	547	527	507	487	467	447	435
Medium	1059	559	539	519	499	479	459	439	419	418	418	418	418
Low	971	471	451	431	411	400	400	400	400	400	400	400	400

Fig. 18 — Fan Performance 36K

Manufacturer reserves the right to change, at any time, specifications and designs without notice and without obligations.

Cooling	Default	-37	-38	-39	- 4 0 ~ - 41	+1	+2	+3	+4	+4	+5	+6	+7
Turbo	1235	495	475	455	453	1255	1275	1288	1288	1288	1288	1288	1288
High	1147	435	435	435	435	1167	1187	1207	1227	1247	1267	1271	1271
Medium	1059	418	418	418	418	1079	1099	1119	1139	1159	1179	1199	1191
Low	971	400	400	400	400	991	1011	1031	1051	1071	1091	1111	1085
Cooling	Default	+8	+9	+10	+11	+12	+13	+14~+20					
Turbo	1235	1288	1288	1288	1288	1288	1288	1288					
High	1147	1271	1271	1271	1271	1271	1271	1271					
Medium	1059	1219	1239	1253	1253	1253	1253	1253					
Low	971	1131	1151	1171	1191	1211	1231	1235					

Heating	Default	-1	-2	-3	-4	-5	-6	-7	-8	-9	-10	-11	-12
Turbo	1235	1215	1195	1175	1155	1135	1115	1095	1075	1055	1035	1015	995
High	1147	1127	1107	1087	1067	1047	1027	1007	987	967	947	927	907
Medium	1059	1039	1019	999	979	959	939	919	899	879	859	839	819
Low	971	951	931	911	891	871	851	831	811	791	771	751	731
Heating	Default	-13	-14	-15	-16	-17	-18	-19	-20	-21	-22	-23	-24
Turbo	1235	975	955	935	915	895	875	855	835	815	795	775	755
High	1147	887	867	847	827	807	787	767	747	727	707	687	667
Medium	1059	799	779	759	739	719	699	679	659	639	619	599	579
Low	971	711	691	671	651	631	611	591	571	551	531	511	491
Heating	Default	-25	-26	-27	-28	-29	-30	-31	-32	-33	-34	-35	-36
Turbo	1235	735	715	695	675	655	635	615	595	575	555	535	515
High	1147	647	627	607	587	567	547	527	507	487	467	447	435
Medium	1059	559	539	519	499	479	459	439	419	418	418	418	418
Low	971	471	451	431	411	400	400	400	400	400	400	400	400
Heating	Default	-37	-38	-39	- 4 0 ~ - 41	+1	+2	+3	+4	+4	+5	+6	+7
Turbo	1235	495	475	455	453	1255	1275	1288	1288	1288	1288	1288	1288
High	1147	435	435	435	435	1167	1187	1207	1227	1247	1267	1271	1271
Medium	1059	418	418	418	418	1079	1099	1119	1139	1159	1179	1199	1191
Low	971	400	400	400	400	991	1011	1031	1051	1071	1091	1111	1085
Heating	Default	+8	+9	+10	+11	+12	+13	+14~+20					
Turbo	1235	1288	1288	1288	1288	1288	1288	1288					
High	1147	1271	1271	1271	1271	1271	1271	1271					
Medium	1059	1219	1239	1253	1253	1253	1253	1253					
Low	971	1131	1151	1171	1191	1211	1231	1235					

Fig. 19 — Fan Performance 36K (Cont)

48k

Vertical, Horizontal Right, Horizontal Left

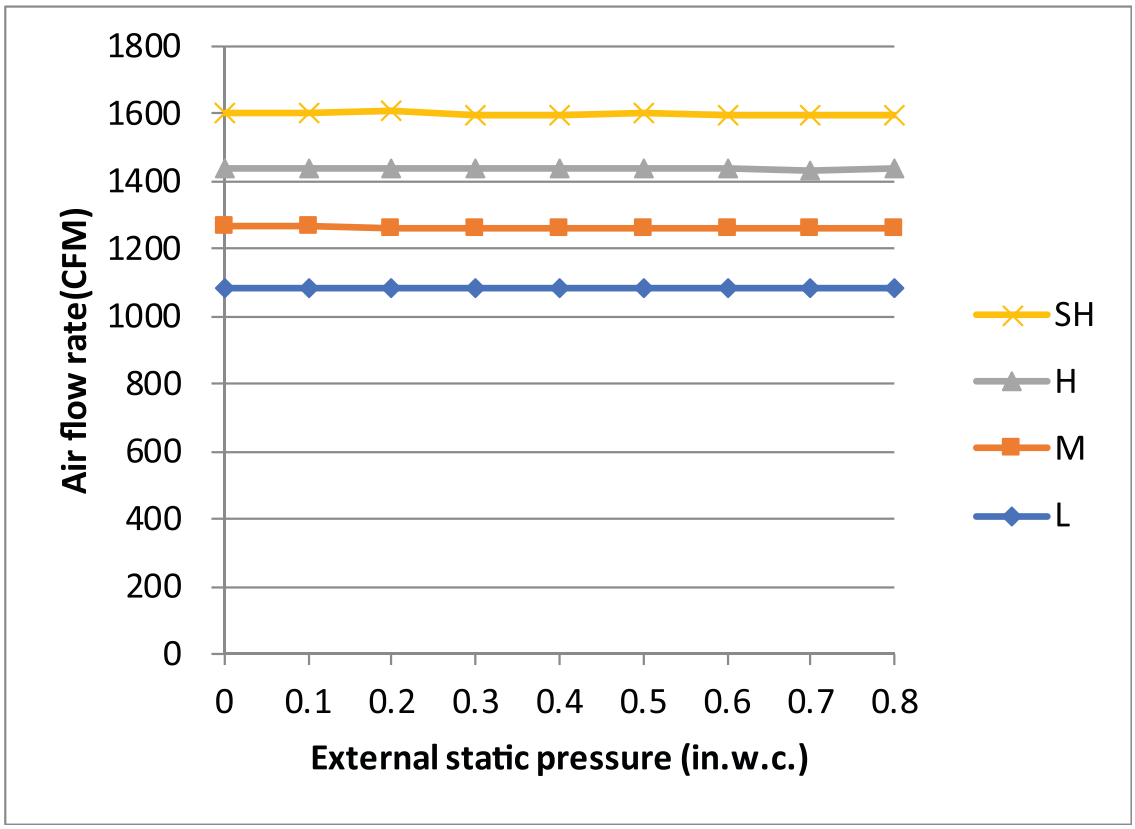

Use the remote controller

1.Indoor unit need to turn off for 5 minutes then power on(all of setting need to finish within 10 minutes)

2.Keep push for 7 seconds with ON/OFF and FAN SPEED together to get in Engineer mode

3.Choose channel 23(for cooling) and 25(for heating) with UP and Down button

4.After choose channel 23 or 25 then keep push ON/OFF for 2 seconds to select -41, -40,……, -1, 0, 1,2,3……19 20(reference the matrix list to identify the relative CFM)

5.Push the button OK to confirm the adjustment value,the display board will display with CS mean success(for setting),then disconnect power after 5 seconds

Cooling	Default	-1	-2	-3	-4	-5	-6	-7	-8	-9	-10
Turbo	1600	1580	1560	1540	1520	1500	1480	1460	1440	1420	1400
High	1441	1421	1401	1381	1361	1341	1321	1301	1281	1261	1241
Medium	1265	1245	1225	1205	1185	1165	1145	1125	1105	1085	1065
Low	1088	1068	1048	1028	1008	988	968	948	928	908	888
Cooling	Default	-11	-12	-13	-14	-15	-16	-17	-18	-19	-20
Turbo	1600	1380	1360	1340	1320	1300	1280	1260	1240	1220	1200
High	1441	1221	1201	1181	1161	1141	1121	1101	1081	1061	1041
Medium	1265	1045	1025	1005	985	965	945	925	905	885	865
Low	1088	868	848	828	808	788	768	748	728	708	694
Cooling	Default	-21	-22	-23	-24	-25	-26	-27	-28	-29	-30
Turbo	1600	1180	1160	1140	1120	1100	1080	1060	1040	1020	1000
High	1441	1021	1001	981	961	941	921	901	881	861	841
Medium	1265	845	825	805	785	765	745	725	712	712	712
Low	1088	694	694	694	694	694	694	694	694	694	694

Fig. 20 — Fan Performance 48K

Cooling	Default	-31	-32	-33	-34	-35	-36	-37	-38	-39	-40	-41
Turbo	1600	980	960	940	920	900	880	860	840	820	800	780
High	1441	821	801	781	761	741	729	729	729	729	729	
Medium	1265	712	712	712	712	712	712	712	712	712	712	
Low	1088	694	694	694	694	694	694	694	694	694	694	
Cooling	Default	+1	+2	+3	+4	+5	+6	+7	+8	+9	+10	
Turbo	1600	1620	1640	1660	1680	1700	1720	1724	1724	1724	1724	
High	1441	1461	1481	1501	1521	1541	1561	1581	1601	1621	1641	
Medium	1265	1285	1305	1325	1345	1365	1385	1405	1425	1445	1465	
Low	1088	1108	1128	1148	1168	1188	1208	1228	1248	1268	1288	
Cooling	Default	+11	+12	+13	+14	+15	+16	+17	+18	+19	+20	
Turbo	1600	1724	1724	1724	1724	1724	1724	1724	1724	1724	1724	
High	1441	1661	1681	1701	1706	1706	1706	1706	1706	1706	1706	
Medium	1265	1485	1505	1525	1545	1565	1585	1605	1625	1645	1665	
Low	1088	1308	1328	1348	1368	1388	1408	1428	1448	1468	1488	

Heating	Default	-1	-2	-3	-4	-5	-6	-7	-8	-9	-10
Turbo	1471	1451	1431	1411	1391	1371	1351	1331	1311	1291	1271
High	1324	1304	1284	1264	1244	1224	1204	1184	1164	1144	1124
Medium	1147	1127	1107	1087	1067	1047	1027	1007	987	967	947
Low	971	951	931	911	891	871	851	831	811	791	771
Heating	Default	-11	-12	-13	-14	-15	-16	-17	-18	-19	-20
Turbo	1471	1251	1231	1211	1191	1171	1151	1131	1111	1091	1071
High	1324	1104	1084	1064	1044	1024	1004	984	964	944	924
Medium	1147	927	907	887	867	847	827	807	787	767	747
Low	971	751	731	711	694	694	694	694	694	694	694
Heating	Default	-21	-22	-23	-24	-25	-26	-27	-28	-29	-30
Turbo	1471	1051	1031	1011	991	971	951	931	911	891	871
High	1324	904	884	864	844	824	804	784	764	744	729
Medium	1147	727	712	712	712	712	712	712	712	712	712
Low	971	694	694	694	694	694	694	694	694	694	694
Heating	Default	-31	-32	-33	-34	-35	-36	-37	-38	-39	-40~-41
Turbo	1471	851	831	811	791	771	751	747	747	747	747
High	1324	729	729	729	729	729	729	729	729	729	729
Medium	1147	712	712	712	712	712	712	712	712	712	712
Low	971	694	694	694	694	694	694	694	694	694	694
Heating	Default	+1	+2	+3	+4	+5	+6	+7	+8	+9	+10
Turbo	1471	1491	1511	1531	1551	1571	1591	1611	1631	1651	1671
High	1324	1344	1364	1384	1404	1424	1444	1464	1484	1504	1524
Medium	1147	1167	1187	1207	1227	1247	1267	1287	1307	1327	1347
Low	971	991	1011	1031	1051	1071	1091	1111	1131	1151	1171
Heating	Default	+11	+12	+13	+14	+15	+16	+17	+18	+19	+20
Turbo	1471	1691	1711	1724	1724	1724	1724	1724	1724	1724	1724
High	1324	1544	1564	1584	1604	1624	1644	1664	1684	1704	1706
Medium	1147	1367	1387	1407	1427	1447	1467	1487	1507	1527	1547
Low	971	1191	1211	1231	1251	1271	1291	1311	1331	1351	1371

Fig. 21 — Fan Performance 48K (Cont)

60k

Vertical, Horizontal Right, Horizontal Left

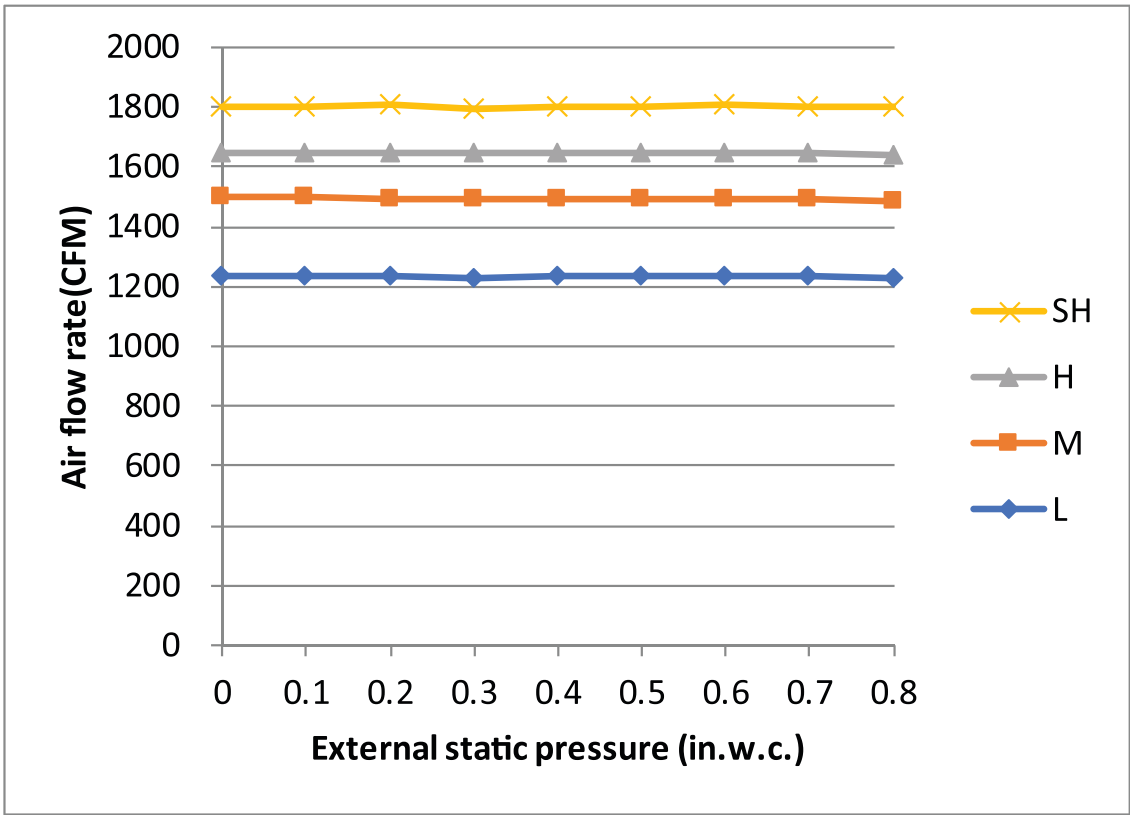

Use the remote controller

1.Indoor unit need to turn off for 5 minutes then power on(all of setting need to finish within 10 minutes)

2.Keep push for 7 seconds with ON/OFF and FAN SPEED together to get in Engineer mode

3.Choose channel 23(for cooling) and 25(for heating) with UP and Down button

4.After choose channel 23 or 25 then keep push ON/OFF for 2 seconds to select -41, -40,……, -1, 0, 1,2,3……19 20(reference the matrix list to identify the relative CFM)

5.Push the button OK to confirm the adjustment value,the display board will display with CS mean success(for setting),then disconnect power after 5 seconds

Cooling	Default	-1	-2	-3	-4	-5	-6	-7	-8	-9	-10
Turbo	1800	1780	1760	1740	1720	1700	1680	1660	1640	1620	1600
High	1647	1627	1607	1587	1567	1547	1527	1507	1487	1467	1447
Medium	1500	1480	1460	1440	1420	1400	1380	1360	1340	1320	1300
Low	1235	1215	1195	1175	1155	1135	1115	1095	1075	1055	1035
Cooling	Default	-11	-12	-13	-14	-15	-16	-17	-18	-19	-20
Turbo	1800	1580	1560	1540	1520	1500	1480	1460	1440	1420	1400
High	1647	1427	1407	1387	1367	1347	1327	1307	1287	1267	1247
Medium	1500	1280	1260	1240	1220	1200	1180	1160	1140	1120	1100
Low	1235	1015	995	975	955	935	915	895	875	855	835
Cooling	Default	-21	-22	-23	-24	-25	-26	-27	-28	-29	-30
Turbo	1800	1380	1360	1340	1320	1300	1280	1260	1240	1220	1200
High	1647	1227	1207	1187	1167	1147	1127	1107	1087	1067	1047
Medium	1500	1080	1060	1040	1020	1000	980	960	940	920	900
Low	1235	815	795	775	755	735	715	695	694	694	694

Fig. 22 —Fan Performance 60K

Manufacturer reserves the right to change, at any time, specifications and designs without notice and without obligations.

Cooling	Default	-31	-32	-33	-34	-35	-36	-37	-38	-39	-40	-41
Turbo	1800	1180	1160	1140	1120	1100	1080	1060	1040	1020	1000	980
High	1647	1027	1007	987	967	947	927	907	887	867	847	827
Medium	1500	880	860	840	820	800	780	760	740	720	712	
Low	1235	694	694	694	694	694	694	694	694	694	694	
Cooling	Default	+1	+2	+3	+4	+5	+6	+7	+8	+9	+10	
Turbo	1800	1820	1840	1860	1880	1900	1920	1940	1960	1980	2000	
High	1647	1667	1687	1707	1727	1747	1767	1787	1807	1827	1847	
Medium	1500	1520	1540	1560	1580	1600	1620	1640	1660	1680	1700	
Low	1235	1255	1275	1295	1315	1335	1355	1375	1395	1415	1435	
Cooling	Default	+11	+12	+13	+14	+15	+16	+17	+18	+19	+20	
Turbo	1800	2020	2040	2060	2080	2100	2120	2140	2153	2153	2153	
High	1647	1867	1887	1907	1927	1947	1967	1987	2007	2027	2047	
Medium	1500	1720	1740	1760	1780	1800	1820	1840	1860	1880	1900	
Low	1235	1455	1475	1495	1515	1535	1555	1575	1595	1615	1635	

Heating	Default	-1	-2	-3	-4	-5	-6	-7	-8	-9	-10
Turbo	1682	1662	1642	1622	1602	1582	1562	1542	1522	1502	1482
High	1582	1562	1542	1522	1502	1482	1462	1442	1422	1402	1382
Medium	1359	1339	1319	1299	1279	1259	1239	1219	1199	1179	1159
Low	1047	1027	1007	987	967	947	927	907	887	867	847
Heating	Default	-11	-12	-13	-14	-15	-16	-17	-18	-19	-20
Turbo	1682	1462	1442	1422	1402	1382	1362	1342	1322	1302	1282
High	1582	1362	1342	1322	1302	1282	1262	1242	1222	1202	1182
Medium	1359	1139	1119	1099	1079	1059	1039	1019	999	979	959
Low	1047	827	807	787	767	747	727	707	694	694	694
Heating	Default	-21	-22	-23	-24	-25	-26	-27	-28	-29	-30
Turbo	1682	1262	1242	1222	1202	1182	1162	1142	1122	1102	1082
High	1582	1162	1142	1122	1102	1082	1062	1042	1022	1002	982
Medium	1359	939	919	899	879	859	839	819	799	779	759
Low	1047	694	694	694	694	694	694	694	694	694	694
Heating	Default	-31	-32	-33	-34	-35	-36	-37	-38	-39	-40
Turbo	1682	1062	1042	1022	1002	982	962	942	922	902	882
High	1582	962	942	922	902	882	862	842	822	802	782
Medium	1359	739	719	712	712	712	712	712	712	712	712
Low	1047	694	694	694	694	694	694	694	694	694	694
Heating	Default	+1	+2	+3	+4	+5	+6	+7	+8	+9	+10
Turbo	1682	1702	1722	1742	1762	1782	1802	1822	1842	1862	1882
High	1582	1602	1622	1642	1662	1682	1702	1722	1742	1762	1782
Medium	1359	1379	1399	1419	1439	1459	1479	1499	1519	1539	1559
Low	1047	1067	1087	1107	1127	1147	1167	1187	1207	1227	1247
Heating	Default	+11	+12	+13	+14	+15	+16	+17	+18	+19	+20
Turbo	1682	1902	1922	1942	1962	1982	2002	2022	2042	2062	2082
High	1582	1802	1822	1842	1862	1882	1902	1922	1942	1962	1982
Medium	1359	1579	1599	1619	1639	1659	1679	1699	1719	1739	1759
Low	1047	1267	1287	1307	1327	1347	1367	1387	1407	1427	1447

Fig. 23 —Fan Performance 60K (Cont)

FAN AND MOTOR SPECIFICATIONS

Table 10 — Fan and Motor Specifications

SIZE			24K (18K)	36K (30K)	60K (48K)
INDOOR FAN	Material		Galvanized sheet	Galvanized sheet	Galvanized sheet
	Type		FLBJ-318*183*103-47N-1	FLBJ-318*234*103-47N-1	FLBJ-318*325*144-47N-1
	Diameter	inch (mm)	12.5 (318)	12.5 (318)	12.5 (318)
	Height	inch (mm)	7.2 (183)	9.2 (234)	12.8 (325)
INDOOR FAN MOTOR	Model		ZKFW-600-10-1	ZKFW-600-10-1	ZKFW-1000-10-1
	Volts	V	208/230	208/230	208/230
	Type		DC	DC	DC
	Phase		3	3	3
	FLA		2.5	4.5	8
	Insulation class		F	F	F
	Safe class		IP20	IP20	IP20
	Input	W	197	334	625
	Output	W	147.8	250.5	468.8
	Range of current	Amps	0.51~1.98	0.93~3.26	1.24~5.37
	Rated current	Amps	1.36	2.38	4.15
	Rated HP	HP	0.20	0.34	0.63
	Speed High/Medium/Low	rev/min	903/872/842/816	970/929/889/852	1136/1073/1014/919
	Rated RPM	rev/min	903	970	1,136
	Max. input	W	292	477	833

Manufacturer reserves the right to change, at any time, specifications and designs without notice and without obligations.

WIRING DIAGRAMS

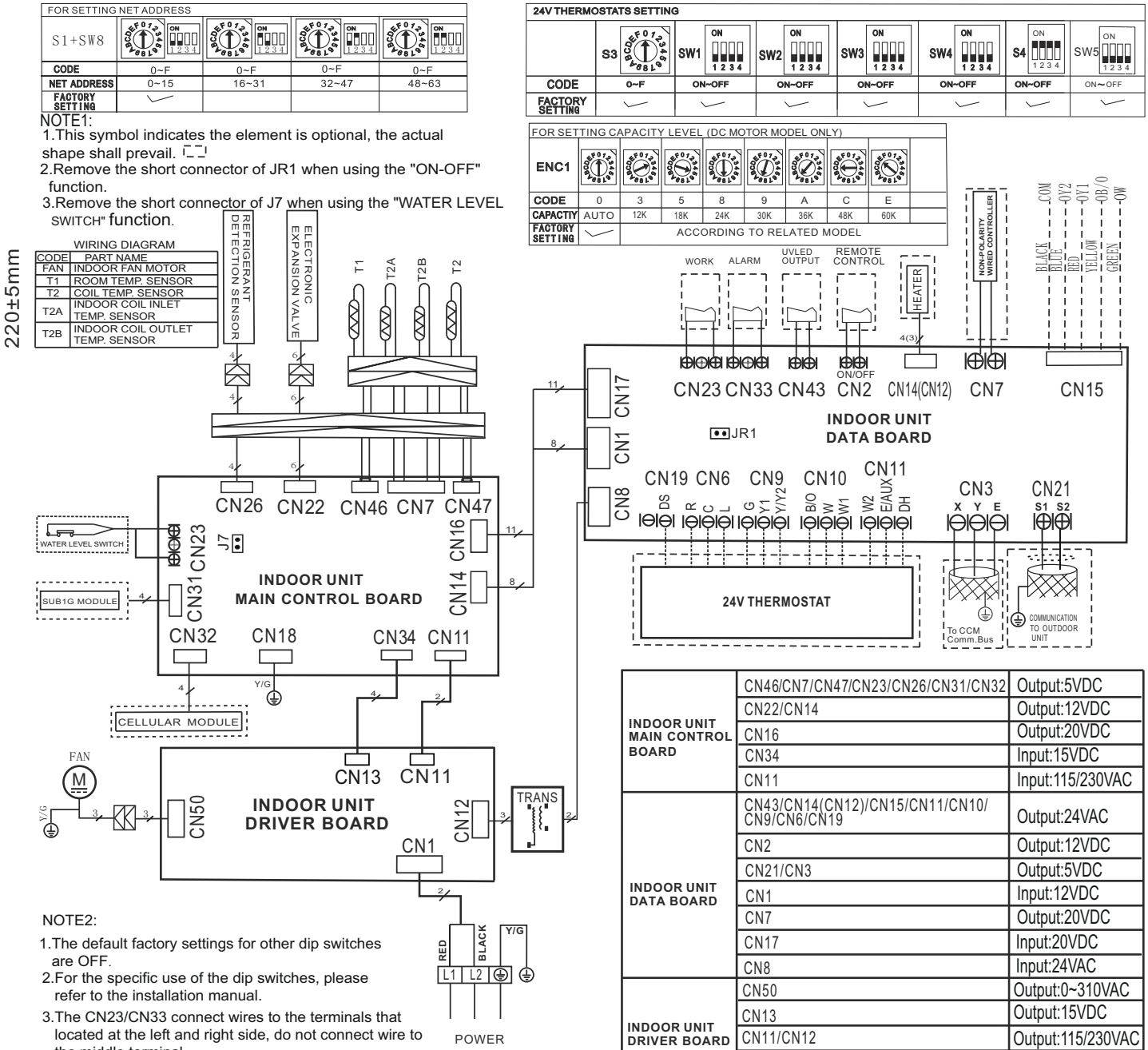

NOTE1:

1.This symbol indicates the element is optional, the actual shape shall prevail.

2.Remove the short connector of JR1 when using the "ON-OFF" function.

3.Remove the short connector of J7 when using the "WATER LEVEL SWITCH" function.

NOTE2:

1.The default factory settings for other dip switches are OFF.

2.For the specific use of the dip switches, please refer to the installation manual.

3.The CN23/CN33 connect wires to the terminals that located at the left and right side, do not connect wire to the middle terminal.

4.Terminal block wiring. When using 208V or 230V, connect L1 and L2. When using 115V, connect L1 and L2 (L2 is used as N).

INDOOR UNIT MAIN CONTROL BOARD	CN46/CN7/CN47/CN23/CN26/CN31/CN32	Output:5VDC
	CN22/CN14	Output:12VDC
	CN16	Output:20VDC
	CN34	Input:15VDC
	CN11	Input:115/230VAC
INDOOR UNIT DATA BOARD	CN43/CN14(CN12)/CN15/CN11/CN10/ CN9/CN6/CN19	Output:24VAC
	CN2	Output:12VDC
	CN21/CN3	Output:5VDC
	CN1	Input:12VDC
	CN7	Output:20VDC
	CN17	Input:20VDC
	CN8	Input:24VAC
INDOOR UNIT DRIVER BOARD	CN50	Output:0~310VAC
	CN13	Output:15VDC
	CN11/CN12	Output:115/230VAC
	CN1	Input:115/230VAC

Fig. 23 — Wiring Diagram (For All Sizes)

TROUBLESHOOTING

Table 11 — Error Codes

DISPLAY	MALFUNCTION AND PROTECTION INDICATION
EC07	ODU fan speed out of control
EC0d	ODU malfunction
EC51	ODU EEPROM parameter error
EC52	ODU coil temp sensor error
EC53	ODU ambient temp sensor error
EC54	COMP. discharge temp sensor error
EC56	IDU coil outlet temp sensor error
ECC1	Other IDU refrigerant sensor detects leakage (multi-zone)
EH00	IDU EEPROM malfunction
EH03	IDU fan speed out of control
EH0A	IDU EEPROM parameter error
EH0b	IDU main control and display boards communication error
EH0E	Water-level alarm malfunction
EH3A	External fan DC bus voltage is too low protection
EH3b	External fan DC bus voltage is too high fault
EH60	IDU room temp. sensor (T1) error
EH61	IDU coil temp. sensor (T2) error
EH62/EH66	Evaporator coil inlet temp. sensor (T2B) is in open circuit or short circuit
EH65	Evaporator coil inlet temp. sensor (T2A) is in open circuit or short circuit
EHbA	Communication error between indoor unit and external fan module
EHb3	Communication malfunction between wire and master control
EHC1	Refrigerant sensor detects leakage
EHC2	Refrigerant sensor is out of range and leakage is detected
EHC3	Refrigerant sensor is out of range
EL01	IDU & ODU communication error
EL0C	System lacks refrigerant
EL16	Communication malfunction between adapter board and outdoor main board
FHCC	Refrigerant sensor error
FL09	Mismatch between the new and old platforms
PC00	ODU IPM module protection
PC01	ODU voltage protection
PC02	Compressor top (or IPM) temp. protection
PC03	Pressure protection (low or high pressure)
PC04	Inverter compressor drive error
PC0L	Low ambient temp. protection
----	IDUs mode conflict
NOTE: The digital tube will show DF in defrost mode and FC in forced cooling mode. DF and FC are not error codes.	

Table 12 — Refrigerant Leak Detection Error Codes

EHC1	Refrigerant Sensor detects a leak
EHC2	Working condition of the refrigerant sensor is out of range and a leak is detected

If **you receive one of the codes in Table 12, call a technician as soon as possible. No need to panic, the unit goes into TURBO mode until the error code clears. There is a "beeping" noise coming from the indoor unit, which is normal in this case.**

For additional diagnostic information, refer to the Service Manual.

GUIDE SPECIFICATIONS

INDOOR AIR HANDLER DUCTLESS SYSTEMS

Size Range: 2 to 5 Ton Nominal Cooling and Heating Capacity Model Number: **D5FUHA**

Part 1 - GENERAL

1.01 System Description

Indoor, air handler, direct-expansion fan coils are matched with a heat pump outdoor unit.

1.02 Agency Listings

Unit is rated per AHRI Standards 210/240 and listed in the AHRI directory as a matched system.

1.03 Delivery, Storage, And Handling

Units are stored and handled per the unit manufacturer's recommendations.

1.04 Warranty (For Inclusion By Specifying Engineer)

Part 2 - PRODUCTS

2.01 Equipment

A. General:

Indoor, direct-expansion, ceiling-mounted fan coil. The unit is complete with cooling/heating coil, fan, fan motor, piping connectors, electrical controls, microprocessor control system, and integral temperature sensing.

B. Unit Cabinet:

Unit cabinet is constructed of galvanized steel. The cabinet is fully insulated for improved thermal and acoustic performance.

C. Fans:

The fan is the tangential direct-drive blower type with air intake at the rear or bottom of the unit and discharge at the front.

D. Coil:

The coil is a copper tube with aluminum fins and galvanized steel tube sheets. The fins are bonded to the tubes by mechanical expansion and specially hydrophilic pre-coated for enhanced wet-ability. A drip pan under the coil has a factory installed condensate pump and drain connection for hose attachment to remove condensate.

E. Motors:

The motors have an open drip-proof, permanently lubricated ball bearing with inherent overload protection. Fan motors are 3-speed.

F. Controls:

The controls consist of a microprocessor-based control system which controls the space temperature, determines optimum fan speed, and runs self diagnostics. The temperature control range is 62°F to 86°F (17°C to 30°C) in increments of 1°F or 1°C, and has a 46°F **HEATING** mode (**HEATING** setback). The wireless remote controller can serve as the temperature sensing location for room comfort.

The unit has the following functions (at a minimum):

1. An automatic restart, after a power failure, which sets the unit back to the same operating conditions it operated under at time of failure.
2. A timer function to provide a minimum 24−hour timer cycle for system Auto Start/Stop.
3. Temperature−sensing controls sense return air temperature.
4. Indoor coil freeze protection.
5. Wireless infrared remote controller to enter set points and operating conditions.
6. **DEHUMIDIFICATION** mode provides increased latent removal capability by modulating system operation and set point temperature.
7. **FAN−ONLY** operation to provide room air circulation when cooling is not required.
8. Diagnostics provide continuous checks of unit operation and warns of possible malfunctions. Error messages appear on the unit.
9. The fan speed control is user−selectable: high, medium, low, or microprocessor controlled automatic operation during all operating modes.
10. Automatic heating−to−cooling changeover in the **HEAT** pump mode. The control includes deadband to prevent rapid mode cycling between heating and cooling.
11. Indoor coil high temperature protection is provided to detect an excessive indoor discharge temperature when the unit is in the **HEAT** pump mode.

G. Electrical Requirements:

The indoor fan motor operates on 115V or 208-230V. Power is supplied from the indoor unit power supply.

H. Operating Characteristics:

The Air Handler system has a minimum SEER (Seasonal Energy Efficiency Ratio) and HSPF at AHRI conditions, as listed on the specifications table.

I. Refrigerant Lines:

All units have refrigerant lines that can be oriented to connect from the side of the unit. Both refrigerant lines must be insulated.

© 2026 Carrier. All rights reserved.

Manufacturer reserves the right to change, at any time, specifications and designs without notice and without obligations.