288BNV EVOLUTION® V
VARIABLE SPEED HEAT PUMP
WITH PURON® REFRIGERANT

bryant®

Installation Instructions

NOTE: Read the entire instruction manual before starting the installation.

TABLE OF CONTENTS

PAGE NO.

SAFETY CONSIDERATIONS 2
INSTALLATION RECOMMENDATIONS 2
INSTALLATION 3
Step 1 — Check Equipment and Job site 3
Step 2 — Install on Solid, Level Mounting Pad 3
Step 3 — Clearance Requirements 3
Step 4 — Operating Ambient 4
Step 5 — Elevate Unit 4
Step 7 — Making Piping Connections 4
Step 8 — Make Electrical Connections 6
Step 9 — Compressor Internal Crankcase Heater 8
Step 10 — Install Accessories 8
Step 11 — Start-Up 8
Step 12 — System Functions and Sequence of Operation 9
Step 13 — Check Charge 11
Step 14 — Pumpdown & Evacuation 14
MAJOR COMPONENTS 15
TROUBLESHOOTING 16
FINAL CHECKS 21
CARE AND MAINTENANCE 21
PURON® REFRIGERANT QUICK REFERENCE GUIDE 21

Information in these installation instructions pertains only to 288BNV series units.

SAFETY CONSIDERATIONS

Improper installation, adjustment, alteration, service, maintenance, or use can cause explosion, fire, electrical shock, or other conditions which may cause death, personal injury, or property damage. Consult a qualified installer, service agency, or your distributor or branch for information or assistance. The qualified installer or agency must use factory-authorized kits or accessories when modifying this product. Refer to the individual instructions packaged with the kits or accessories when installing.

Follow all safety codes. Wear safety glasses, protective clothing, and work gloves. Use quenching cloth for brazing operations. Have fire extinguisher available. Read these instructions thoroughly and follow all warnings or cautions included in literature and attached to the unit. Consult local building codes and current editions of the National Electrical Code (NEC) NFPA 70. In Canada, refer to current editions of the Canadian electrical code CSA 22.1.

Recognize safety information. This is the safety-alert symbol ⚠ When you see this symbol on the unit and in instructions or manuals, be alert to the potential for personal injury. Understand these signal words; DANGER, WARNING, and CAUTION. These words are used with the safety-alert symbol. DANGER identifies the most serious hazards which **will** result in severe personal injury or death. WARNING signifies hazards which **could** result in personal injury or death. CAUTION is used to identify unsafe practices which **would** result in minor personal injury or product and property damage. NOTE is used to highlight suggestions which **will** result in enhanced installation, reliability, or operation.

⚠ CAUTION

CUT HAZARD

Failure to follow this caution may result in personal injury.

Sheet metal parts may have sharp edges or burrs. Use care and wear appropriate protective clothing and gloves when handling parts.

⚠ WARNING

UNIT OPERATION AND SAFETY HAZARD

Failure to follow this warning could result in personal injury or equipment damage.

Puron® refrigerant systems operate at higher pressures than standard R-22 systems. Do not use R-22 service equipment or components on Puron® refrigerant equipment.

⚠ WARNING

ELECTRICAL SHOCK HAZARD

Failure to follow this warning could result in personal injury or death.

Before installing, modifying, or servicing system, main electrical disconnect switch must be in the OFF position. There may be more than 1 disconnect switch. Lock out and tag switch with a suitable warning label.

Indoor Thermostat Control Options

Model	Evolution® Connex™ Control	Standard HP Thermostat
288BNV	Yes*	Yes**

* Requires model SYSTXBBUITN01 or SYSTXBBUITW01 with version 11 . . . software or newer.

** Using standard HP thermostat limits functionality of system

⚠ WARNING

ELECTRICAL HAZARD - HIGH VOLTAGE!

Failure to follow this warning could result in personal injury or death.

Electrical components may hold charge. DO NOT remove control box cover for 2 minutes after power has been removed from unit.

PRIOR TO TOUCHING ELECTRICAL COMPONENTS:

Verify zero (0) voltage at inverter connections shown on inverter cover.

⚠ WARNING

EXPLOSION HAZARD

Failure to follow this warning could result in death, serious personal injury, and/or property damage.

Never use air or gases containing oxygen for leak testing or operating refrigerant compressors. Pressurized mixtures of air or gases containing oxygen can lead to an explosion.

Inverter Cover

IMPORTANT: The inverter cover should NEVER be removed because there is no reason to remove the inverter cover to access the inverter. The inverter has limited serviceability. Refer to Service Manual for details on field replaceable parts. A replacement cover is provided with a replacement inverter.

INSTALLATION RECOMMENDATIONS

In some cases noise in the living area has been traced to gas pulsations from improper installation of equipment.

1. Locate unit away from windows, patios, decks, etc. where unit operation sound may disturb customer.
2. In noise sensitive applications (such as bedrooms), when a lineset is mounted to ceiling joists or floor joists, the outdoor unit must be located at least 10 ft (3.05 m) away. If this is not possible, create a line set configuration with enough bends to provide 10 ft (3.05 m) of total line set length outside the dwelling
3. Ensure that vapor and liquid tube diameters are appropriate for unit capacity.
4. Run refrigerant tubes as directly as possible by avoiding unnecessary turns and bends.
5. Leave some slack between structure and unit to absorb vibration.
6. When passing refrigerant tubes through the wall, seal opening with RTV or other pliable silicon-based caulk (see Fig. 1).

7. Avoid direct tubing contact with water pipes, duct work, floor joists, wall studs, floors, and walls.
8. Do not suspend refrigerant tubing from joists and studs with a rigid wire or strap which comes in direct contact with tubing (see Fig. 1).
9. Ensure that tubing insulation is pliable and completely surrounds vapor tube.
10. When necessary, use hanger straps which are 1 in. wide and conform to shape of tubing insulation. (See Fig. 1.)
11. Isolate hanger straps from insulation by using metal sleeves bent to conform to shape of insulation.
12. If these installation recommendations were not followed, gas pulsation may be transmitted through improperly mounted line sets. In this case, an external vapor line muffler accessory (part no. LM10KK003) is available to minimize noise due to gas pulsations.

⚠ CAUTION

EQUIPMENT DAMAGE HAZARD

Failure to follow this caution may result in equipment damage.

If proper lineset routing techniques are not followed, variable speed systems can be susceptible to lineset transmitted noise inside the dwelling and, in extreme cases, tubing breakage.

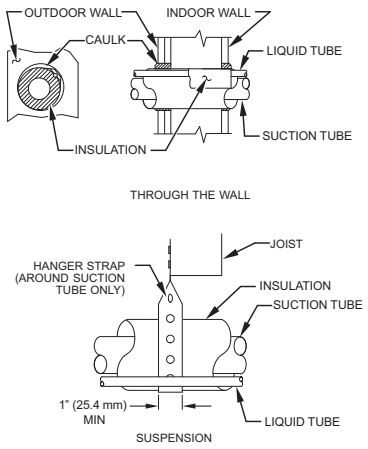

Fig. 1 - Connecting Tubing Installation

The outdoor unit contains the correct amount of refrigerant charge for operation with AHRI rated indoor units when connected by 15 ft (4.57 m) of field-supplied or factory accessory tubing.

Adjust refrigerant charge by adding or removing the charge to/from the unit depending on lineset length and indoor unit as calculated and displayed on the UI. The user interface (UI) calculates required charge adjustment and total system charge required. For proper unit operation, check refrigerant charge using charging information in the Check Charge section of this instruction.

IMPORTANT: Liquid-line size is 3/8-in. OD for all 288BNV applications. The maximum allowable equivalent line set length is 100 ft. (30.5 m).

IMPORTANT: Always install the factory-supplied liquid-line filter drier. Obtain replacement filter driers from your distributor or branch.

INSTALLATION

Specifications for this unit in residential new construction market require the outdoor unit, indoor unit (including metering device), refrigerant tubing sets, and filter drier listed in pre-sale literature. There can be no deviation. Consult the Service Manual – Air Conditioners and Heat Pumps Using Puron® Refrigerant to obtain required unit changes for specific applications and for R-22 retrofit.

Step 1 — Check Equipment and Job Site

Unpack Unit

Move to final location. Remove carton taking care not to damage unit.

Inspect Equipment

File claim with shipping company prior to installation if shipment is damaged or incomplete. Locate unit rating plate on unit corner panel. It contains information needed to properly install unit. Check rating plate to be sure unit matches job specifications.

Step 2 — Install on a Solid, Level Mounting Pad

If conditions or local codes require the unit be attached to pad, tie down bolts should be used and fastened through knockouts provided in unit base pan. Refer to unit mounting pattern in Fig. 2 to determine base pan size and knockout hole location.

For hurricane tie downs, contact distributor for details and PE (Professional Engineer) Certification, if required.

On rooftop applications, mount on level platform or frame. Place unit above a load-bearing wall and isolate unit and tubing set from structure. Arrange supporting members to adequately support unit and minimize transmission of vibration to building. Consult local codes governing rooftop applications.

Roof mounted units exposed to winds above 5 mph may require wind baffles. Consult the Service Manual - Residential Split System Air Conditioners and Heat Pumps Using Puron® Refrigerant for wind baffle construction.

NOTE: Unit must be level to within ±2° (±3/8 in./ft,±9.5 mm/m.) per compressor manufacturer specifications.

Step 3 — Clearance Requirements

When installing, allow sufficient space for airflow clearance, wiring, refrigerant piping, and service. Allow 24 in. (609.6 mm) clearance to service end of unit and 48 in. (1219.2 mm) (above unit. For proper airflow, a 6-in. (152.4 mm) clearance on 1 side of unit and 12-in. (304.8 mm) on all remaining sides must be maintained. Maintain a distance of 24 in. (609.6 mm) between units. Position so water, snow, or ice from roof or eaves cannot fall directly on unit.

On rooftop applications, locate unit at least 6 in. (152.4 mm) above roof surface.

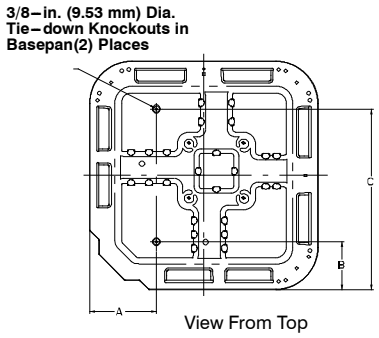

UNIT BASE PAN Dimension in. (mm)	TIEDOWN KNOCKOUT LOCATIONS in. (mm)		
	A	B	C
23 X 23 (596 X 596)	7–13/16 (198)	4–7/16 (102)	18–1/8 (458)
31.2 X 31.2 (792 X 792)	9–1/8 (232)	6–9/16 (167)	24–11/16 (627)

Fig. 2 - Tie-down Knockout Locations

Step 4 — Operating Ambient

The minimum outdoor operating ambient in cooling mode is 40°F (4.4°C) with Evolution® Connex™ Control, 55°F (12.8°C) with non-communicating systems. The maximum outdoor operating ambient in cooling mode is 115°F (46.1°C). Compressor protections will prevent cooling mode operation below minimum ambient temperature range. The system may operate in cooling up to 125°F (52°C) (52C) with significant reduced capacity cutback above 115°F (46.1°C). Refer to Product Data "Detailed Cooling Capacity" table. Low ambient cooling operation is not currently available. The maximum heating operation ambient is 66°F (18.9°C). Compressor protections will prevent starting below 10°F (-12.2°C) and operation below 2°F (-16.7°C).

Step 5 — Elevate Unit

Elevate unit per local climate and code requirements to provide clearance above estimated snowfall level and ensure adequate drainage of unit.

⚠ CAUTION

UNIT OPERATION HAZARD

Failure to follow this caution may result in equipment damage or improper operation.

Do not allow water and/or ice to build up in base pan.

⚠ CAUTION

UNIT OPERATION HAZARD

Failure to follow this caution may result in equipment damage or improper operation.

Locate the unit in such a way that it is stable in all circumstances including adverse weather conditions.

Step 6 — Make Piping Connections

⚠ WARNING

PERSONAL INJURY AND UNIT DAMAGE HAZARD

Failure to follow this warning could result in personal injury or death.

Relieve pressure and recover all refrigerant before system repair or final unit disposal. Use all service ports and open all flow-control devices, including solenoid valves.

⚠ CAUTION

UNIT DAMAGE HAZARD

Failure to follow this caution may result in equipment damage or improper operation.

Do not leave system open to atmosphere any longer than minimum required for installation. POE oil in compressor is extremely susceptible to moisture absorption. Always keep ends of tubing sealed during installation.

⚠ CAUTION

UNIT DAMAGE HAZARD

Failure to follow this caution may result in equipment damage or improper operation.

If ANY refrigerant tubing is buried, provide a 6 in. (152.4 mm) vertical rise at service valve. Refrigerant tubing lengths up to 36 in. (914.4 mm) may be buried without further special consideration. Do not bury lines longer than 36 in. (914.4 mm).

Outdoor units may be connected to indoor section using accessory tubing package or field-supplied refrigerant grade tubing of correct size and condition. For tubing requirements between 80 - 100 ft. (24.38 - 30.48 m), capacity and performance losses can occur. Follow the pipe sizing recommendations in the 288BNV Product data to manage these losses. This unit shall not be installed with greater than 100 ft (30.48 m) of equivalent line length.

Refer to Table 1 for field tubing diameters. No additional accessories are required for line lengths between 80 - 100 ft. (24.4 - 30.5 m) on this product.

Table 1 – Refrigerant Connections and Recommended Liquid and Vapor Tube Diameters (in.)

UNIT SIZE	LIQUID		VAPOR*		
	Connection Diameter	Tube Diameter	Connection Diameter	Max (Rated) Diameter	Minimum Tube Diameter
288BNV024, 288BNV025	3/8	3/8	3/4	7/8	5/8
288BNV036	3/8	3/8	3/4	7/8	5/8
288BNV048	3/8	3/8	7/8	1–1/8	3/4

* Units are rated with 25 ft. (7.6 m) of lineset. See Product Data sheet for performance data when using different size and length line sets.

Notes:
1. Do not apply capillary tube indoor coils to these units.

Outdoor Unit Connected to Factory-Approved Indoor Unit

Outdoor unit contains correct system refrigerant charge for operation with factory-approved, AHRI-rated indoor units when connected by 15 ft. (4.57 m) of field-supplied or factory-accessory tubing, and factory-supplied filter drier. Check refrigerant charge for maximum efficiency.

NOTE: If the indoor furnace coil width is more than the furnace casing width, refer to the indoor coil Installation Instructions for transition requirements.

Install Liquid-Line Filter Drier Indoor

Refer to Fig. 3 and install filter drier as follows:

1. Braze 5-in. (127 mm) liquid tube to the indoor coil.
2. Wrap filter drier with damp cloth.
3. Braze filter drier to above 5-in. (127 mm) liquid tube.
4. Connect and braze liquid refrigerant tube to the filter drier.

⚠ CAUTION

UNIT DAMAGE HAZARD

Failure to follow this caution may result in unit damage or improper operation.

Installation of filter drier in liquid line is required.

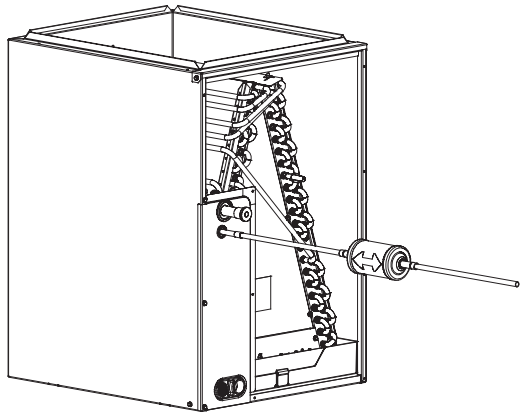

A05227

Fig. 3 - Liquid-Line Filter Drier

Refrigerant Tubing connection Outdoor

Connect vapor tube to fitting on outdoor unit vapor service valves (see Table 1).

No Installation of Adapter Tube

Although it is a heat pump this unit has a standard AC liquid service valve. An EXV inside the unit serves as the heating expansion device.

Sweat Connections

⚠ CAUTION

UNIT DAMAGE HAZARD

Failure to follow this caution may result in equipment damage or improper operation.

- Use a brazing shield
- Wrap service valves with wet cloth or heat sink material.

Use refrigerant grade tubing. Service valves are closed from factory and ready for brazing. After wrapping service valve with a wet cloth, braze sweat connections using industry accepted methods and materials. Consult local code requirements. Refrigerant tubing and indoor coil are now ready for leak testing. This check should include all field and factory joints.

Evacuate Refrigerant Tubing and Indoor Coil

⚠ CAUTION

UNIT DAMAGE HAZARD

Failure to follow this caution may result in equipment damage or improper operation.

Never use the system compressor as a vacuum pump.

Refrigerant tubes and indoor coil should be evacuated using the recommended deep vacuum method of 500 microns. The alternate triple evacuation method may be used. See Service Manual for triple evacuation method. Always break a vacuum with dry nitrogen prior to opening the refrigerant system for servicing.

Deep Vacuum Method

The deep vacuum method requires a vacuum pump capable of pulling a vacuum of 500 microns and a vacuum gauge capable of accurately measuring this vacuum depth. The deep vacuum method is the most positive way of assuring a system is free of air and liquid water. (See Fig. 4)

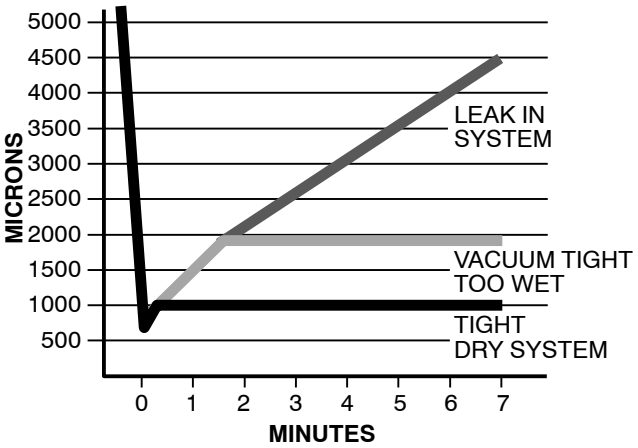

A95424

Fig. 4 - Deep Vacuum Graph

Final Tubing Check

IMPORTANT: Check to be certain factory tubing on both indoor and outdoor unit has not shifted during shipment. Ensure tubes are not rubbing against each other or any sheet metal. Pay close attention to feeder tubes, making sure wire ties on feeder tubes are secure and tight.

Step 7 — Make Electrical Connections

⚠ WARNING

ELECTRICAL SHOCK HAZARD

Failure to follow this warning could result in personal injury or death.

Do not supply power to unit with compressor terminal box cover removed.

Be sure field wiring complies with local and national fire, safety, and electrical codes, and voltage to system is within limits shown on unit rating plate. Contact local power company for correction of improper voltage. See unit rating plate for recommended circuit protection device.

NOTE: Operation of unit on improper line voltage constitutes abuse and could affect unit reliability. See unit rating plate. Do not install unit in system where voltage may fluctuate above or below permissible limits.

NOTE: Use copper wire only between disconnect switch and unit.

NOTE: Install branch circuit disconnect of adequate size per NEC to handle unit starting current. Locate disconnect within sight from and readily accessible from unit, per Section 440-14 of NEC.

Route Ground and Power Wires

Remove access panel to gain access to unit wiring. Extend wires from disconnect through power wiring hole provided and into unit control box.

⚠ WARNING

ELECTRICAL SHOCK HAZARD

Failure to follow this warning could result in personal injury or death.

The unit cabinet must have an uninterrupted or unbroken ground to minimize personal injury if an electrical fault should occur. The ground may consist of electrical wire or metal conduit when installed in accordance with existing electrical codes.

Connect Ground and Power Wires

Connect ground wire to ground connection in control box for safety. Connect power wiring to contactor as shown in Fig. 5.

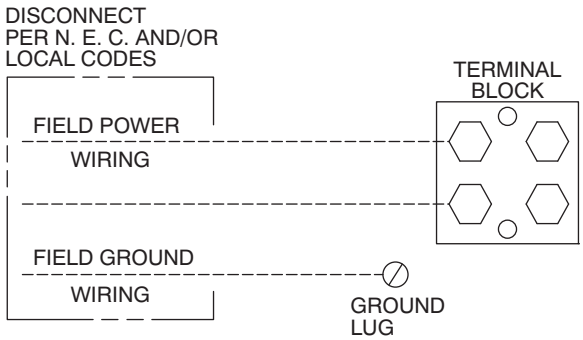

A14028

Fig. 5 - Line Power Connections

Connect Control Wiring-Evolution Connex

Connect to Evolution connections. Only two wires (AB) to Evolution capable indoor unit (furnace or fan coil) are required. Connect C if additional grounding is required (see Fig. 6).

IMPORTANT: This system requires the power supplied to the outdoor unit, and the indoor unit, for the UI to communicate with the outdoor unit.

Connect Control Wiring- Non-Communicating

Six wires are required when connecting 288BNV models to non-communicating 2-stage thermostats. Use Fig. 7 For required connections. Unit is configured by factory for Evolution communicating control. To wire unit for non-communicating control, disconnect the green (A) and yellow (B) wires from ABCD plug and connect appropriate wires to low voltage terminal block. Use wire nuts to attach thermostat wire to LVCH harness.

General Information

Use No. 18 AWG or larger color-coded, insulated (35°C minimum) wire for low voltage control wires.

All wiring must be NEC Class 2 and must be separated from incoming power leads.

Use furnace transformer, fan coil transformer, or accessory transformer for control power requirement of system accessories external to the OD unit. The outdoor unit has its own transformer power.

Final Wiring Check

IMPORTANT: Check factory wiring and field wire connections to ensure terminations are secured properly. Check wire routing to ensure wires are not in contact with tubing, sheet metal, etc.

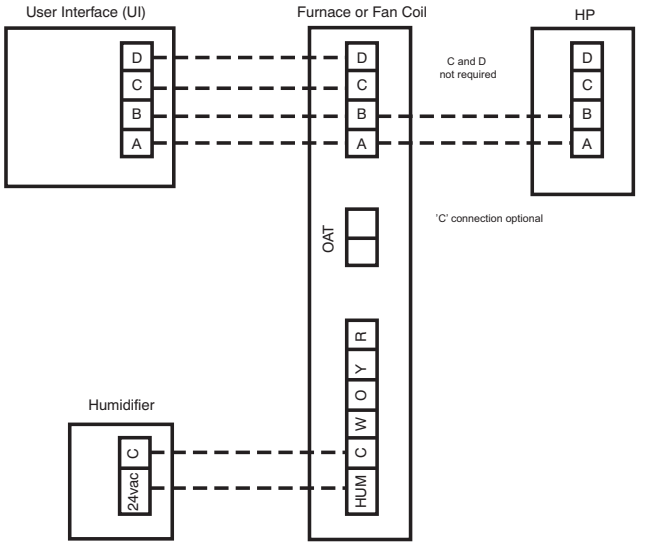

A11144

Fig. 6 - Evolution Furnace or Fan Coil Wiring with Communicating Variable Speed HP

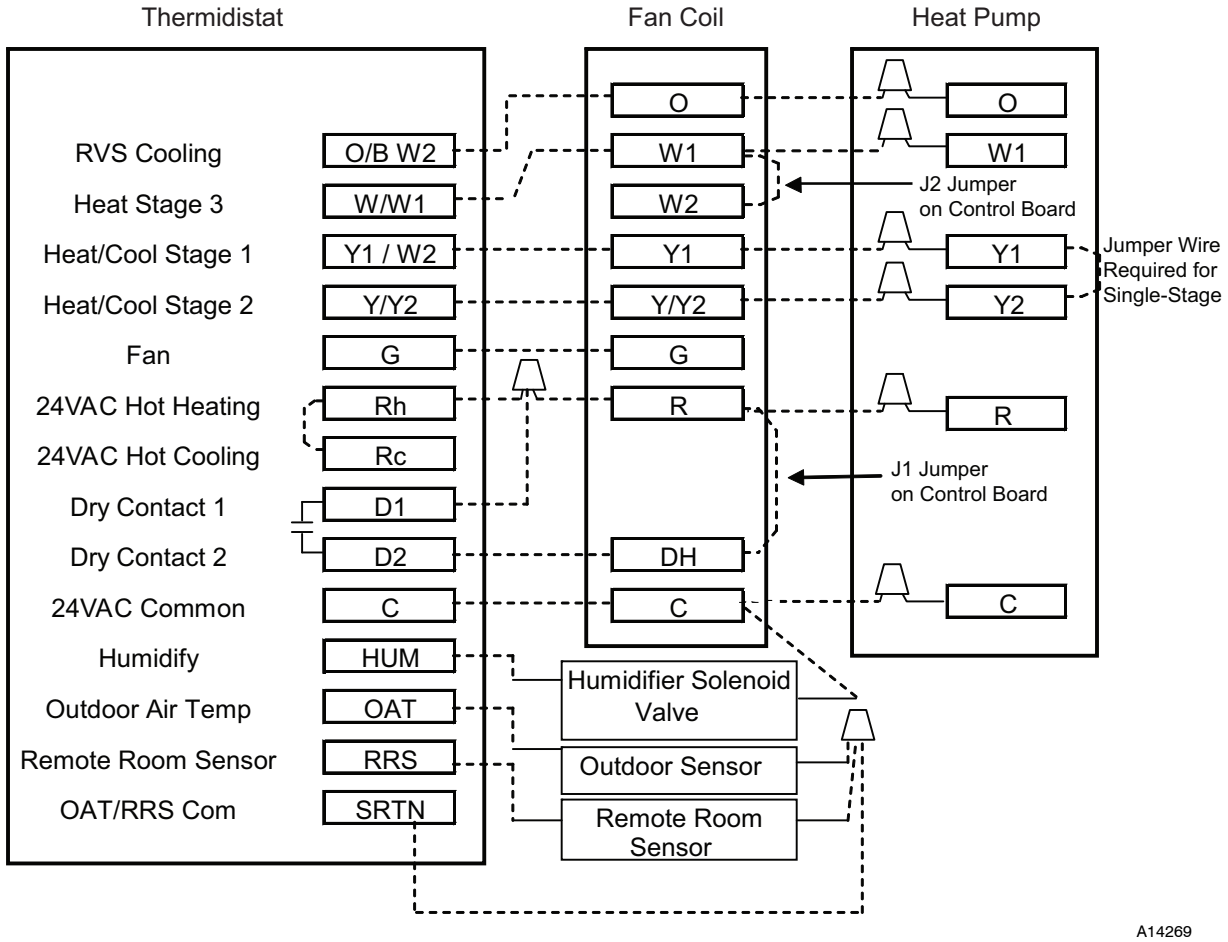

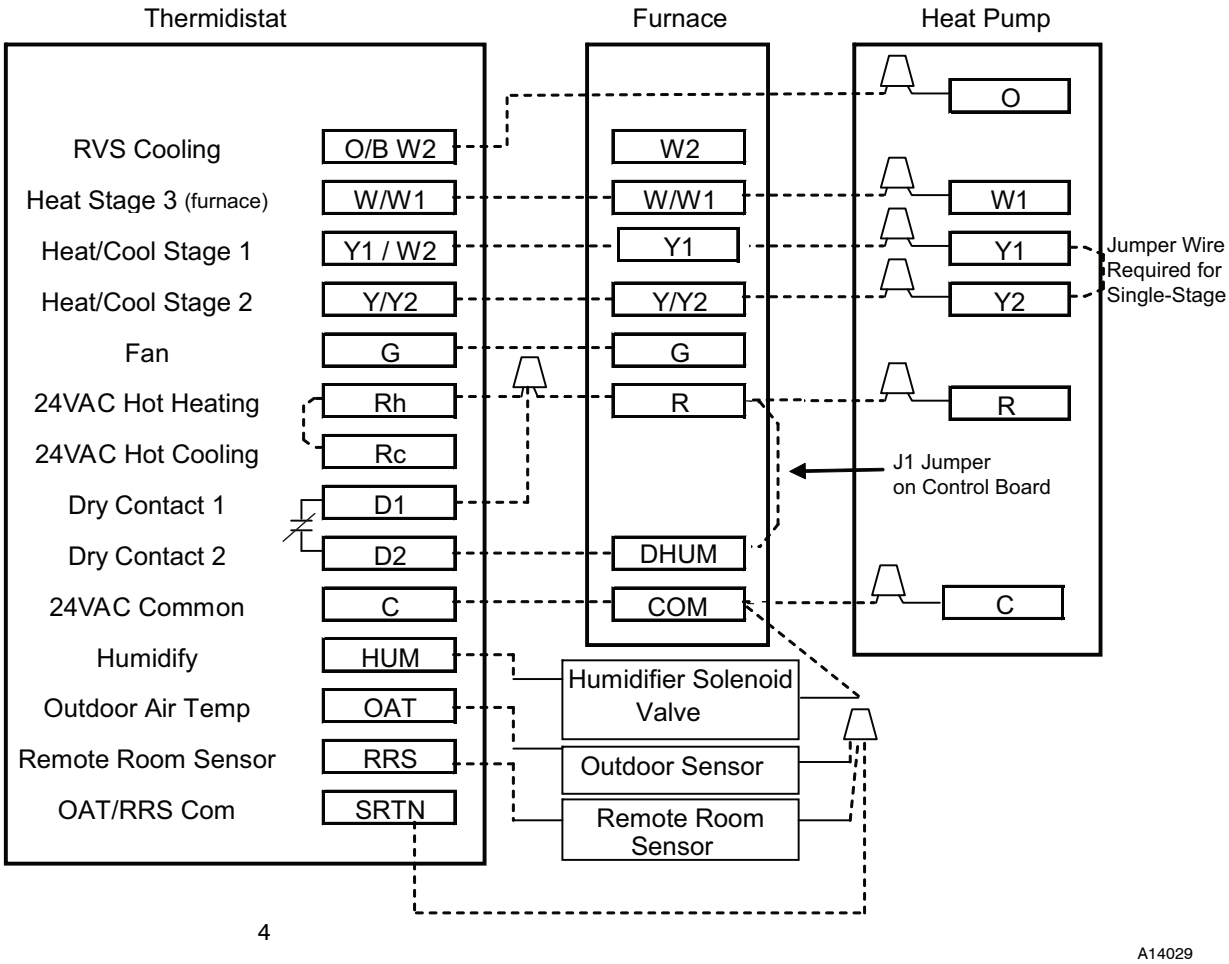

Fig. 7 - Low Voltage Wiring (Non-Communicating)

Step 8 — Compressor Crankcase Heater

This compressor has an internal crankcase heater. Furnish power to the unit a minimum of 24 hr before starting the unit for the first time.

To furnish power to heater only, set thermostat to OFF and close electrical disconnect to outdoor unit.

Power is not required to the indoor unit or User Interface for proper operation of heater. Crankcase heater will be intelligently energized as needed between operations, even when the UI or thermostat and indoor unit is not installed, as long as there is power to the outdoor unit.

Airflow Setup for Evolution Connex Control Furnace or FE Fan Coil (communicating)

This system can only be installed with Evolution-capable indoor and Evolution Connex User Interface (UI) SYSTXBBUITN01 or SYSTXBUITW01 with version 11 software or newer. When using an Evolution Connex User Interface, airflow is automatically selected based on equipment size. The user has the option of selecting Comfort, Efficiency and Max airflow for Heating and/or Cooling modes. These should be selected based on balance between the homeowner's comfort and energy consumption expectations. See User Interface Installation Instructions for additional available adjustments.

Due to using a communicating control with the fan coil or the furnace, dip switch adjustments are not necessary. The outdoor unit configuration and the indoor airflows are determined by communicating control setup.

Airflow Setup for Non-communicating Fan Coil

The system can be installed with a standard 2-stage heat pump thermostat and FV4C fan coil without additional accessories. Select appropriate unit size on fan coil Easy select board.

For replacement applications with older FV4(A,B), FK4 and 40FK fan coils, the model plug in the outdoor unit must be changed per Table 2 below.

The model plug adjusts compressor speed to match available low stage indoor airflow.

Table 2 – Alternate Model Plug

FV4(A,B), FK4, 40FK Fan Coil Models* (Requires outdoor model plug change)		
Unit Size	Factory Model Plug # HK70EZ***	Required Accessory Model Plug # HK70EZ***
288BNV024 288BNV025	001	016
288BNV036	002	017
288BNV048	003	018

* FK4 and 40FK also require a TXV change. See accessory list for approved TXV.

Airflow Setup for Non-communicating Furnaces

For installations with non-communicating furnaces, set airflows to 350-400 cfm/nominal ton in high stage and 70-80 percent of high stage airflow in low stage.

Step 9 — Install Accessories

No refrigeration circuit accessories are required or are available for installation within the unit. External to the unit, the same accessories such as support feet, snow rack, wind baffle etc., available on other Bryant units, can also be used on this line of product. For models utilizing 23 inch x 23 inch base pans, it is recommended to use 5 support feet in order to fully support unit. See Fig. 8. Refer to the individual Installation Instructions packaged with kits or accessories when installing.

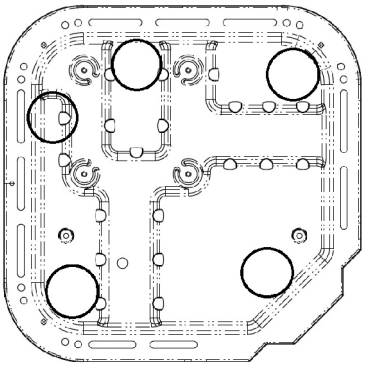

A14008

Fig. 8 - Recommended Support Feet Location

Step 10 — Start-Up

⚠ CAUTION

UNIT OPERATION AND SAFETY HAZARD

Failure to follow this caution may result in minor personal injury, equipment damage or improper operation.

Observe the following:

1. Do not overcharge system with refrigerant.
2. Do not operate unit in a vacuum or at negative pressure.
3. Do not disable low pressure transducer or high pressure.
4. Dome temperatures may be hot.

⚠ CAUTION

PERSONAL INJURY HAZARD

Failure to follow this caution may result in personal injury.

Wear safety glasses, protective clothing, and gloves when handling refrigerant.

⚠ CAUTION

ENVIRONMENTAL HAZARD

Failure to follow this caution may result in environmental damage.

Federal regulations require that you do not vent refrigerant to the atmosphere. Recover during system repair or final unit disposal.

Follow these steps to properly start up the system:

1. After system is evacuated, close the disconnects to energize the ID and OD units to access the user interface (UI), **Keep system in off mode**. Under the Advanced function menu, on the Evolution Connex Control, access the REQUIRED CHARGE CALCULATION screen. Enter the lineset length and vapor tube diameter. The user interface (UI) will now display the required charge adjustment (see Fig. 9 for example) for the lineset and an adjustment for a large indoor coil if recognized as such by the UI.
2. Add or remove the required charge adjustment for lineset length to liquid service valve.
   Note: If lineset is less than 15 feet (-9.4°C), charge removal may be necessary.
3. Fully open liquid and vapor service valves.

A14019

Fig. 9 - Required Charge Adjustment Calculated in UI

4. Set User Interface to operate cooling in CHARGING mode. Charging mode operates system compressor speed and fan speeds to proper conditions to check the refrigerant charge.

NOTE: See Step 13 for charging check.

5. Wait for the specified stabilization time, depending on lineset length. Compare subcooling at liquid line service valve to Liquid Line Subcooling Target as shown CHARGING screen (LiqLin SC TGT) (see Fig. 10 for example).

A14020

Fig. 10 - Liquid Line Subcooling Target

Step 11 — System Functions and Sequence of Operation

The 288BNV models utilize either Evolution Connex Communicating User Interface (UI) or conventional HP thermostat. When using UI controls, a call for cooling will energize the outdoor fan and compressor to run at lowest cooling demand. If this does not satisfy cooling demand, the system will ramp up in stages until it satisfies the demand. After coping with the higher demand, the unit returns to lower capacity operation until the demand is satisfied or until an increase in demand. When using a conventional thermostat, the thermostat controls the staging of outdoor unit.

When all demand is satisfied, the compressor will shut off. As the unit operates at lower capacity, system vapor (suction) pressure will be higher than it is during a standard single-stage system operation or during a higher capacity operation.

The user interface (UI) displays the operation mode and fault codes as specified in the troubleshooting section. See Table 7 for codes and definitions.

The conventional thermostat inputs are designed to work with most indoor units. See AHRI for approved combinations. Connections are Y/Y2, Y1, O, R, W, and C. Depending on thermostat and indoor unit, the system will operate at 1 or 2 capacities in heating or cooling mode.

NOTE: Only one code will be displayed on the outdoor unit control board (the most recent, with the highest priority). The latest codes are stored and can be accessed via the UI.

Upon a call for cooling through the UI (or the Y1 and/or Y2 connections in a non-communicating system), the Application Operation Control (AOC) board (see Fig. 18) will open the EXV to the fully open position. For heating, the AOC board will open the EXV to a preset position, depending upon the conditions. Based upon the indoor space demand and the outdoor conditions, the UI will then request a compressor speed and outdoor fan motor speed.

If the conditions are correct for operation, the control board will allow the requested operation to begin, but if the control board determines that the conditions are not correct, the board will decide what other operation nearing that condition is acceptable. The inverter Motor Operational Control (MOC) then outputs the three-phase PWM signal and frequency that gently ramps the compressor speed up to stage 2, and then will adjust to the demanded speed. The gentle ramp-up results in no locked rotor amps to the compressor motor. The unit nameplate for compressor LRA will be stamped N/A (not applicable).

During operation, the AOC monitors itself and the compressor operation along with the system pressures and temperatures. The MOC board monitors the temperature, current and operational status of the compressor, OD fan and the inverter itself. During operation, the compressor speed will be adjusted to meet the changes to the demand.

When the demand is satisfied, the inverter will ramp-down the compressor speed and stop. The EXV will step down to the completely closed position.

When the compressor stops, a 3.5 minute Time Guard period is activated which is followed by opening of the PEV valve for 150 seconds to equalize the refrigerant pressure difference between the high and low sides of the compressor. Upon equalizing the refrigerant pressure, and an additional 15 seconds of the Time Guard period, the compressor will be ready for the next operational demand.

If there is a power cycle, the Pressure Equalizer Valve (PEV) will open for 150 seconds before the compressor start-up. Opening the PEV valve returns the discharge gas directly back to the suction side of the compressor. This is done in either cooling or heating mode so that the rotary compressor will start with a very low pressure differential.

The 3.5 minute Time Guard can be bypassed by momentarily shorting the Forced Defrost pins. Only the 3.5 minute time delay can be bypassed. Because it is important for compressor reliability, the 150-second PEV delay cannot be bypassed.

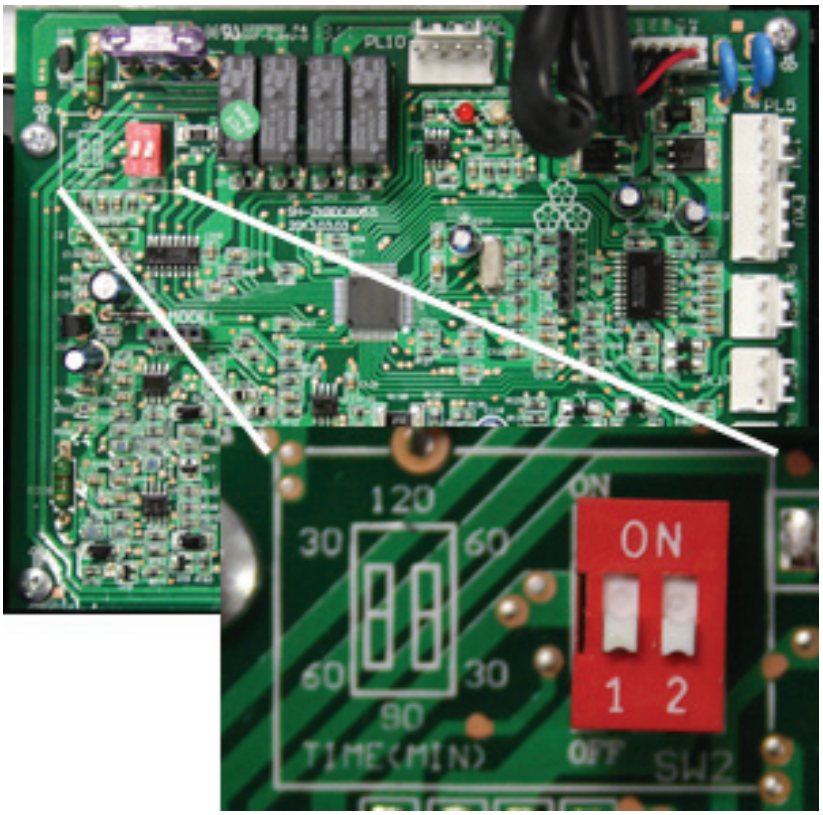

A14021

Fig. 11 - AOC Control Board

Crankcase Heater Operation

This unit has an internal crankcase heater that will be energized during the off cycle and is intelligently demanded by the system to prevent the compressor from being the coldest part of the system thus enhancing the reliability. The crankcase heater will function as needed any time the outdoor unit is powered. The indoor unit and UI do not need to be installed for the crankcase heater to operate properly.

The compressor windings will occasionally be energized during the OFF cycle (depending on the length of the OFF cycle) to start the stator heat operation, thus maintaining a sump temperature that is essential for compressor reliability. The compressor will not run during this process.

Outdoor Fan Motor Operation

The outdoor unit control (Fig. 11) energizes outdoor fan anytime the compressor is operating, except for defrost. The OD fan motor is variable speed. The speed will change depending on the ambient temperature and the cooling or heating capacity required.

Time Delays

The unit time delays include:

- 3.5 minute time delay after last cycle, initial power up, return from brown-out condition. To bypass this feature, momentarily short and release Forced Defrost pins.
- At the end of every compressor ON cycle, there will be 150 seconds of PEV open period for pressure equalization followed by 15 seconds of PEV Off period before the next compressor ON cycle. This delay cannot be bypassed as it helps compressor reliability.
- 15 second delay at termination of defrost before the auxiliary heat is de-energized.
- See Table 7 for other delay information.

Communication and Status Function Lights

Evolution Connex Control, Green Communications (COMM)Light

A green LED (COMM light) on the outdoor board (see Fig. 11) indicates successful communication with the other system products. The green LED will remain OFF until communication is established. Once a valid command is received, the green LED will turn ON continuously. If no communication is received within 2 minutes, the LED will be turned OFF until the next valid communication. The green LED will be turned off when using a standard 2-stage non-communicating heat pump thermostat.

Amber Status Light

Amber colored **STATUS light** indicates operation and error status. See Table 7 for definitions.

- Two minute time delay to return to standby operation from last valid communication.

Defrost

This user interface (UI) offers 5 possible defrost interval times: 30, 60 and 90 minutes, or AUTO. The default is AUTO.

Defrost interval times: 30, 60, and 90 minutes or AUTO are selected by the Evolution Connex Control User Interface if using UI. The 90 and 120 minute selection will default to 60 minutes at ambient below 37 degrees. The 120 minute selection will default to 90 minutes at ambient above 37 degrees.

If using non-communicating thermostat, defrost intervals are set using dip switches on outdoor control board (see Fig. 11). AUTO defrosts adjusts the defrost interval time based on the last defrost time as follows:

- When defrost time <5 minutes, the next defrost interval=90 minutes. (outdoor temperature above 37°F)
- When defrost time 5-7 minutes, the next defrost interval=60 minutes.
- When defrost time >7 minutes, the next defrost interval=30 minutes.

The control board accumulates compressor run time. As the accumulated run time approaches the selected defrost interval time, the control board monitors the coil temperature sensor for a defrost demand. If a defrost demand exists, a defrost cycle will be initiated at the end of the selected time interval. A defrost demand exists when the coil temperature is at or below 32°F (0°C) for 4 minutes during the interval. If the coil temperature does not reach 32°F (0°C) within the interval, the interval timer will be reset and start over.

- Upon initial power up the first defrost interval is defaulted to 30 minutes. Remaining intervals are at selected times.
- Defrost is only allowed to occur below 50°F (10°C) outdoor ambient temperature.

The defrost cycle is terminated as described below.

- When OAT is > 25°F (+3.89°C), defrost terminates if outdoor coil temperature (OCT) > 60°F (+15.6°C). And a minimum of 2 minutes defrost length.
- When OAT ≥ 25°F (+3.89°C), defrost will terminate if OCT is >45°F (+4.4°C) and a minimum of 2 minutes defrost length.
- Or 10 minutes has passed.

At the defrost termination, the outdoor fan will turn on 10 seconds before the reversing valve switching.

NOTE: Compressor speed during defrost will go to defrost speed.

Step 12 — Check Charge

Charge in CHARGING mode (communicating only)

Factory charge amount and desired subcooling are shown in the user interface (UI). To properly check or adjust charge, conditions must be favorable for subcooling charging in cooling mode. Favorable conditions exist when the outdoor temperature is between 65°F and 100°F (18°C and 38°C), and the indoor temperature is between 70°F and 80°F (21°C and 27°C). If the temperatures are outside of these ranges, weigh-in charge only. If charge confirmation is needed return to check subcooling in cooling mode when between 65°F (18.3°C) and 100°F (37.8°C) or use heating check chart in heating mode below 65°F (18.3°C).

Charging Procedure: Unit is factory charged for 15ft (4.57 m) of lineset. If any refrigerant charge adjustment is required due to the user inputted line set length, the UI will calculate and display the target subcooling and the amount of additional charge to be added. Therefore, the UI is your source of information for charging the system correctly. Refrigerant charge adjustment amount for adding or removing 0.6 oz/ft (17.74 g/m) of 3/8 liquid line above or below 15ft (4.57 m) respectively. Perform a final charge check only when in cooling and OD is between 65°F (18°C) and 100°F (38°C).

NOTE: UI indicates acceptable conditions if outside of this range. Do not charge if outside 65°F (18°C) and 100°F (38°C) outdoor temperature.

If the range is acceptable, go the CHARGING screen in the user interface (UI). At cooling conditions, set the user interface (UI) to check the charge in cooling mode. Allow system to operate in cooling mode for the stabilization period as indicated in the user interface (UI). Once conditions are indicated as favorable and stable by the user interface (UI), check the system charge by subcooling method. Compare the subcooling taken at the liquid service valve to the subcooling target (LiqLin SC TGT) listed on the charging screen. Add refrigerant if the subcooling is low and remove charge if subcooling is high. Tolerance should be ±2°F.

If any adjustment is necessary, add or remove the charge slowly (no greater than 0.5 lb per minute) and allow system to operate for 25 minutes to stabilize before declaring a properly charged system.

The use of a commercial charge metering device (restrictor) such as Imperial liquid low side charger model 535-C or Watsco ChargeFaster model CH200 is recommended when adding refrigerant to an operating system. This prevents potential damage of liquid slugging of the compressor and allows the subcooling to stabilize quicker.

If the indoor temperature is above 80°F (26.67°C), and the outdoor temperature is in the favorable range, adjust system charge by weight based on line length and allow the indoor temperature to drop to 80°F (26.67°C) before attempting to check system charge by subcooling method as described above.

If the indoor temperature is below 70°F (21.11°C), or the outdoor temperature is not in the favorable range, adjust charge for line set length above or below 15ft (4.57 m) and indoor fan coil / furnace coil per Table 3. Charge level should then be appropriate for the system to achieve rated capacity. The charge level could then be checked at another time when the both indoor and outdoor temperatures are in a more favorable range. This ensures maximum efficiency and reliability.

Charging Non-Communicating Systems

Charging Procedure: Force system to operate in high stage cooling by creating a large differential between room temperature and set point on thermostat. Use multi-meter to verify that 24 VAC is present between C, Y1 /Y2 terminals at outdoor unit.

Factory charge amount is shown on unit rating plate for high stage. Target subcooling chart is provided on back of control box door see Fig. 12 - 14 for example. To properly check or adjust charge, condition must be favorable for subcooling charging. Favorable conditions exists when outdoor temperature is between 65°F (18°C) and 100°F (38°C), and the indoor temperature is between 70°F (21°C) and 80°F (27°C). Follow the procedure below:

Unit is factory charged for 15ft (4.57 m) of lineset. Adjust charge by adding or removing 0.6 oz/ft (17.7 g/m) of 3/8 liquid line above or below 15ft (4.57 m) respectively.

For standard refrigerant line lengths (80ft/24.4 m or less), allow system to operate in cooling mode at least 25 minutes. If conditions are favorable, check system charge by subcooling method. If any adjustment is necessary, adjust charge slowly and allow system to operate for 25 minutes to stabilize before declaring a properly charged system.

If the indoor temperature is below 70°F (21.11°C), or the outdoor temperature is not in the favorable range, adjust charge for line set length above or below 15ft (4.57 m) and indoor fan coil /furnace coil per Table 4. Charge level should then be appropriate for the system to achieve rated capacity. The charge level should then be checked at another time when the both indoor and outdoor temperatures are in a more favorable range.

NOTE: If the line length is beyond 80ft (24.38 m) or greater than 20ft (6.10 m) vertical separation see Long line guideline for special charging requirement.

Table 3 – Required Charge Adjustment for Indoor Coil Model

Furnace or Fan Coil Model Number	288BNV024A003	288BNV025A003	288BNV036A003	288BNV048A003
CNPV*36**	0	0	0	N/A
CAP**36**	0	0	0	N/A
CSPH*36**	0	0	0	N/A
FE4A or FV4(A,B,C)NF002	0	0	0	N/A
FE4A or FV4(A,B,C)N(B,F)003	0	0	0	N/A
CNPV*42**	0	0	0	N/A
CAP**42**	0	0	0	N/A
CNPV*48**	+0.75	+0.75	+0.75	0
CAP**48**	+0.75	+0.75	+0.75	0
CSPH*48**	+0.75	+0.75	+0.75	0
FE4A or FV4(A,B,C)N(B,F)005	+0.75	+0.75	+0.75	0
CNPV*60**	N/A	N/A	N/A	0
CSPH*60**	N/A	N/A	N/A	0
CAP**60**	N/A	N/A	N/A	+2.2
FE4A or FV4(A,B,C)NB006	N/A	N/A	N/A	+2.2

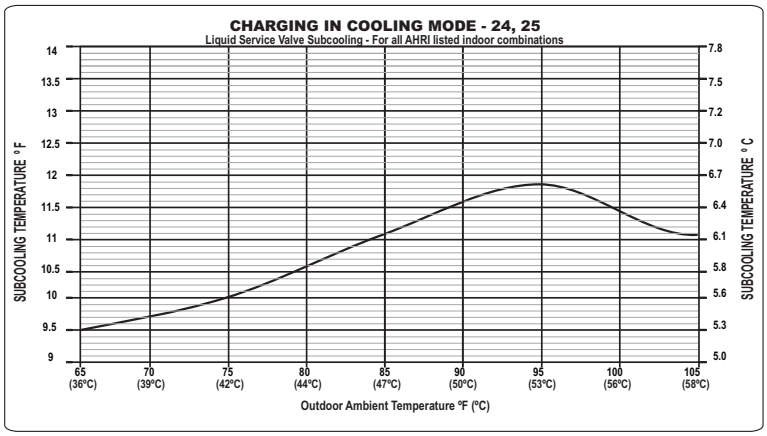

Fig. 12 – Charging in Cooling Mode 288BNV024/25

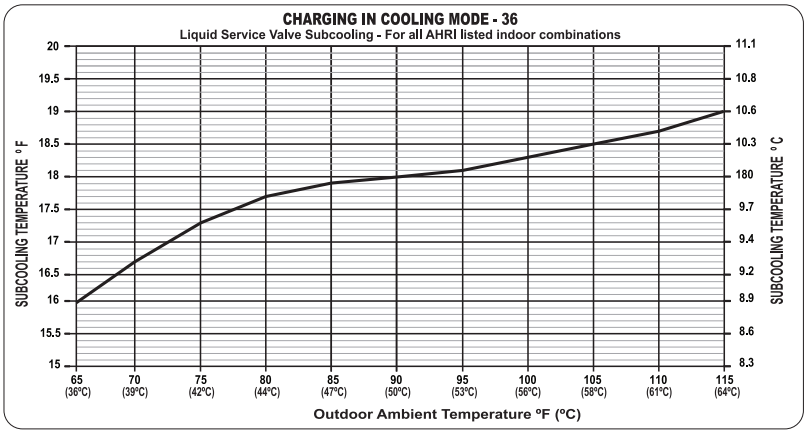

Fig. 13 – Charging in Cooling Mode 288BNV036

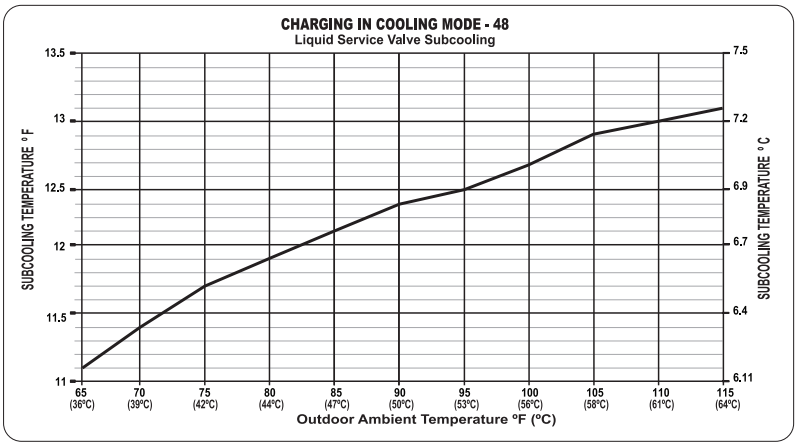

Fig. 14 – Charging in Cooling Mode 288BNV048

Heating Check Chart Procedure (See Fig.15 - 17) (Communicating / Non-communicating Systems)

In heating mode, the required charging method is by weigh-in. On new installations or complete recharge, refer to the unit nameplate and indoor fan coil / furnace coil per Table 3 for additional charge needed. Refrigerant charge adjustment amount for adding or removing 0.6 oz/ft (17.74 g/m) of 3/8 liquid line above or below 15ft (4.57 m) respectively.

Use the Defrost CHECKOUT mode to remove ice or frost from coil, if present, prior to checking the heating pressures.

To use the Heating Check Chart, the user interface (UI) must be in Refrigerant Charging mode selected from the Installation and Service screen. The Charging Mode Selection screen will show selections for Weigh-In Charge Method or Heating Check Charge Method. Select Heating Check Charge Method. The Heating Check Charge method will only be displayed if the conditions are right for checking the charge in heating mode. When Heating Check Charge Method is selected, the system will operate by running in stage 5 with appropriate outdoor fan speed and indoor airflow. Upon completion of a countdown period for system stabilization, check refrigerant pressures for the appropriate ambient temperatures shown in Fig. 15, 16 or 17 based the OD unit size.

To use the Heating Check Chart in non-communicating systems, operate system at Y1+Y2–high stage. These charts indicate whether a correct relationship exists between system operating pressure and air temperature entering indoor and outdoor units. If pressure and temperature do not match on chart, system refrigerant charge may not be correct. **DO NOT USE CHART TO ADJUST REFRIGERANT CHARGE**.

NOTE: High pressure is at vapor service valve. Add 12 psig if high pressure is taken from liquid service valve.

NOTE: When charging is necessary during heating season, charge must be weighed in accordance with unit rating plate, ±0.6 oz./ft (±17.74 g/m). of 3/8-in. liquid-line above or below 15 ft (4.57 m), respectively.

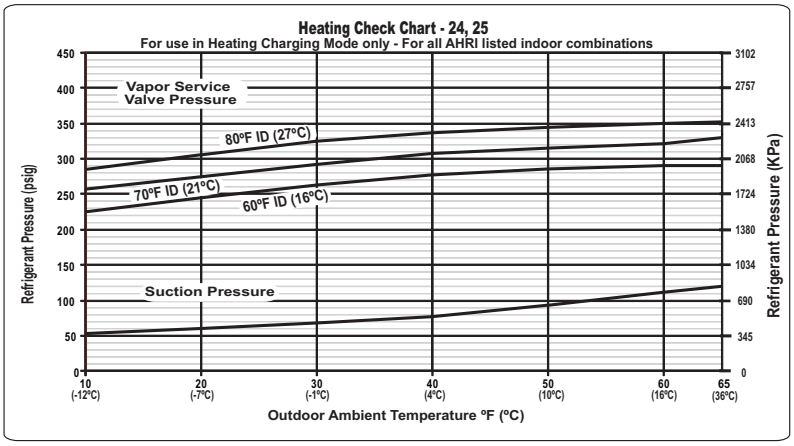

Fig. 15 - Heating Pressure Check Chart 288BNV024, 25

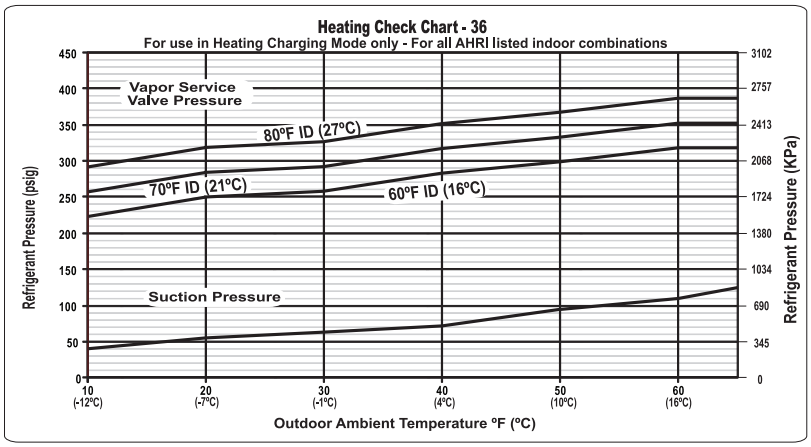

Fig. 16 - Heating Pressure Check Chart 288BNV036

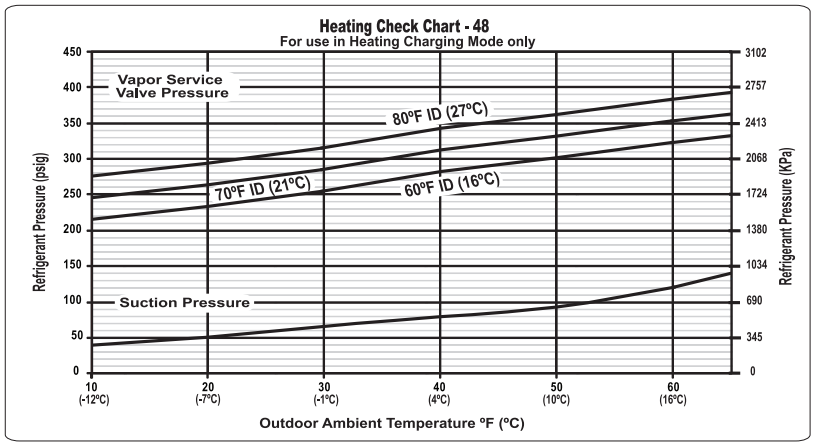

Fig. 17 - Heating Pressure Check Chart 288BNV048

Step 13 — Pumpdown & Evacuation

⚠ CAUTION

ENVIRONMENTAL HAZARD

Failure to follow this caution may result in environmental damage.

Federal regulations require that you do not vent refrigerant to the atmosphere. Recover during system repair or final unit disposal.

If this system requires either a Pump Down or Evacuation for any reason, the procedures below must be followed:

Pump Down - Evolution Communicating

Because this system is inverter controlled, compressor, suction pressure transducer and EXV, conventional procedure cannot be used to "pump down" and isolate the refrigerant into the outdoor unit. The UI (User Interface) has provisions to assist in performing this function.

1. Connect gauges to 288BNV liquid and vapor service valve ports to monitor operating pressures during and at completion of the procedure.
2. In the advanced menu of the UI, go to Checkout > Heat Pump> Pumpdown
3. Select mode to pump down in (COOL or HEAT), COOL mode allows refrigerant to be isolated in outdoor unit. HEAT mode allows the refrigerant to be isolated in indoor coil and lineset. Set desired time period. Default time period for the procedure is 120 minutes.
4. Select Start on UI to begin the pump-down process. Unit will begin running in selected mode after a brief delay.
5. Close the liquid service valve.
6. The unit will run in selected mode with the low pressure protection set to indicate pump-down is complete when the suction pressure drops below 10 psig. Compressor protections are still active to prevent damage to the compressor or inverter (high pressure, high current, high torque, etc.) .
7. Once system indicates pump-down complete or failure to complete shutdown, close vapor service valve.
8. A small quantity of charge will remain in isolated section of system dependent on ambient temperature and overall system charge. This charge must be manually recovered. A recovery system will be required to remove final quantity of refrigerant from indoor coil and line set.
9. Remove power from indoor and heat pump unit prior to servicing unit.

Pump Down – Using 2-stage HP Thermostat (Non-Communicating)

Because this system has an inverter controlled compressor, suction pressure transducer and EXV, conventional procedure cannot be used to "pump down" and isolate the refrigerant into the outdoor unit.

1. Connect gauges to 288BNV liquid and vapor service valve ports to monitor operating pressures during and at completion of the procedure.
2. Force system to operate in high stage by creating a large differential between room temperature and set point on thermostat. Use multi-meter to verify that 24 VAC is present between C and Y1 and Y2 terminals at outdoor unit.
3. Close the liquid service valve.
4. The unit will continue to run until high or low pressure switches open. Close vapor service valve once compressor shuts down.
5. Remove power from indoor and heat pump unit prior to servicing unit.
6. A quantity of charge will remain in isolated section of system dependent on ambient temperature and overall system charge. This charge must be manually recovered. A recovery system will be required to remove final quantity of refrigerant from indoor coil and line set.

Evacuation and recovery of refrigerant from 288BNV

Because this system has an EXV for the heating expansion device, additional steps may be taken to open the EXV for fastest refrigerant recovery and evacuation. If the EXV is not open when pulling a vacuum or recovering refrigerant from the heat pump unit, extended evacuation time may be required and/or inadequate vacuum obtained. The UI (User Interface) has provisions to open the EXV for refrigerant recovery and/or evacuation.

1. Connect gauges to 288BNV liquid and vapor service valve ports to monitor operating pressures during and at completion of the procedure. Attach recovery system or vacuum pump to gauge set as needed for the service procedure. The service valves must be open to evacuate the unit through the line set service ports. The suction capillary service port is a direct connection to the suction port of the compressor and may also be used.
2. In the advanced menu of the UI, go to Checkout > Heat Pump > Evacuation.
3. Set desired time period. Default time period for the procedure is 120 minutes.
4. Select START on UI to open the valve.
5. Begin evacuation or refrigerant recovery as required for the procedure after UI indicates the EXV is open. Power may be removed from heat pump after the UI indicates "READY TO EVACUATE."
6. Remove power from indoor and heat pump unit prior to servicing unit. The EXV will retain the open position.

NOTE: See service training materials for troubleshooting the EXV using EXV CHECK mode.

Evacuation and recovery of refrigerant from 288BNV when using non-communicating thermostat

Refrigerant recovery and evacuation can be performed without a UI (User Interface) but will take more time. If EXV is not forced open the recovery and evacuation must rely on check valve as a bypass.

1. Connect gauges to 288BNV liquid and vapor service valve ports to monitor operating pressures during and at completion of the procedure. Attach recovery system or vacuum pump to gauge set as needed for the service procedure. The service valves must be open to evacuate the unit through the line set service ports. The suction capillary service port is a direct connection to the suction port of the compressor and may also be used.
2. Begin evacuation or refrigerant. Allow extra time for refrigerant recovery and establishing a thorough evacuation.

MAJOR COMPONENTS

Variable speed Control Board

A13361

Fig. 18 - AOC (Application Operational Control) Board

The AOC board is located in the lower right hand side of inverter tray. It's functions include:

- Compressor speed control
- Outdoor fan motor control
- Reversing valve operation
- Defrost operation
- Crankcase heater operation
- Pressure switch monitoring
- Time Delays
- Pressure Transducer measurements
- PEV control (pressure equalizer valve)
- Temperature measurements
- EXV (Electronic Expansion Valve) operation control
- Inverter communication and control

Inverter

The inverter is located inside the control box. This is an air-cooled device that communicates with the control board and drives the compressor and fan motor to the demanded RPM. The inverter is always powered with line voltage since no contactor is used. The inverter changes the line voltage to DC volts and then recreates 3 phase sine waves that vary in frequency to drive the compressor and fan motor at the desired RPM.

NOTE: The unit may be operated with an Evolution Connex Control or a standard 2-stage HP thermostat. Evolution Connex Control will utilize 5 stages of heating and cooling, while 2-stage HP thermostat will only allow 2 discrete stages of heating and cooling operation.

Variable Speed Compressor

This unit contains a variable speed rotary compressor that has a wide operating range. It operates on a variable 3 phase sine wave provided by the inverter. This compressor can only be operated by the specific inverter supplied with the unit.

⚠ CAUTION

EQUIPMENT DAMAGE HAZARD

Failure to follow this caution may result in equipment damage and/or improper operation.

Do not attempt to apply line voltage directly to the compressor. This will destroy the compressor.

Electronic Expansion Valve (EXV)

This unit uses an electronic expansion valve for refrigerant metering in the heating mode. The control board drives the EXV to its proper position based on the operating mode and conditions. The Evolution Connex Control Service mode allows for manual opening and closing of the EXV for troubleshooting and pump down.

Field control Connections

For communicating operation use the communication Evolution plug only. Only two wires, AB (color), are required. If necessary, connect C for additional grounding (see Fig. 6). If using standard 2-stage HP thermostat, connect discrete inputs (R,C,Y2,Y1,O,W) for 2-stage control in heating and cooling modes.

Pressure Transducer (SPT)

A 5 VDC output low pressure transducer that provides a 0-5 VDC data for interpretation by the control board for a 0 to 200 psig range of pressure at the suction tube. This interpreted pressure data is then intelligently used by the AOC control board for low pressure cut-out, loss of charge management, compressor protection, oil circulation management, lubrication management and EXV control.

Pressure Equalizer Valve (PEV)

At the end of every compressor operation (after the 3.5 minute Time Guard period), the equalizer valve opens for 150 seconds plus an additional 15 seconds of protection before allowing the compressor to start ramping up.

The PEV is located next to the suction and discharge of the compressor. The function of this valve is to prevent the compressor from starting with a high refrigerant pressure differential, thus helping the reliability of the compressor.

NOTE: A hissing sound may be heard during the equalization process. This is normal.

TROUBLESHOOTING

Systems Communication Failure

If communication is lost with the User Interface (UI), the control will flash the appropriate fault code (see Table 7). Check the wiring to the User Interface and the indoor and outdoor units and power.

Model Plug

Each control board contains a model plug. The correct model plug must be installed for the system to operate properly (see Table 4).

The model plug is used to identify the type and size of unit to the control.

On new units, the model and serial numbers are inputted into the AOC board s memory at the factory. If a model plug is lost or missing at initial installation, the unit will operate according to the information input at the factory and the appropriate error code will flash temporarily. An RCD replacement AOC board contains no model and serial information. If the factory control board fails, the model plug must be transferred from the original board to the replacement board for the unit to operate.

When installing heat pump with older fan coils, a model plug change may be required. See table 2 for fan coils requiring model plug change.

NOTE: The model plug takes priority over factory model information input at the factory. If the model plug is removed after initial power up, the unit will operate according to the last valid model plug installed, and flash the appropriate fault code temporarily.

Table 4 – Factory Supplied Model Plug Information

MODEL NUMBER	MODEL PLUG NUMBER	PIN RESISTANCE (K–ohms)	
		Pins 1–4	Pins 2–3
288BNV024 288BNV025	HK70EZ001	5.1K	11K
288BNV036	HK70EZ002	5.1K	18K
288BNV048	HK70EZ003	5.1K	24K

Service Tool

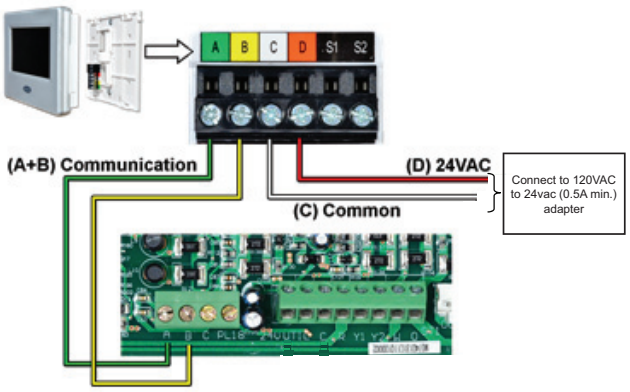

Fig. 19 - Service Tool Connection

When working on the outdoor unit of a split system, the technician would usually need to repeatedly walk between the indoor wall control and the unit outside. To save time, the communicating controls offer a service tool feature.

By wiring the service tool into the AOC board and powering it with an external adapter, the technician can have a wall control capable of running the system right at the outdoor unit.

To use a service tool, connect the A and B communication bus wires from this second communicating control to the terminals marked A and B on the terminal strip located in the bottom left corner of the AOC board (see Fig. 19). But instead of connecting the wires on the service tool to the terminals marked C and D, connect the C and D wires from the service tool to the two terminals of the 120VAC to 24VAC adapter (0.5Amp minimum) as shown in Fig. 19.

When the service tool is connected and powered up, the communicating controls inside the home will "go to sleep" and let the service tool take control of the system. In this manner, the service technician can run the diagnostic checkouts right at the outdoor unit using the service tool.

After the checkouts are completed and it is no longer necessary to use the service tool, remove it from the communicating controls and the indoor communicating controls will regain control in about two minutes.

Pressure Switch Protection

The outdoor unit is equipped with high pressure switch. If the control senses the opening of a high pressure switch (open 600+/-5 psig, close 470+/-10 psig @77°F), it will respond as follows:

1. Display the appropriate fault code (see Table 7).
2. After a 15 minute delay, if there is a call for cooling or heating and HPS is reset, the PEV opens for 150 seconds to equalize system pressures. The compressor and fan will then ramp to the next lower stage of operation until demand is satisfied. In the next call for heating/cooling system will resume normal operation.
3. If the opened switch closes at any time after the 15 minute delay, then the PEV opens for 150 seconds to equalize system pressures. The compressor and fan will then ramp to the next lower stage of operation until demand is satisfied. In the next call for heating/cooling system will resume normal operation.
4. If HPS trips 3 consecutive cycles, the unit operation is locked out for 4 hours.
5. In the event of a high-pressure switch trip or high-pressure lockout, check the refrigerant charge, outdoor fan operation, and outdoor coil (in cooling) for airflow restrictions, or indoor airflow in heating.
6. In the event of a low-pressure trip or low-pressure lockout, check the refrigerant charge and indoor airflow (cooling) and outdoor fan operation and outdoor coil in heating.

Control Fault

If the outdoor unit control board has failed, the control will flash the appropriate fault code (see Table 7). The control board should be replaced.

Brown-Out Protection

If the line voltage is less than 187V for at least 4 seconds, the Compressor and OD fan goes to 0 rpm. Compressor and fan operation are not allowed until voltage is a minimum of 190V. The control will flash the appropriate fault code (see Table 7).

230V Line (Power Disconnect) Detection

The control board senses the presence of absence of 230V through inverter feedback. Voltage should present at all times when system is in service regardless if system is running or standby. If there is no 230V at the inverter when the indoor unit is powered with a cooling or heating demand, the appropriate fault code is displayed on UI (communicating only – see Table 7). If system is configured with conventional heat pump thermostat (non-communicating), no fault code will be displayed on AOC board, nor will any status LEDs be lit. Use multimeter to check for the presence of 230V in this situation.

Temperature Thermistors

Thermistors are electronic devices which sense temperature. As the temperature increases, the resistance decreases. 10Kohm thermistors are used to sense outdoor air temperature (OAT), coil temperature (OCT) and the suction line temperature (OST) located between the reversing valve and the accumulator. A 50Kohm thermistor is used to sense discharge temperature (ODT).

Refer to Table 5 and Fig. 20 and 21 for resistance values versus temperature.

Table 5 – 10K/50Kohm Resistance Values vs Temperature

10Kohm °C (°F)	
TEMPERATURE	**RESISTANCE (ohms)**
25.0 (77.0)	10.0 + / – 2.3%
0.0 (32.0)	32.6 + / – 3.2%
-28.0 (-18.4)	85.5 + / – 3.4%
50Kohm	
125.0 (257.0)	1.7 + / – 1.6%
75.0 (167.0)	7.40 + / – 2.0%
25.0 (77.0)	50.0 + / – 2.3%

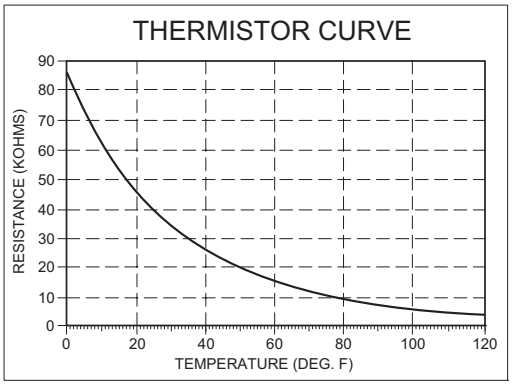

A91431

Fig. 20 - 10K Thermistor Resistance Versus Temperature

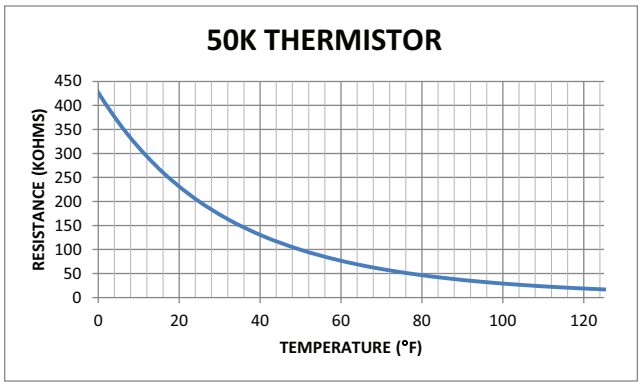

A14022

Fig. 21 - 50K Thermistor Resistance Versus Temperature

If the outdoor air or coil thermistor should fail, the control will flash the appropriate fault code (see Table 7).

IMPORTANT: The outdoor air thermistor, coil thermistor and suction thermistor should be factory mounted in the final locations. **Check to ensure thermistors are mounted properly (See Fig. 22, 23, 24 and 25).**

Thermistor Sensor Comparison

The control continuously monitors and compares the outdoor air temperature sensor and outdoor coil temperature sensor to ensure proper operating conditions. The comparison is:

- In cooling if the outdoor air sensor indicates ≥ 10°F (≥ 5.6°C) warmer than the coil sensor (or) the outdoor air sensor indicates ≥ 25°F (≥ 15°C) cooler than the coil sensor, the sensors are out of range.
- In heating if the outdoor air sensor indicates ≥ 35°F (≥ 19.4°C) warmer than the coil sensor (or) the outdoor air sensor indicates ≥ 10°F (≥ 5.6°C) cooler than the coil sensor, the sensors are out of range.

If the sensors are out of range, the control will flash the appropriate fault code as shown in Table 7.

The thermistor comparisons are not performed during low ambient cooling or defrost operation.

Failed Thermistor Default Operation

Factory defaults have been provided in the event of failure of outdoor air thermistor (OAT) and/or outdoor coil thermistor (OCT).

If the OAT sensor should fail, defrost will be initiated based on coil temperature and time.

If the OCT sensor should fail, defrost will occur at each time interval during heating operation, but will terminate after 2 minutes.

If there is a thermistor out-of-range error, defrost will occur at each time interval during heating operation, but will terminate after 2 minutes.

Count the number of short and long flashes to determine the appropriate flash code. Table 7 gives possible causes and actions related to each error.

Outdoor Coil Thermistor

The outdoor coil thermistor is a 10Kohm resistor used for multiple system operations. It provides the coil/liquid line temperature to the heat pump board and user interface. Low ambient operation, defrost initiation, defrost termination and assistance with OAT temperature measurement of some of the functions. The sensor must be securely mounted to the tube connecting the EXV and distributor. See Fig. 23 for proper placement. See Table 5 for proper resistances.

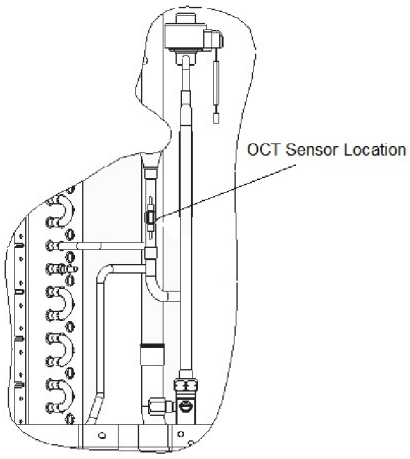

A11143

Fig. 22 - Outdoor Coil Thermistor (OCT) Attachment (On Distributor Tube)

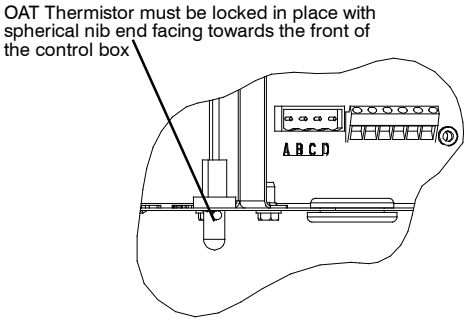

A11142

Fig. 23 - OAT Thermistor Location (Bottom of Control Box)

Suction Thermistor (OST)

Suction Thermistor is used for assisting in EXV control and must be secured on the suction tube and aligned longitudinally to the vertical surface of the tube axis (see Fig. 24).

⚠ CAUTION

UNIT DAMAGE HAZARD

Failure to follow this caution may result in equipment damage or improper operation.

In order to minimize the ambient influence, make sure the thermistor curved surface hugs the pipe surface and is secured tight using the wire tie fished through the original slot insulating polymer body.

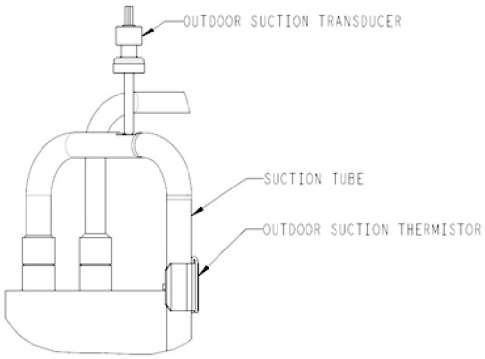

A14023

Fig. 24 - Suction Thermistor (OST) Attachment (On Suction Tube)

Discharge Thermistor (ODT)

Discharge Thermistor is used for protection against over temperature of the compressor. The ODT is located on the compressor discharge stub-out (see Fig. 25).

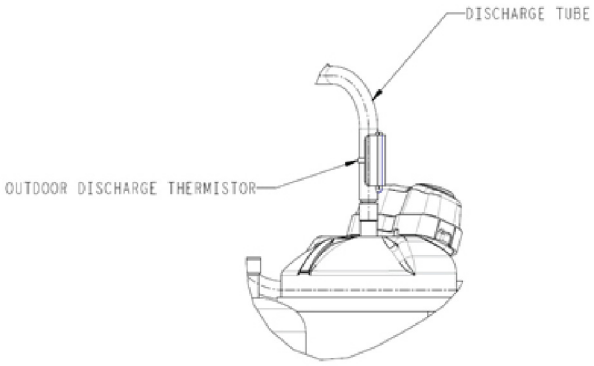

A14024

Fig. 25 - Discharge Thermistor (ODT)

Variable Speed Compressor Power Input Terminals

This compressor operates with a 3-phase variable frequency PWM variable voltage to the three fusite terminals.

Table 6 – Variable Speed Compressor Resistance (winding resistance at 70°F ± 20°F)

WINDING	MODEL 288BNV			
	024	25	36	48
Between terminals T1, T2, and T3	0.59 OHM	0.59 OHM	0.59 OHM	0.37 OHM
Between terminal & ground	>1 mega OHM			

⚠ CAUTION

UNIT DAMAGE HAZARD

Failure to follow this caution may result in equipment damage and/or improper operation.

Do not use Meggar for measuring the winding resistance.

Fan Motor

If verification of proper operation is required for the fan motor used in this unit, follow these steps:

1. Disconnect fan motor connector from control board.
2. Measure resistance between any 2 of the 3 leads present.
3. Compare measurement to values below

Fan Motor Resistance	
Unit Size	Resistance (Ohms)
24, 25, 36, 48	11.1

Status Codes

Table 7 shows the status codes flashed by the amber status light. Most system problems can be diagnosed by reading the status code as flashed by the amber status light on the control board.

The codes are flashed by a series of short and long flashes of the status light. The short flashes indicate the first digit in the status code, followed by long flashes indicating the second digit of the error code.

The short flash is 0.25 seconds ON and the long flash is 1.0 second ON. Time between flashes is 0.25 seconds. Time between short flash and first long flash is 1.0 second. Time between code repeating is 2.5 seconds with LED OFF.

Codes are easily read from user interface (UI)

EXAMPLE:

3 short flashes followed by 2 long flashes indicates a 32 code. Table 7 shows this to be low pressure switch open.

Utility Interface With Evolution Connex Control

The utility curtailment relay should be wired between the two UTIL connections on the control board for this Evolution Communicating System (see Fig. 26). This input allows a power utility device to interrupt compressor operation during peak load periods. When the utility sends a signal to shut the system down, the User Interface status screen will display, ”Curtailment Yes”. See UI installation instructions for setup details.

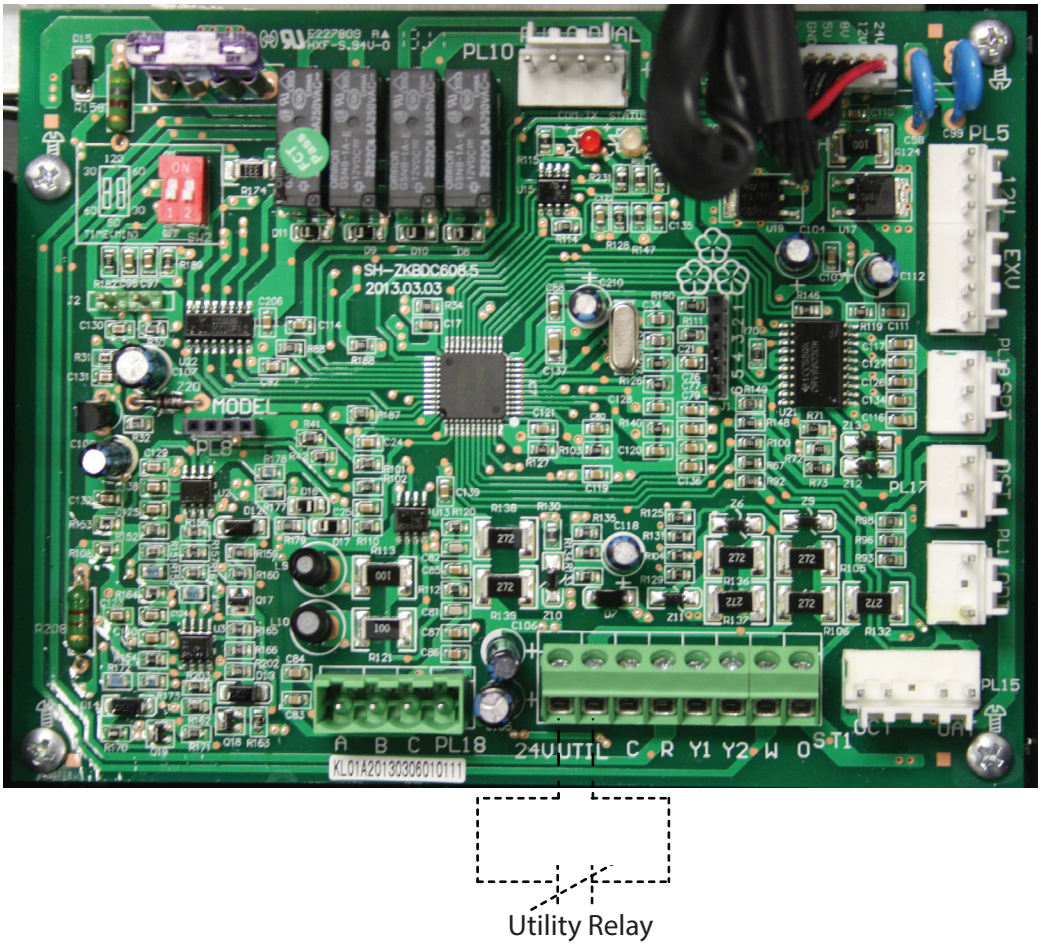

A13414

Fig. 26 - Variable Speed Control Board with optional Utility Relay

Table 7 – Troubleshooting

SERVICE		
AMBER LED DESCRIPTION	*** FLASH CODE (Amber LED)**	**RESET TIME (Minimum) Minutes**
Standby	ON, no flash	- -
Variable Capacity Mode	1, pause	- -
Variable Speed Range Cutback	1 (2 sec ON), longer pause (1 second OFF)	- -
Communications Loss	16	N/A
Invalid Model	25	N/A
High Pressure Switch Open	31	15
Low Pressure Trip	32	15
Control Fault	45	N/A
Brownout Event	46	6
Lost Inverter Communication	48	6
230VAC Dropout-Reset Event	49	6
Outdoor Discharge Temp Sensor Fault	52	N/A
Outdoor Air Temp Sensor Fault	53	N/A
Suction Temp Sensor Fault	54	N/A
Coil Temp Sensor Fault	55	N/A
OAT-OCT Thermistor Out of Range	56	N/A
Suction Pressure Sensor Fault	57	15
SuctionThermistor Range Fault	58	N/A
Discharge Temperature Out of RangeEvent	59	15
Fan Inverter Fault	61	6
Fan Inverter Temp High	62	6
Fan Inverter Over Current	63	6
D C Voltage Low Fault	65	6
Outdoor Fan Dropped Out	66	6
Stator Heater Fault	67	6
Inverter / Compressor Internal Fault	69	15
Compressor Dropped Out	71	6
Suction Over Temperature Event	72	15
Discharge Temp Out of Range Lockout	74	2 Hours
Maximum Power Mode-Temp	75	N/A
Fan Inverter Lockout	76	2 Hours
Maximum Power Mode-Comp Current	77	N/A
Compressor/Inverter Fault	79	15
Suction Over Temp Lockout	82	4 Hours
Low Pressure Lockout for 4 hours	83	4 Hours
High Pressure Lockout for 4 hours	84	4 Hours
Fan Inverter Temp Lockout	85	15
Fan Inverter Current Lockout	86	15
Inverter Temp Lockout	88	2 Hours
Compressor Inverter Overcurrent Lockout	89	15
Inverter VDC-Out Over Voltage Event	91	15
Inverter VDC-Out Under Voltage Event	92	15
230VAC Under Voltage Event	93	15
230VAC Over Voltage Event	94	15
High Current Lockout	95	2 Hours
VDC Under Voltage Lockout	96	2 Hours
VDC Over Voltage Lockout	97	2 Hours
High Torque Event	98	10
High Torque Lockout	99	2 Hours
- -	OFF	N/A

* Short Flashes indicate the first digit in the status code followed by long flashes indicating the second digit of the status code.

340326-101 REV. E

FINAL CHECKS

IMPORTANT: Before leaving job, be sure to do the following:

1. Ensure that all wiring is routed away from tubing and sheet metal edges to prevent rub-through or wire pinching.
2. Ensure that all wiring and tubing is secure in unit before adding panels and covers. Securely fasten all panels and covers.
3. Tighten service valve stem caps to 1/12-turn past finger tight.
4. Leave User's Manual with owner. Explain system operation and periodic maintenance requirements outlined in manual.
5. Fill out Dealer Installation Checklist and place in customer file.

CARE AND MAINTENANCE

For continuing high performance and to minimize possible equipment failure, periodic maintenance must be performed on this equipment.

Frequency of maintenance may vary depending upon geographic areas, such as coastal applications. See Owner's Manual for information.

PURON® (R-410A) REFRIGERANT QUICK REFERENCE GUIDE

- Puron refrigerant operates at 50-70 percent higher pressures than R-22. Be sure that servicing equipment and replacement components are designed to operate with Puron refrigerant.
- Puron refrigerant cylinders are rose colored.
- Recovery cylinder service pressure rating must be 400 psig, DOT 4BA400 or DOT BW400.
- Puron refrigerant systems should be charged with liquid refrigerant. Use a commercial type metering device in the manifold hose when charging into suction line with compressor operating.
- Manifold sets should be 700 psig high side and 180 psig low side with 550 psig low-side retard.
- Use hoses with 700 psig service pressure rating.
- Leak detectors should be designed to detect HFC refrigerant.
- Puron refrigerant, as with other HFCs, is only compatible with POE oils.
- Vacuum pumps will not remove moisture from oil.
- Do not use liquid-line filter driers with rated working pressures less than 600 psig.
- Do not leave Puron refrigerant suction line filter driers in line longer than 72 hours.
- Do not install a suction-line filter drier in liquid-line.
- POE oils absorb moisture rapidly. Do not expose oil to atmosphere.
- POE oils may cause damage to certain plastics and roofing materials.
- Wrap all filter driers and service valves with wet cloth when brazing.
- A factory-approved liquid-line filter drier is required on every unit.
- Do NOT use an R-22 TXV.
- If indoor unit is equipped with an R-22 TXV or piston metering device, it must be changed to a hard-shutoff Puron refrigerant TXV.
- Never open system to atmosphere while it is under a vacuum.
- When system must be opened for service, recover refrigerant, evacuate then break vacuum with dry nitrogen and replace filter driers. Evacuate to 500 microns prior to recharging.
- Do not vent Puron refrigerant into the atmosphere.
- Do not use capillary tube coils.
- Observe all **warnings**, **cautions**, and **bold** text.
- All indoor coils must be installed with a hard-shutoff Puron refrigerant TXV metering device.

©Bryant Heating & Cooling Systems 7310 W. Morris St. Indianapolis, IN 46231
Edition Date: 04/14

Catalog No. II288B−01

Manufacturer reserves the right to discontinue, or change at any time, specifications or designs without notice and without incurring obligations.

Replaces: New