619R*C
Cassette Ductless System
Sizes 09 to 18

Installation Instructions

NOTE: The images in this manual are for illustration purposes only. The actual model may differ slightly.

NOTE: Read the entire instruction manual before starting the installation.

TABLE OF CONTENTS

	PAGE
SAFETY CONSIDERATIONS	2
PARTS LIST	3
SYSTEM REQUIREMENTS	4
DIMENSIONS – INDOOR	5
CLEARANCES – INDOOR	6
INSTALLATION TIPS	7
INDOOR UNIT INSTALLATION	7
ELECTRICAL DATA	13
CONNECTION DIAGRAMS	13
START–UP	15
TROUBLESHOOTING	16

SAFETY CONSIDERATIONS

Installing, starting up, and servicing air−conditioning equipment can be hazardous due to system pressures, electrical components, and equipment location (roofs, elevated structures, etc.).

Only trained, qualified installers and service mechanics should install, start−up, and service this equipment.

Untrained personnel can perform basic maintenance functions such as cleaning coils. All other operations should only be performed by trained service personnel.

When working on the equipment, observe precautions in the literature and on tags, stickers, and labels attached to the equipment.

Follow all safety codes. Wear safety glasses and work gloves. Keep a quenching cloth and fire extinguisher nearby when brazing. Use care in handling, rigging, and setting bulky equipment.

Read these instructions thoroughly and follow all warnings or cautions included in the literature and attached to the unit. Consult the local building codes and National Electrical Code (NEC) for special requirements. Recognize safety information.

This is the safety−alert symbol ⚠. When you see this symbol on the unit and in instructions or manuals, be alert to the potential for personal injury. Understand these signal words: **DANGER**, **WARNING**, and **CAUTION**. These words are used with the safety−alert symbol. **DANGER** identifies the most serious hazards which **will** result in severe personal injury or death. **WARNING** signifies hazards which **could** result in personal injury or death. **CAUTION** is used to identify unsafe practices which **may** result in minor personal injury or product and property damage. **NOTE** is used to highlight suggestions which **will** result in enhanced installation, reliability, or operation.

⚠ WARNING

ELECTRICAL SHOCK HAZARD

Failure to follow this warning could result in personal injury or death.

Before installing, modifying, or servicing system, the main electrical disconnect switch must be in the OFF position. There may be more than 1 disconnect switch. Lock out and tag switch with a suitable warning label.

⚠ WARNING

EXPLOSION HAZARD

Failure to follow this warning could result in death, serious personal injury, and/or property damage.

Never use air or gases containing oxygen for leak testing or operating refrigerant compressors. Pressurized mixtures of air or gases containing oxygen can lead to an explosion.

⚠ CAUTION

EQUIPMENT DAMAGE HAZARD

Failure to follow this caution may result in equipment damage or improper operation.

Do not bury more than 36 in. (914 mm) of refrigerant pipe in the ground. If any section of pipe is buried, there must be a 6 in. (152 mm) vertical rise to the valve connections on the outdoor units. If more than the recommended length is buried, refrigerant may migrate to the cooler buried section during extended periods of system shutdown. This causes refrigerant slugging and could possibly damage the compressor at start−up.

PARTS LIST

Table 1—Parts List

PART NO.	PART NAME
1	Air flow louver (at air outlet)
2	Drain pump (drain water from the indoor unit)
3	Drain pipe (Field Supplied)
4	Air outlet
5	Air filter (inside grille/ceiling panel)
6	Air inlet
7	Grille/Ceiling panel (Required – sold separately)
8	Display panel
9	Remote controller
10	Refrigerant pipe (Field Supplied)

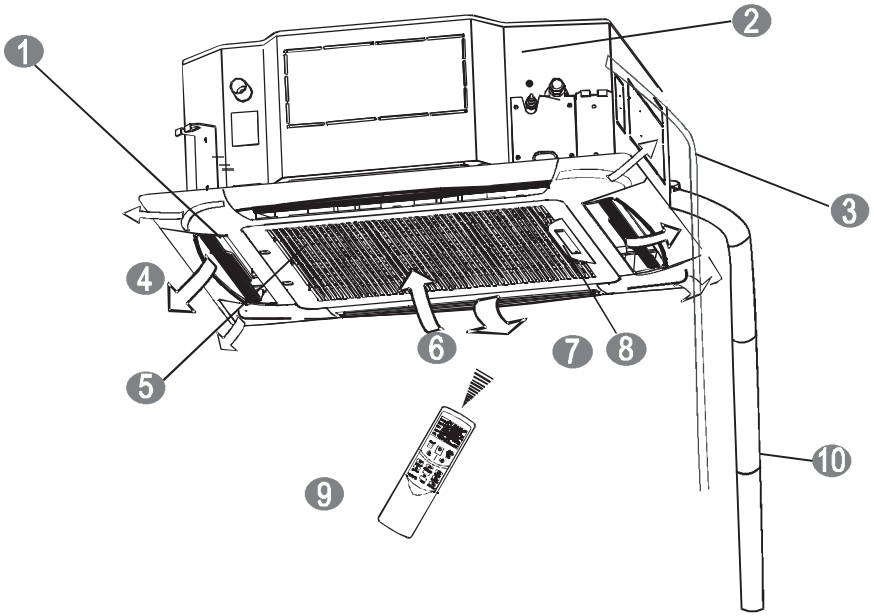

Fig. 1 – Parts List

Note:
– If the outdoor unit is higher than the indoor unit, prevent rain from flowing into the indoor unit, along the connection pipe, by creating a downward arc in the connection pipe before it enters the wall to the indoor unit. This ensures that rain drips from the connection pipe before entering the wall.
– Piping and the interconnecting wiring are field supplied.
– Fig.1 is only a sketch. Different models may differ slightly.

See Table 2 for the units covered in these installation instructions.

Table 2—Indoor Units

kBTUh	V–Ph–Hz	ID Model No.
9	208/230–1–60	619REQ009CBMA
12	208/230–1–60	619REQ012CBMA
18	208/230–1–60	619REQ018CBMA

SYSTEM REQUIREMENTS

Allow sufficient space for airflow and unit servicing. See Fig. 3 for the minimum required distances between the unit and the walls or ceilings.

PIPING

IMPORTANT: **Both refrigerant lines must be insulated separately.**

- Minimum refrigerant line length between the indoor and outdoor units is 10 ft. (3 m).
- Table 3 lists the pipe sizes for the indoor unit. Refer to the outdoor unit installation instructions for other allowed piping lengths and refrigerant information.

Table 3—Indoor Unit Pipe Sizes

SYSTEM SIZE			9K	12K	18K
Piping	Gas Pipe (size – connection type)	In (mm)	3/8 (9.52)	1/2 (12.7)	1/2 (12.7)
	Liquid Pipe (size – connection type)	In (mm)	1/4 (6.35)	1/4 (6.35)	1/4 (6.35)

WIRING

All wires must be sized per NEC (National Electrical Code) or CEC (Canadian Electrical Code) and local codes. Use the Electrical Data table MCA (minimum circuit amps) and MOCP (maximum over current protection) to correctly size the wires and the disconnect fuse or breakers respectively.

Per the caution note, only stranded copper conductors with a 600 volt rating and double insulated copper wire must be used. The use of BX cable is not recommended.

IMPORTANT: The use of BX cable is not recommended.

Recommended Connection Method for Power and Communication Wiring – Power and Communication Wiring:

The main power is supplied to the outdoor unit. The field supplied 14/3 power/communication wiring from the outdoor unit to the indoor unit consists of four (4) wires and provides the power for the indoor unit. Two wires are high voltage AC power. One wire is communication wiring and the other is a ground wire.

Recommended Connection Method for Power and Communication Wiring (To minimize communication wiring interference)

Power Wiring:

The main power is supplied to the outdoor unit. The field supplied connecting cable from the outdoor unit to the indoor unit consists of three (3) wires and provides the power for the indoor unit. Two wires are high voltage AC power and one is a ground wire.

Communication Wiring:

A separate shielded stranded copper conductor only, with a 600 volt rating and double insulated copper wire, must be used as the communication wire from the outdoor unit to the indoor unit. Please use a separate shielded 16GA stranded control wire.

⚠ CAUTION

EQUIPMENT DAMAGE HAZARD

Failure to follow this caution may result in equipment damage or improper operation.

- Wires should be sized based on NEC and local codes.
- Use copper conductors only with a 600 volt rating and double insulated copper wire.

DIMENSIONS – INDOOR

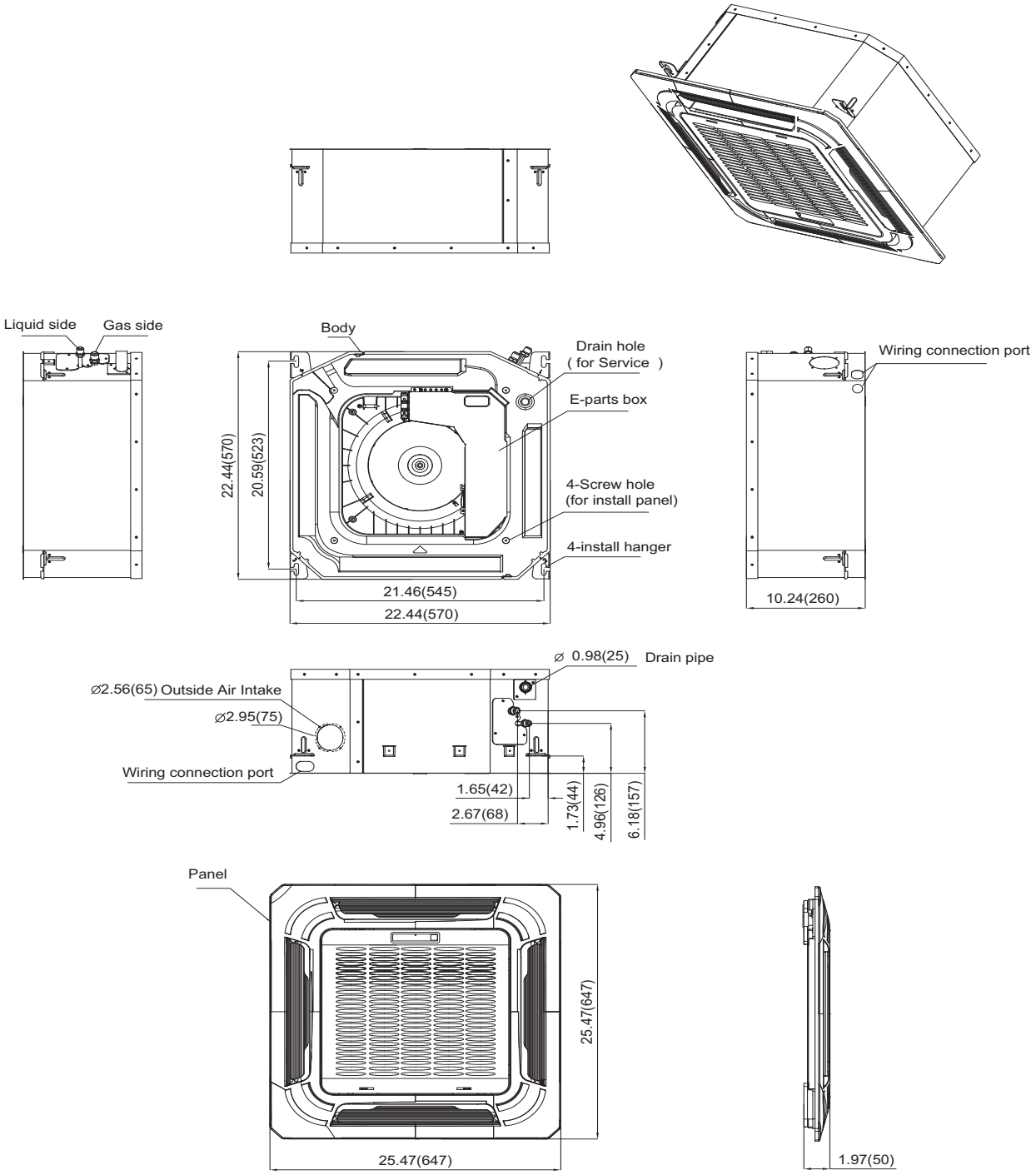

Fig. 2 – Indoor Unit

Table 4—Dimensions Indoor

UNIT SIZE		9		12		18	
		BODY	PANEL	BODY	PANEL	BODY	PANEL
DIMENSIONS							
Height	in(mm)	10.24 (260)	1.97 (50)	10.24 (260)	1.97 (50)	10.24 (260)	1.97 (50)
Width	in(mm)	22.44 (570)	25.47 (647)	22.44 (570)	25.47 (647)	22.44 (570)	25.47 (647)
Depth	in(mm)	22.44 (570)	25.47 (647)	22.44 (570)	25.47 (647)	22.44 (570)	25.47 (647)
PACKING							
Height	in(mm)	11.42 (290)	4.84 (123)	11.42 (290)	4.84 (123)	11.42 (290)	4.84 (123)
Width	in(mm)	25.79 (655)	28.15 (715)	25.79 (655)	28.15 (715)	25.79 (655)	28.15 (715)
Depth	in(mm)	25.79 (655)	28.15 (715)	25.79 (655)	28.15 (715)	25.79 (655)	28.15 (715)
Weight–Gross	lbs(kg)	41.88 (19)	9.92 (4.5)	41.88 (19)	9.92 (4.5)	46.3 (21)	9.92 (4.5)
Weight–Net	lbs(kg)	35.27 (16)	5.51 (2.5)	35.27 (16)	5.51 (2.5)	39.68 (18)	5.51 (2.5)

CLEARANCES – INDOOR

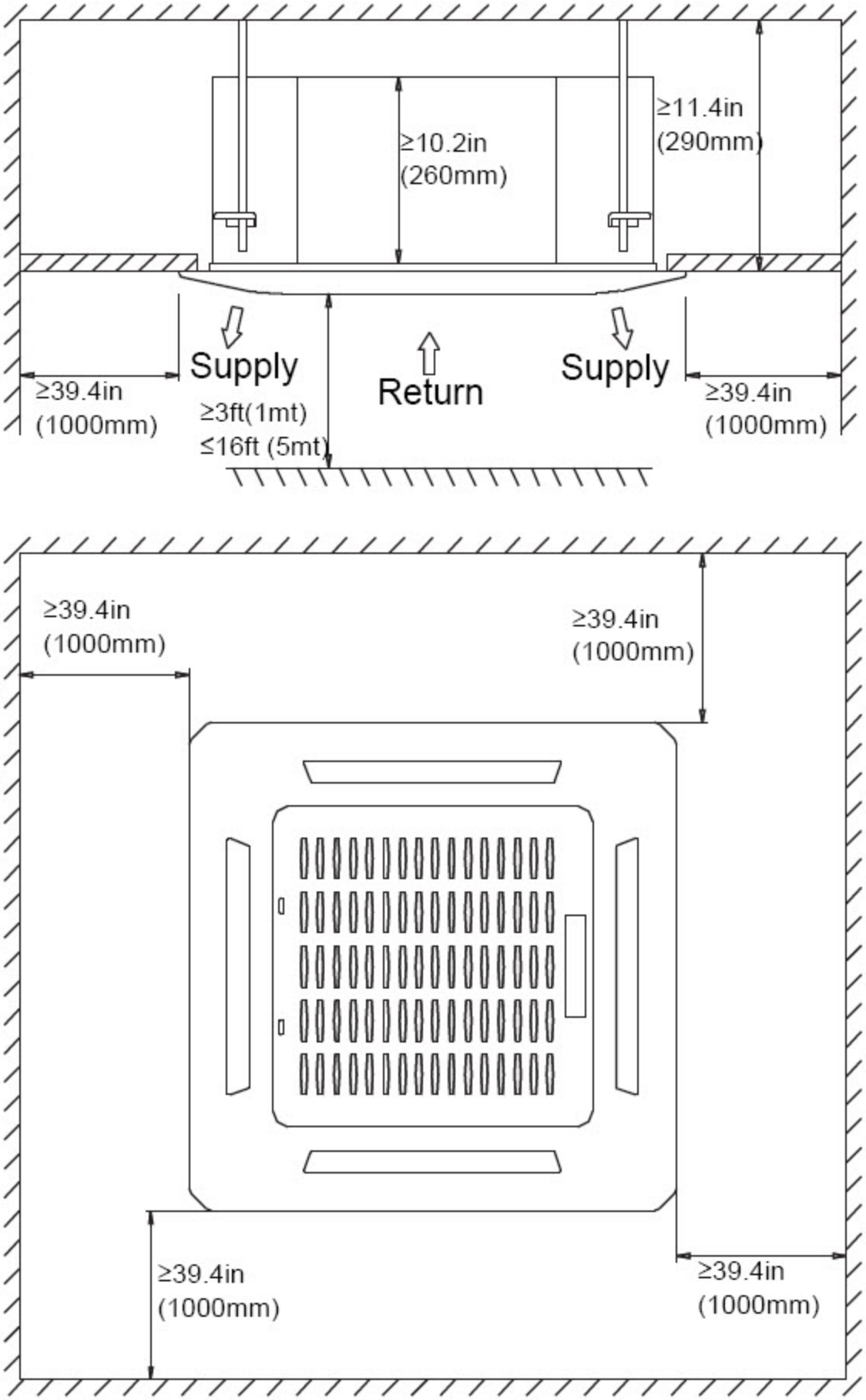

Fig. 3 – Cassette Unit Clearance

INSTALLATION TIPS

Indoor Unit

Installation locations include:

- A location where no obstacles exist near the inlet and outlet areas.
- A location which can bear the indoor unit's weight is critical.
- Do not install the indoor units near a direct source of heat such as direct sunlight or a heating appliance.
- A location which provides appropriate clearances (see Fig. 3).
- Do not install the indoor unit in a location with special environmental conditions. For those applications, contact your Ductless Systems representative.

INDOOR UNIT INSTALLATION

1. Obstructions should be removed from the indoor unit's intake or outlet vents so air can flow throughout the room.
2. Ensure the installation is in accordance with the schematic diagram's required clearances.
3. Select an install site that can withstand four times the indoor unit's weight and would not increase the operating noise.
4. Ensure the unit is level.
5. Select a location where condensated coagulated water can drain easily away from the outdoor unit.
6. Ensure there is enough space for care and maintenance. Ensure the height between the indoor unit and ground is ≥ 3ft. (1m) or ≤ 16ft. (5m).
7. Ensure the install site can withstand a weight four times of the unit's. If not, reinforce the site prior to installation. Refer to the install cardboard to determine where the location should be reinforced.

IMPORTANT: To guarantee a good performance, the unit must be installed by professional personnel in accordance with this manual.

IMPORTANT: Drilling holes in the ceiling must be performed by professional personnel.

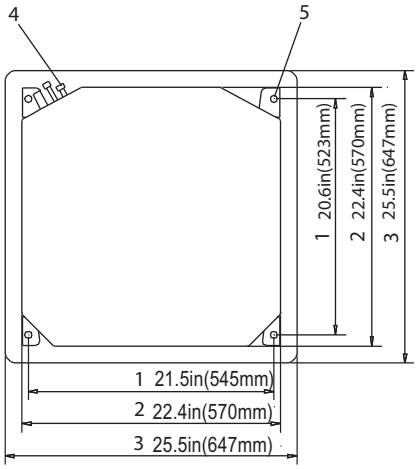

Fig. 4 — Drilling Holes

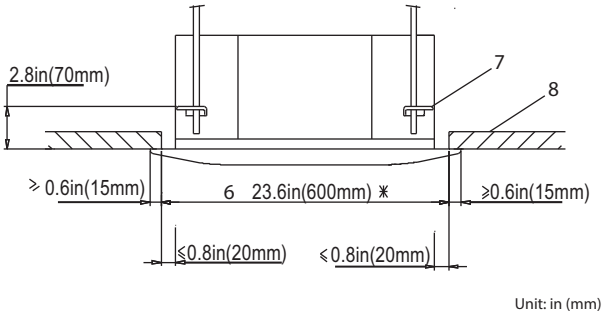

Fig. 5 — Drilling Holes

1. Installation hook pitch dimensions
2. Indoor unit dimensions
3. Decoration panel dimensions
4. Refrigerant piping
5. Installation hook (X4)
6. Ceiling opening dimensions
7. Hanger bracket
8. False ceiling

NOTE: Adjust the position to ensure the gaps between the indoor unit and the four sides of the false ceiling are even. The indoor unit's lower part should sink into the false ceiling roughly 0.9in (24mm).

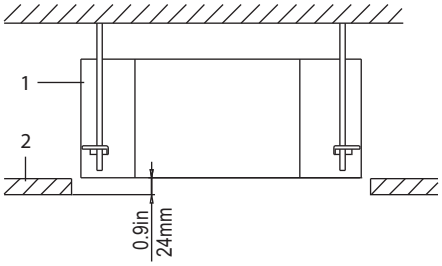

Fig. 6 — Drilling Holes

1. Indoor unit
2. False ceiling

NOTE: Installation is possible with a ceiling dimension of 23.62 in. (600m) (marked with *). However to achieve a ceiling–panel overlapping dimension of 0.59 in (15mm), the spacing between the ceiling and the unit should be 0.79 in. (20mm) or less. If the spacing between the ceiling and the unit is over 0.79 in. (20mm), attach the sealing material in the part or recover the ceiling.

INDOOR UNIT MAIN BODY INSTALLATION

1. Prepare the ceiling opening needed for installation where applicable (for existing ceilings).
   a. Create the ceiling opening required for installation. From the side of the opening to the casing outlet, implement the refrigerant and drain piping and wiring for the remote controller (unnecessary for the wireless type). Refer to each piping or wiring section.
   b. After creating an opening in the ceiling, it may be necessary to reinforce the ceiling beams to keep the ceiling level and to prevent it from vibrating. Consult the builder for details.
2. Install the installation hooks. Use either a M8 or M10 bolt.
   a. Use expansible hooks, sunken anchors or other field supplied parts to reinforce the ceiling to bear the unit's weight.
   b. Adjust the clearance from the ceiling before proceeding further. For an installation example, see Fig. 7.

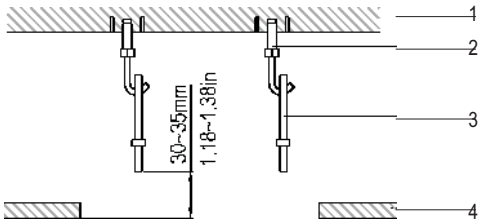

Fig. 7 — Installation Clearances

(1.) Ceiling slab
(2.) Expansible hook (optional)
(3.) Installation hook (optional)
(4.) False ceiling

NOTE: For a non−standard installation, contact your dealer for details.

When installing optional accessories, review the optional accessories list in the installation manual. Depending on field conditions, it may be easier to install optional accessories before the indoor unit is installed (except for the decoration panel). However, for an existing ceiling, install the fresh air inlet component kit (field Supplied) before installing the unit.

3. Install the indoor unit temporarily.
   a. Attach the hanger bracket to the suspension bolt. Be sure to fix it securely by using a nut and washer from the upper and lower sides of the hanger bracket.
   b. Secure the hanger bracket (see Fig. 8).
   -

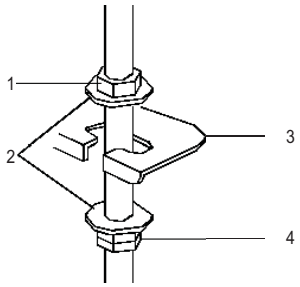

Fig. 8 — Secure the Hanger Bracket

(1.) Nut (field supply)
(2.) Washer (field supply)
(3.) Hanger bracket
(4.) Double nuts (field supply, tighten)

4. Adjust the unit to the right position for installation.
5. Check if the unit is horizontally leveled.
   a. Do not install the unit tilted. The indoor unit is equipped with a built−in drain pump and a float switch.

NOTE: If the unit is tilted against the direction of the condensate flow (the drain piping side is raised), the float switch may malfunction and cause water to drip.

   b. Check if the unit is level at all four corners with a water level or a water−filled vinyl tube (see Fig. 9).

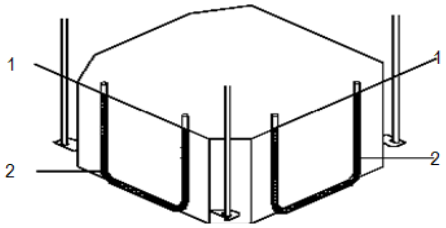

Fig. 9 — Ensure unit is level

(1.) Water level
(2.) Vinyl tube

DRAIN PIPING WORK

Drain Piping Installation

Install the drain piping (see Fig. 10) and take steps to eliminate condensation. Improperly rigged piping could lead to leaks and eventually wet furniture and belongings.

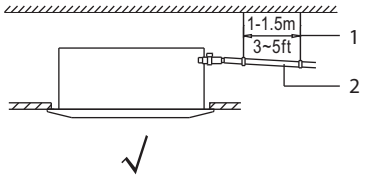

Fig. 10 — Drain Piping Installation

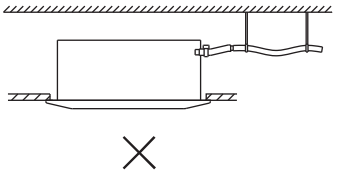

Fig. 11 — Hanging Bar

(1.) Hanging bar

(2.) ≥1/100 gradient

Install the Drain Pipes

IMPORTANT: Observe all local sanitary codes when installing condensate drains.

- Keep piping as short as possible and slope it downwards at a gradient of at least 1/100 so that air does not remain trapped inside the pipe.
- Keep the pipe size equal to or greater than that of the connecting pipe (PVC pipe, nominal diameter 0.8 in. (20mm), outside diameter .98 in. (25 mm)).
- Push the drain hose as far as possible over the drain socket, and tighten the metal clamp securely.

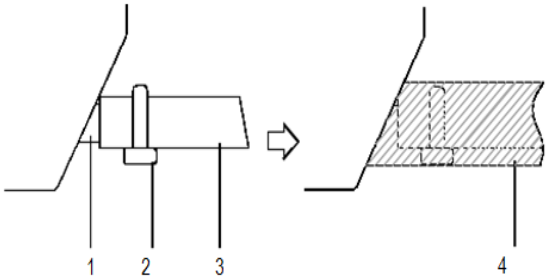

Fig. 12 — Push the Drain Hose

1. Drain socket (attached to the unit)
2. Metal clamp
3. Drain hose
4. Insulation (field supply)
   a. Insulate the drain hose inside the building.
   b. If the drain hose cannot be sufficiently set on a slope, fit the hose with the drain raising piping (field supplied).
   c. Ensure the heat insulation work is executed on the following two spots to prevent any possible water leakage due to dew condensation:
      (1.) Indoor drain pipe
      (2.) Drain socket.

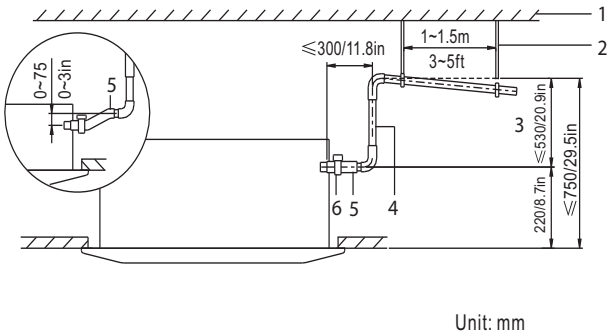

Fig. 13 — Drain Setup Pipe

1. Ceiling slab
2. Hanger bracket
3. Adjustable range
4. Drain raising pipe
5. Drain hose
6. Metal clamp

– Connect the drain hose to the drain raising pipes, and insulate them.

– Connect the drain hose to the drain outlet on the indoor unit, and tighten it with the clamp.

NOTE: Drain setup pipe:

- The install height of the drain raising pipe should be less than 21 in. (530 mm).
- The drain raising pipe should form a right angle with the unit. The distance to the unit should not exceed 11.81 in. (300 mm).
- To prevent air bubbles, install the drain hose level at an angle slightly tilted upward (</3 in / 75 mm).
- The drain hose incline should be 3 in (75 mm) or less so the drain socket does not have to withstand additional force.
- To ensure a downward slope of 1:100, install the hanging bars every 3.3 ft. (1m) to /4.9 ft./(1.5 m).
- When unifying the multiple drain pipes, install the pipes as shown in Fig. 14. Select the converging drain pipes whose gauge is suitable for the operating capacity of the unit.

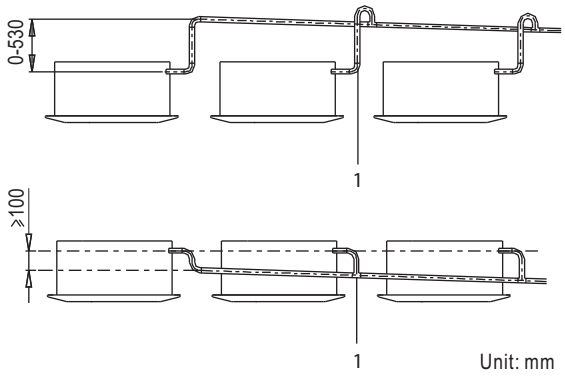

1 T-joint converging drain pipes

Fig. 14 — T–Joint Converging Drain Pipes

- Connect the drain hose to the drain raising pipes, and insulate them.
- Connect the drain hose to the drain outlet on the indoor unit, and tighten it with the clamp.

DRAIN PIPE TESTING

After the piping work is finished, check if the drainage flows smoothly.

Add approximately 1 liter of water **gradually** through the air discharge outlet. See Fig. 15 for the water adding method.

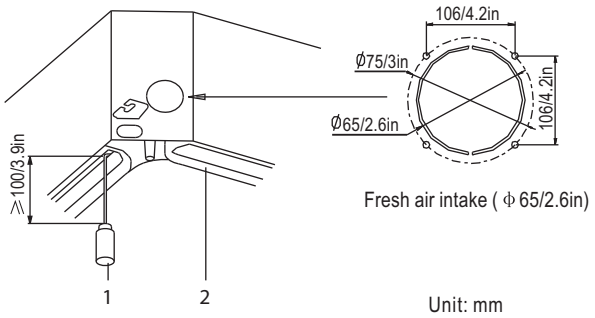

Fig. 15 — Water Adding Method

1. Plastic watering can (tube) should be about 3.9 in (100 mm).
2. Water receiver.

When the electric wiring work is complete, check the drainage flow during COOL running.

Electrical Wiring

1. Remove the indoor unit control box lid.
2. Follow the "Wiring Diagram" label attached to the indoor unit's control box lid to wire the outdoor unit, indoor unit and the wired remote controller.
3. Securely fix the wires with a field supplied clamp.
4. Attach the outdoor unit cover.

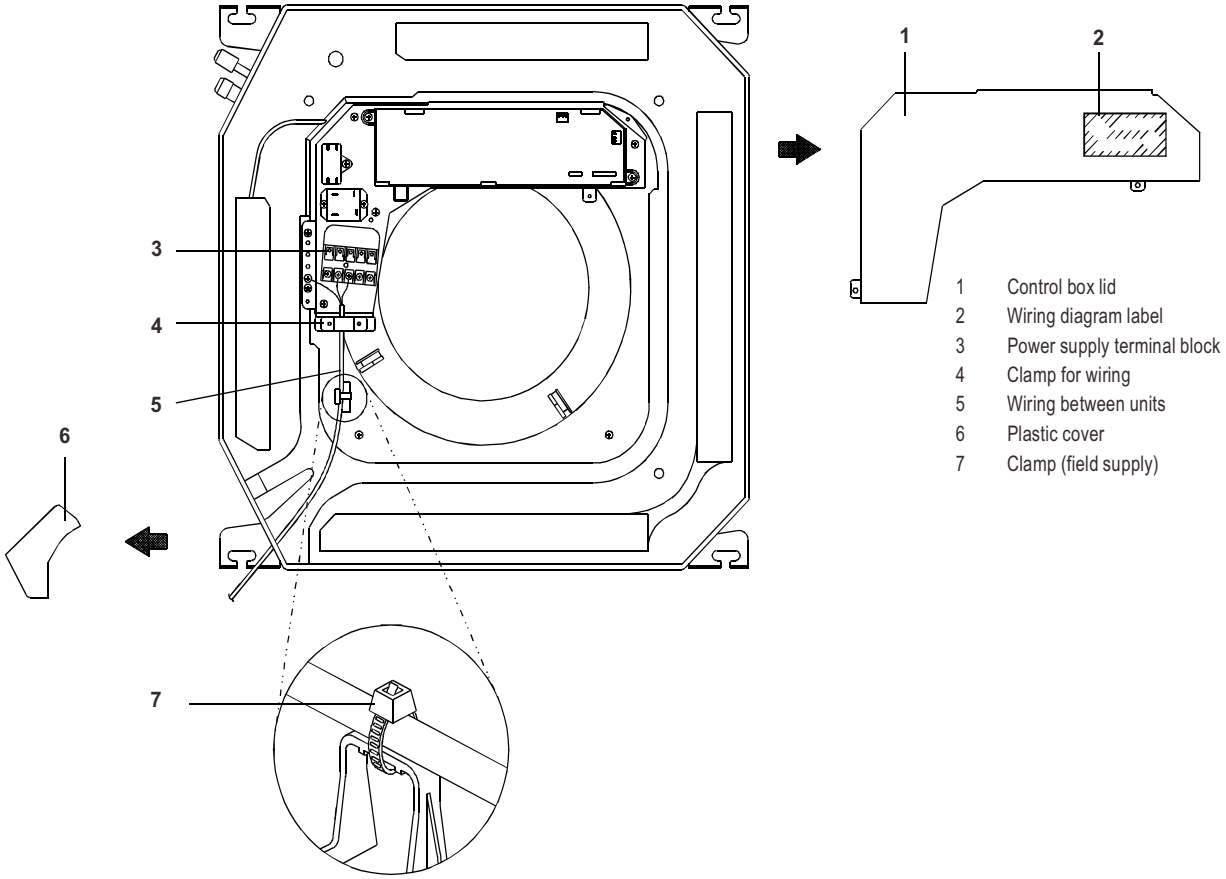

Fig. 16 — Wiring/Control Box

INSTALLATION OF THE DECORATION PANEL

Detach the intake grill

1. Slide the two grille hooks toward the middle of the decoration panel.

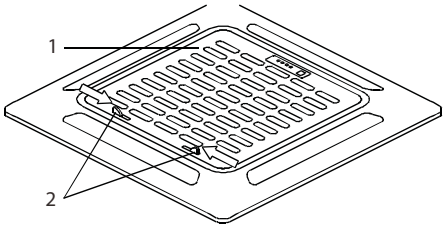

1 Intake grille
2 Grille hook

Fig. 17 — Intake Grille

2. Open the intake grille and remove.

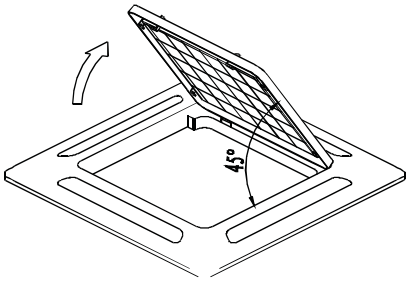

Fig. 18 — Open Intake Grille

Install the decoration panel

1. Align the indication marks "△" on the decoration panel to the indication marks "△" on the unit.
2. Attach the decoration panel to the unit with the supplied screws (see Fig. 19).

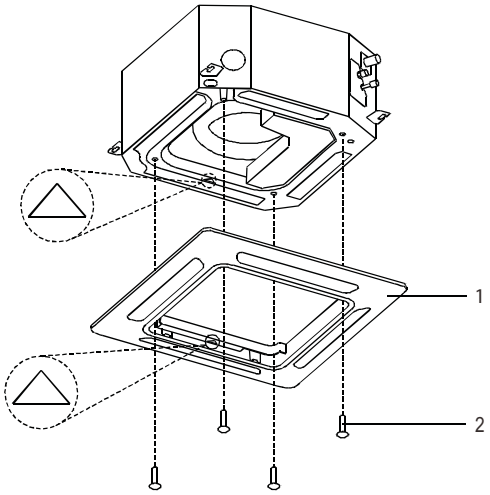

1 Decoration panel
2 Screws (M5)(supplied with the panel)

Fig. 19 — Attach the Decoration Panel

3. After installing the decoration panel, ensure there is no space between the unit body and the decoration panel. Otherwise air may leak through the gap and cause dewdrops (see Fig. 20).

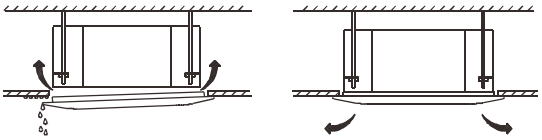

Fig. 20 — Eliminate Space

4. Mount the intake grille. Ensure the buckles at the back of the grille are properly seated in the panel's groove.

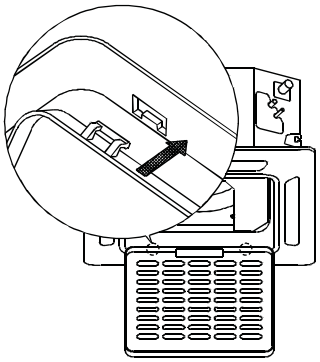

Fig. 21 — Mount the Intake Grille

5. Connect the decoration panel's two wires to the unit's mainboard (see Fig. 23).

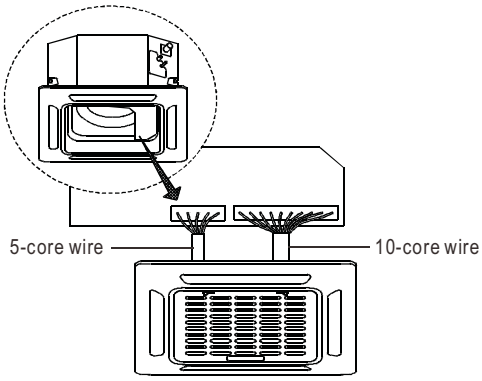

Fig. 22 — Connect the two wires

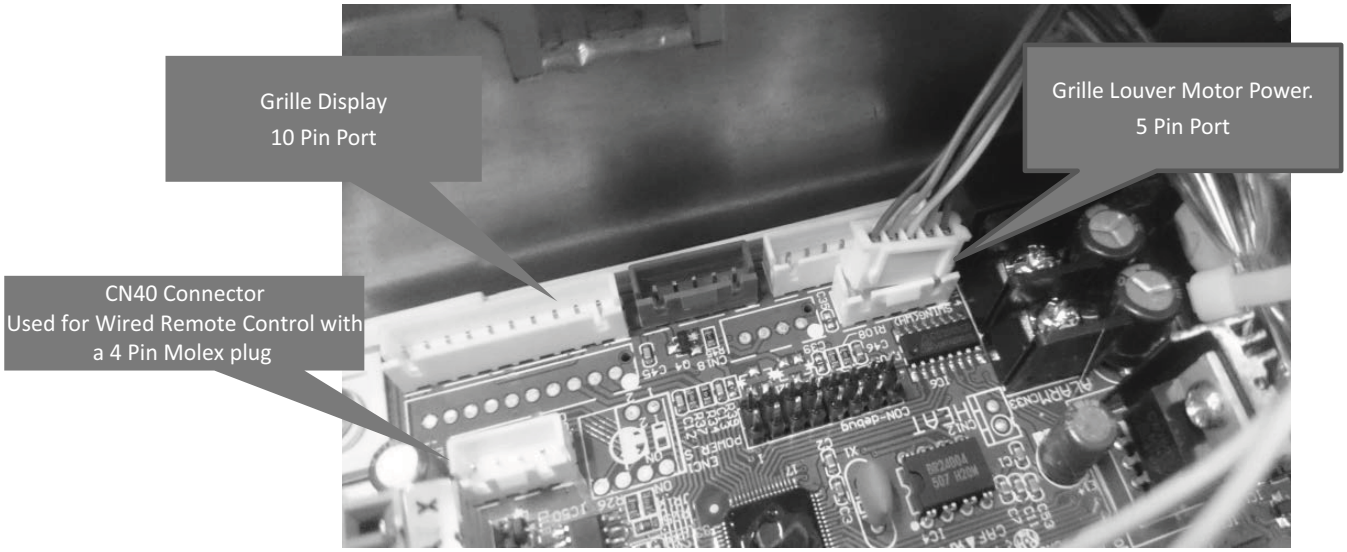

Fig. 23 — Panel Cassette Connections

6. Fasten the control box lid with two screws.

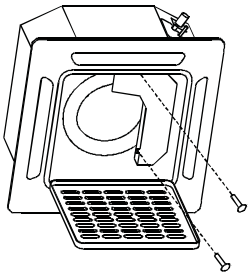

Fig. 24 — Fasten the Control Box Lid

7. Close the intake grille, and close the two grille hooks.

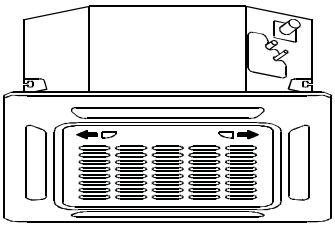

Fig. 25 — Close the Intake Grille

ELECTRICAL DATA

Table 5—Electrical Data

UNIT SIZE	OPER. VOLTAGE MAX / MIN*	INDOOR FAN				MAX FUSE CB AMP
		V–PH–HZ	FLA	HP	W	
9	253 / 187	208–230/1/60	0.146	0.061	46	Refer to outdoor unit installation instructions – Indoor unit powered by the outdoor unit
12			0.146	0.061	46	
18			0.146	0.061	46	

*Permissible limits of the voltage range at which the unit will operate satisfactorily.

LEGEND

FLA – Full Load Amps

CONNECTION DIAGRAMS

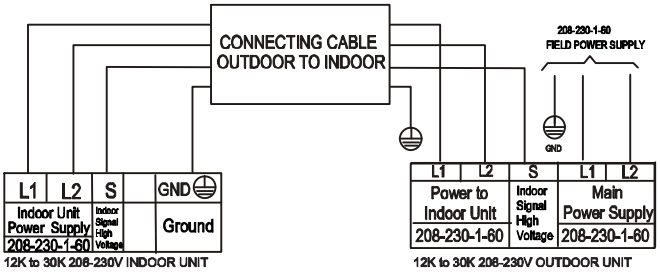

A150634

Fig. 26 – Connection Diagrams

Notes:
1. Do not use the thermostat wire for any connection between indoor and outdoor units.
2. All connections between the indoor and outdoor units must be as shown. **The connections are sensitive to polarity and will result in a fault code.**

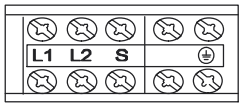

A150635

Fig. 27 – Control and Power Wiring on Indoor Unit

INSTALL ALL POWER, INTERCONNECTING WIRING, AND PIPING TO INDOOR UNIT

1. Run interconnecting piping and wiring from the outdoor unit to the indoor unit.
2. Connect wiring from the outdoor unit per the connection diagram (see Fig. 26).
3. Replace the field wiring cover and close the indoor unit front cover.
4. Connect the refrigerant piping and a drain line outside of the indoor unit. Complete the pipe insulation at the flare connection then fasten the piping and wiring to the wall as required. Completely seal the hole in the wall.
5. Piping:
   a. Cut the pipe, with a pipe cutter, at 90 degrees (see Fig. 28).
   b. Remove the service connection, if provided with the unit.

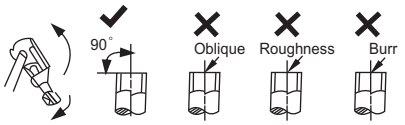

A150767

Fig. 28 — Pipe Cutting

   c. Remove all the burrs from the cut cross section of the pipe avoiding any burrs inside the tubes.
   d. Remove the flare nuts attached to the indoor and outdoor units.
   e. Install the correct size flare nut onto the tubing and make the flare connection. See Table 6 for the flare nut spaces.

Table 6—Flare Nut Spacing

OUTER DIAM. (mm)	A (mm)	
	Max.	Min.
Ø 1/4" (6.35)	0.05 (1.3)	0.03 (0.7)
Ø 3/8" (9.52)	0.06 (1.6)	0.04 (1.0)
Ø 1/2" (12.7)	0.07 (1.8)	0.04 (1.0)
Ø 5/8" (15.88)	0.09 (2.2)	0.08 (2.0)

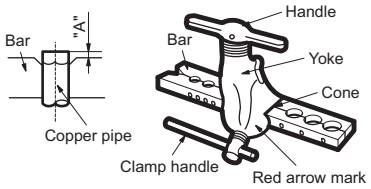

A150768

Fig. 29 — Flare Nut Spacing

   f. Apply a small amount of refrigerant oil to the flare connection on the tubing.
   g. Align the center of the pipes and/or service valve.

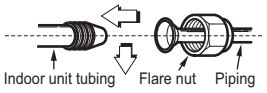

A150769

Fig. 30 — Align Pipe Center

   h. Connect both the liquid and gas piping to the indoor unit.
   i. Tighten the flare nut using a torque wrench as specified in Table 7.

Table 7—Tightening Torque

PIPE DIAMETER INCH (mm)	TIGHTENING TORQUE	
	Ft–lb	N–m
Ø1/4" (6.35)	10 to 13	13.6 to 17.6
Ø3/8" (9.52)	24 to 31	32.5 to 42.0
Ø1/2" (12.7)	37 to 46	50.1 to 62.3
Ø5/8" (15.88)	50 to 60	67.7 to 81.3

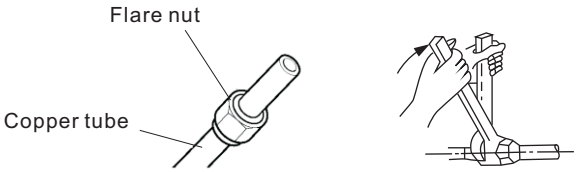

A150770

Fig. 31 — Tighten the Flare Nut

   6. Connect the drain line. The drain line must not have a trap anywhere in its length. The drain line must pitch downwards. The drain line must be insulated up to the outside wall.

NOTE: For applications where gravity cannot be used for drainage, a condensate pump accessory is available. Consult the condensate pump Installation Instructions for more information.

WIRELESS REMOTE CONTROL INSTALLATION

Mounting Bracket (if installed on the wall)

1. Use the two screws supplied with the control to attach the mounting bracket to the wall in a location selected by the customer and within operating range.
2. Install the remote control batteries.
3. Place the remote control into the remote control mounting bracket.
4. For remote control operation, refer to the unit owner's manual.

WIRED REMOTE CONTROLLER

For setup instructions, refer to the wired controller installation manual. Refer to Fig. 24 for the 4 and 5 Pin connections for the different wired remote controllers.

⚠ CAUTION

UNIT DAMAGE HAZARD

Failure to follow this caution may result in equipment damage or improper operation.

Never use the system compressor as a vacuum pump.

Refrigerant tubes and the indoor coil should be evacuated using the recommended deep vacuum method (500 microns). The alternate triple evacuation method may be used if the procedure outlined below is followed. Always break a vacuum with dry nitrogen.

FINAL TUBING CHECK

IMPORTANT: Ensure certain factory tubing on the indoor unit has not shifted during shipment. Ensure tubes are not rubbing against each other or any sheet metal. Pay close attention to the feeder tubes, making sure the wire ties on the feeder tubes are secure and tight.

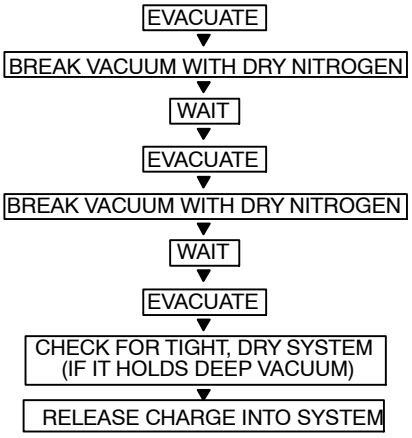

A95425

Fig. 32 — Triple Evacuation Method

START–UP

Test Operation

Perform a test operation after completing a gas leak and electrical safety check.

1. Press the **ON/OFF** button on the remote control to begin testing.

NOTE: A protection feature prevents the air conditioner from being activated for approximately 3 to 4 minutes.

2. Press **MODE** and select **COOLING**, **HEATING**, **FAN** mode to check if all functions work correctly.
3. To run the test using the manual button in the indoor unit:
   (3.) Open the indoor unit's front panel;
   (4.) Press the manual switch once to energize the unit. The set conditions of the manual operation are as follows:
   · Preset set point: 76°F (24°C)
   · Fan speed: **AUTO**
   · Discharge air direction: Pre–set position based on operation in **COOL** or **HEAT** mode.
4. Be sure to set the manual switch to **OFF** (by pressing it twice again) after finishing the test operation.

SYSTEM CHECKS

1. Conceal the tubing where possible.
2. Ensure the drain tube slopes downward along its entire length.
3. Ensure all tubing and connections are properly insulated.
4. Fasten the tubes to the outside wall, when possible.
5. Seal the hole through which the cables and tubing pass.

INDOOR UNIT

1. Do all the remote control buttons function properly?
2. Do the display panel lights work properly?
3. Does the air deflection louver function properly?
4. Does the drain work?

OUTDOOR UNIT

1. Are there unusual noises or vibrations during operation?

Explain Following Items To Customer (with the aid of the Owner's Manual):

1. How to turn the air conditioner on and off; selecting **COOLING**, **HEATING** and other operating modes; setting a desired temperature; setting the timer to automatically start and stop the air conditioner operation; and all other features of the remote control and display panel.
2. How to remove and clean the air filter.
3. How to set air deflection louver.
4. Explain care and maintenance.
5. Present the owner's manual and installation instructions to customer.

TROUBLESHOOTING

For ease of service, the systems are equipped with diagnostic code display LEDs on both the indoor and outdoor units. The outdoor diagnostic display consists of two LEDs (Red and Green) on the outdoor unit board and is limited to a few errors.

The indoor diagnostic display is a combination of flashing LEDs on the display panel or the front of the unit. If possible, always check the diagnostic codes displayed on the indoor unit first.

The diagnostic codes displayed on the indoor unit are listed in Table 8.

INDOOR UNIT DIAGNOSTIC GUIDES

Table 8—Indoor Unit Diagnostic Guides

OPERATION LAMP	TIMER LAMP	DISPLAY	LED STATUS
☆1 time	X	E0	Indoor unit EEPROM error
☆ 2 times	X	E1	Communication malfunction between indoor and outdoor units
☆4 times	X	E3	Indoor fan speed has been out of control
☆5 times	X	E4	Indoor room temperature sensor T1 open circuit or short circuit
☆6 times	X	E5	Evaporator coil temperature sensor T2 open circuit or short circuit
☆7 times	X	EC	Refrigerant leakage detection
☆8 times	X	EE	Water−level alarm malfunction
☆1 time	O	F0	Current overload protection
☆2 times	O	F1	Open circuit or short circuit of outdoor ambient temperature sensor T4
☆3 times	O	F2	Open circuit or short circuit of condenser coil temperature sensor T3
☆4 times	O	F3	Open circuit or short circuit of Compressor discharge temperature sensor T5
☆5 times	O	F4	Outdoor unit EEPROM error
☆6 times	O	F5	Outdoor fan speed has been out of control
☆7 times	O	F6	T2B sensor error
☆8 times	O	F7	Lifting−panel communication error
☆9 times	O	F8	Lifting−panel malfunction
☆10 times	O	F9	Lifting−panel is not closed
☆1 time	☆	P0	IPM malfunction
☆2 times	☆	P1	Over voltage or over low voltage protection
☆3 times	☆	P2	High temperature protection of compressor top
☆4 times	☆	P3	Outdoor low temperature protection
☆5 times	☆	P4	Inverter compressor drive error
☆6 times	☆	P5	Mode conflict
☆7 times	☆	P6	Compressor low−pressure protection
☆8 times	☆	P7	Outdoor IGBT temperature sensor error

O (light) X (off) ☆ (flash)

For additional diagnostic information, refer to the *Service Manual.*

©2016 Bryant Heating & Cooling Systems • 7310 W. Morris St. • Indianapolis, IN 46231
Edition Date: 08/16

Catalog No. II619RC−03

Manufacturer reserves the right to discontinue, or change at any time, specifications or designs without notice and without incurring obligations.

Replaces: II−619RC−538PR−02