ECONOMI$ER X
FACTORY-INSTALLED OPTION
LOW LEAK ECONOMIZER
FOR 2-SPEED INDOOR FAN CONTROL UNITS

bryant®

Installation, Setup & Troubleshooting Supplement

This document is a supplemental installation instruction for the factory-installed EconoMi$er X (low leak economizer) option. It is to be used with the base unit Installation Instructions for 580J/558J, 548J, 581J/551J and 549J 2-Stage cooling units, sizes 08 – 30. Units equipped with the EconoMi$er X option are identified by an indicator in the unit's model number (see the unit's nameplate). Use Table 1 (on page 2) to identify whether or not a given unit is equipped with the factory-installed EconoMi$er X.

NOTE: Read the entire instruction manual before starting the installation.

TABLE OF CONTENTS

SAFETY CONSIDERATIONS 2
GENERAL 2
Identifying Factory Option 2
EconoMi$er X 3
Unit Installation 3
W7220 Economizer Controller 3
User Interface 4
Menu Structure 4
CONNECTIONS AND APPLICATIONS 9
W7220 Economizer Module Wiring 9
ECONOMIZER CONTROL CONFIGURATIONS . . . 10
Enthalpy Changeover Control 10
Enthalpy Settings 10
Enthalpy Control Sensor Configuration 11
Demand Control Ventilation 12
Economizer Occupancy Control 13
HARDWARE 14
Actuators 14
Supply Air Temperature Sensor 14
Outside Air Temperature Sensor 14
Enthalpy Control Sensor Configuration 14
OPERATING SEQUENCES 16
2-Speed Fan Motor 16
W7220 Economizer Control 16
Base Unit Controls 16
Cooling, Unit with EconoMi$er X without CO_2 16
Stage 3 Cooling 18
Heating with EconoMi$er X 18
Demand Control Ventilation 18
SETUP AND CONFIGURATION 18
Initial Menu Display 18
Time-out and Screensaver 18
CHECKOUT 19
Status 19
Calibration of Sensors 19
Resetting All Defaults 19
TROUBLESHOOTING 19
Power Up Delay 19
Power Loss (Outage or Brownout) 19
Alarms 19
Clearing Alarms 20
CONTROL SET POINT AND CONFIGURATION LOG 22

SAFETY CONSIDERATIONS

Improper installation, adjustment, alteration, service, maintenance, or use can cause explosion, fire, electrical shock or other conditions which may cause personal injury or property damage. Consult a qualified installer, service agency, or your distributor or branch for information or assistance. The qualified installer or agency must use factory-authorized kits or accessories when modifying this product. Refer to the individual instructions packaged with the kits or accessories when installing.

Follow all safety codes. Wear safety glasses and work gloves. Use quenching cloths for brazing operations and have a fire extinguisher available. Read these instructions thoroughly and follow all warnings or cautions attached to the unit. Consult local building codes and appropriate national electrical codes (in USA, ANSI/NFPA70, National Electrical Code (NEC); in Canada, CSA C22.1) for special requirements.

It is important to recognize safety information. This is the safety-alert symbol ⚠. When you see this symbol on the unit and in instructions or manuals, be alert to the potential for personal injury.

Understand the signal words DANGER, WARNING, CAUTION, and NOTE. These words are used with the safety-alert symbol.

DANGER identifies the most serious hazards which **will** result in severe personal injury or death. WARNING signifies hazards which **could** result in personal injury or death.

CAUTION is used to identify unsafe practices, which **may** result in minor personal injury or product and property damage.

NOTE is used to highlight suggestions which **will** result in enhanced installation, reliability, or operation.

⚠ WARNING

ELECTRICAL SHOCK HAZARD

Failure to follow this warning could cause personal injury or death.

Before performing service or maintenance operations on unit, always turn off main power switch to unit and install lock(s) and lockout tag(s). Unit may have more than one power switch. Ensure electrical service to rooftop unit agrees with voltage an amperage listed on the unit rating plate.

⚠ CAUTION

CUT HAZARD

Failure to follow this caution may result in personal injury.

Sheet metal parts may have sharp edges or burrs. Use care and wear appropriate protective clothing, safety glasses and gloves when handling parts and servicing air conditioning equipment.

GENERAL

Identifying Factory Option

NOTE: This supplement only applies to units that meet the criteria detailed in Table 1. If the unit does not meet that criteria, discard this document.

Table 1 – Model-Size / EconoMi$er X Option Indicator

Model / Sizes	Position in Model Number	EconoMi$er FIOP Indicator
580J/558J / 08–16	14	U or W
580J/558J / 17–30	14	U, V, W or X
548J / 08–14	14	U or W
548J / 17–24	14	U, V, W or X
581J/551J / 08–14	14	U or W
581J/551J / 17–28	14	U, V, W or X
549J / 08–12	14	U or W

NOTE: See Fig. 1 for an example of typical Model Number Nomenclature.

In addition to criteria in Table 1, all units equipped with a factory-installed EconoMi$er X display either a D, E or F in the 17th position of the model number to indicate that the unit is equipped with the factory-installed VFD (Variable Frequency Drive) option for 2-speed indoor fan control. The VFD option is required for units equipped with EconoMi$er X. For detailed information on the VFD see the Variable Frequency Drive (VFD) Installation, Setup & Troubleshooting Supplement.

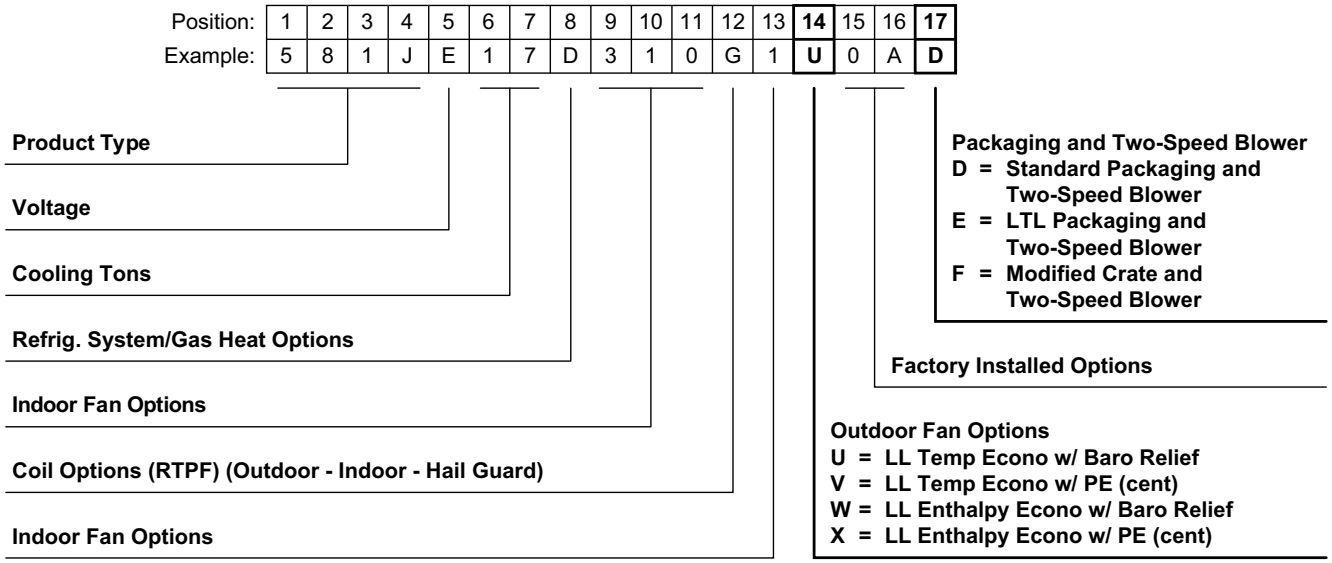

Fig. 1 - Model Number Nomenclature Example

EconoMi$er X

EconoMi$er X is a low leak economizer system which is available for 2-stage cooling units equipped with the 2-speed Variable Frequency Drive (VFD) system.

The factory-installed option consists of:

- Low leak economizer damper assembly
- Direct-drive damper actuator with local equipment bus communications
- W7220 economizer controller with keypad and display
- Supply Air Temperature sensor (20K ohm)
- Outdoor changeover condition sensor (either 20K ohm dry-bulb or enthalpy sensor)

Unit Installation

All damper hardware and standard economizer control components except the enthalpy sensor are factory-mounted in their operating location. Complete the unit installation by relocating the enthalpy sensor (when provided; see below), then assembling and mounting the unit's outside air hood. Refer to the base unit's installation instruction manual for directions on locating the hood parts package and assembling the hood with filters.

Enthalpy Sensor Relocation –

See Fig. 10 for view of the enthalpy sensor. Locate the enthalpy sensor on the side of the economizer housing; remove mounting screws and save screws. Confirm the DIP switches are set at OFF, OFF, OFF (see Table 9). Move the enthalpy sensor to the front face of the economizer housing and mount per label.

W7220 Economizer Controller

The economizer controller used on electro mechanical units is the Honeywell W7220.

The W7220 provides typical economizer functions, including:

- Management of outside air damper for base unit Occupied (damper open and modulating) and unit OFF or Unoccupied status (damper closed)
- Free-cooling using all outside air when outdoor conditions permit Integrated cooling operation using outside air and mechanical cooling when required
- Demand Control Ventilation (DCV) for modulating ventilation airflow according to space CO_2 level (requires factory-option or field-installed CO_2 sensor)

The W7220 control also includes a new capability that will adjust the damper control points during DCV or minimum ventilation operation as the indoor fan speed is changed. This control function ensures that required space ventilation airflow quantities are maintained during reduced fan speed operation.

Additional control capabilities include automatic detection of new sensors and detection of sensor failure or loss of communication.

The W7220 control module includes an integral user interface with keypad and LCD display that permits direct input of setpoint values and configurations and display of status and alarms.

The W7220 controller is located in the RTU base unit's Control Box. See the Installation Instructions for this base unit for the location of the Control Box access panel.

User Interface

The user interface consists of a 2-line LCD display and a 4-button keypad on the front of the economizer controller.

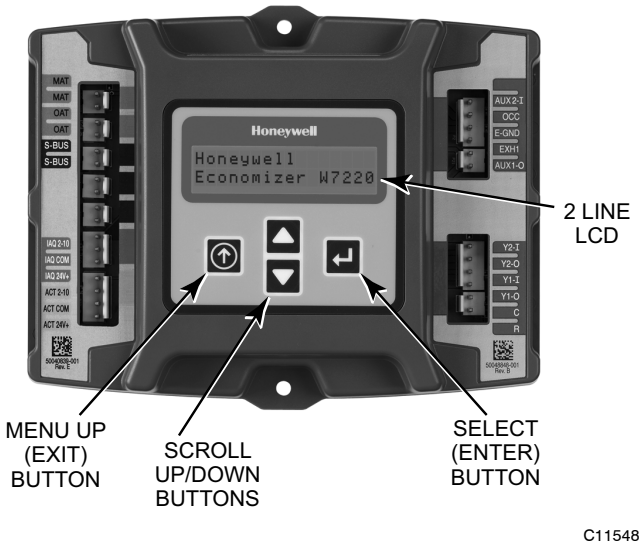

Fig. 2 - W7220 Controller

Keypad

The four navigation buttons (see Fig. 2) are used to scroll through the menus and menu items, select menu items, and to change parameter and configuration settings.

Using the Keypad with Menus

To use the keypad when working with menus:

- Press the ▲ (Up arrow) button to move to the previous menu.
- Press the ▼ (Down arrow) button to move to the next menu.
- Press the ↵ (Enter) button to display the first item in the currently displayed menu.
- Press the ⓪ (Menu Up/Exit) button to exit a menu's item and return to the list of menus.

The Menus in display order are:

- STATUS
- SETPOINTS
- SYSTEM SETUP
- ADVANCED SETUP
- CHECKOUT
- ALARMS

Using the Keypad with Settings and Parameters

To use the keypad when working with Setpoints, System and Advanced Settings, Checkout tests and Alarms:

1. Navigate to the desired menu.
2. Press the ↵ (Enter) button to display the first item in the currently displayed menu.
3. Use the ▲ and ▼ buttons to scroll to the desired parameter.
4. Press the ↵ (Enter) button to display the value of the currently displayed item.
5. Press the ▲ button to increase (change) the displayed parameter value.
6. Press the ▼ button to decrease (change) the displayed parameter value.

   NOTE: When values are displayed, pressing and holding the ▲ or ▼ button causes the display to automatically increment.
7. Press the ↵ (Enter) button to accept the displayed value and store it in nonvolatile RAM.
8. "CHANGE STORED" displays.
9. Press the ↵ (Enter) button to return to the current menu parameter.
10. Press the ⓪ (Menu Up/Exit) button to return to the previous menu.

Menu Structure

IMPORTANT: Table 2 illustrates the complete hierarchy. Your menu parameters may be different depending on your configuration. For example if you do not have a DCV (CO_2) sensor, then none of the DCV parameters appear.

The menu hierarchy has been modified to reflect controller configuration for 2-speed indoor fan application.

NOTE: Some parameters in the menus use the letters MA or MAT, indicating a mixed air temperature sensor location before the cooling coil. This unit application has the control sensor located after the cooling coil, in the fan section, where it is designated as (Cooling) Supply Air Temperature or SAT sensor.

Table 2 – Menu Structure[a]

Menu	Parameter	Parameter Default Value	Parameter Range and Increment[b]	EXPANDED PARAMETER NAME Notes
STATUS	ECON AVAIL	NO	YES/NO	ECONOMIZING AVAIALBLE YES = economizing available; the system can use outside air for free cooling when required
	ECONOMIZING	NO	YES/NO	ECONOMIZING ACTIVE YES = Outside air being used for 1st stage cooling. NO = Economizing not active
	OCCUPIED	NO	YES/NO	OCCUPIED YES = OCC signal received from space thermostat or unitary controller. YES = 24 Vac on terminal OCC. NO = 0 Vac on terminal OCC.
	HEAT PUMP	n/a[c]	COOL HEAT	HEAT PUMP MODE (Not available on 2–Speed configuration)
	COOL Y1–IN	OFF	ON/OFF	FIRST STAGE COOLING DEMAND (Y1–IN) Y1–I signal from space thermostat or unitary controller for Cooling Stage 1. ON = 24 Vac on terminal Y1–I OFF = 0Vac on terminal Y1–I
	COOL Y1–OUT	OFF	ON/OFF	FIRST STAGE COOLING RELAY OUTPUT ON = 24 Vac on terminal Y1–O; Stage 1 mechanical cooling called on OFF = 0 Vac on terminal Y1–O; no mechanical cooling
	COOL Y2–IN	OFF	ON/OFF	SECOND STAVE COOLING DEMAND (Y2–IN) Y2–I signal from space thermostat or unitary controller for Cooling Stage 2. ON = 24 Vac on terminal Y2–I OFF = 0 Vac on terminal Y2–I
	COOL Y2–OUT	OFF	ON/OFF	SECOND STAGE COOLING RELAY OUTPUT ON = 24 Vac on terminal Y2–O; Stage 2 mechanical cooling called on OFF = 0 Vac on terminal Y2–O; no Stage 2 mechanical cooling
	MA TEMP	nn°F (or °C)	0 to 140°F (–18 to 60°C)	SUPPLY AIR TEMPERATRUE, Cooling Mode Displays value of measured mixed/cooled air from SAT sensor in fan section. Displays ––.– if not connected, short or out–of–range. See Menu Note 2
	DA TEMP	nn°F (or °C)	0 to 140°F (–18 to 60°C)	DISCHARGE AIR TEMPERATRUE, after Heating section (Accessory sensor required) Displays when Discharge Air sensor is connected and displays measured discharge temperature. Displays –– –– –– if sensor sends invalid value, if not connected, short or out–of–range.
	OA TEMP	nn°F (or °C)	–40 to 140°F (–40 to 60°C)	OUTSIDE AIR TEMPERATRUE Displays measured value of outdoor air temperature. Displays –– –– –– if sensor sends invalid value, if not connected, short or out–of–range.
	OA HUM	nn%	0 to 100%	OUTSIDE AIR RELATIVE HUMIDITY Displays measured value of outdoor humidity from OA enthalpy sensor.
	RA TEMP	nn°F (or °C)	0 to 140°F (–18 to 60°C)	RETURN AIR TEMPERATRUE (Accessory sensor required) Displays measured value of return air temperature from RAT sensor.
	RA HUM	nn%	0 to 100%	RETURN AIR RELATIVE HUMIDITY (Accessory enthalpy sensor required) Displays measured value of return air humidity from RA sensor.
	IN CO2	___ppm	0 to 2000 ppm	SPACE/RETURN AIR CO2 (CO_2 sensor required, accessory or factory option) Displays value of measured CO_2 from CO_2 sensor. Invalid if not connected, short or out–of–range
	DCV STATUS	n/a	ON/OFF	DEMAND CONTROL VENTILATION STATUS (CO_2 sensor required, accessory or factory option) Displays ON if IN CO2 value above setpoint DCV SET and OFF if below setpoint DCV SET.
	DAMPER OUT	2.0V	2.0 to 10.0V	Displays voltage output to the damper actuator. 0% = OSA Damper fully closed 100% = OSA Damper full open See Menu Note 3.
	ACT POS	nn%	0 to 100%	Displays actual position of outdoor air damper actuator 2.0V = OSA Damper fully–closed 10.0V = OSA Damper full open
	ACT COUNT	n/a	1 to 65535	Displays number of times actuator has cycled. 1 Cycle equals accrued 180° of actuator movement in any direction
	ACTUATOR	n/a	OK/Alarm (on Alarm menu)	Displays Error if voltage or torque is below actuator range
	EXH1 OUT	OFF	ON/OFF	EXHAUST STAGE 1 RELAY OUTPUT Output of EXH1 terminal: ON = relay closed OFF = relay open

Table 2 - Menu Structure[a] (cont)

Menu	Parameter	Parameter Default Value	Parameter Range and Increment[b]	EXPANDED PARAMETER NAME Notes
STATUS (cont)	EXH2 OUT	OFF	ON/OFF	EXHAUST STAGE 2 RELAY OUTPUT Output of AUX terminal; displays only if AUX = EXH2 ON = relay closed OFF = relay open
	ERV	OFF	ON/OFF	ENERGY RECOVERY UNIT RELAY OUTPUT Output of AUX terminal; displays only if AUX = ERV ON = relay closed OFF = relay open
	MECH COOL ON	0	0, 1, or 2	Displays stage of mechanical cooling that is active.
	FAN SPEED	n/a	LOW or HIGH	SUPPLY FAN SPEED Displays speed setting of fan on a 2−speed fan unit.
	W (HEAT ON)	n/a	ON/OFF	HEAT DEMAND STATUS Displays status of heat demand on a 2−speed fan unit.
SETPOINTS	MAT SET	53°F (12°C)	38 to 65°F; (3 to 18°C) increment by 1	SUPPLY AIR SETPOINT Setpoint determines where the economizer will modulate the OA damper to maintain the mixed air temperature. See Menu Note 2.
	LOW T LOCK	32°F (0°C)	−45 to 80°F; (−43 to 27°C) increment by 1	COMPRESSOR LOW TEMPERATURE LOCKOUT Setpoint determines outdoor temperature when the mechanical cooling cannot be turned on.
	DRYBLB SET	63°F (17°C)	48 to 80°F (9 to 27°C) increment by 1	OA DRY BULB TEMPERATURE CHANGEOVER SETPOINT Setpoint determines where the economizer will assume outdoor air temperature is good for free cooling; e.g.: at 63°F (17°C), unit will economize at 62°F (16.7°C) and below and not economize at 64°F (17.8°C) and above. There is a 2°F (1.1°C)deadband. See Menu Note 3
	ENTH CURVE	ES3	ES1, ES2, ES3, ES4, or ES5	ENTHALPY CHANGEOVER CURVE (Requires enthalpy sensor option) Enthalpy boundary “curves” for economizing using single enthalpy.
	DCV SET	1100ppm	500 to 2000 ppm; increment by 100	DEMAND CONTROL VENTILATION SETPOINT Displays only if CO_2 sensor is connected. Setpoint for Demand Control Ventilation of space. Above the setpoint, the OA dampers will modulate open to bring in additional OA to maintain a space ppm level below the setpoint.
	MIN POS L	6.0 V	2 to 10 Vdc	VENTILATION MINIMUM POSITION AT LOW SPEED Displays ONLY if a CO_2 sensor is NOT connected.
	MIN POS H	4.4 V	2 to 10 Vdc	VENTILATION MINIMUM POSITION AT HIGH SPEED Displays ONLY if a CO_2 sensor is NOT connected.
	VENTMAX L	6.0 V	2 to 10 Vdc	DCV MAXIMUM DAMPER POSITION AT LOW SPEED (Requires CO_2 sensor connected)
	VENTMAX H	4.4 V	2 to 10 Vdc	DCV MAXIMUM DAMPER POSITION AT HIGH SPEED (Requires CO_2 sensor connected)
	VENTMIN L	3.7 V	2 to 10 Vdc	DCV MINIMUM DAMPER POSITION AT LOW SPEED (Requires CO_2 sensor connected)
	VENTMIN H	2.8 V	2 to 10 Vdc	DCV MINIMUM DAMPER POSITION AT HIGH SPEED (Requires CO_2 sensor connected)
	ERV OAT SP	32°F (0°C)	0 to 50°F; (−18 TO 10°C) increment by 1	ENERGY RECOVERY VENTILATION UNIT OUTDOOR AIR TEMPERATURE SETPOINT Only when AUX1 O = ERV
	EXH1 L SET	65%	0 to 100%; Increment by 1	EXHAUST FAN STAGE 1 SETPOINT AT LOW SPEED Setpoint for OA damper position when exhaust fan1 is powered by the economizer
	EXH1 H SET	50%	0 to 100%; Increment by 1	EXHAUST FAN STAGE 1 SETPOINT AT HIGH SPEED Setpoint for OA damper position when exhaust fan1 is powered by the economizer
	EXH2 L SET	80%	0 to 100%; Increment by 1	EXHAUST FAN STAGE 2 SETPOINT AT LOW SPEED Setpoint for OA damper position when exhaust fan1 is powered by the economizer. Only used when AUX1−O is set to EHX2.
	EXH2 H SET	75%	0 to 100%; Increment by 1	EXHAUST FAN STAGE 2 SETPOINT AT HIGH SPEED Setpoint for OA damper position when exhaust fan1 is powered by the economizer. Only used when AUX1−O is set to EHX2.

Table 2 - Menu Structure[a] (cont)

Menu	Parameter	Parameter Default Value	Parameter Range and Increment[b]	EXPANDED PARAMETER NAME Notes
SYSTEM SETUP	INSTALL	01/01/10		Display order = MM/DD/YY Setting order = DD, MM, then YY.
	UNITS DEG	°F	°F or °C	Sets economizer controller in degrees Fahrenheit or Celsius.
	EQUIPMENT	CONV	Conventional or HP	CONV = conventional; HP O/B = Enable Heat Pump mode. Not available with 2−speed See Menu Note 4
	AUX2 I	W	W required for 2−speed mode	W = Informs controller that system is in heating mode. SD = Enables configuration of shutdown (not available on 2−Speed) See Menu Note 4
	FAN TYPE	2speed	2speed required	Sets the economizer controller for operation of 1 speed or 2 speed indoor fan system. See Menu Note 4.
	FAN CFM	5000cfm	100 to 15000 cfm; increment by 100	UNIT DESIGN AIRFLOW (CFM) Enter ONLY of using DCVCAL ENA = AUTO The value is found in the Project Submittal documents for the specific RTU.
	AUX OUT	NONE	NONE ERV EXH2 SYS	Select OUTPUT for AUX1 O relay NONE = not configured (output is not used) ERV = Energy Recovery Ventilator[d] EXH2 = second damper position relay closure for second exhaust fan SYS = use output as an alarm signal
	OCC	INPUT	INPUT or ALWAYS	OCCUPIED MODE BY EXTERNAL SIGNAL When using a setback thermostat with occupancy out (24 Vac), the 24 Vac is input to the OCC terminal. RTU control circuit provides 24−Vac to OCC through OCCUPIED terminals on Central Terminal Board. See Menu Note 2.
	FACTORY DEFAULT	NO	NO or YES	Resets all set points to factory defaults when set to YES. LCD will briefly flash YES and change to NO but all parameters will change to the factory default values. **RECHECK AUX2 I and FANTYPE for required 2−speed values.**
ADVANCED SETUP	MA LO SET	45°F (7°C)	35 to 55°F; (2 to 12°C) Incremented by 1°	SUPPLY AIR TEMPERATURE LOW LIMIT Temperature to achieve Freeze Protection (close damper and alarm if temperature falls below setup value)
	FREEZE POS	CLO	CLO or MIN	FREEZE PROTECTION DAMPER POSITION Damper position when freeze protection is active CLO = closed MIN = MIN POS or VENTMAX
	CO2 ZERO	0ppm	0 to 500 ppm: Increment by 10	CO_2 ppm level to match CO_2 Sensor start level.
	CO2 SPAN	2000ppm	1000 to 3000 ppm; Increment by 50	CO_2 ppm span to match CO_2 sensor.
	STG3 DLY	2.0h	0 min, 5 min, 15 min, then 15 min intervals. Up to 4 h or OFF	COOLING STAGE 3 DELAY Delay after stage 2 for cool has been active. Turns on 2nd stage of cooling when economizer is 1st stage and mechanical cooling is 2nd
	SD DMPR POS	CLO	CLO or OPN	Function NOT AVAILABLE with 2−speed mode
	DCVCAL ENA	MAN	MAN (manual)	Turns on the DCV automatic control of the dampers. Resets ventilation.
	MATTCAL	0.0°F (or C)	+/−2.5°F (+/−1.4°C)	SUPPLY AIR TEMPERATURE CALIBRATION Allows for the operator to adjust for an out of calibration supply air temperature (SAT) sensor
	OA T CAL	1.0°F (or C)	+/−2.5°F (+/−1.4°C)	OUTSIDE AIR TEMPERATURE CALIBRATION Allows for the operator to adjust for an out of calibration outside air temperature (OAT) sensor
	OA H CAL	0% RH	+/−10% RH	OURTSIDE AIR HUMIDITY CALIBRATION Allows for the operator to adjust for an out of outside air enthalpy sensor
	RA T CAL	2.0°F (or C)	+/−2.5°F (+/−1.4°C)	RETURN AIR TEMPERATURE CALIBRATION Allows for the operator to adjust for an out of calibration return air temperature (RA) sensor
	RA H CAL	0% RH	+/−10% RH	RETURN AIR HUMIDITY CALIBRATION Allows for the operator to adjust for an out of calibration return air enthalpy sensor
	DA T CAL	0.0°F (or C)	+/−2.5°F (+/−1.4°C)	DISCHARGE AIR TEMPERATURE CALIBRATION Allows for the operator to adjust for an out of calibration discharge air temperature (DAT) sensor
	2SP FAN DELAY	5 Minutes	0 to 20 minutes in 1 minute increments	TIME DELAY ON 2nd STAGE ECONOMIZING While in the Economizing mode, this is the delay between thermostat Y2 call and Y1−O output to mechanical cooling stage, to allow high speed fan operation to attempt to cool space first.

Table 2 - Menu Structure[a] (cont)

Menu	Parameter	Parameter Default Value	Parameter Range and Increment[b]	EXPANDED PARAMETER NAME Notes
CHECKOUT	DAMPER VMIN .HS	n/a	n/a	Positions OA damper to VMIN High Speed position
	DAMPER VMAX .HS	n/a	n/a	Positions OA damper to VMAX High Speed position
	DAMPER OPEN	n/a	n/a	Positions OA damper to the full open position.
	DAMPER CLOSE	n/a	n/a	Positions damper to the fully closed position
	CONNECT Y1 – O	n/a	n/a	Closes the Y1 – O relay (Y1 – O)
	CONNECT Y2 – O	n/a	n/a	Closes the Y2 – O relay (Y2 – O)
	CONNECT AUX1O	n/a	n/a	Energizes the AUX1O output. If Aux setting is: • NONE – not action taken • ERV – 24 Vac out. Turns on or signals an ERV that the conditions are not good for economizing but are good for ERV operation.[d] • SYS – 24 Vac out. Issues a system alarm
ALARMS(_)				Alarms display only when they are active. The menu title "ALARMS(_)" includes the number of active alarms in parenthesis ( ).
	MA T SENS ERR	n/a	n/a	SUPPLY AIR TEMPERATURE SENSOR ERROR
	CO2 SENS ERR	n/a	n/a	CO2 SENSOR ERROR
	OA T SENS ERR	n/a	n/a	OUTSIDE AIR TEMPERATURE SENSOR ERROR OAT sensor connected at input terminals OAT
	OA SYLK SENS ERR	n/a	n/a	OUTSIDE AIR TEMPERATURE SENSOR ERROR OAT sensor connected on S– bus
	DA T SENS ERR	n/a	n/a	DISCHARGE AIR TEMPERATURE SENSOR ERROR
	SYS ALARM	n/a	n/a	When AUX is set to SYS and there is any alarm (e.g., failed sensors, etc.), the AUX terminal has 24 Vac out.
	ACT UNDER V	n/a	n/a	ACTUATOR VOLTAGE LOW Voltage received at actuator is below expected range
	ACT OVER V	n/a	n/a	ACTUATOR VOLTAGE HIGH Voltage received at actuator is above expected range
	ACT STALLED	n/a	n/a	ACTUATOR STALLED Actuator stopped before reaching commanded position

a Table 2 illustrates the complete hierarchy. your menu parameters may be different depending on your configuration. For example if you do not have a DCV (CO_2) sensor, then none of the DCV parameters appear.

b When values are displayed, pressing and holding the ▲ or ▼ button causes the display to automatically increment.

c n/a = not applicable

d ERV Operation: When in Cooling mode AND the conditions are NOT OK for economizing – the ERV terminal will be energized. In the Heating mode the ERV terminal will be energized when the OA is below the ERV OAT setpoint in the setpoint menu.

Menu Notes

1 ***STATUS – > OCCUPIED –*** The factory-standard Occupancy signal originates with a thermostat or other controller call for indoor fan operation at CTB terminal G. This signal passes through the Central Terminal Board's OCCUPIED jumper JMP1 to the ECONO connector and to the W7220's OCC input terminal. An external timeclock or relay is required to implement an Occupancy schedule on the economizer damper position.

2 ***STATUS -> MA TEMP, SETPOINTS -> MAT SET –*** The W7220 menu parameters and labels include designations MA , MAT and Mixed Air for the economizer cooling control sensor. On these rooftop units, the economizer control sensor is located downstream of the evaporator/indoor coil in the supply fan section where this sensor is designated as Supply Air Temperature (SAT) sensor.

3 ***SETPOINTS -> DRYBLB SET –*** This point is not displayed if a Return Air (differential) temperature sensor or an Outdoor Air enthalpy sensor is connected.

4 ***SYSTEM SETUP*** parameters must be configured as noted for 2-Speed unit operation:
EQUIPMENT = CONV
AUX2 I = W
FAN TYPE = 2SPEED

CONNECTIONS AND APPLICATIONS

W7220 Economizer Module Wiring

Use Fig. 3 and Tables 3 and 4 to locate the wiring terminals for the Economizer module.

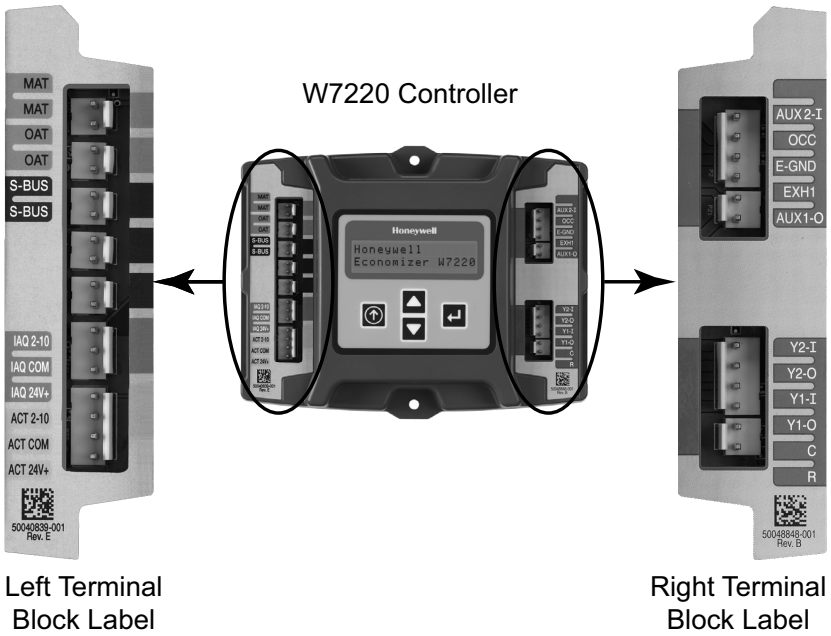

C12014

Fig. 3 - W7220 Economizer Module Terminal Connection Labels

Table 3 – Economizer Module - Left Hand Terminal Blocks

Label	Type	Description
Top Left Terminal Block		
MAT MAT	20k NTC and COM	Supply Air Temperature Sensor (polarity insensitive connection)
OAT OAT	20k NTC and COM	Outdoor Air Temperature Sensor (polarity insensitive connection)
S–BUS S–BUS	S–Bus (Sylk Bus)	Enthalpy Control Sensor (polarity insensitive connection)
Bottom Left Terminal Block		
IAQ 2–10	2–10 Vdc	Air Quality Sensor Input (e.g. CO_2 sensor)
IAQ COM	COM	Air Quality Sensor Common
IAQ 24V	24 Vac	Air Quality Sensor 24 Vac Source
ACT 2–10	2–10 Vdc	Damper Actuator Output (2–10 Vdc)
ACT COM	COM	Damper Actuator Output Common
ACT 24V	24 Vac	Damper Actuator 24 Vac Source

Table 4 – Economizer Module - Right Hand Terminal Blocks

Label	Type	Description
Top Right Terminal Block		
	n/a	The first terminal is not used
AUX2 I	24 Vac IN	Input from Thermostat W1 indicating base unit is in Heat mode, damper controls to High Fan Speed setpoints
OCC	24 Vac IN	Occupied / Unoccupied Input
E–GND	E–GND	Earth Ground – System Required
EXH1	24 Vac OUT	Exhaust Fan 1 Output
AUX1 O	24 Vac OUT	Programmable: Exhaust fan 2 output or Erv or System Alarm output
Bottom Right Terminal Block		
Y2–I	24 Vac IN	Y2 in – Cooling Stage 2 Input from space thermostat
Y2–O	24 Vac OUT	Y2 out – Cooling Stage 2 Output to stage 2 mechanical cooling
Y1–I	24 Vac IN	Y1 in – Cooling Stage 2 Input from space thermostat
Y1–O	24 Vac OUT	Y1 out – Cooling Stage 2 Output to stage 2 mechanical cooling
C	COM	24 Vac Common
R	24 Vac	24 Vac Power (Hot)

Refer to Figs 4 and 5 for sensor and controls connections.

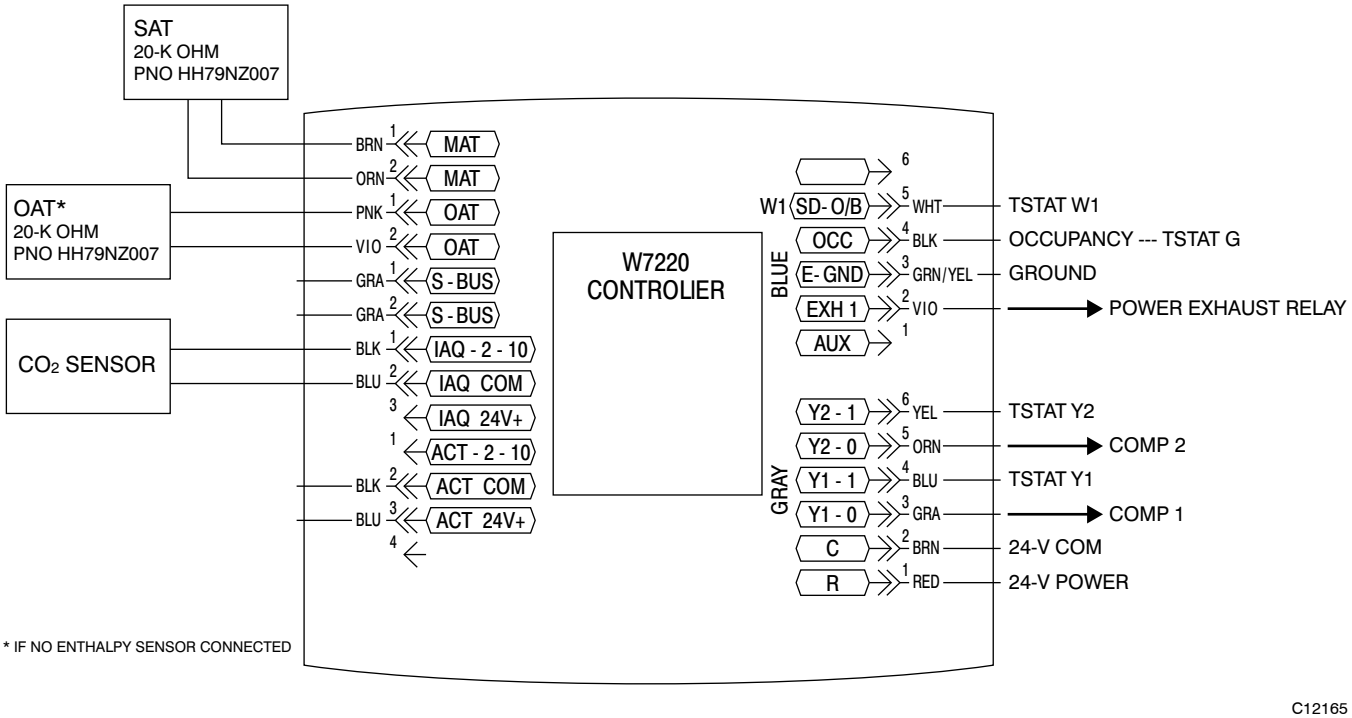

Fig. 4 - W7220 Sensor and Control I/O Connections

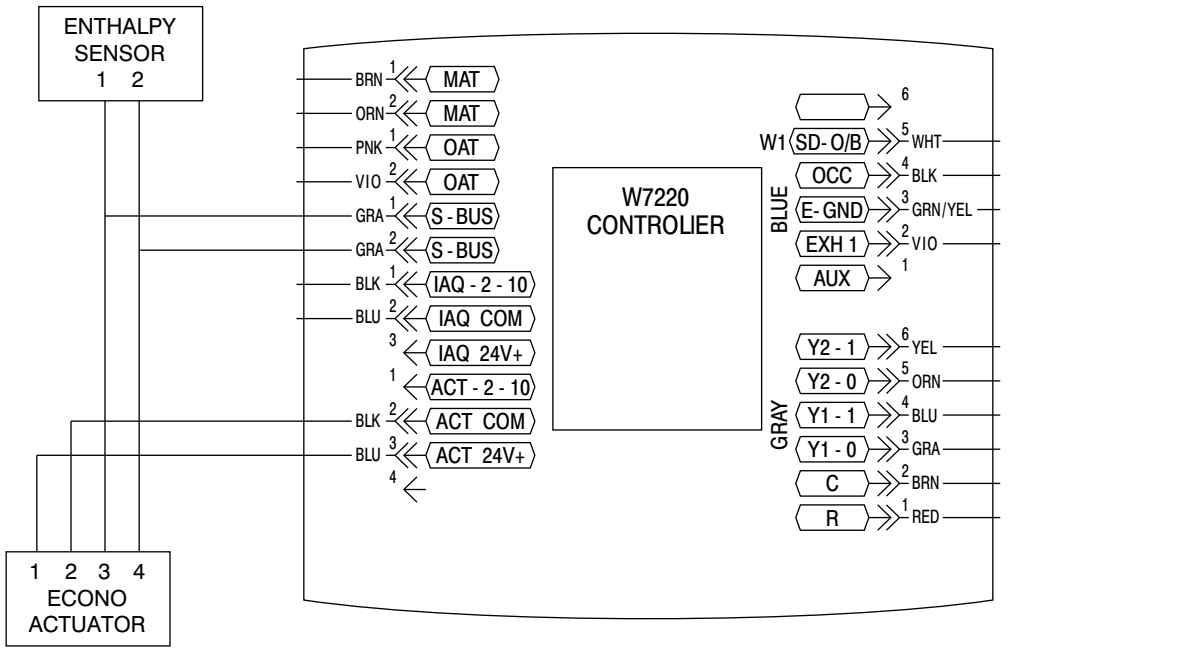

Fig. 5 - Actuator/S-BUS

ECONOMIZER CONTROL CONFIGURATIONS

Enthalpy Changeover Control

Economizer changeover based on outdoor air enthalpy requires an outdoor air enthalpy sensor to replace the OAT sensor. The enthalpy sensor is available as a factory-installed option or as a field-installed accessory (part number HH57AC081). See Fig. 1 for model number nomenclature; check Position #15 for codes W or X indicating a factory-installed enthalpy sensor. Use Fig. 6 and Table 5 to select the enthalpy changeover setting to enter in menu item SETPOINTS -> ENTH CURVE.

Enthalpy Settings

When the OA temperature, enthalpy and dew point are below the respective setpoints, the Outdoor Air can be used for economizing. Fig. 6 shows the new single

enthalpy boundaries in the W7220. There are 5 boundaries (setpoints ES1 through ES5), which are defined by dry bulb temperature, enthalpy and dew point.

Refer to Table 5 for ENTH CURVE setpoint values.

The W7220 calculates the enthalpy and dew point using the OA temperature and humidity input from the OA enthalpy sensor. When the OA temperature, OA humidity and OA dew point are all below the selected boundary, the economizer sets the economizing mode to YES, economizing is available.

When all of the OA conditions are above the selected boundary, the conditions are not good to economize and the mode is set to NO.

Fig. 6 shows the 5 current boundaries. There is also a high limit boundary for differential enthalpy. The high limit boundary is ES1 when there are no stages of mechanical cooling energized and HL (high limit) when a compressor stage is energized.

Table 5 provides the values for each boundary limit.

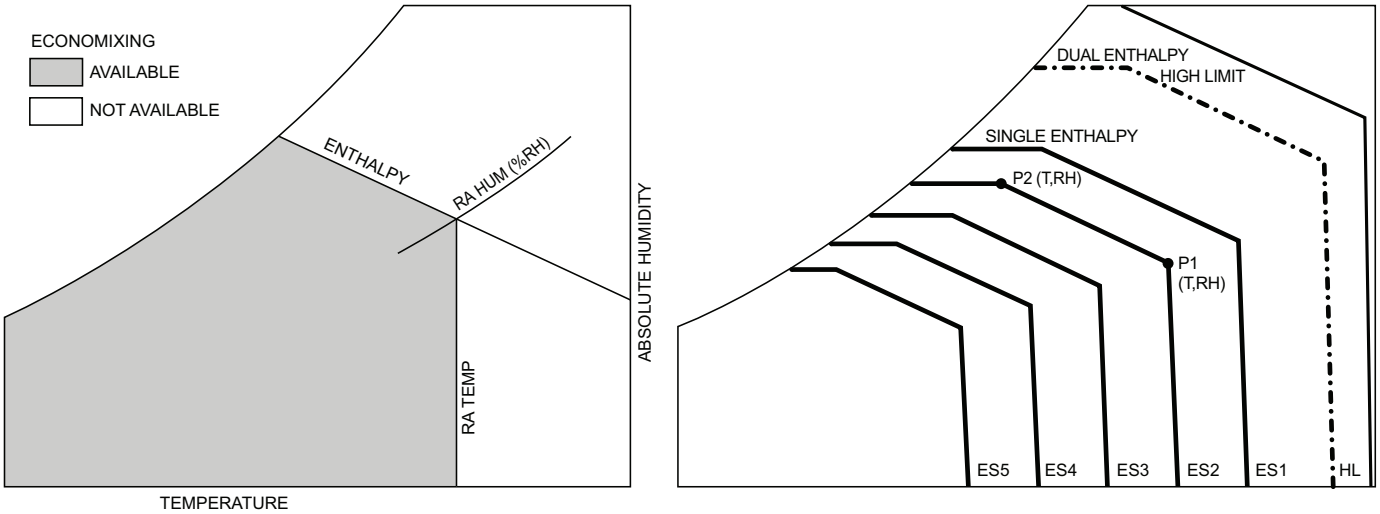

C12015

Fig. 6 - Single Enthalpy Curve and Boundaries

Table 5 – Single Enthalpy and Dual Enthalpy High Limit Curves (EN Units)

Enthalpy Curve	Temp. Dry–Bulb (°F)	Temp. Dewpoint (°F)	Enthalpy (btu/lb/da)	Point P1		Point P2	
				Temp. (°F)	Humidity %RH	Temp. (°F)	Humidity %RH
ES1	80.0	60.0	28.0	80.0	36.8	66.3	80.1
ES2	75.0	57.0	26.0	75.0	39.6	63.3	80.0
ES3	70.0	54.0	24.0	70.0	42.3	59.7	81.4
ES4	65.0	51.0	22.0	65.0	44.8	55.7	84.2
ES5	60.0	48.0	20.0	60.0	46.9	51.3	88.5
HL	86.0	66.0	32.4	86.0	38.9	72.4	80.3

Demand Control Ventilation

Demand Control Ventilation (DCV) function requires a space air CO_2 sensor be connected to the W7220 controller. The CO_2 sensor provides a 2 to 10 vdc signal proportional to the space CO_2 level. This sensor is available as a factory-installed option (located in the unit's return air plenum) or as a field-installed accessory. See Fig. 1 for model number nomenclature; check Position #9 for codes E, F, G or H indicating a factory-installed CO_2 sensor. The W7220 automatically recognizes the connection of this sensor and self-enables the DCV function after the Configuration period.

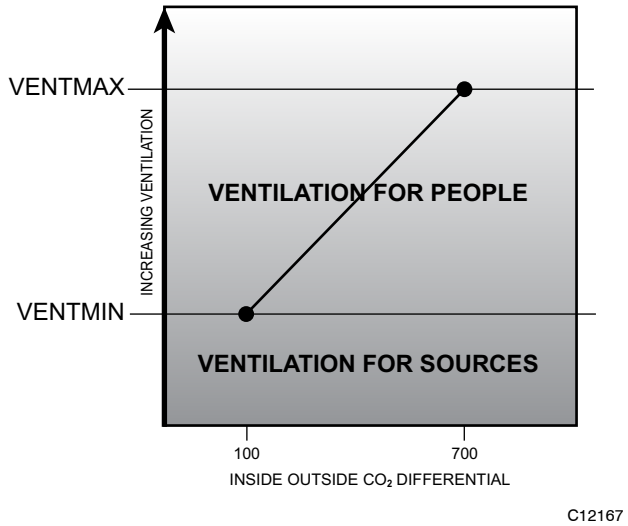

Fig. 7 - DCV Single-Speed System Setpoints

DCV With Single-Speed Fan System — During DCV, the outside air damper modulates between two user configurations depending upon the signal level of the space or return air CO_2 sensor representing the space occupancy level. The lower of these two positions is referred to as the Minimum IAQ Damper Position (designated VENTMIN) while the higher is referred to as Economizer Minimum Position (designated MINIMUM POSITION or VENTMAX). The VENTMIN position should be set to an economizer position that brings in enough fresh air to remove contaminants and CO_2 generated by sources other than people; this airflow rate is designated Va. The VENTMAX should be set to an economizer position that brings in enough fresh air to remove contaminants and CO_2 generated by all sources including people at the design condition for maximum space occupancy; this airflow rate is designated Vbz.

DCV With Two-Speed Fan System — Ventilation codes require that the same ventilation rates (Vbz and Va, expressed as CFM) be provided regardless of supply fan speed. When the supply fan speed is reduced, the internal static pressure in the unit's return plenum also decreases. If the same outside air damper position is retained, the airflow rate through the OA damper decreases below the Va and Vbz levels. To restore ventilation rates to design levels, the damper positions VENTMIN and VENTMAX must be automatically adjusted when the fan speed changes. The W7220 provides this function when it is configured for 2-speed fan operation through a second set of damper position setpoints.

During operation at High fan speed, the damper setpoint limits are designated VENTMIN H and VENTMAX H. Damper operation is same as described under Single-Speed Fan above.

During operation at Low fan speed, the damper setpoint limits change to VENTMIN L and VENTMIN L. These settings are higher than the comparable High speed settings and cause the outside air damper to open more to allow the same Va and Vbz airflow rates to be admitted to the space.

Adjust the DCV setpoints VENTMAX H and VENTMAX L with supply fan speed in High speed and Low speed respectively to provide the design load ventilation airflow rate Vbz by measuring outside air temperature, return air temperature and supply air temperature. Make damper position adjustments with at least 10°F temperature difference between the outdoor and return-air temperatures.

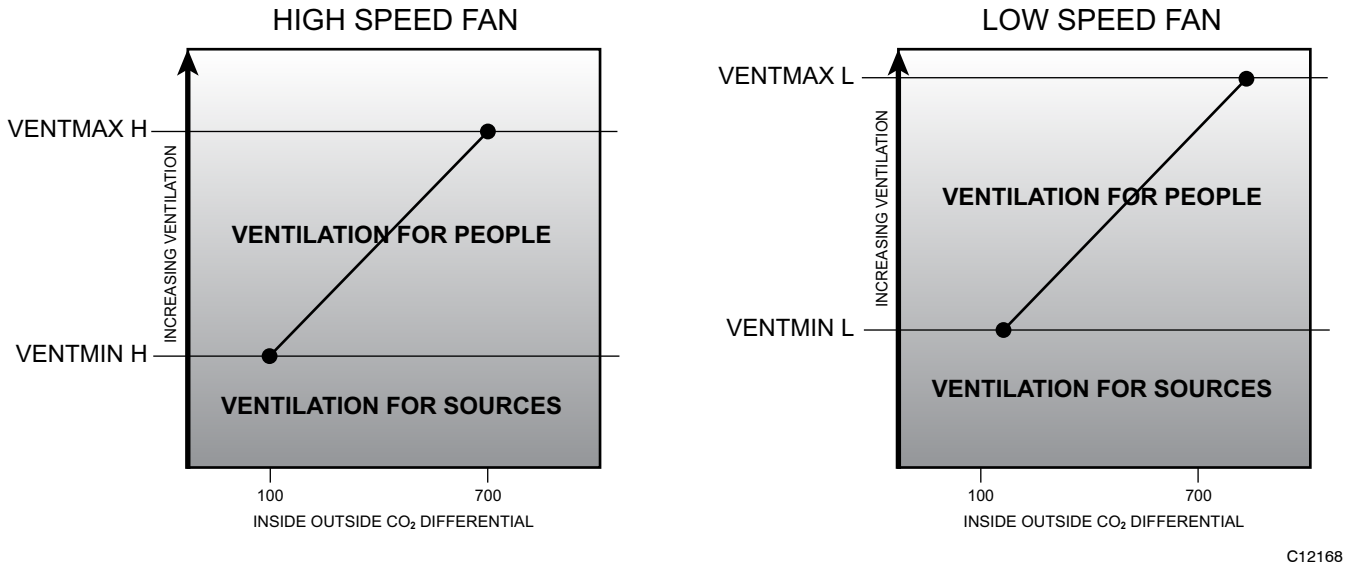

Fig. 8 - DCV 2-Speed System Setpoints — Same Ventilation CFM at Both Speeds

To determine the damper setpoint position, perform the following procedure for each condition setpoint, with mechanical cooling OFF:

Calculate the appropriate supply air temperature using the following formula:

TS = (TO x Vbz/CFM) + TR x (CFM – Vbz)/CFM

TS = Supply Air Temperature
TO = Outdoor Air Temperature
Vbz = Design Maximum Ventilation CFMr
CFM= Unit Supply Airflow Rate
TR = Return Air Temperature

As an example:

Unit Airflow Rate at High Speed is 4000 CFM
Ventilation CFM at design occupancy Vbz is 1200 CFM
TO = 60 F
TR = 75 F

Required TS = 60 x (1200/4000) + 75 x (4000 – 1200/4000)
= 60 x 0.30 + 75 x 0.70 = 18.0 + 52.5
= 70.5

At the W7220 keypad, enter the parameter SETUP -> VENTMAX H and adjust the setpoint value until the observed Supply Air Temperature (MA TEMP) reaches 70.5. Press the ↵ "Enter" key to save this setpoint to controller memory.

When determining VENTMIN setpoints, substitute the value for Va in place of Vbz in the formula.

DCV Setpoint — The SETPOINTS parameter DCV SET defines the space CO_2 level above which the DCV mode begins to open the outside air damper beyond its VENTMIN ventilation lower limit. This setpoint should be a minimum of 100 ppm greater than the outdoor ambient CO_2 level to ensure the outside air will be capable of diluting the space CO2 level. A typical value for outdoor CO_2 is 400 ppm; adjust the setpoint DCV SET to 500 ppm if outdoor CO_2 level is not known. The factory default value for DCV SET is 1100 ppm.

Economizer Occupancy Control

The 24-v signal that terminates at the W7220's OCC input to place the economizer control in Occupied mode when the supply fan starts is routed through the rooftop unit's Central Terminal Board at its OCCUPANCY jumper. To implement an occupancy control for the economizer operation, connect a contact set at CTB OCCUPANCY quick-connect terminals and cut jumper JMP2. To allow automatic occupancy mode, close the control contacts. To place the economizer in Unoccupied mode, open the control contacts.

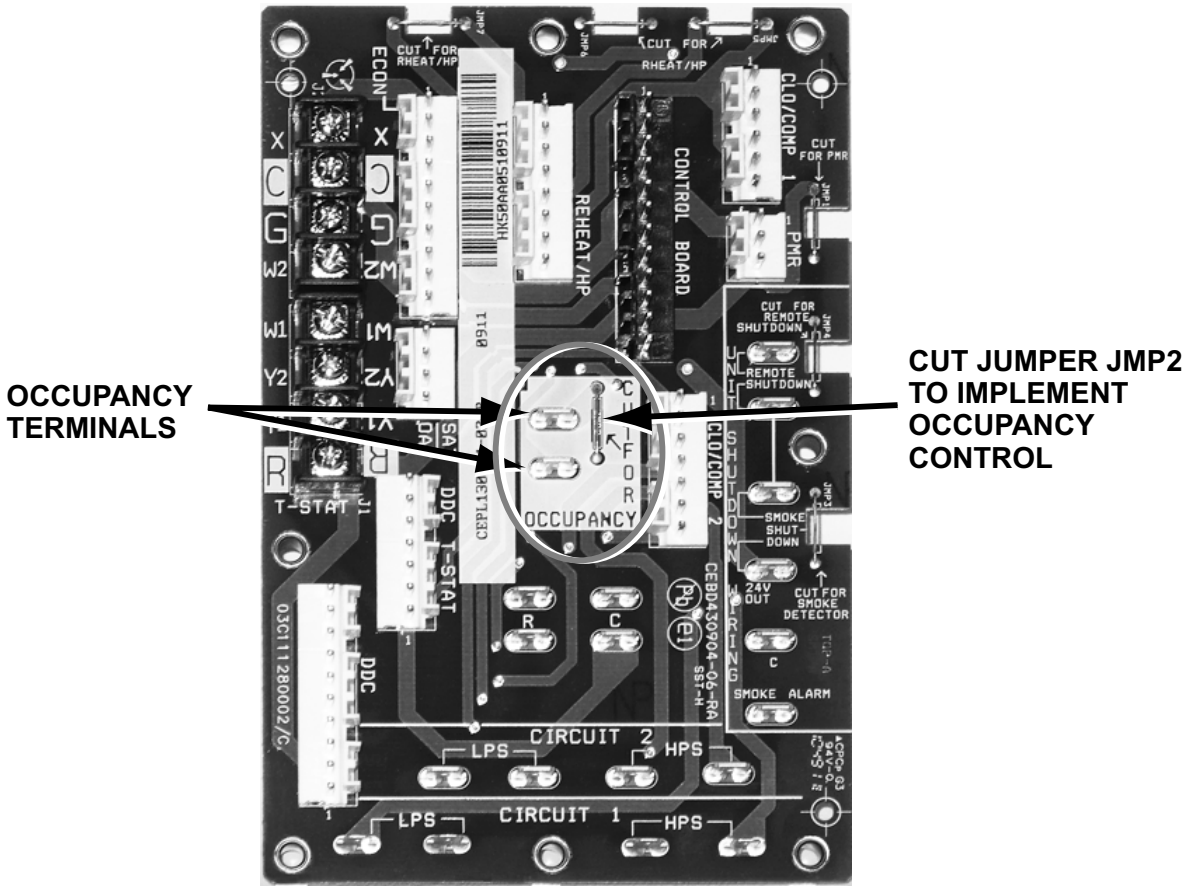

Fig. 9 - Central Terminal Board (CTB)

HARDWARE

Actuators

The Economizer X damper actuators are direct-coupled types with spring-return. Power is 24-v from the W7220 outputs. Range of rotation is 95-degrees; timing for full-range movement is 90 seconds to drive open in normal operation, 30 seconds in Test Mode and 25 seconds for spring return.

These actuators are S-bus enabled. The S-bus is a proprietary local equipment network that connects the W7220 controller, one S-enabled actuator and up to three S-type enthalpy sensors on a two-wire communication network. The S-bus is polarity-insensitive. Devices attached to the S- bus are automatically recognized by the controller.

Actuator command position is defined in a 2-10 vdc value. 2.0-v is outside air damper position fully-closed (0% open); 10.0-v is damper position fully-open (100% open). See Table 6 to correlate control voltage values to outside air damper opening percentage.

Table 6 – Actuator Voltage vs. Damper Position

Vdc	% Open	Vdc	% Open	Vdc	% Open
2.0	0	4.8	35	7.6	70
2.4	5	5.2	40	8.0	75
2.8	10	5.6	45	8.4	80
3.2	15	6.0	50	8.8	85
3.6	20	6.4	55	9.2	90
4.0	25	6.8	60	9.6	95
4.4	30	7.2	65	10.0	100

Two different actuators are used, based on unit size. Unit sizes 08 through 16 use a 3-Nm (27 lb-in) torque model, Honeywell Series MS3103K. Unit sizes 17 through 30 use a 5- Nm (44 lb-in) torque model, Series MS3105K.

MS3105 Mode Select Dial — The MS3105 actuator has a six-position Mode Select dial on its face. Positions 1 through 5 are component addresses. When used with W7220 controller, the dial must be set at position 1 – Address 11.

MS3105 TEST Mode — Position 6 on the Mode Select dial is a TEST Mode selector. In this TEST mode, the actuator will drive from closed to full-open and then return to closed position. Be sure to reset the Mode Selector dial to position 1, Address 11 after performing this TEST mode.

Supply Air Temperature Sensor

The W7220 controller uses a 20-k ohm analog sensor for Supply Air Temperature (SAT). The thermistor is attached to a ring terminal. The ring terminal is attached to the unit's supply fan housing, downstream of the unit's indoor coil. The SAT sensor is connected to the W7220 input terminals marked MAT. See Table 7 for sensor resistance to temperature correlations.

The W7220 controller requires a valid signal from its SAT channel in order to function. If the SAT connection to the W7220 is lost, the W7220 will initiate an alarm condition immediately. No economizing operation will be permitted until this alarm is cleared.

Table 7 – SAT/OAT Sensor Characteristics

Deg C	Ohms
–30	415156
–25	301540
–20	221210
–15	163834
–10	122453
–5	92382
0	70200
5	53806
10	41561
15	32341
20	25346
25	20000
30	15886
35	12698
40	10212
45	8261
50	6720

Deg F	Ohms
–20	386130
0	193070
20	101820
32	70200
40	55420
45	47771
50	41258
55	35725
60	31035
65	27069
70	23719
77	20000
80	18473
100	11544
120	6768

Outside Air Temperature Sensor

Economizer X systems equipped with outdoor dry bulb temperature changeover control include a 20-k ohm analog sensor to measure Outdoor Air Temperature (OAT). This is the same sensor used for the SAT function; see Table 7 for resistance vs temperature characteristics.

The OAT sensor is attached to the outside air damper frame. It is connected to the W7220's OAT input terminals.

If an accessory enthalpy sensor is added to an Economizer X system with factory dry bulb changeover, disconnect this OAT sensor wiring at the W7220's OAT input terminals.

Enthalpy Control Sensor Configuration

The W7220 economizer control system can accommodate up to three S-bus enthalpy sensors. On Economizer X models with factory-installed Enthalpy Changeover control, one S-bus sensor is provided in the economizer outdoor section. Additional sensors may be added to measure Return Air and Discharge Air conditions.

The Enthalpy Control sensor (Part Number: HH57AC081) communicates with the W7220 Economizer controller on the two-wire local equipment network bus (S-bus) and can either be wired using a two pin header or using a side connector. This sensor is used for all OAT (Outdoor Air Temperature), RAT (Return Air Temperature) and DAT

(Discharge Air Temperature), depending on how its three position DIP switch is set.

Use Fig. 10 and Table 8 to locate the wiring terminals for each Enthalpy Control sensor.

Use Fig. 10 and Table 9 to set the DIP switches for the desired use (location) of the sensor.

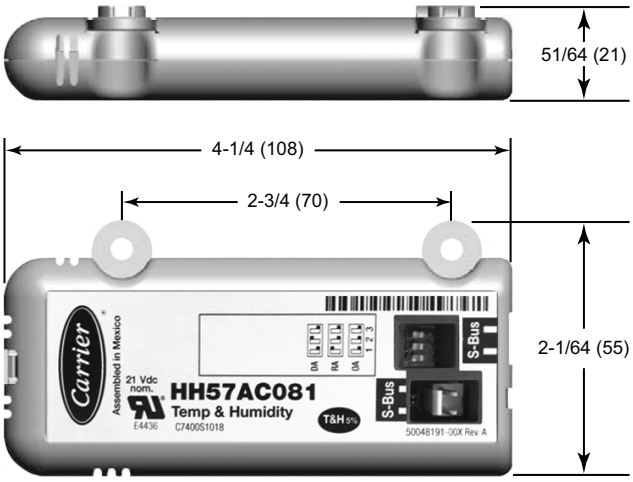

NOTE: Dimensions in ( ) are in mm

C12036

Fig. 10 - Enthalpy Control Sensor, Dimensions and DIP Switch Location

Table 8 – Enthalpy Control Sensor Wiring Terminations[a]

Terminal		Type	Description
Nbr	Label		
1	S–BUS	S–BUS	S–Bus Communications (Enthalpy Control Sensor Bus)
2	S–BUS	S–BUS	S–Bus Communications (Enthalpy Control Sensor Bus)

a Terminals are polarity insensitive.

Table 9 – Enthalpy Control Sensor DIP Switch Settings

Use	DIP Switch Positions for Switches 1, 2, & 3		
	1	2	3
DA[a]	OFF	ON	OFF
RA[b]	ON	OFF	OFF
OA[c]	OFF	OFF	OFF

a DA = Discharge Air
b RA = Return Air
c OA = Outside Air

When a S-bus sensor is connected to an existing network, it will take 60 minutes for the network to recognize and auto-configure itself to use the new sensor. During the 60 minute setup period, no alarms for sensor failures (except SAT) will be issued and no economizing function will be available.

OPERATING SEQUENCES

2-Speed Fan Motor

The Fan Speed Relay Board in the main unit determines the operating speed (Low or High) of the indoor fan based on space thermostat demand conditions. See Table 10 for this logic.

Table 10 – Supply Fan Speed Logic

TSTAT OUTPUT					
G/OCC	0–V	**24–V**	24–V	24–V	24–V
Y1	0–V	0–V	**24–V**	24–V	0–V
Y2	0–V	0–V	0–V	**24–V**	0–V
W1	0–V	0–V	0–V	0–V	**24–V**
SUPPLY FAN MOTOR SPEED	OFF	LOW	LOW	HIGH	HIGH

W7220 Economizer Control

Tables 11 and 12 provide the W7220 Input/Output Logic. Table 11 describes economizer functions for a unit without a CO_2 sensor. Table 12 describes economizer functions for a unit with Demand Control Ventilation (CO_2 sensor connected). The supply fan speed is included in these tables for reference; this is neither an input or output of the W7220 controller.

Base Unit Controls

Base unit includes standard electromechanical controls, 2-speed supply fan motor with VFD, EconoMi$er X (with W7220 controller) and thermostat or unitary controller that energizes the G terminal in cooling and heating to control the supply fan operation.

Cooling, Unit With EconoMi$er X Without CO_2

For Occupied mode operation of EconoMi$er X, there must be a 24-v signal at terminal G at the unit's Central Terminal Board from the thermostat; supply fan motor will start and run in Low Speed. The signal at G is connected to W7220 input OCC, placing the EconoMi$er X control in Occupied mode; the economizer actuator is commanded open to the MIN POS L ventilation position. Removing the signal at OCC places the EconoMi$er X control in Unoccupied mode; the economizer actuator is driven back to full-closed position.

When free cooling using outside air is not available, the unit cooling sequence will be controlled directly by the space thermostat. Thermostat call for Stage 1 Cooling energizes CTB terminals G and Y1; supply fan motor starts and runs in Low Speed. The Y1 demand is received at W7220 terminal Y1-I. Outside air damper position will be at MIN POS L. W7220 output Y1-O is energized; first stage mechanical cooling starts.

If the space temperature continues to rise, the thermostat will call for second stage cooling; CTB terminal Y2 is also energized. The supply fan motor shifts to High Speed. The Y2 demand is received at W7220 terminal Y2-I. Outside air damper position will shift to MIN POS H. W7220 output Y2-O is energized; second stage mechanical cooling starts.

As space temperature falls, the thermostat will remove its call for second stage cooling; CTB terminal Y2 call is removed. The supply fan motor shifts back to Low Speed. The W7220 input Y2-I is also removed; the outside air damper is repositioned to MIN POS L and output Y2-O is de-energized, stopping second stage mechanical cooling. As space temperature continues to fall and space cooling load is satisfied, the thermostat will remove its call for first stage cooling; CTB terminal Y1 call is removed. The W7220 input Y1-I is removed; output Y1-O is de-energized, stopping first stage cooling.

When CTB terminal Y1 is de-energized, terminal G may remain energized, indicating Continuous Fan operation. The supply fan motor will continue to run in Low Speed. W7220 input OCC remains energized; the outside air damper remains in MIN POS L. If CTB terminal G is also de-energized with Y1, indicating AUTO Fan operation, then the supply fan motor will stop. The W7220 input at OCC is removed; the outside air damper closes.

When free cooling is available as determined by the appropriate changeover command (outdoor dry bulb, outdoor enthalpy, differential dry bulb or differential enthalpy), a space thermostat call for Stage 1 Cooling energizes CTB terminals G and Y1; supply fan motor starts and runs in Low Speed. The G demand is received at W7220 input OCC; outside air damper moves to MIN POS L. The Y1 demand is received at W7220 terminal Y1-I. The W7220 economizer control will modulate the outside air damper open and closed to maintain the unit cooling supply air temperature at setpoint MAT SET (default 53°F (12°C)). Compressor will not run.

During free cooling operation, a supply air temperature (SAT) above MAT SET will cause the outside air damper to modulate between MIN POS L setpoint and 100% open. As SAT decreases and approaches setpoint MA LO SET (default 45°F (7°C)), the outside air damper will maintain at the MIN POS L setting. With SAT below MA LO SET, the outside air damper will be closed or at minimum (see FREEZE POS) When SAT rises to MA LO SET plus 3°F, the outside air damper will re-open to MIN POS L setting.

Should 100% outside air not be capable of satisfying the space cooling load, space temperature will rise and the thermostat will call for second stage cooling; CTB terminal Y2 is also energized. The supply fan motor shifts to High Speed. The Y2 demand is received at W7220 terminal Y2-I. Outside air damper position will shift to MIN POS H. Time delay parameter 2SP FAN DELAY (default 5 minutes) will commence, blocking W7220 output Y1-O and allowing the free cooling with High Speed fan operation to attempt to satisfy the space cooling load without additional mechanical cooling. After the delay period, W7220 output Y1-O is energized, starting first stage mechanical cooling. Damper will modulate to maintain SAT at MAT SET concurrent with Compressor 1 operation.

Table 11 – W7220 Input/Output without CO_2 Sensor

INPUTS				Ref:	OUTPUTS			
DEMAND CONTROL VENTILATION	OUTSIDE AIR Good to economize?	Y1 – I	Y2 – 1	FAN SPD (a)	Mechanical Cooling Stage		Occupancy	
							OCC Yes	OCC No
					Y1 – O/1ST	Y2 – O/2ND	Outside Air Damper Position	
NO CO_2 SENSOR	No	Off	Off	Low	0 – v/Off	0 – v/Off	MIN POS L	Closed
		On	Off	Low	24 – v/On	0 – v/Off	MIN POS L	Closed
		On	On	High	24 – v/On	24 – v/On	MIN POS H	Closed
	Yes	Off	Off	Low	0 – v/Off	0 – v/Off	MIN POS L	Closed
		On	Off	Low	0 – v/Off	0 – v/Off	Modulating: MIN POS L to Full – Open	Modulating: Closed to Full – Open
		On	On	High	2SP DELAY (b); 24v/On	0 – v/Off (c)	Modulating: MIN POS H to Full – Open	Modulating: Closed to Full – Open

(a) Fan Speed for reference only; tins is not an input or output function of the W7220
(b) See Menu ADV SETUP – > 2SP FAN DELAY for details
(c) See Menu ADV SETUP – > STG# DLY. With Stage 3 delay enabled, control can turn on 2nd stage of cooling Y2 – O after delay if the call for Y2 – I has not been satisfied.

Table 12 – W7220 Input'/Output with Demand Control Ventilation (DCV)

INPUTS				Ref:	OUTPUTS			
DEMAND CONTROL VENTILATION	OUTSIDE AIR Good to economize?	Y1 – I	Y2 – 1	FAN SPD (a)	Mechanical Cooling Stage		Occupancy	
							OCC Yes	OCC No
					Y1 – O/1ST	Y2 – O/2ND	Outside Air Damper Position	
Below set	No	Off	Off	Low	0 – v/Off	0 – v/Off	VENTMIN L	Closed
		On	Off	Low	24 – v/On	0 – v/Off	VENTMIN L	Closed
		On	On	High	24 – v/On	24 – v/On	VENTMIN H	Closed
	Yes	Off	Off	Low	0 – v/Off	0 – v/Off	VENTMIN L	Closed
		On	Off	Low	0 – v/Off	0 – v/Off	Modulating: VENTMIN L to Full – Open	Modulating: Closed to Full – Open
		On	On	High	2SP DELAY (b); 24v/On	0 – v/Off (c)	Modulating: VENTMIN H to Full – Open	Modulating: Closed to Full – Open
Above set	No	Off	Off	Low	0 – v/Off	0 – v/Off	Modulating: VENTMIN L to VENTMAX L	Closed
		On	Off	Low	24 – v/On	0 – v/Off	Modulating: VENTMIN L to VENTMAX L	Closed
		On	On	High	24 – v/On	24 – v/On	Modulating: VENTMIN H to VENTMAX H	Closed
	Yes	Off	Off	Low	0 – v/Off	0 – v/Off	Modulating: VENTMIN L to VENTMAX L	Closed
		On	Off	Low	0 – v/Off	0 – v/Off	Modulating: VENTMIN L to Full – Open	Modulating: Closed to Full – Open
		On	On	High	2SP DELAY (b); 24v/On	0 – v/Off (c)	Modulating: VENTMIN H to Full – Open	Modulating: Closed to Full – Open

(a) Fan Speed for reference only; tins is not an input or output function of the W7220
(b) See Menu ADV SETUP – > 2SP FAN DELAY for details
(c) See Menu ADV SETUP – > STG# DLY. With Stage 3 delay enabled, control can turn on 2nd stage of cooling Y2 – O after delay if the call for Y2 – I has not been satisfied.

As space temperature falls, the thermostat will remove its call for second stage cooling; CTB terminal Y2 call is removed. The supply fan motor shifts back to Low Speed. The W7220 input Y2-I is also removed; the outside air damper limit is repositioned to between MIN POS L and 100% open. Output Y1-O is de-energized, stopping first stage mechanical cooling. As space temperature continues to fall and space cooling load is satisfied, the thermostat will remove its call for first stage cooling; CTB terminal Y1 call is removed. The W7220 input Y1-I is removed; free cooling mode ends. Outside air damper will move to MIN POS L if supply fan remains in operation (CONT FAN) or to closed if supply fan stops (AUTO FAN).

Compressor Low Temperature Lockout — The Compressor Low Temperature Lockout (setpoint LOW T LOCK, default 32°F (0°C)) will block compressor operation with economizer operation at outdoor temperature below this setpoint.

Power Exhaust — If accessory power exhaust is installed, the power exhaust fan motors will be energized by the economizer control as the dampers open above the setpoint EXH1 SET L during Low Speed operation or EXH1 SET H during High Speed fan operation. The EXH1 output will be de-energized as the dampers close below the EXH1 setpoint value.

Damper movement from full closed to full open (or vice versa) will take approximately 1-$^1/_2$ minutes.

Stage 3 Cooling

The W7220 controller also is capable of calling on a third stage of cooling by initiating the second stage of mechanical cooling if the concurrent operation of free cooling and first stage mechanical cooling does not satisfy the space thermostat's second stage cooling demand after a time delay period. See Menu ADVANCED SETUP, parameter STG3 DLY; default is 2.0 hours delay after Y1-O stage is energized. Combined Stage 3 operation (both mechanical cooling stages) will terminate when demand Y2 is satisfied.

Heating With EconoMi$er X

When the space temperature calls for heat (W1 closes), CTB terminal W1 is energized. The supply fan will start and run in High Speed. The W1 signal will connect toW7220 input AUX2I; the outside air damper will move to MIN POS H. Unit heating sequence will follow base unit control sequences.

Demand Control Ventilation

If a space or return air CO_2 sensor is connected to the Economize X control, a Demand Control Ventilation strategy will operate automatically.

When the space CO_2 level is below setpoint DCV SET (default 1100 ppm), the minimum ventilation position for the outside air damper will be reset to lower settings suited for offsetting CO_2 loads from space sources not including people. The settings will vary according to supply fan speed. When the supply fan speed is Low, the DCV minimum ventilation point is VENTMIN L. When the supply fan speed is High, the DCV minimum ventilation point is VENTMAX H.

As the CO_2 level in the space increases above the setpoint DCV SET (default 1100 ppm), the DCV ventilation position of the outside air damper will be increased proportionally, until the Maximum Ventilation setting is reached. The settings will vary according to supply fan speed. When the supply fan speed is Low, the DCV maximum ventilation point is VENTMAX L. When the supply fan speed is High, the DCV maximum ventilation point is VENTMAX H.

DCV operation will float between its VENTMIN and VENTMAX settings, never exceeding the VENTMAX limit as the space CO_2 level varies according to changes in people occupancy levels.

During concurrent demand for DCV and free cooling, the outdoor-damper will follow the higher demand condition from the DCV mode or from the free-cooling mode.

SETUP AND CONFIGURATION

Before being placed into service, the W7220 Economizer module must be setup and configured for the installed system according to project control specifications.

Inspect all wiring connections at the Economizer module's terminals, and verify compliance with the installation wiring diagrams.

Initial Menu Display

On initial start up, Honeywell displays on the first line and Economizer W7220 on the second line. After a brief pause, the revision of the software appears on the first line and the second line will be blank.

Time-out and Screensaver

When no buttons have been pressed for 10 minutes, the LCD displays a screen saver, which cycles through the Status items. Each Status items displays in turn and cycles to the next item after 5 seconds.

IMPORTANT: During setup, the Economizer module is live at all times.

Setup and configuration involves stepping through three menus and enabling required functions and re-selecting setpoints to meet project requirements. The menus used are SYSTEM SETUP, ADV SETUP and SETPOINTS.

Obtain a copy of the project control specifications before starting setup and configuration process.

NOTE: W7220 will be in the "set up" mode for the first 60 minutes after powered. If a sensor for OA air or S-bus device (sensor, actuator) is disconnected during the set up mode, the W7220 will not alarm that failure. The SAT sensor is a system "critical" sensor, if the SAT sensor is removed during the set up mode, the W7220 will alarm. After 60 minutes the W7220 controller will change to operation mode and all components removed or failed will alarm in the operation mode.

For this application with the 2-speed supply fan option, note that parameters EQUIPMENT, AUX2I and FAN TYPE have required settings. Check that these parameters are set at these required settings:

EQUIPMENT must be CONV
AUX2I must be W
FAN SPEED must be 2SPEED

Press the ⓐ (EXIT) button to exit the SYSTEM SETUP menu and return to top level menu. Scroll down to ADV SETUP menu and press ↵ (ENTER) button to enter this menu. Scroll down through the list of parameters and adjust settings as required. Be sure that the message CHANGE STORED appears with every change in parameter setting.

Press the ⓐ (EXIT) button to exit the ADV SETUP menu and return to top level menu. Scroll down to SETPOINTS menu and press ↵ (ENTER) button to enter this menu. Scroll down through the list of parameters and adjust settings as required. Be sure that the message CHANGE STORED appears with every change in parameter setting.

SETPOINT Defaults — The default setpoint values represent many years of successful experience with economizing systems. Any changes that represent significant deviations from the default values should be well considered.

DCV SETPOINT — The default value for DCV SET is 1100 ppm. It is recommended that this setpoint be adjusted down to 500 ppm (or CO_2 level of outdoor air plus 100 ppm, whichever is higher) to permit an earlier initiation of the DCV mode as space occupancy increases.

CHECKOUT

For checkout, review the Status of each configured parameter by observing the scrolling display from the Screensaver mode or by entering the STATUS menu.

Use the Checkout menu (see Table 2 on page 8) to test the damper operation and any configured outputs. Only items that are configured are shown in the Checkout menu.

To perform a Checkout test:

1. Scroll to the desired test in the Checkout menu using the the ▲ and ▼ buttons.
2. Press the ↵ button to select the item.
3. RUN? appears.
4. Press the ↵ button to start the test.
5. The unit pauses and then displays IN PROGRESS.
6. When the test is complete, DONE appears.
7. When all desired parameters have been tested, press the ⓐ (Menu up) button to end the test.

The Checkout tests can all be performed at the time of installation or at any time during the operation of the system as a test that the system is operable.

⚠ CAUTION

EQUIPMENT DAMAGE HAZARD

Failure to follow this caution may result in equipment damage.

Be sure to allow enough time for compressor startup and shutdown between checkout tests so that you do not short-cycle the compressors.

Status

Use the STATUS menu (see page 5) to check the parameter values for the various devices and sensors configured.

Calibration of Sensors

There are up to six sensor calibration settings available in the ADV SETUP menu (depending on which sensors are connected to the W7220). See page 7 for this menu.

Resetting All Defaults

Menu SYSTEM SETUP contains parameter FACTORY DEFAULT. This parameter will reset all setpoints back to factory default values.

To reset all values to defaults, scroll to the SYSTEM SETUP menu, enter the menu and scroll to parameter FACTORY DEFAULT. Enter this parameter and change the display value from NO to YES. Press ENTER ↵.

After resetting all values, scroll up in SYSTEM SETUP to ensure the three parameters requiring special values for use with 2-speed fan system are correct.

TROUBLESHOOTING

Power Up Delay

Upon power up (or after a power outage or brownout), the W7220 controller module begins a 5 minute power up delay before enabling mechanical cooling.

Power Loss (Outage or Brownout)

All setpoints and advanced settings are restored after any power loss or interruption.

NOTE: If the power goes below 18 Vac, the W7220 controller module assumes a power loss and the 5 minute power up delay will become functional when power returns above 18 Vac.

Alarms

The Economizer module provides alarm messages that display on the 2-line LCD.

NOTE: Upon power up, the module waits 60 minutes before checking for alarms. This allows time for all the configured devices (e.g. sensors, actuator) to become operational. The exception is the SAT sensor which will alarm immediately.

If one or more alarms are present and there has been no keypad activity for at least 5 minutes, the Alarms menu displays and cycles through the active alarms. You can also navigate to the Alarms menu at any time. The list of alarms included in Table 2 (see page 8) is not a complete list of available alarm messages. Each sensor has alarms for temperature, humidity and enthalpy. The list of possible alarms will vary from unit to unit as different sensors are connected.

Clearing Alarms

Once the alarm has been identified and the cause has been removed (e.g. replaced faulty sensor). the alarm can be cleared from the display.

To clear an alarm, perform the following:

1. Navigate to the desired alarm.
2. Press the ↵ button.
3. ERASE? displays.
4. Press the ↵ button.
5. ALARM ERASED displays.
6. Press the ⓪ (Menu up/Exit) button to complete the action and return to the previous menu.

NOTE: If the alarm still exists after you clear it, it is redisplayed within 5 seconds.

Table 13 – Operating Issues and Concerns

Issue or Concern	Possible Cause and Remedy
My outdoor temperature reading on the STATUS menu is not accurate.	Check the sensor wiring: • Enthalpy sensors are to be wired to the S–Bus terminals. • Temperature sensors are to be wired to the OAT and MAT terminals.
If my enthalpy sensor drifts in accuracy over time, can I re–calibrate it?	The sensor are not able to be re–calibrated in the field. However there is a menu item under the ADVANCED menu where you are able to input a limited offset in temperature and humidity for each sensor you have connected to the economizer.
Can I go back to factory defaults and start over?	Under the SYSTEM SETUP menu you can change the setpoints to the factory defaults.
Will I be able to see the LCD screen when it is in the unit?	The LCD screen has a backlight that is always illuminated.
What is a good setpoint for the Supply Air Temperature (SAT)?	The supply air temperature is the temperature of air that you want to supply to the space. In a commercial building, this is between 50 to 55°F (10 to 13°C). The supply air is the mixing of the return air and the outdoor air.
I am using enthalpy sensors. Why did the control ask me to input a dry bulb changeover temperature?	In the event the humidity sensor in the enthalpy sensors fails, the backup algorithm in the control is to default to the temperature sensor in the enthalpy sensor.
In checkout, the outdoor damper closes when i command it to open.	Check the actuator linkage or rotation. In the CHECKOUT mode, the outdoor damper should drive open or closed with the return air damper having the opposite effect.
How do I set my minimum position?	The minimum position is set using the VENTMIN and VENTMAX setup in the SETPOINTS menu. VENTMIN is the minimum ventilation required when using an occupancy sensor and VENTMAX is the minimum ventilation when not using an occupancy sensor for Demand Control Ventilation. The VENTMAX position is set the same as with the potentiometer on the analog economizers and is the output voltage to the damper actuator. The range is 2 Vdc closed OA damper and 10 Vdc open OA damper.
What if my damper does not go completely closed in the checkout operation?	Check the damper linkage or hub to make sure the damper is able to close completely.
How do I set the OCC?	There are two setting for the OCC setting, INPUT and ALWAYS. INPUT is from the space thermostat, if it has an occupancy output. ALWAYS is the unit in the occupied mode, if the economizer is powered (fan on).
Does the economizer save my program values if the unit loses power?	Yes, once the changes are stored in the controller they will be stored until they are changed by the operator.
If the unit is left in checkout, how long will the unit stay in checkout mode without input?	The unit will remain in checkout for 10 minutes, then return to normal operation.

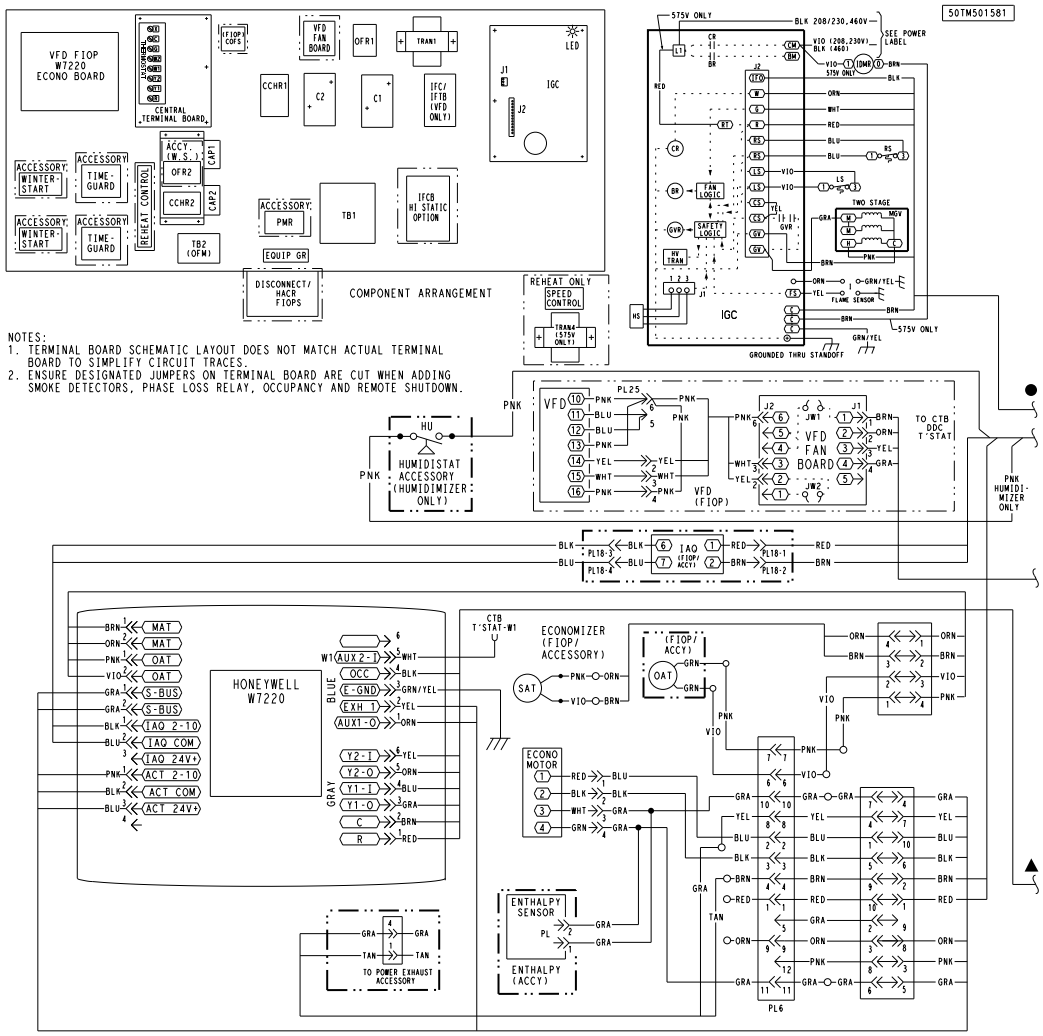

C11549

Fig. 11 - Typical Economizer X Wiring Diagram

CONTROL SET POINT AND CONFIGURATION LOG

Project Name/Location: _____

Model Number: _____

Serial Number: _____

Date: _____

Technician _____

Menu Tables:

1. SYSTEM SETUP
2. ADVANCED SETUP
3. SETPOINTS

Menu 1: System Setup

Parameter	Project Value	Parameter Default Value	Parameter Range and Increment	Notes
INSTALL		01/01/10		Display order = MM/DD/YY Setting order = DD, MM, then YY
UNITS DEG		_F	_F or _C	Sets economizer controller in degrees Fahrenheit or Celsius.
EQUIPMENT		CONV	CONV required for 2−speed mode	CONV = conventional; HP O/B = Enable Heat Pump mode; not available with 2−speed See Menu Note 4 (on page 8)
AUX2 I		W	W required for 2−speed mode	W = Informs controller that system is in heating mode. SD = Enables configuration of shutdown (not available on 2−speed) See Menu Note 4 (on page 8)
FAN TYPE		2speed	2speed required	Sets the economizer controller for operation of 1 speed or 2 speed indoor fan system. See Menu Note 4 (on page 8)
FAN CFM		5000cfm	100 to 15000 cfm;	UNIT DESIGN AIRFLOW (CFM) Enter ONLY if using DCVCAL ENA = AUTO The value is found in the Project Submittal documents for the specific RTU.
AUX OUT		NONE	NONE ERV EXH2 SYS	Select OUTPUT for AUX1 O relay NONE = not configured (output is not used) ERV = Energy Recovery Ventilator EXH2 = second damper position relay closure for second exhaust fan SYS = use output as an alarm signal
OCC		INPUT	INPUT or ALWAYS	OCCUPIED MODE BY EXTERNAL SIGNAL When using a setback thermostat with occupancy out (24 Vac), the 24−Vac is input to the OCC terminal. RTU control circuit provides 24−Vac to OCC through OCCUPIED terminals on Central Terminal Board. (see Menu Note 2 (on page 8)
FACTORY DEFAULT		NO	NO or YES	Resets all set points to factory defaults when set to YES. LCD will briefly flash YES and change to NO but all parameters will change to the factory default values. **RECHECK AUX2 I and FANTYPE for required 2−speed values.**

Menu 2: Advanced Setup

Parameter	Project Value	Parameter Default Value	Parameter Range and Increment	Notes
MA LO SET		45°F (7°C)	35 to 55°F; (2 to 13°C) incremented by 1°	SUPPLY AIR TEMPERATRUE LOW LIMIT Temperature to achieve Freeze Protection (close damper and alarm if temperature at SAT location falls below setup value)
FREEZE POS		CLO	CLO or MIN	FREEZE PROTECTION DAMPER POSITION Damper position when freeze protection is active CLO =closed MIN = MIN POS or VENTMAX
CO2 ZERO		0ppm	0 to 500 ppm: Increment by 10	CO_2 ppm level to match CO2 Sensor start level.
CO2 SPAN		2000ppm	1000 to 3000 ppm; Increment by 50	CO_2 ppm span to match CO2 sensor.
STG3 DLY		2.0h	0 min, 5 min, 15 min, then 15 min intervals. Up to 4 h or OFF	COOLING STAGE 3 DELAY Delay after stage 2 for cool has been active. Turns on 2nd stage of cooling when economizer is 1st stage and mechanical cooling is 2nd
SD DMPR POS		CLO	CLO or OPN	Function NOT AVAILABLE with 2–speed mode
DCVCAL ENA		MAN	MAN (manual)	Turns on the DCV automatic control of the dampers. Resets ventilation
MAT T CAL	0.0	1.0°F (or °C)	+/– 2.5°F (+/–1.4°C)	SUPPLY AIR TEMPERATURE CALIBRATION Allows for the operator to adjust for an out of calibration supply air temperature (SAT) sensor
OA T CAL	2.0	3.0°F (or °C)	+/– 2.5°F (+/–1.4°C)	OUTSIDE AIR TEMPERATURE CALIBRATION Allows for the operator to adjust for an out of calibration outside air temperature (OAT) sensor
OA H CAL		0% RH	+/– 10% RH	OUTSIDE AIR HUMIDITY CALIBRATION Allows for the operator to adjust for an out of calibration of outside air enthalpy sensor
RA T CAL	4.0	5.0°F (or °C)	+/– 2.5°F (+/–1.4°C)	RETURN AIR TEMPERATURE CALIBRATION Allows for the operator to adjust for an out of calibration return air temperature (RA) sensor
RA H CAL		0% RH	+/– 10% RH	RETURN AIR HUMIDITY CALIBRATION Allows for the operator to adjust for an out of calibration return air enthalpy sensor
DA T CAL	0.0	1.0°F (or °C)	+/– 2.5°F (+/–1.4°C)	DISCHARGE AIR TEMPERATURE CALIBRATION Allows for the operator to adjust for an out of calibration discharge air temperature (DAT) sensor
2SP FAN DELAY		5 Minutes	0 to 20 minutes in 1 minute increments	TIME DELAY ON 2ND STAGE ECONOMIZING While in the Economizing mode, this is the delay between thermostat Y2 call and Y1–O output to mechanical cooling stage, to allow high speed fan operation to attempt to cool space first.

Menu 3: Setpoints

Parameter	Project Value	Parameter Default Value	Parameter Range and Increment	Notes
MAT SET		53°F (12°C)	38 to 65°F; (3 to 18°C) increment by 1°	SUPPLY AIR SETPOINT Setpoint determines where the economizer will modulate the OA damper to maintain the supply air temperature. See Menu Note 2 (on page 8).
LOW T LOCK		32°F (0°C)	−45 to 80°F (−43 to 27°C) increment by 1°	COMPRESSOR LOW TEMPERATURE LOCKOUT Setpoint determines outdoor temperature when the mechanical cooling cannot be turned on.
DRYBLB SET		63°F (17°C)	48 to 80°F; (9 to 27°C) increment by 1°	OA DRY BULB TEMPERATURE CHANGEOVER SETPOINT Setpoint determines where the economizer will assume outdoor air temperature is good for free cooling; e.g.: at 63°F (17°C), unit will economize at 62°F (16.7°C) and below and not economize at 64°F (17.8°C) and above. There is a 2°F (1.1°C) deadband. See Menu Note 3 (on page 8).
ENTH CURVE		ES3	ES1, ES2, ES3, ES4, or ES5	ENTHALPY CHANGEOVER CURVE (Requires enthalpy sensor option) Enthalpy boundary “curves” for economizing using single enthalpy.
DCV SET		1100ppm	500 to 2000 ppm; increment by 100	DEMAND CONTROL VENTILATION SETPOINT Displays only if CO_2 sensor is connected. Setpoint for Demand Control Ventilation of space. Above the setpoint, the OA dampers will modulate open to bring in additional OA to maintain a space ppm level below the setpoint.
MIN POS L		6.0 V	2 to 10Vdc	ENTILATION MINIMUM POSITION AT LOW SPEED Displays ONLY if a CO2 sensor is NOT connected.
MIN POS H		4.4 V	2 to 10Vdc	VENTILATION MINIMUM POSITION AT HIGH SPEED Displays ONLY if a CO2 sensor is NOT connected.
VENTMAX L		6.0 V	2 to 10Vdc	DCV MAXIMUM DAMPER POSITION AT LOW SPEED (Requires CO_2 sensor connected)
VENTMAX H		4.4 V	2 to 10Vdc	DCV MAXIMUM DAMPER POSITION AT HIGH SPEED (Requires CO_2 sensor connected)
VENTMIN L		3.7 V	2 to 10Vdc	DCV MINIMUM DAMPER POSITION AT LOW SPEED (Requires CO_2 sensor connected)
VENTMIN H		2.8 V	2 to 10Vdc	DCV MINIMUM DAMPER POSITION AT HIGH SPEED (Requires CO_2 sensor connected)
ERV OAT SP		32°F (0°C)	0 to 50°F; (−18 to 10°C) increment by 1°	ENERGY RECOVERY VENTILATION UNIT OUTDOOR AIR TEMPERATURE SETPOINT Only when AUX1 O = ERV
EXH1 L SET		65%	0 to 100%; increment by 1	EXHAUST FAN STAGE 1 SETPOINT AT LOW SPEED Setpoint for OA damper position when exhaust fan1 is powered by the economizer.
EXH1 H SET		50%	0 to 100%; increment by 1	EXHAUST FAN STAGE 1 SETPOINT AT HIGH SPEED Setpoint for OA damper position when exhaust fan1 is powered by the economizer.
EXH2 L SET		80%	0 to 100%; increment by 1	EXHAUST FAN STAGE 2 SETPOINT AT LOW SPEED Setpoint for OA damper position when exhaust fan 2 is powered by the economizer. Only used when AUX1−O is set to EHX2.
EXH2 H SET		75%	0 to 100%; increment by 1	EXHAUST FAN STAGE 2 SETPOINT AT HIGH SPEED Setpoint for OA damper position when exhaust fan 2 is powered by the economizer. Only used when AUX1−O is set to EHX2.

Manufacturer reserves the right to change, at any time, specifications and designs without notice and without obligations.