N5H9V
Variable Speed Heat Pumps
With R-454B Refrigerant
2 to 5 Nominal Tons

Installation Instructions

NOTE: Read the entire instruction manual before starting the installation.
Unit **MUST** be installed with rated R-454B indoor with factory approved dissipation control board installed.

PAGE NO.

SAFETY CONSIDERATIONS 2
VFD Cover 2
General 3
Installation 3
Step 1 – Check Equipment and Job Site 4
Unpack Unit 4
Inspect Equipment 4
Step 2 – Install on a Solid, Level Mounting Pad 4
Step 3 – Clearance Requirements 4
Step 4 – Operating Ambient 4
Step 5 – Elevate Unit 4
Step 6 – Make Piping Connections 4
Table 1 – Refrigerant Connections and Recommended Liquid and Vapor Tube Diameters (in.) 5
Outdoor Unit Connected to Factory-Approved R-454B Indoor Unit 5
Mechanical Line Set Connections 5
Install Liquid-Line Filter Drier - Indoor 5
Refrigerant Tubing Connection - Outdoor 5
No Installation of Adapter Tube 5
Sweat Connections 5
Pressure Test Tubing and Indoor Coil 6
Evacuate Refrigerant Tubing and Indoor Coil 6
Deep Vacuum Method 6
Mandatory Requirements 6
Pressure Proof Check 6
Leak Check 6
Final Tubing Check 6
Step 7 – Make Electrical Connections 6
Route Ground and Power Wires 6
Connect Ground and Power Wires 6
Connect Control Wiring 7
Final Wiring Check 8
Step 8 – Compressor Stator Heat 8
Step 9 – Install Accessories 8
Step 10 – Start-Up & Charging 8
Airflow Selections (ECM Furnaces) 9
Airflow Selection for Variable Speed Furnaces (non-communicating) 9
Airflow Selection for FTMA5 Fan Coils (non-communicating) 9
Outdoor Unit Set-Up and Start-Up 9
Table 2 – DIP Switch Setting Description 9
Refrigerant Charging Modes - Switch 1 9
Model Configuration Selection - Switch 2 10
PLC Mode Fault Displays - Switches 3 and 4 10
Defrost Switches 5 and 6 10
System Control Mode - Switch 7 10
Status Check - Switch 8 10
Follow these steps to properly start up the system 10
Table 3 – Required Liquid Line Temperature for R-454B 11
Post Charging 11
Table 4 – Minimum Room Area Charging Table 11
Step 11 – Sequence of Operation 11
Step 12 – Major Components 12
Primary Control Module 12
Green Communications (COMM) Light 12
Amber Status Light 13
5x7 LED Matrix 13
Variable Frequency Drive (VFD) 13
Variable Speed Compressor 13
Time Delays 13
Heating Electronic Expansion Valve (EXV-H) 13
Variable Speed Fan Motor 13
High Pressure Switch 13
Outdoor Pressure Transducers 13
Stator Heater Operation 13
Troubleshooting 14
Model Plug 14
Table 5 – Model Plug Information 14
Pressure Switch Protection 14
Compressor Protection 14
Line Voltage Diagnostics 14
Forced Defrost Pins 14
Temperature Thermistors 14
Table 6 – 10K Thermistor Resistance Values 14
Table 7 – 50K Thermistor Resistance Values 14
Outdoor Air Temperature (OAT) 14
Outdoor Coil Temperature (OCT) 15
Liquid Line Temperature (LLT) 15
Outdoor Suction Temperature (OST) 15
Outdoor Discharge Line Temperature (ODT) 15
Failed Thermistor Default Operation 16
Variable Speed Compressor Winding Resistance 16
Table 8 – Variable Speed Compressor Resistances winding resistance at 68°F (20°C) 16
Fan Motor 16
Status Codes 16
Status Code Recall Mode 16
Table 9 – Diagnostic Code Table 17
Table 10 – Malfunction Lockout Duration 18
FINAL CHECKS 19
REPAIRING REFRIGERANT CIRCUIT 19
CARE AND MAINTENANCE 19
R-454B Refrigerant — Quick Reference Guide 20

SAFETY CONSIDERATIONS

This appliance shall only be installed by EPA qualified personnel and have Section 608 Technician Certification. This appliance is not intended for use by persons (including children) with reduced physical, sensory, or mental capabilities, or lack of experience and knowledge, unless they have been given supervision or instruction concerning use of the appliance by a person responsible for their safety.

Improper installation, adjustment, alteration, service, maintenance, or use can cause explosion, fire, electrical shock, or other conditions which may cause death, personal injury, or property damage. Consult a qualified installer, service agency, or your distributor or branch for information or assistance. The qualified installer or agency must use factory-authorized kits or accessories when modifying this product. Refer to the individual instructions packaged with the kits or accessories when installing.

Follow all safety codes. Wear safety glasses, protective clothing, and work gloves. Use quenching cloth for brazing operations. Have a dry powder or CO_2 fire extinguisher available. Read these instructions thoroughly and follow all warnings or cautions included in literature and attached to the unit. Consult local building codes and current editions of the National Electrical Code (NEC) NFPA 70. In Canada, refer to current editions of the Canadian electrical code CSA 22.1.

Proper tools should be used that are designed for the refrigerant of the unit being installed. For A2L refrigerants, non-sparking tools are required. A refrigerant detector should be used prior to and during the installation process to check for leaks. Open flames or other ignition sources should not be present except during brazing. Brazing should only take place on refrigerant tubes that are open to the atmosphere or have been properly evacuated.

Recognize safety information. This is the safety-alert symbol ⚠. When you see this symbol on the unit and in instructions or manuals, be alert to the potential for personal injury. Understand these signal words; WARNING, and CAUTION. These words are used with the safety-alert symbol. WARNING signifies hazards which could result in personal injury or death. CAUTION is used to identify unsafe practices which would result in minor personal injury or product and property damage. NOTE is used to highlight suggestions which will result in enhanced installation, reliability, or operation.

⚠ WARNING

EXPLOSION HAZARD

Failure to follow this warning could result in death, serious personal injury, and/or property damage.

Never use air or any gas containing oxygen for leak testing or operating refrigerant compressors. Pressurized mixtures of air or gases containing oxygen can lead to an explosion. Never allow compressor suction pressure to operate in a vacuum with service valves closed. See service manual for pump-down instructions.

⚠ CAUTION

CUT HAZARD

Failure to follow this caution may result in personal injury.

Sheet metal parts may have sharp edges or burrs. Use care and wear appropriate protective clothing and gloves when handling parts.

⚠ WARNING

ELECTRICAL SHOCK HAZARD

Failure to follow this warning could result in personal injury or death.

Before installing, modifying, or servicing system, main electrical disconnect switch must be in the OFF position. There may be more than 1 disconnect switch. Lock out and tag switch with a suitable warning label.

⚠ WARNING

PERSONAL INJURY AND ENVIRONMENTAL HAZARD

Failure to follow this warning could result in personal injury or death.

Do not use means to accelerate the defrosting process or to clean, other than those recommended by the manufacturer.

The appliance shall be stored in a room without continuously operating ignition sources (for example:

open flames, an operating gas appliance or an operating electric heater.

Do not pierce or burn.

Be aware that refrigerants do not contain an odor.

⚠ WARNING

ELECTRICAL HAZARD - HIGH VOLTAGE!

Failure to follow this warning could result in personal injury or death.

Electrical components may hold charge. D**O NOT** remove control box cover for 2 minutes after power has been removed from unit.

PRIOR TO TOUCHING ELECTRICAL COMPONENTS:

Verify zero (0) voltage at VFD connections shown on control box cover.

VFD Cover

IMPORTANT: The VFD cover should NEVER be removed because there is no reason to remove the VFD cover to access the VFD. The VFD has limited serviceability Refer to the Service Manual for details on field replaceable parts. A replacement cover is provided with a replacement VFD.

⚠ WARNING

UNIT OPERATION AND SAFETY HAZARD

Failure to follow this warning could result in personal injury or equipment damage.

R-454B refrigerant systems operate at higher pressures than standard R-22 and similar pressures to R-410A systems. Do not use R-22 or R-410A service equipment or components on R-454B refrigerant equipment.

General

Acronyms used in this publication

Acronym	Description
PCM	Primary Control Module
VFD	Variable Frequency Drive
DPT	Discharge Pressure Transducer
SPT	Suction Pressure Transducer
ODT	Outdoor Discharge Line Temperature
OST	Outdoor Suction Temperature
OCT	Outdoor Coil Temperature
LLT	Liquid Line Temperature
OAT	Outdoor Air Temperature
PLC	24VAC Power Line Communications
RVS	Reversing Valve
EXV-H	Heating Electronic Expansion Valve

NOTE: In some cases noise in the living area has been traced to gas pulsations from improper installation of equipment.

1. This unit is intended to be installed in a location that is 10,000 feet (3000 meters) above sea level or lower.
2. Locate unit away from windows, patios, decks, etc. where unit operation sound may disturb customer.
3. Variable speed units have a wide airflow range. Consider ductwork limitations at both high and low airflows.
4. In noise sensitive applications (such as bedrooms), when a lineset is mounted to ceiling joists or floor joists, the outdoor unit must be located at least 10 ft (3.05 m) away. If this is not possible, create a line set configuration with enough bends to provide 10 ft (3.05 m) of total line set length outside the dwelling.
5. Ensure that vapor and liquid tube diameters are appropriate for unit capacity (see Table 1).
6. Run refrigerant tubes with no bends with centerline bend radius less than 2.5 times the external pipe diameter.
7. Leave some slack between structure and unit to absorb vibration.
8. When passing refrigerant tubes through the wall, seal opening with RTV or other pliable silicon-based caulk (see Fig. 1).
9. Avoid direct tubing contact with water pipes, duct work, floor joists, wall studs, floors, and walls.
10. Do not suspend refrigerant tubing from joists and studs with a rigid wire or strap which comes in direct contact with tubing (see Fig. 1).
11. Ensure that tubing insulation is pliable and completely surrounds vapor tube.
12. When necessary, use hanger straps which are 1 in. (25 mm) wide and conform to shape of tubing insulation. (See Fig. 1)
13. Isolate hanger straps from insulation by using metal sleeves bent to conform to shape of insulation.
14. Provision shall be made for expansion and contraction of long runs of piping.
15. Piping and fittings shall be protected as far as possible against adverse environmental effects. For example, the accumulation of dirt and debris.
16. Piping should be installed to reduce the likelihood of hydraulic shock damaging the system.
17. Certified piping and components must be used in order to protect against corrosion.
18. Flexible pipe elements shall be protected against mechanical damage, excessive stress by torsion, or other forces. They should be checked for mechanical damage annually.
19. Piping material, routing, and installation shall be include protection from physical damage in operation and service, and be in compliance with the national and local codes and standards of the installation site.
20. When setting up refrigerant piping, precautions shall be taken to avoid excessive vibration or pulsation.

⚠ CAUTION

EQUIPMENT DAMAGE HAZARD

Failure to follow this caution may result in equipment damage.

If proper lineset routing techniques are not followed, variable speed systems can be susceptible to lineset transmitted noise inside the dwelling and, in extreme cases, tubing breakage.

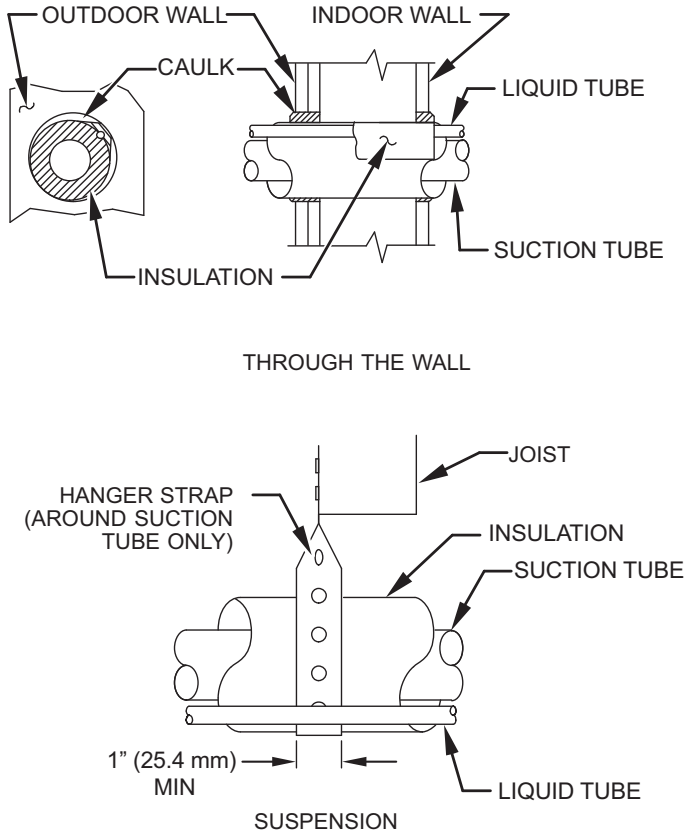

Fig. 1 – Connecting Tubing Installation

When outdoor unit is connected to factory-approved R-454B indoor unit, outdoor unit contains the approximate system refrigerant charge for operation with AHRI rated indoor unit when connected by 15 ft (4.57 m) of field-supplied or factory accessory tubing and factory-supplied filter drier. For all sizes, adjust charge by adding or removing 0.6 oz/ft of 3/8-in liquid line above or below 15 ft, respectively.

For proper unit operation, check refrigerant charge using charging information in the Startup & Charge section of this instruction.

IMPORTANT: Liquid-line size is 3/8-in. OD for all N5H9V applications including long line applications. Refer to Residential Piping and Long Line Guideline for further information.

IMPORTANT: Always install the factory-supplied liquid-line filter drier. Obtain replacement filter driers from your distributor or branch.

Installation

IMPORTANT: All split system and packaged heat pumps must be installed pursuant to applicable regional efficiency standards issued by the Department of Energy.

This product is designated as Demand Response ready only when installed with a rated indoor combination and the Ion Gray Smart Thermostat featuring SmartSense™. The Demand Response control uses OpenADR 2.0 as defined in AHRI Standard 1380. Refer to the AHRI directory (www.ahridirectory.org) for the most up-to-date ratings information.

Step 1 – Check Equipment and Job Site

Unpack Unit

Move to final location. Remove carton taking care not to damage unit.

Inspect Equipment

File claim with shipping company prior to installation if shipment is damaged or incomplete. Locate unit rating plate on unit corner panel. It contains information needed to properly install unit. Check rating plate to be sure unit matches job specifications.

Step 2 – Install on a Solid, Level Mounting Pad

If conditions or local codes require the unit be attached to pad, tie down bolts should be used and fastened through knockouts provided in unit base pan. Refer to unit mounting pattern in Fig. 2 to determine base pan size and knockout hole location.

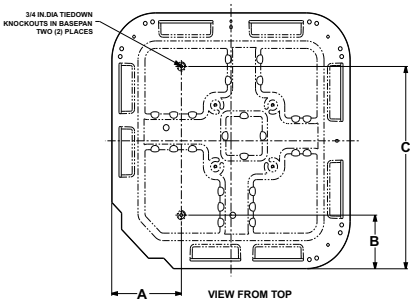

UNIT BASE PAN Dimension in. (mm)	TIEDOWN KNOCKOUT LOCATIONS in. (mm)		
	A	B	C
35 X 35 (889 X 889)	9–1/8 (231.8)	6–9/16 (166.7)	28–7/16 (722.3)

Fig. 2 – Tie-down Knockout Locations

For hurricane tie downs, contact distributor for details and PE (Professional Engineer) Certification, if required.

On rooftop applications, mount on level platform or frame. Place unit above a load-bearing wall and isolate unit and tubing set from structure. Arrange supporting members to adequately support unit and minimize transmission of vibration to building. Consult local codes governing rooftop applications.

Roof mounted units exposed to winds above 5 mph may require wind baffles. Consult the Service Manual - Residential Split System Air Conditioners and Heat Pumps Using R-454B Refrigerant for wind baffle construction.

NOTE: Unit must be level to within ±2° (±3/8 in./ft, ±9.5 mm/m.) per compressor manufacturer specifications.

Step 3 – Clearance Requirements

When installing, allow sufficient space for airflow clearance, wiring, refrigerant piping, and service. Allow 24 in. (609.6 mm) clearance to service end of unit and 48 in. (1219.2 mm) above unit. For proper airflow, a 6-in. (152.4 mm) clearance on 1 side of unit and 12-in. (304.8 mm) on all remaining sides must be maintained. Maintain a distance of 24 in. (609.6 mm) between units. Position so water, snow, or ice from roof or leaves cannot fall directly on unit.

On rooftop applications, locate unit at least 6 in. (152.4 mm) above roof surface.

Step 4 – Operating Ambient

The minimum outdoor operating ambient in cooling mode is 32°F (0°C), and no additional kits are required.

The minimum outdoor operating ambient in heating mode is -10°F (-23.3°C).

Step 5 – Elevate Unit

Elevate unit per local climate and code requirements to provide clearance above estimated snowfall level and ensure adequate drainage of unit.

⚠ CAUTION

UNIT OPERATION HAZARD

Failure to follow this caution may result in equipment damage or improper operation.

Do not allow water and/or ice to build up in base pan.

⚠ CAUTION

UNIT OPERATION HAZARD

Failure to follow this caution may result in equipment damage or improper operation.

Locate the unit in such a way that it is stable in all circumstances including adverse weather conditions.

Step 6 – Make Piping Connections

⚠ WARNING

PERSONAL INJURY AND ENVIRONMENTAL HAZARD

Failure to follow this warning could result in personal injury or death.

Relieve pressure and recover all refrigerant before system repair or final unit disposal. Use all service ports and open all flow-control devices, including solenoid valves.

Federal regulations require that refrigerant is not vented into the atmosphere. Recover during system repair or final unit disposal.

⚠ CAUTION

UNIT DAMAGE HAZARD

Failure to follow this caution may result in equipment damage or improper operation.

Do not leave system open to atmosphere any longer than minimum required for installation. POE oil in compressor is extremely susceptible to moisture absorption. Always keep ends of tubing sealed during installation.

⚠ CAUTION

UNIT DAMAGE HAZARD

Failure to follow this caution may result in equipment damage or improper operation.

If ANY refrigerant tubing is buried, provide a 6 in. (152.4 mm) vertical rise at service valve. Refrigerant tubing lengths up to 36 in. (914.4 mm) may be buried without further special consideration. Do not bury lines longer than 36 in. (914.4 mm).

Outdoor units may be connected to indoor section using accessory tubing package or field-supplied refrigerant grade tubing of correct size and condition. Federal regulations require that refrigerant is not vented into the atmosphere. Recover during system repair or final unit disposal. For tubing requirements beyond 80 ft. (24.38 m), substantial capacity and performance losses can occur. Follow the pipe sizing recommendations in the N5H9V Product Data to manage these losses.

Refer to Table 1 for field tubing diameters. Refer to the Product Data for accessory requirements.

Refrigerant pipe should be installed with the minimum length possible and practical for the application. Piping should be protected from physical damage in operation and in service and be in compliance with national and local codes such as ASHRAE 15, ASHRAE 15.2, IAPMO Uniform Mechanical Code, ICC International Mechanical Code, or CSA B52. When piping is installed through studs in a wall, steel plates should be used for protection with a minimum thickness of 16 gauge.

All field joints shall be accessible for inspection prior to being covered or enclosed.

Table 1 – Refrigerant Connections and Recommended Liquid and Vapor Tube Diameters (in.)

UNIT SIZE	LIQUID		VAPOR*		
	Connection Diameter	Tube Diameter	Connection Diameter	Max (Rated) Diameter	Minimum Tube Diameter
N5H9V024	3/8	3/8	3/4	3/4	5/8
N5H9V036	3/8	3/8	7/8	7/8	5/8
N5H9V048	3/8	3/8	7/8	1-1/8† (7/8)	3/4
N5H9V060	3/8	3/8	7/8	1-1/8†	3/4

*Units are rated with 25 ft. (7.6 m) of lineset. See Product Data sheet for performance data when using different size and length line sets.
†Required maximum diameter for applications using greater than 25 ft. (7.6 m) of lineset is 7/8 in.

Notes:
1.Do not apply capillary tube indoor coils to these units.

Outdoor Unit Connected to Factory-Approved R-454B Indoor Unit

When outdoor unit is connected to factory-approved R-454B indoor unit, outdoor unit contains the correct system refrigerant charge for operation with AHRI Designated Tested Combination indoor unit when connected by 15 ft (4.57 m) of field-supplied or factory accessory tubing and factory-supplied filter drier. Check refrigerant charge for maximum efficiency.

NOTE: If the indoor furnace coil width is more than the furnace casing width, refer to the indoor coil Installation Instructions for transition requirements.

Mechanical Line Set Connections

If using mechanical or crimp-type line set connections, follow crimp tool manufacturer's instructions.

NOTE: Should the use of mechanical fittings cause failure of the fittings or failure of the equipment, such would not be covered under the standard warranty.

Install Liquid-Line Filter Drier - Indoor

Refer to Fig. 3 and install filter drier as follows:

1. Braze 5-in. (127 mm) liquid tube to the indoor coil.
2. Wrap filter drier with damp cloth.
3. Braze filter drier to above 5-in. (127 mm) liquid tube.
4. Connect and braze liquid refrigerant tube to the filter drier.

⚠ CAUTION

UNIT DAMAGE HAZARD

Failure to follow this caution may result in unit damage or improper operation.

Installation of filter drier in liquid line is required.

Filter drier must be wrapped in a heat-sinking material such as a wet cloth while brazing

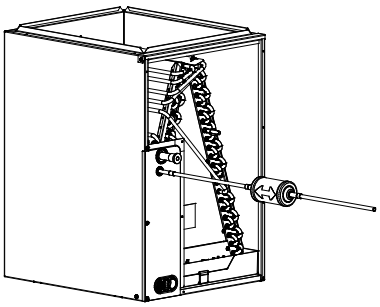

Fig. 3 – Liquid-Line Filter Drier

Refrigerant Tubing Connection - Outdoor

Connect vapor tube to fitting on outdoor unit vapor service valves (see Table 1).

No Installation of Adapter Tube

Although it is a heat pump this unit has a standard AC liquid service valve. An EXV inside the unit serves as the heating expansion device.

Sweat Connections

⚠ CAUTION

UNIT DAMAGE HAZARD

Failure to follow this caution may result in equipment damage or improper operation.

- Use a brazing shield
- Wrap service valves with wet cloth or heat sink material.

⚠ WARNING

FIRE HAZARD

Failure to follow this warning could result in personal injury, death and/or property damage.

Refrigerant and oil mixture could ignite and burn as it escapes and contacts brazing torch. Make sure the refrigerant charge is properly removed from both the high and low sides of the system before brazing any component or lines.

⚠ CAUTION

BURN HAZARD

Failure to follow this caution may result in personal injury.

Components will be HOT after brazing. Wear appropriate personal protective equipment and allow to cool before handling parts and equipment.

Use refrigerant grade tubing. Service valves are closed from factory and ready for brazing. Clean line set tube ends with emery cloth or steel brush. Remove any grit or debris.

Insert line set tube ends into service valve tube stubs.

Apply heat absorbing paste or heat sink product between service valve and joint. Wrap service valves with a heat sinking material such as a wet cloth.

Braze joints using a Sil-Fos or Phos-copper alloy. Consult local code requirements. Refrigerant tubing and indoor coil are now ready for leak testing. This check should include all field and factory joints.

Pressure Test Tubing and Indoor Coil

Refrigerant tubes and indoor coil should be pressure tested with an inert gas such as nitrogen. Pressurize the system with the inert gas to the Low Side Test Pressure listed on the outdoor unit rating plate

⚠ WARNING

EXPLOSION HAZARD

Failure to follow this warning could result in equipment damage or improper operation

Never exceed the test pressures listed on the rating plate when pressure testing an outdoor unit.

Evacuate Refrigerant Tubing and Indoor Coil

⚠ CAUTION

UNIT DAMAGE HAZARD

Failure to follow this caution may result in equipment damage or improper operation.

Never use the system compressor as a vacuum pump.

Refrigerant tubes and indoor coil should be evacuated using the recommended deep vacuum method of 500 microns. The alternate triple evacuation method may be used. See Service Manual for triple evacuation method. Always break a vacuum with dry an inert gas prior to opening the refrigerant system for servicing.

Deep Vacuum Method

The deep vacuum method requires a vacuum pump capable of pulling a vacuum of 500 microns and a vacuum gauge capable of accurately measuring this vacuum depth. The deep vacuum method is the most positive way of assuring a system is free of air and liquid water.

A tight, dry system will hold a vacuum of 1,000 microns after approximately 7 minutes (See Fig. 4).

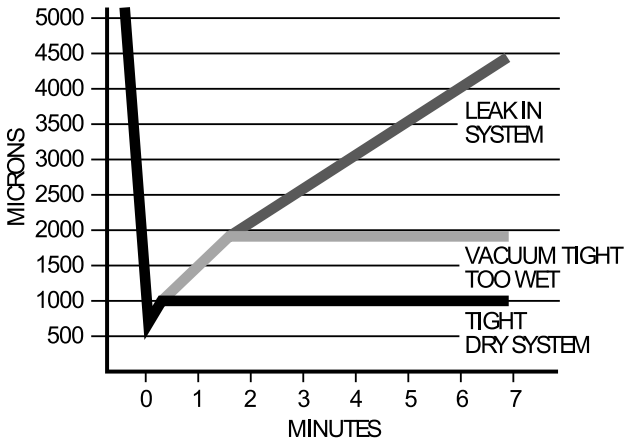

Fig. 4 – Deep Vacuum Graph

Mandatory Requirements

Pressure Proof Check

Refrigerant tubes and indoor coil should be pressure tested with an inert gas such as nitrogen. Pressurize the system with the inert gas to the Low Side Test Pressure listed on the outdoor unit rating plate

1. Perform a pressure check of the unit with an inert gas charge of about 200 psi, not to exceed the Low Side Test Pressure.
2. The holding charge must NOT decrease in pressure for 1 hour, as indicated by the test gauge. The measuring test gauge resolution not exceeding 5% of the holding charge.

Leak Check

The deep vacuum method requires a vacuum pump capable of pulling a vacuum of 500 microns and a vacuum gauge capable of accurately measuring this vacuum depth. The deep vacuum method is the most positive way of assuring a system is free of air and liquid water. A tight dry system will hold a vacuum of 1000 microns after approximately 7 minutes (See Fig. 4).

⚠ WARNING

FIRE HAZARD

Failure to following this warning could result in personal injury, death and/or property damage.

DO NOT USE FLAMES OR IGNITION SOURCES TO LEAK CHECK.

Vacuum unit to 500 microns. When isolating the unit from the pump, the pressure shall not rise above 1500 microns in 10 minutes.

Final Tubing Check

IMPORTANT: Check to be certain factory tubing on both indoor and outdoor unit has not shifted during shipment. Ensure tubes are not rubbing against each other or any sheet metal. Pay close attention to feeder tubes, making sure wire ties on feeder tubes are secure and tight.

Step 7 – Make Electrical Connections

Be sure field wiring complies with local and national fire, safety, and electrical codes, and voltage to system is within limits shown on unit rating plate. Contact local power company for correction of improper voltage. See unit rating plate for recommended circuit protection device.

NOTE: Operation of unit on improper line voltage constitutes abuse and could affect unit reliability. See unit rating plate. Do not install unit in system where voltage may fluctuate above or below permissible limits.

NOTE: Use copper wire only between disconnect switch and unit.

NOTE: Install branch circuit disconnect of adequate size per NEC to handle unit starting current. Locate disconnect within sight from and readily accessible from unit, per Section 440-14 of NEC.

Route Ground and Power Wires

Remove access panel to gain access to unit wiring. Extend wires from disconnect through power wiring hole provided and into unit control box.

⚠ WARNING

ELECTRICAL SHOCK HAZARD

Failure to follow this warning could result in personal injury or death.

The unit cabinet must have an uninterrupted or unbroken ground to minimize personal injury if an electrical fault should occur. The ground may consist of electrical wire or metal conduit when installed in accordance with existing electrical codes.

Connect Ground and Power Wires

This appliance incorporates an earth connection for safety purposes only. Connect ground wire to ground connection in control box for safety. Connect power wiring to contactor as shown in Fig. 5.

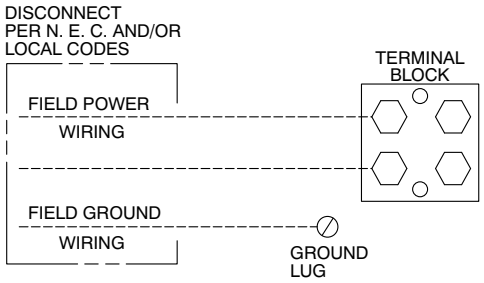

Fig. 5 – Line Power Connections

Connect Control Wiring

Route 24v control wires through control wiring grommet and connect leads to control wiring. See Thermostat Installation Instructions for wiring specific unit combinations. (See Fig. 6 and Fig. 7.)

Use No. 18 AWG color-coded, insulated (35°C minimum) wire. If thermostat is located more than 100 ft (30.5 m) from unit, as measured along the control voltage wires, use No. 16 AWG color-coded wire to avoid excessive voltage drop.

All wiring must be NEC Class 2 and must be separated from incoming power leads.

Use furnace transformer, fan coil transformer, or accessory transformer for control power, 24v/40va minimum.

NOTE: Use of available 24v accessories may exceed the minimum 40va power requirement. Determine total transformer loading and increase the transformer capacity or split the load with an accessory transformer as required.

NOTE: Factory Authorized Dissipation System must be installed with the indoor unit.

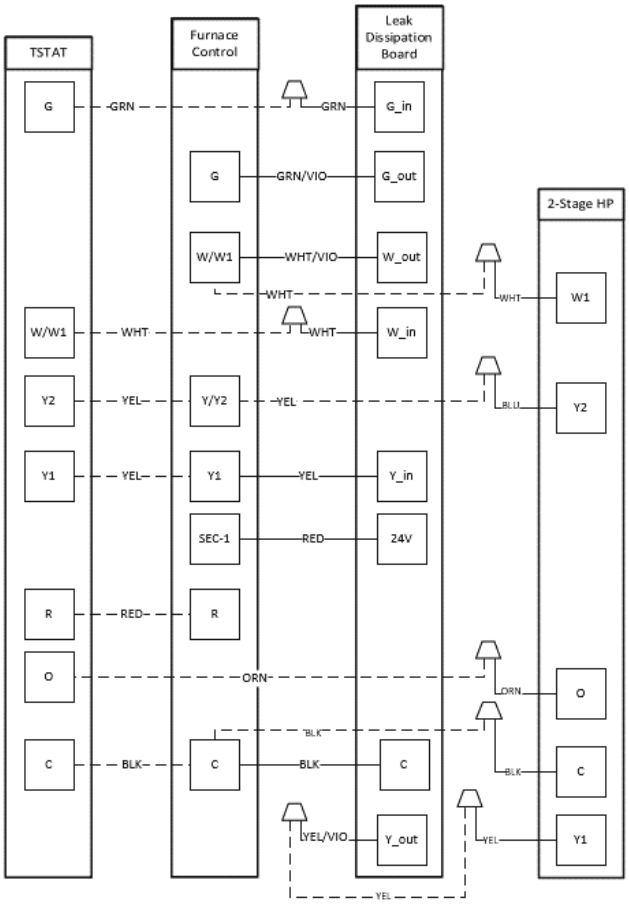

Fig. 6 – Thermidistat with Variable Speed Furnace and 2-Stage Heat Pump

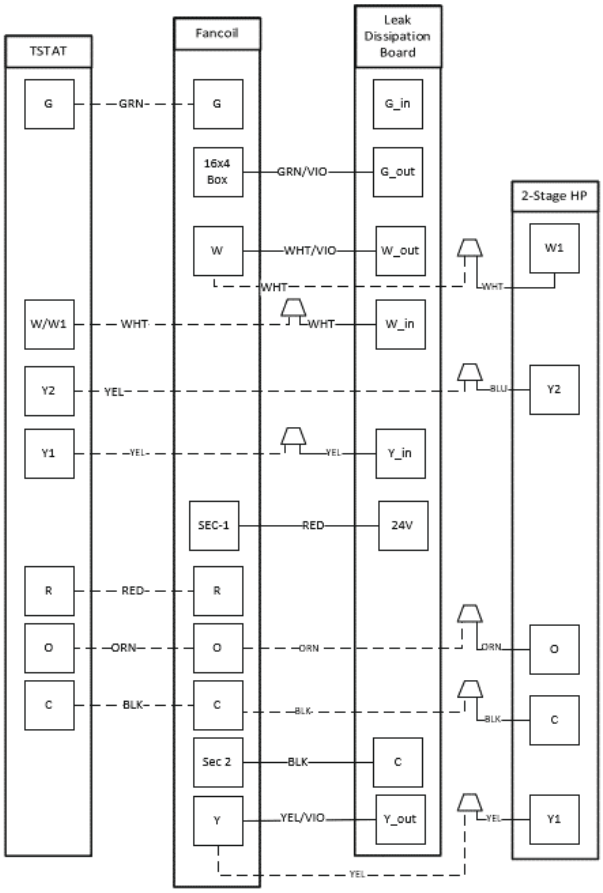

Fig. 7 – Thermidistat Wiring with Fan Coil and 2-Stage HP

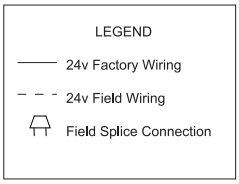

Final Wiring Check

IMPORTANT: Check factory wiring and field wire connections to ensure terminations are secured properly. Check wire routing to ensure wires are not in contact with tubing, sheet metal, etc.

Step 8 – Compressor Stator Heat

This unit has an internal stator heating function that will be energized during the off cycle. Furnish power to the unit a minimum of 24 hours before starting the unit for the first time.

The internal stator heating function is intelligently demanded by the system to prevent the compressor from being the coldest part of the system and, thus, enhancing the reliability. The stator heat will function as needed any time the outdoor unit is powered. The indoor unit and Thermostat Control do not need to be installed for the stator heat to operate properly.

Step 9 – Install Accessories

Refer to the individual instructions packaged with kits or accessories when installing.

⚠ WARNING

PERSONAL INJURY AND/OR PROPERTY DAMAGE HAZARD

Failure to follow this warning could result in personal injury and/or property damage.

For continued performance, reliability, and safety, the only approved accessories and replacement parts are those specified by the equipment manufacturer. The use of non-manufacturer approved parts and accessories could invalidate the equipment limited warranty and result in fire risk, equipment malfunction, and failure.

Please review the manufacturer's literature and replacement parts catalogs available from your equipment supplier.

Step 10 – Start-Up & Charging

⚠ CAUTION

UNIT OPERATION AND SAFETY HAZARD

Failure to follow this caution may result in minor personal injury, equipment damage or improper operation.

Observe the following:

1. Do not overcharge system with refrigerant.
2. Do not operate unit in a vacuum or at negative pressure.
3. Do not disable low pressure transducer or system safety devices such as discharge line thermistor or the high pressure switch.
4. Dome temperatures may be hot.
5. Discharge line thermistor is engaged tight on the discharge tube.

⚠ CAUTION

PERSONAL INJURY HAZARD

Failure to follow this caution may result in personal injury.

Wear safety glasses, protective clothing, and gloves when handling refrigerant and observe the following:

– Service valves are equipped with Schrader valves.

⚠ CAUTION

ENVIRONMENTAL HAZARD

Failure to follow this caution may result in environmental damage.

Federal regulations require that you do not vent refrigerant to the atmosphere. Recover during system repair or final unit disposal.

⚠ WARNING

PERSONAL INJURY HAZARD

Failure to follow this warning could result in personal injury or death.

Do not use power tools to open and close service valves.

Power tools can cause valve stem to suddenly be ejected from the valve body followed by a high pressure refrigerant leak.

Factory charge amount and desired subcooling are shown on the unit rating plate. Charging method is shown on information plate inside unit. Favorable conditions exist when the outdoor temperature is between 65°F (18°C) and 105°F (40.6°C) and the indoor temperature is between 65°F (18°C) and 80°F (26.7°C). If the temperatures are outside of these ranges, weigh in charge only. When the temperatures are in the desired range, you may return to the installation site and verify the subcooling to confirm system charge level..

Unit is factory charged for AHRI Designated Tested Combination indoor unit when connected by 15 ft. of lineset. Adjust charge by adding or removing 0.6 oz/ft (.018 kg/m) of 3/8 liquid line above or below 15ft (4.57 m) respectively.

For standard refrigerant line lengths (80 ft/24.38 m or less), allow system to operate in cooling mode at least 15 minutes. If conditions are favorable, check system charge by subcooling method. If any adjustment is necessary, adjust charge slowly and allow system to operate for 15 minutes to stabilize before declaring a properly charged system.

If the indoor temperature is above 80°F (26.67°C), and the outdoor temperature is in the favorable range, adjust system charge by weight based on line length and allow the indoor temperature to drop to 80°F (26.67°C) before attempting to check system charge by subcooling method as described above.

If the indoor temperature is below 65°F (18.3°C), or the outdoor temperature is not in the favorable range, adjust charge for line set length above or below 15ft (4.57 m) only. Charge level should then be appropriate for the system to achieve rated capacity. The charge level could then be checked at another time when the both indoor and outdoor temperatures are in a more favorable range.

NOTE: If line length is beyond 80 ft (24.38 m) or greater than 20 ft (6.10 m) vertical separation, See Long Line Guideline for special charging requirements

Airflow Selections (ECM Furnaces)

The ECM Furnaces provide blower operation to match the capacities of the compressor during high and low stage cooling operation. Tap selections on the furnace control board enable the installing technician to select the proper airflows for each stage of cooling. Refer to the literature for the furnace for further details.

Airflow Selection for Variable Speed Furnaces (non-communicating)

The variable speed furnaces provide blower operation to match the capacities of the compressor during high and low stage cooling operation. The furnace control board allows the installing technician to select the proper airflows for each stage of cooling. See furnace installation instructions for more details.

Airflow Selection for FTMA5 Fan Coils (non-communicating)

The FTMA5 provides high- and low-stage blower operation to match the capacities of the compressor at high- and low-stage.

To select recommended airflow, refer to the FTMA5 Installation Instructions. The FTMA5 utilizes a control board that allows the installing technician to select proper airflows. This fan coil has an adjustable blower-off delay factory set at 90 sec. for high- and low-stage blower operation. See fan coil installation instructions for more details.

Outdoor Unit Set-Up and Start-Up

There are 8 dip switches on the PCM control board. Refer to Table 2 for what each switch means. Configure each switch before starting the unit for the first time.

Table 2 – DIP Switch Setting Description

Dip Switch	LOW Setting	HIGH Setting
1	Refrigerant Charging Modes OFF	Refrigerant Charging Modes ON
2	Model Configuration Mode OFF	Model Configuration Mode ON
3	IDU PLC Mode Fault Display OFF	IDU PLC Mode Fault Display ON
4	TSTAT PLC Mode Fault Display OFF	TSTAT PLC Mode Fault Display ON
5	Defrost	
6		
7	Airflow Mode COMFORT	Airflow Mode EFFICIENCY
8	Status Check OFF	Status Check ON

Refrigerant Charging Modes - Switch 1

Switching the Refrigerant Charging Modes switch to HIGH will cause the 5x7 LED display to scroll the following data: CCC, HCC, EVAC, and PUMP. These correspond to the following modes - Cooling Check Charge, Heating Check Charge, Evacuation, and Pumpdown.

Switching the Refrigerant Charging Modes switch to LOW while the desired mode is scrolling will select and enter that mode of operation. If no mode is selected, the scrolling will timeout after 60 seconds. At that point the switch should be moved back to the LOW position.

To exit one of the Refrigerant Charging Modes, switch the Refrigerant Charging Modes switch from LOW to HIGH. That will put the system into normal operation. At that point the scrolling will timeout after 60 seconds and the switch should be moved back to the LOW position.

Check Charge - Cooling (CCC) / Heating (HCC)

Selecting CCC will operate the system at fixed, charge mode operating parameters. This can be used to evaluate subcooling using the sensors on the unit. The current subcooling value determined by the unit sensors will be scrolled on the 5x7 LED display.

This mode should only be selected if the indoor and outdoor units are in the acceptable temperature range for subcooling. Before adjusting charge, it is recommended to verify subcooling measurements at the liquid service valve.

IMPORTANT: This mode can only be entered if the OAT sensor is within the acceptable range of 60°F-105°F and the IAT sensor (if applicable) is within the acceptable range of 65°F-80°F. If it's outside these ranges, weigh in charge only. When the temperatures are in the desired range, you may return to the installation site and verify the subcooling to confirm system charge level.

Selecting HCC will operate the system at fixed, charge mode operating parameters design for heating. This mode can be paired with the Heating Check Chart, located on the inside of the control box cover of the ODU, to evaluate if a system is significantly over or under charged by measuring suction and discharge pressures and superheat measured at the vapor service valve. DO NOT adjust charge using the Heating Check Chart. If system is suspected to be incorrectly charged, recover refrigerant according to the Service Manual and recharge using the "full system charge/recharge" method.

IMPORTANT: This mode can only be entered if the OAT sensor is within the acceptable range of -8°F - 75°F and the IAT sensor (if applicable) is within the acceptable range of 65°F - 80°F. If it is outside these ranges, weigh in charge only. When the temperatures are in the desired range, you may return to the installation site and verify the subcooling to confirm system charge level.

Pump Down (PUMP) & Evacuation (EVAC)

Because this system has a VFD controlled compressor the conventional procedure cannot be used to "pump down" and isolate the refrigerant into the outdoor unit. The PCM control board has provisions to assist in performing this function.

1. Connect gauges to liquid and vapor or suction capillary service ports to monitor operating pressures during and at completion of the procedure.
2. Select PUMP by switching the Refrigerant Charging Modes switch to LOW.
3. Unit will begin running in cooling mode after a brief delay.
4. Close the liquid service valve.
5. The unit will run with the low pressure protection set to indicate pump down is complete when the suction pressure drops below 20 psig. Compressor protections are still active to prevent damage to the compressor or VFD (high pressure, high current, etc.).
6. Once system indicates pump down complete or failure to complete shutdown, close vapor service valve.
7. A recovery system will be required to remove final quantity of refrigerant from indoor coil and line set. Refer to the Service Manual for specific evacuation and purge steps required after recovering refrigerant and before making any repairs to the indoor unit or lineset.
8. Remove power from indoor and outdoor unit prior to servicing unit.

Evacuation and Recovery of Refrigerant (EVAC)

Because this system has an EXV for the heating expansion device, additional steps must be taken to open the EXV if the heat pump unit must be evacuated for service reasons. If the EXV is not open when pulling a vacuum or recovering refrigerant from the heat pump unit, extended evacuation time may be required and/or inadequate vacuum obtained. The PCM control board has provisions to open the EXV for refrigerant recovery and/or evacuation.

1. Connect gauges to liquid and vapor or suction capillary service ports to monitor operating pressures during and at completion of the procedure. Attach recovery system or vacuum pump to gauge set as needed for the service procedure. The service valves must be open to evacuate the unit through the line set service ports. The suction capillary service port is a direct connection to the suction port of the compressor.
2. Select EVAC by switching the Refrigerant Charging Modes switch to LOW.
3. Begin evacuation or refrigerant recovery as required for the procedure.
4. Remove power from indoor and heat pump unit prior to servicing unit. The EXV will retain the open position

Model Configuration Selection - Switch 2

This switch is only needed if the VFD is being installed as replacement component. Follow the instructions provided with the replacement VFD at the time of install.

PLC Mode Fault Displays - Switches 3 and 4

For traditional setups not utilizing Power Line Communication (PLC) communication and/or control, the default position (LOW) is to not display PLC communication faults on the OD equipment.

For systems installed with a PLC capable indoor unit, changing Switch 3 to HIGH will allow the outdoor unit to display any communication faults between the outdoor and indoor units.

For systems installed with a PLC capable thermostat, changing Switch 4 to HIGH will allow the outdoor unit to display any communication faults between the outdoor unit and the thermostat.

If a PLC communication fault occurs, the system will default to the non-communicating wiring configuration.

Defrost Switches 5 and 6

The PCM control board offers 4 possible defrost interval times: 30, 60, 90 minutes or AUTO. The default is AUTO.

Defrost interval times: 30, 60, 90 minutes or AUTO are selected by the setting DIP switches 5 and 6 to the positions shown in Fig. 8.

Auto mode will adjust the defrost interval dynamically based on real-time frost accumulation and provide optimum system performance. In Auto mode, defrost will begin when frost is detected on the coil. In non-frosting conditions, it is possible to the unit to run for several days without initiating defrost.

The defrost process begins when the defrost interval time is reached under frost-accumulating conditions. The defrost process ends when the coil has sufficiently thawed and been allowed time to drain. Defrost may also terminate as a result of a time limit - usually 15 minutes. If Defrost is forced via the Forced Defrost input, defrost will be initiated regardless of frost accumulation time or outdoor temperature. A forced defrost will run at least 30 seconds, but may not run longer than 30 seconds if ambient temperature is well above freezing.

NOTE: Compressor speed during defrost varies based on outdoor conditions and unit model

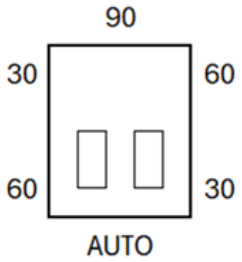

Fig. 8 – Defrost Interval

System Control Mode - Switch 7

The default system mode from the factory is set to Comfort Mode (switch = LOW). Comfort Mode is the mode used for published AHRI ratings. Changing the switch to HIGH will change the control mode to Efficiency Mode, which widens the compressor range and potentially leads to less energy usage. However, Efficiency Mode will lead to less moisture removal than Comfort Mode and may not be suitable for all situations.

Status Check - Switch 8

Switching the Status Check switch to HIGH will cause the 5x7 LED display to scroll the following data: PCM firmware version, VFD firmware version, and model configuration.

This switch should be moved back to the LOW position once Status Check is complete.

Follow these steps to properly start up the system

1. After system is evacuated, fully open liquid and vapor service valves.
2. Unit is shipped with valve stem(s) front seated (closed) and caps installed. Replace stem caps after system is opened to refrigerant flow (back seated). Replace caps finger-tight and tighten with wrench an additional 1/12 turn.
3. Close electrical disconnects to energize system.
4. Set room thermostat at desired temperature. Be sure set point is below indoor ambient temperature for cooling mode operation.
5. Set room thermostat to COOL and fan control to ON or AUTO mode, as desired and use DIP Switch 1 to put the system in Check Charge Cooling (CCC) mode.
6. Operate unit for 15 minutes. Check system refrigerant charge.

Manufacturer reserves the right to change, at any time, specifications and designs without notice and without obligations.

Table 3 – Required Liquid Line Temperature for R-454B

Liquid (PSIG) Pressure at Service Valve	R-454B Subcooling Temperature (F)					
	6	8	10	12	14	16
238	78	76	74	72	70	68
245	80	78	76	74	72	70
252	82	80	78	76	74	72
260	84	82	80	78	76	74
268	86	84	82	80	78	76
276	88	86	84	82	80	78
284	90	88	86	84	82	80
292	92	90	88	86	84	82
301	94	92	90	88	86	84
309	96	94	92	90	88	86
318	98	96	94	92	90	88
327	100	98	96	94	92	90
336	102	100	98	96	94	92
346	104	102	100	98	96	94
355	106	104	102	100	98	96
365	108	106	104	102	100	98
375	110	108	106	104	102	100
385	112	110	108	106	104	102
396	114	112	110	108	106	104
406	116	114	112	110	108	106
417	118	116	114	112	110	108
428	120	118	116	114	112	110
439	122	120	118	116	114	112
450	124	122	120	118	116	114

Post Charging

Final charge should be recorded on the outdoor unit charging label with permanent and legible writing. Total refrigerant charge is factory charge plus any added charge. Verify the indoor space served by the indoor unit, including spaces connected by ductwork, exceeds the minimum room size as listed on the outdoor unit charging label. Refer to Table 4

Table 4 – Minimum Room Area Charging Table

Total System Charge (lbs.)	Minimum Floor Area ft.^{2} (m^2)
4	61 (5.7)
5	76 (7.0)
6	91 (8.5)
7	106 (9.8)
8	122 (11.3)
9	137 (12.7)
10	152 (14.1)
11	167 (15.5)
12	182 (16.9)
13	198 (18.4)
14	213 (19.8)
15	228 (21.2)
16	243 (22.6)
17	258 (24.0)
18	274 (25.5)
19	289 (26.8)
20	304 (28.2)
21	319 (29.6)
22	335 (31.1)
23	350 (32.5)
24	365 (33.9)
25	380 (35.3)

Step 11 – Sequence of Operation

NOTE: The VFD and PCM are equipped with a 5-minute lockout timer that is initiated upon any interruption of power.

Turn on power to indoor and outdoor units. Transformer is energized.

These models utilize a 2-stage indoor thermostat. Upon power-up, with a call for low (Y1) stage cooling or heating, the outdoor fan and compressor are energized at their lowest speeds. If low-speed cannot satisfy cooling or heating demand, high-speed is energized by the high (Y2) stage of the indoor thermostat, which will increase the outdoor fan and compressor speeds. After the high stage is satisfied, the unit returns to low-speed operation until high stage is required again. When low stage cooling or heating (Y1) is satisfied, the compressor will shut off.

Because the outdoor unit is variable speed and controlled by the PCM, certain operations are different than traditional single or two-stage systems. With a call for cooling or heating, the outdoor fan is first energized, followed shortly by the compressor, where they will both operate at a start speed for a brief period. Once certain start criteria are met, the compressor and fan will ramp to the target demand speeds. If continued operation at the initial speed does not satisfy demand (Y1), the system will increase compressor speed until it satisfies the demand. After the higher demand (Y2) is met, the system will adjust back down to a lower demand (Y1). Ideal performance is achieved when system operates continuously at the lowest speed possible, minimizing variation in conditioned space temperatures while using minimal power.

As the unit operates at lower capacity, system vapor (suction) pressure will be higher than it is during a standard single-stage system operation or during a higher capacity operation.

When all demand is satisfied (Y1 and Y2), the compressor will shut off.

NOTE: Because of how building load is matched with Y1 and Y2 control, when switching from Y1 to Y2 the unit may not immediately go to the highest compressor speed allowed. The compressor may continue to increase it's speed over time to match building load.

Cooling

With low-speed cooling, Y1 and O are powered on; with high-speed cooling, Y2, Y1, and O are powered on. The O energizes the reversing valve, switching it to cooling position. The Y1 and Y2 signals indicate to the PCM the desire for higher or lower cooling capacity.

If all safeties are in a safe state and cycle timers have expired, the PCM then decides which outdoor fan and compressor speeds are appropriate based on OAT and other factors.

When the cooling call has been satisfied, Y1 and Y2 are turned off, indicating to the PCM to shut down the outdoor fan and compressor. The 5-minute time guard begins counting. Compressor will not come on until this delay expires. In the event of a power interruption, the time guard will not allow another cycle for 5 minutes.

Heating

With low-speed heating, Y1 is powered on; with high-speed heating, Y2 and Y1 are powered on. The Y1 and Y2 signals indicate to the PCM the desire for higher or lower heating capacity.

If all safeties are in a safe state and cycle timers have expired, the PCM then decides which outdoor fan and compressor speeds are appropriate based on OAT and other factors. When the heating call has been satisfied, Y1 and Y2 are turned off, indicating to the PCM to shut down the outdoor fan and compressor. The 5-minute time guard begins counting. Compressor will not come on until this delay expires. In the event of a power interruption, the time guard will not allow another cycle for 5 minutes.

Manufacturer reserves the right to change, at any time, specifications and designs without notice and without obligations.

Step 12 – Major Components

Primary Control Module

The Primary Control Module (PCM) is physically connected to the Variable Frequency Drive (VFD). The PCM controls the various functions of the outdoor unit, and has the following outputs:

1. Main EXV (EXV-H)
2. Reversing Valve (RVS)
3. Liquid Line Solenoid (LLS)
4. O signal
5. W signal

The PCM has the following inputs:

1. Outdoor Discharge line Temperature (ODT) Thermistor
2. Outdoor Air Temperature (OAT) Thermistor
3. Outdoor Coil Temperature (OCT) Thermistor
4. Outdoor Suction Temperature (OST) Thermistor
5. Liquid Line Temperature (LLT) Thermistor
6. Discharge & suction pressure transducers (DPT & SPT). Labeled as P1 & P2 on the PCM
7. CCN communication (service only, not for system control)
8. 24VAC input power

The PCM receives a cooling or heating demand from the two-stage thermostat and determines the appropriate compressor, fan and reversing valve action based upon the various sensor inputs.

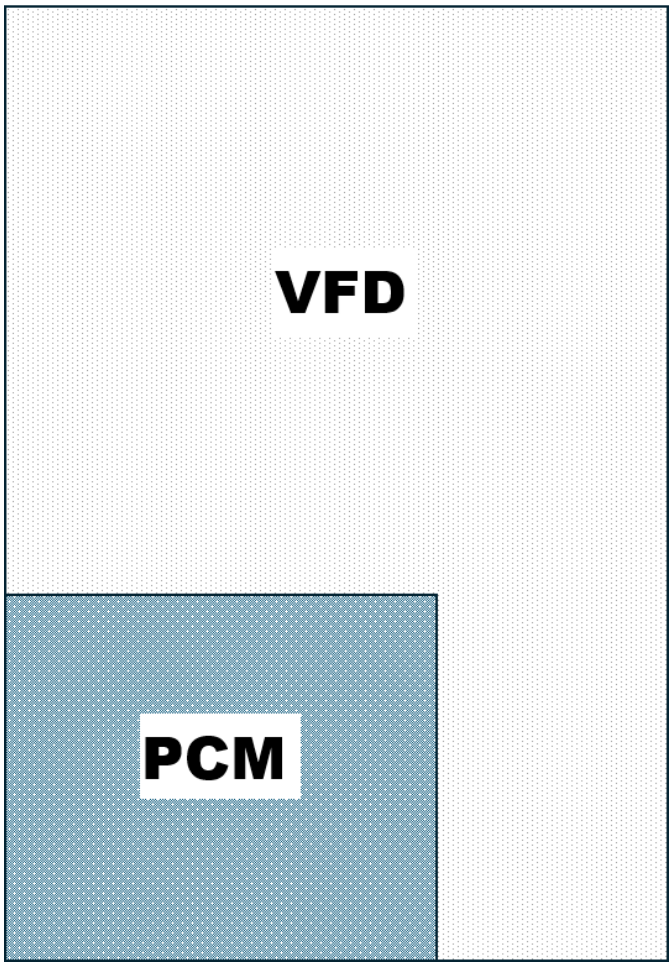

Fig. 9 – VFD-PCM High Level

Green Communications (COMM) Light

A green LED (COMM light) on the outdoor board (see Fig. 10) indicates successful communication with the VFD. A flashing green LED indicates active communication with the VFD. A flashing red LED indicates failed communication with the VFD. If the LED is off, it indicates that there is no communication with the VFD, which only happens in the even of multiple failed communications. A fault code will be set.

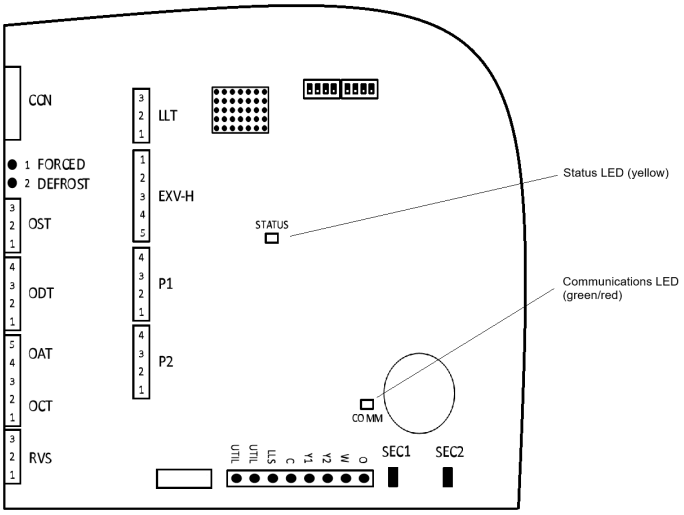

Fig. 10 – Successful Communication with VFD

Amber Status Light

The operation modes and meaning for each mode of the status light is described in the table below for PCM SW versions 1.0 and above.

Mode	Meaning
Off	Power is removed from the PCM or there is a fundamental PCM fault.
On	Equipment is in standby with no diagnostic conditions preventing or limiting operation.
1 Slow Flash	Equipment is operating at low capacity
2 Slow Flashes	Equipment is operating at high capacity
Continuous Slow Flash	Equipment operation has been interrupted or is being limited.
Continuous Fast Flash	Equipment is in a lockout condition as a result of a diagnostic condition or is in Diagnostic Code Recall mode.

5x7 LED Matrix

The Primary Control Module (PCM) is equipped with a 5x7 LED matrix. This matrix will display the 4 highest priority diagnostic codes in a scrolling fashion with 2 seconds in between each code. At the end of the 4th highest priority diagnostic code there is a 5 second pause before the list repeats.

Variable Frequency Drive (VFD)

The VFD or variable frequency drive is integrated with the PCM in the control box. It's an air-cooled device that communicates with the PCM and drives the compressor to the demanded RPM. The VFD provides DC voltage to the fan motor and sends a fan RPM signal to the electronics on the fan motor. The VFD changes single phase line voltage to a 3-phase output that varies in both voltage and frequency to drive the compressor.

The VFD is equipped with an LED that indicates powered up status. When the VFD has power, this LED is solid green. When the VFD capacitors have discharged, the LED will turn off. See Fig. 11 for the approximate location.

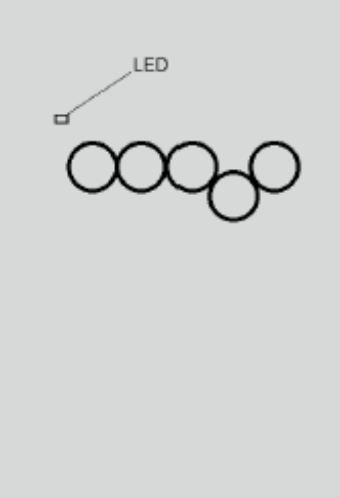

Fig. 11 – VFD LED Location

⚠ WARNING

ELECTRICAL HAZARD - HIGH VOLTAGE

Failure to follow this warning could result in personal injury or death.

Electrical components may hold charge. **DO NOT** remove control box cover for 2 minutes after power has been removed from unit.

PRIOR TO TOUCHING COMPONENTS:

Verify zero (0) voltage at VFD connections shown on control box cover.

Variable Speed Compressor

This unit contains a high-side variable speed compressor that has a wide operating range. These models contain variable speed rotary compressors. All of the variable speed compressors operate on 3PH AC provided by the VFD. This compressor can only be operated by the specific VFD supplied with the unit.

⚠ CAUTION

EQUIPMENT DAMAGE HAZARD

Failure to follow this caution may result in equipment damage.

Do not attempt to apply line voltage directly to the compressor. This will destroy the compressor

Time Delays

The unit time delays include:

- Five minute time delay to start cooling or heating operation when there is a call from the two-stage thermostat. To bypass this feature, momentarily short and release Forced Defrost pins.
- Five minute compressor re-cycle delay on return from a brown-out condition.

Heating Electronic Expansion Valve (EXV-H)

This unit uses an electronic expansion valve for refrigerant metering in the heating mode. The control board drives the EXV to its proper position based on the operating mode and conditions.

Variable Speed Fan Motor

The fan motor included in this unit is a Brushless DC motor with an integrated control module. The control module is supplied DC voltage from the VFD. The speed command is provided from the VFD through a 0-5V signal. The commanded speed is determined by the PCM and is communicated through Modbus to the VFD. The motor cannot be connected to line voltage. Fan motor speed varies based on outdoor ambient temperature, compressor, speed, and system demand. The fan motor will not operate during defrost and may cycle off and on if extremely low airflow is requested by the outdoor unit controls.

High Pressure Switch

This unit contains a high pressure switch to protect against high pressure conditions. This switch must be closed for the VFD to be powered.

Outdoor Pressure Transducers

There are two pressure transducers installed on this unit. The pressure transducers are connected to the P1 and P2 inputs on the PCM. Each transducer may be connected to either PCM input. These transducers have a range from 0 to 620 psig and are used for system protection, control, and diagnostics.

Stator Heater Operation

This unit has an internal stator heating function. The compressor windings will occasionally be energized during the OFF cycle to start the stator heat operation, thus maintaining a sump temperature that is essential for compressor reliability. The compressor will not run during this process.

Troubleshooting

Model Plug

The system PCM has been pre-programmed with an electronic model plug that establishes the model configuration, i.e. size and type, of the unit. This electronic model plug removes the need for a physical model plug to be installed into the PCM. The model configuration can be set using the PCM dip switches. The correct model configuration must be set for the system to operate properly. (see Table 5). Refer to the Service Manual for more information on model configurations.

Table 5 – Model Plug Information

MODEL NUMBER	MODEL PLUG NUMBER	PIN RESISTANCE (K-ohms)		PCM Model
		Pins 1-4	Pins 2-3	HP
N5H9V024	HK70EZ003	5.1K	24K	24K-HP
N5H9V036	HK70EZ015	5.1K	360K	36K-HP
N5H9V048	HK70EZ027	11K	150K	48K-HP
N5H9V060	HK70EZ039	18K	62K	60K-HP

⚠ CAUTION

EQUIPMENT DAMAGE HAZARD

Failure to follow this caution may result in equipment damage and/or improper operation.

Do not attempt to install an incorrect model plug as this could cause some units to operate incorrectly and fail prematurely.

Pressure Switch Protection

The outdoor unit is equipped with high pressure switch. If this switch opens the VFD will lose line power and the compressor and fan motor will not operate. The high pressure switch opens at 670 +/- 10 psig and closes at 470 +/- 25 psig. If this occurs the PCM will set a diagnostic code per Table 9. The outdoor pressure transducer installed at the discharge of the compressor is monitored by the PCM and the PCM will take action to avoid the high pressure switch from opening.

Compressor Protection

The Primary Control Module continuously monitors the operation of the compressor and takes action when it is nearing the edge of the boundaries of reliable operation. The PCM utilizes the pressure transducers to maximize the reliability and minimize the off time of the system due to operation outside of the compressor boundaries. The PCM takes different actions for each edge of the boundary, but each culminates in a reduction of compressor speed to the minimum allowable and, in the worst case, will power off the compressor to avoid excursions outside the boundaries. If a shutdown does occur then the PCM will set a diagnostic code per Table 9.

Line Voltage Diagnostics

The primary control module monitors the line voltage for low and high voltage events. If a low voltage or high voltage event occurs and another fault occurs simultaneously the PCM will set a fault that indicates this was due to the system conditions and not the components. If this occurs several times in a row the PCM will set a malfunction and lock out operation for 1-4 hours, depending on the condition. Refer to Table 9 for the list of fault codes and Table 10 for the list of malfunctions and the lockout times for each one.

Forced Defrost Pins

The forced defrost pins have several functions. When shorting the pins using a clip wire the below functions can be executed:

If the pins are shorted for more than 5 seconds and the unit is in heating mode, the unit will enter into a defrost.

If the pins are shorted more than 1 second and less than 5 seconds when the system has just turned off and an active call for cooling or heating is present, the 5 minute initial on-time will be defeated.

If the unit is in the OFF mode and the pins are shorted at power on the unit will enter into Status Code Recall Mode.

Temperature Thermistors

Thermistors are used to sense the outdoor ambient (OAT), outdoor coil (OCT), liquid line (LLT), any outdoor discharge (ODT) line temperatures. All thermistors are 10K thermistors except for the ODT, which is a 50k thermistor.

Refer to Table 6 and Table 7 for resistance values versus temperature for the OAT, OCT - HP, ODT, and LLT - HP.

Table 6 – 10K Thermistor Resistance Values

TEMPERATURE	RESISTANCE (K OHMS)
25.0°C (77.0°F)	10.0 + / - 2.3%
0.0°C (32.0°F)	32.6 + / - 3.2%
-17.8°C (0 °F)	85.5 + / - 3.4%

Table 7 – 50K Thermistor Resistance Values

TEMPERATURE (°C)	RESISTANCE (K OHMS)
25	50.15 + / - 5.0%
75	7.565 + / - 3.0%
125	1.7 + / - 1.4%

If the outdoor air or coil thermistor should fail, the control will flash the appropriate fault code (see Table 9.)

IMPORTANT: The OAT, OCT/LLT, OST, and ODT thermistors should be factory mounted in the final locations. Check to ensure thermistors are mounted properly (See Fig. 12, Fig. 13 and Fig. 14).

Outdoor Air Temperature (OAT)

The OAT is a 10K thermistor used for multiple system operations. It provides the outdoor air temperature to the primary control module. It is essential for controlling the system and is used in almost all modes of operation. The sensor is mounted in the control box per Fig. 12. See Table 6 for proper resistances.

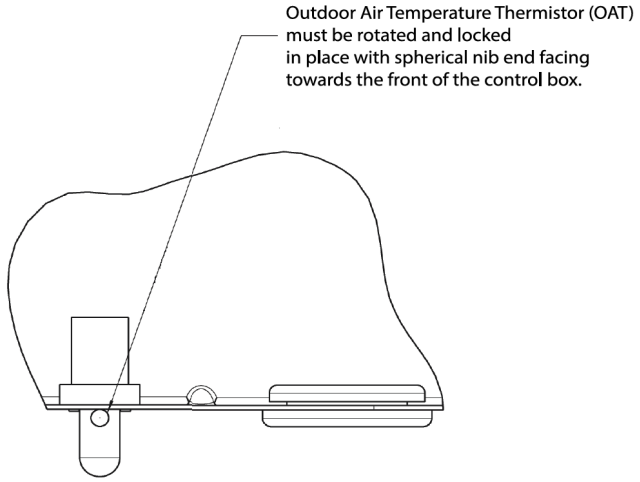

Fig. 12 – OAT Thermistor Mounting Location

⚠ WARNING

PERSONAL INJURY AND/OR PROPERTY DAMAGE HAZARD

Failure to follow this warning could result in personal injury and/or property damage.

The appliance shall be stored in a room without continuously operating ignition sources (for example:

open flames, an operating gas appliance or an operating electric heater.

Do not pierce or burn.

Be aware that refrigerants do not contain an odor.

Outdoor Coil Temperature (OCT)

The OCT Thermistor is a 10K thermistor used for multiple system operations. This sensor is connected to the PCM through a shared 5-pin connector with OAT and provides the coil temperature to the primary control module. It is used for low ambient operation, defrost control, and other system operations. The sensor must be securely mounted to the stub tube on the outdoor coil. Note that there is only one stub tube used and on most units it is the bottom circuit. See Fig. 13 for proper placement. See Table 6 for proper resistances.

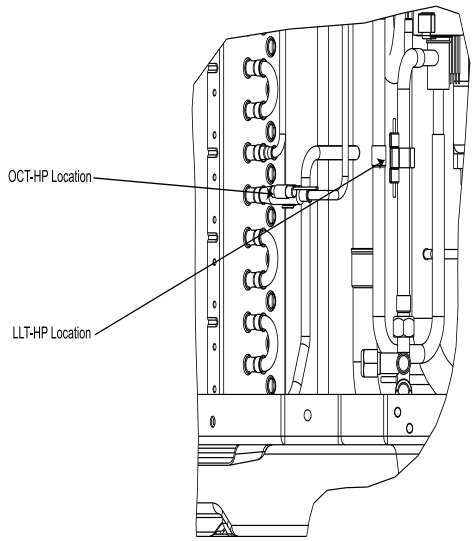

Fig. 13 – OCT and LLT Thermistor Mounting Locations

Liquid Line Temperature (LLT)

The LLT is a 10K thermistor used for multiple system operations. LLT is connected to the PCM through a separate 3-pin connector. It is used for subcooling calculation during charging. The sensor must be securely mounted to the liquid tube in between the liquid service valve and the EXV. See Table 6 for proper resistances.

Outdoor Suction Temperature (OST)

The OST is a 10K thermistor used for assisting in EXV control and must be secured on the suction tube and aligned longitudinally to the vertical surface of the tube axis (see Fig. 14). See Table 6 for proper resistances.

Outdoor Discharge Line Temperature (ODT)

The ODT is a 50k thermistor used for determining discharge superheat and protecting the compressor from over-temperature operation. Proper mounting is required to reduce the influence of ambient temperature and provide accurate tube temperature. ODT is located on the compressor discharge stub-out (see Fig. 14) and should be inside the compressor sound blanket.. See Table 7 for proper resistances.

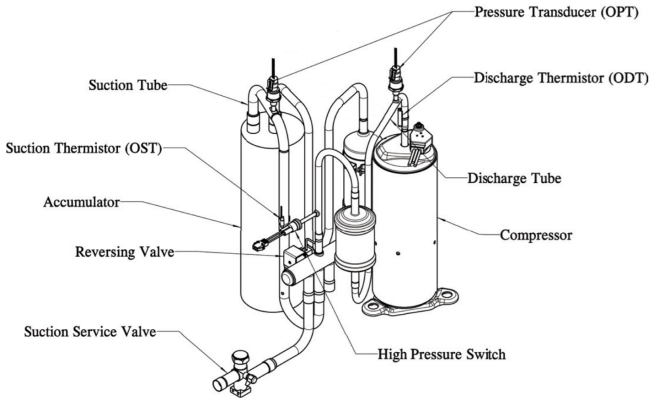

Fig. 14 – OST Thermistor and ODT Thermistor Mounting Locations

⚠ CAUTION

EQUIPMENT DAMAGE HAZARD

Failure to follow this caution may result in equipment damage and/or improper operation.

In order to minimize the ambient influence, make sure the thermistor curved surface hugs the pipe surface and is secured tight using the wire tie fished through the original slot, insulating polymer body.

Failed Thermistor Default Operation

Factory defaults have been provided in the event of failure of any of the thermistors.

If the OAT sensor fails, the outdoor unit will operate at a fixed speed. The value of OST will be substituted for OAT when running in heating, and the value of OCT will be reported when not running or running in cooling.

If the OCT sensor fails. defrost will occur at a 60 minute time interval and run for 10 minutes during heating operation. Saturated suction temperature will be substituted for OCT during heating operation, and discharge temperature will be substituted during cooling operation.

If the ODT sensor fails, the outdoor unit will operate at a fixed speed and a value of 47°F will be substituted.

If the OST sensor fails, the outdoor unit will not operate in heating, but will continue to operate in cooling. A value of 47°F will be substituted.

If the LLT sensor fails, subcooling calculation during charging mode will not be available.

Variable Speed Compressor Winding Resistance

This compressor operates with 3-phase variable frequency PWM variable voltage. For troubleshooting certain fault codes related to compressor resistances, follow these steps:

1. Disconnect compressor power leads from the VFD terminals, U (YEL), V (RED), and W (BLK).
2. Measure the resistance between YEL to RED, YEL to BLK, and RED to BLK and compare to Table 8 values. Each resistance set should be equal.
3. Measure the resistance to ground for each lead.
4. If the resistances are correct then reconnect power leads to appropriate terminal.
5. If the resistances appear to be abnormal, it will be necessary to measure the resistance at the compressor fusite terminals.
6. Remove the sound blanket and harness plug, measure the resistances, and compare to Table 8.
7. Reinstall compressor sound blanket making sure discharge line thermistor and compressor power harness are routed as they were from the factory.

Table 8 – Variable Speed Compressor Resistances winding resistance at 68°F (20°C)

WINDING	24	36	48	60
Between terminals T1, T2, and T3	0.61	0.61	0.18	0.18
Between terminal & ground	>1 mega OHM			

⚠ CAUTION

EQUIPMENT DAMAGE HAZARD

Failure to follow this caution may result in equipment damage and/or improper operation.
Do not use Meggar for measuring the winding resistance.

Fan Motor

The fan motor requires 5 wires connected to VFD for operation. These wires are: DC BUS, GND, +15V DC, VSP, FG. Note high voltage present on ALL wires because they are not earth or chassis ground referenced. Do not attempt to measure voltages while running. Fan speed is monitored by VFD and PCM continuously. If fan faults occur verify the fan blade rotates freely without obstruction. Ensure all electrical connections are secure and wires are undamaged.

Status Codes

Table 9 shows the status codes Most system problems can be diagnosed by reading the codes from the 5x7 LED display on the PCM

Status Code Recall Mode

Active status codes are stored in memory even when power is absent. The most recent flashing status code (highest priority active) can be recalled from memory via Status Code Recall Mode is accessed by shorting (use a clip wire) the “force defrost” connector (labeled J2 on the board, and then power ON the unit.

Please make sure the unit is turned OFF before shorting the pins. Status Code Recall Mode will continue as long as the “force defrost” terminals remain shorted. The unit will not attempt to heat or cool while the terminals remain shorted. Once the status code is read, power-down the unit and remove the short.

Table 9 – Diagnostic Code Table

SERVICE

Base	Expansion Fault*	Expansion Malfunction**	DESCRIPTION
14	94		Line Voltage Low
15	94		Line Voltage High
18	11		Indoor Coil Freeze Protection
19	06		Lost PLC Communications with TSTAT
	07		Thermostat Authentication Fault
21	06		Lost PLC Communications with IDU
	07		Indoor Authentication Fault
24		58	5V PCM External Power Out of Range
25		62	PCM Model Configuration Missing
		63	VFD/PCM Model Mismatch
26	27		PCM Reprogramming Failure
	31		PCM EEPROM Write Failure
28		71	Fuse 1 Open (RVS)
		72	Fuse 2 Open (LLS)
		73	VFD 15V Shorted to Ground
31	11	58	Compressor High Pressure Limit
	16	56	High Pressure Switch Trip
	19		High Pressure Disable
32	15	55	Compressor Low Pressure Limit
		59	Low Pressure Disable
33	15	55	Compressor Low Discharge Limit
34	11	58	Compressor High Temperature Limit
35	11	58	Compressor High Compression Limit
36	15	55	Compressor Low Compression Limit
37	41		Cold Compressor Sump Lockout
38	13	53	Compressor Starting Error
		54	Compressor No Pump
		55	Compressor Physical Malfunction
	14		Compressor Disconnect
	18		High Differential Pressure Start Disable
	31	71	Sensorless Control Stall
39	13	53	Fan Start Error
	14		Fan Speed Error
	15		Unexpected Fan Shutdown
41	13		Defrost Overrun
44	14		Pressure Equalization Timeout
45	14		General Power Curtailment Event
	15		Critical Power Curtailment Event
	16		Off Mode Power Curtailment Event
51	01		OAT (Outdoor Air Temp) Sensor Open
	02		OAT (Outdoor Air Temp) Sensor Shorted
		43	OAT Not Valid
52	01		OCT-HP (Outdoor Coil Temp(HP)) Sensor Open
	02		OCT-HP (Outdoor Coil Temp(HP)) Sensor Shorted
	03		LLT-AC Sensor Open
	04		LLT-AC Sensor Shorted
53	01	41	OST (Outdoor Suction Temp) Sensor Open
	02	42	OST (Outdoor Suction Temp) Sensor Shorted/High Temp
54	01		ODT (Outdoor Discharge Temp) Sensor Open/Low Temp
	02		ODT (Outdoor Discharge Temp) Sensor Shorted/High Temp
55	01		LLT-HP (Liquid Line Temp) Sensor Open/Low Temp (HP Only)
	02		LLT-HP (Liquid Line Temp) Sensor Shorted/High Temp (HP Only)
57	01	41	P1 Open
	02	42	P1 Shorted
58	01	41	P2 Open
	02	42	P2 Shorted
61		41	Reversing Valve Solenoid Open
	13	53	Reversing Valve Timeout
	55	95	Reversing Valve Solenoid Position Incorrect
64		41	EXV-H Phase Open (HP Only)
		44	EXV-H Power Short to Ground (HP Only)
		45	EXV-H Phase Short to Ground (HP Only)
79	01		USB Drive Fault
	02		USB File Not Found
	03		USB Invalid SW Update Version
81	13	53	PFC Error
	14	54	Unbalanced PFCM Error
	15	55	VFD Current Detection Value
	31		Stator Heat Incorrect
82	11		VFD Input Power Limit Active
	12		VFD System Line Voltage Limit Active
	16	56	Low Voltage Shutdown
	17	57	Line Over Voltage
	18	58	IGBT Short Detection
83	11		VFD Compressor Current Limit Active
	12		VFD Line Peak Current Limit Active
	13		VFD Input Current Limit Active
	15	55	Running Motor Over Current
	57		VFD Compressor Underspeed Fault
84	11	55	IPM Over Temperature
85	13	53	DC Under Voltage Shutdown
	14	54	DC Over Voltage Shutdown
86	06	46	VFD Communication Error
87	13	53	VFD Initialization Error
88	27		VFD Reprogramming Failure
	32	72	VFD Internal Error - IPM Temp Sensor
	41	81	MOSFET Open
89	67		VFD Software Version Error
	68		VFD Model Error
91	6	46	Incorrect Compressor Speed Reported

*Fault indicates a condition that interrupts or limits but does not prevent equipment operation. Faults may be temporary/intermittent or permanent.

**Malfunctions indicate a serious condition that significantly limits or prevents system operation. Malfunctions may be an escalation of a repetitive fault condition.

352505-101 REV. A

Table 10 – Malfunction Lockout Duration

Code	Title	Time
24-58	5V PCM External Power Out of Range	Duration of Event
25-62	Model Plug Missing Malfunction	Permanent*
25-63	VFD Model Mismatch	Permanent*
28-71	Fuse 1 Open Malfunction	Permanent*
28-72	Fuse 2 Open Malfunction	Permanent*
28-73	VFD 15V Shorted to Ground	4 hours
31-56	High Pressure Switch Activated Malfunction	2 hours
31-58	Compressor High Pressure Limit Malfunction	2 hours
32-55	Compressor Low Pressure Limit Lockout	2 hours
32-59	Low Pressure Disable	Permanent*
33-55	Compressor Low Discharge Limit Lockout	2 hours
34-58	Compressor High Temperature Limit Malfunction	2 hours
35-58	Compressor High Compression Limit Malfunction	2 hours
36-55	Compressor Low Compression Limit Lockout	2 hours
38-53	Compressor Starting Malfunction	4 Hours
38-54	Compressor No Pump	30 minutes
38-55	Compressor Physical Malfunction	4 Hours
38-71	Sensor-less Control Stall Malfunction	2 Hours
39-53	Fan Start Malfunction	1 Hour
51-43	OAT Faulted with No Valid Substitution	Permanent*
53-41	OST Open / Low Temp Malfunction (HP)	Duration of Event
53-42	OST Shorted / High Temp Malfunction (HP)	Duration of Event
57-41	P1 Open Malfunction	Duration of Event
57-42	P1 Shorted Malfunction	Duration of Event
58-41	P2 Open Malfunction	Duration of Event
58-42	P2 Shorted Malfunction	Duration of Event
61-41	Reversing Valve Solenoid Open	Duration of Event
61-53	Reversing Valve Timeout Malfunction	2 hours
64-41	EXV-H Phase Open	Duration of Event
81-53	PFC Phase Current Detection Offset Malfunction	2 Hours
81-54	PFC Phase Over Current Malfunction	2 Hours
81-55	VFD Current Detection Value Malfunction	2 hours
82-56	Low Voltage Shutdown Malfunction	2 hours
82-57	Line Over Voltage Malfunction	2 Hours
82-58	IGBT Short Detection Malfunction	2 Hours
83-55	Running Motor Over Current Malfunction	2 Hours
84-51	IPM Overtemp Malfunction	2 hours
85-53	DC Link Under Voltage Malfunction	2 hours
86-46	VFD Communication Malfunction	1 hour
87-53	VFD System Lockout - Initialization	4 Hours
88-72	IPM Temp Sensor Malfunction	2 hours
88-81	MOSFET Open Malfunction	1 hour
91-46	Reported Compressor Speed Malfunction	1 hour
* unlikely to clear on its own; see Service Manual for troubleshooting steps		

FINAL CHECKS

IMPORTANT: Before leaving job, be sure to do the following:

1. Ensure that all wiring is routed away from tubing and sheet metal edges to prevent rub-through or wire pinching.
2. Ensure all thermistors are making good contact with the tubes they are mounted to.
3. Record final charge on the outdoor unit charging label with permanent and legible writing.
4. Ensure that all wiring and tubing is secure in unit before adding panels and covers. Securely fasten all panels and covers.
5. Tighten service valve stem caps to 1/12-turn past finger tight.
6. Re-install red service port caps.
7. Leave Users Manual with owner. Explain system operation and periodic maintenance requirements outlined in manual.
8. Fill out Dealer Installation Checklist and place in customer file.

REPAIRING REFRIGERANT CIRCUIT

When breaking into the refrigerant circuit to make repairs, or for any other purpose, the following procedures shall be used.

1. Safely remove the refrigerant using a recovery pump certified for flammable refrigerants.
2. Purge the refrigerant circuit with an inert gas.
3. Evacuate the refrigerant circuit to 1500 microns.
4. Break vacuum with an inert gas purge of the refrigerant circuit ensuring that the outlet of the vacuum pump is not near a potential ignition source.
5. Open the circuit by cutting or brazing.

CARE AND MAINTENANCE

For continuing high performance and to minimize possible equipment failure, periodic maintenance must be performed on this equipment.

Frequency of maintenance may vary depending upon geographic areas, such as coastal applications. See Owner's Manual for information.

Manufacturer reserves the right to change, at any time, specifications and designs without notice and without obligations.

R-454B Refrigerant — Quick Reference Guide

- Be sure that servicing equipment and replacement components are designed to operate with R-454B refrigerant.
- Recovery cylinder service pressure rating must be 400 psig, DOT 4BA400 or DOT 4BW400.
- R-454B refrigerant systems should be charged with liquid refrigerant. Use a commercial type metering device in the manifold hose when charging into suction line with compressor operating.
- Leak detectors should be designed to detect R-454B refrigerant.
- R-454B refrigerant is compatible with POE and PVE oils only.
- Vacuum pumps will not remove moisture from oil.
- Do not use liquid-line filter driers with rated working pressures less than 600 psig.
- Do not leave R-454B suction line filter driers in line longer than 72 hours.
- Do not install a suction-line filter drier in liquid line.
- POE and PVE oils absorb moisture rapidly. Do not expose oil to atmosphere.
- POE and PVE oils may cause damage to certain plastics and roofing materials.
- Wrap all filter driers and service valves with wet cloth when brazing.
- A factory approved liquid-line filter drier is required on every unit.
- Do NOT use R-410A TXV. TXVs are not cross compatible between R-410A and R-454B.
- Do NOT convert a coil with a piston or R-410A metering device. Coils must come from the factory with an R-454B TXV and an A2L dissipation board already installed.
- Never open system to atmosphere while it is under a vacuum.
- When system must be opened for service, recover refrigerant, evacuate then break vacuum with dry an inert gas and replace filter driers. Evacuate to 500 microns prior to recharging.
- Do not vent R-454B refrigerant into the atmosphere.
- Do not use capillary tube coils.
- Observe all **warnings**, **cautions**, and **bold** text.
- All indoor coils must be installed with a hard shutoff R-454B TXV metering device in long line applications.

©2025 Carrier Corp. All rights reserved.
Edition Date: 11/25
Catalog No: N5H9V-01SI
A Proud Member of the Carrier Family
Replaces: NEW
Manufacturer reserves the right to change, at any time, specifications and designs without notice and without obligations.