PA8TAN5
Split-System 2-Stage Air Conditioner
With R-454B Refrigerant
2 - 5 TONS

Installation Instructions

NOTE: For use with R-454B indoor units only. Read the entire instruction manual before starting the installation.

SAFETY CONSIDERATIONS 1
GENERAL 1
INSTALLATION 2
Check Equipment and Job Site 2
Install on a Solid, Level Mounting Pad 2
Clearance Requirements 3
Operating Ambient. 3
Make Piping Connections 3
MANDATORY PIPING REQUIREMENTS. 5
Make Electrical Connections 6
Compressor Crankcase Heater 8
Install Electrical Accessories 8
Airflow Selections (ECM Furnaces) 8
Airflow Selection for PF5T Fan Coils (Non-Communicating) 8
Start-Up 9
SEQUENCE OF OPERATION 9
SYSTEM FUNCTION AND SEQUENCE OF OPERATION 9
Compressor Operation 9
CHECK CHARGE 10
FINAL CHECKS 11
REPAIRING REFRIGERANT CIRCUIT 11
TROUBLESHOOTING 11
MAJOR COMPONENTS. 12
CARE AND MAINTENANCE 12
TRAINING 12

SAFETY CONSIDERATIONS

The following considerations are critical to upholding safety during installation:

IMPORTANT: This appliance shall only be installed by EPA qualified personnel having appropriate certification. This appliance is not intended for use by persons (including children) with reduced physical, sensory, or mental capabilities or lack of experience and knowledge, unless they have been given supervision or instruction concerning use of the appliance by a person responsible for their safety.

Improper installation, adjustment, alteration, service, maintenance, or use can cause explosion, fire, electrical shock, or other conditions which may cause death, personal injury, or property damage. Consult a qualified installer, service agency, or your distributor or branch for information or assistance. The qualified installer or agency must use factory-authorized kits or accessories when modifying this product. Refer to the individual instructions packaged with the kits or accessories when installing.

Follow all safety codes. Wear safety glasses, protective clothing, and work gloves. Use quenching cloth for brazing operations. Have a dry powder or CO_2 fire extinguisher available. Read these instructions thoroughly and follow all warnings or cautions included in literature and attached to the unit. Consult local building codes and current editions of the National Electrical Code (NEC) NFPA 70. In Canada, refer to current editions of the Canadian Electrical Code CSA 22.1.

Proper tools should be used that are designed for the refrigerant of the unit being installed. For A2L refrigerants, non-sparking tools are required. A refrigerant detector should be used prior to and during the installation process to check for leaks. Open flames or other ignition sources should not be present except during brazing. Brazing should only take place on refrigerant tubes open to the atmosphere or have been properly evacuated.

Recognize safety information. This is the safety-alert symbol ⚠ When you see this symbol on the unit and in instructions or manuals, be alert to the potential for personal injury.
Understand these signal words; DANGER, WARNING, and CAUTION. These words are used with the safety-alert symbol. **DANGER** identifies the most serious hazards which will result in severe personal injury or death. **WARNING** signifies hazards which could result in personal injury or death. **CAUTION** is used to identify unsafe practices which would result in minor personal injury or product and property damage. **NOTE** is used to highlight suggestions which will result in enhanced installation, reliability, or operation.

⚠ WARNING

ELECTRICAL SHOCK HAZARD

Failure to follow this warning could result in personal injury or death.

Before installing, modifying, or servicing system, main electrical disconnect switch must be in the OFF position. There may be more than 1 disconnect switch. Lock out and tag switch with a suitable warning label.

⚠ WARNING

EXPLOSION HAZARD

Failure to follow this warning could result in death, serious personal injury, death, and/or property damage.

Never use air or any gas containing oxygen for leak testing or operating refrigerant compressors. Never allow compressor suction pressure to operate in a vacuum with service valves closed. See Service Manual for pump-down instructions.

GENERAL

The following are general installation recommendations/NOTES to be observed throughout the installation process:

1. Locate unit away from windows, patios, decks, etc. where unit operation sound may disturb customer.
2. Ensure that vapor and liquid tube diameters are appropriate for unit capacity.
3. Run refrigerant tubes as directly as possible by avoiding unnecessary turns and bends. Tube bends shall be greater than 2.5 times the external pipe diameter.
4. Leave some slack between structure and unit to absorb vibration.
5. When passing refrigerant tubes through the wall, seal opening with RTV or another pliable silicon-based caulk. (See Fig. 1.)
6. Avoid direct tubing contact with water pipes, duct work, floor joists, wall studs, floors, and walls.

7. Do not suspend refrigerant tubing from joists and studs with a rigid wire or strap which comes in direct contact with tubing.(See Fig. 1.)
8. Ensure that tubing insulation is pliable and completely surrounds vapor tube.
9. When necessary, use hanger straps which are 1 in. (25.4 mm) wide and conform to shape of tubing insulation. (See Fig. 1.)
10. Isolate hanger straps from insulation by using metal sleeves bent to conform to shape of insulation.
11. Maximum allowed elevation is 10,000 feet (3,000 meters) above sea level.
12. Roof mounted units exposed to winds may require baffles.
13. Provision shall be made for expansion and contraction of long runs of piping.
14. Piping and fittings shall be protected as far as possible against adverse environmental effects. For example, the accumulation of dirt and debris.
15. Piping should be installed in a manner which reduces the likelihood of hydraulic shock damaging the system.
16. Certified piping and components must be used to protect against corrosion.
17. Flexible pipe elements shall be protected against mechanical damage, excessive stress by torsion, or other forces and should be checked for mechanical damage annually.
18. Piping material, routing, and installation shall include protection from physical damage in operation and service, and be in compliance with national and local codes and standards of installation site.
19. When setting up refrigeration piping, precautions shall be taken to avoid excessive vibration or pulsations.
20. Take care to conduct proper installation of equipment, because improper installation could lead to gas pulsations, which cause excessive noise in the living area.

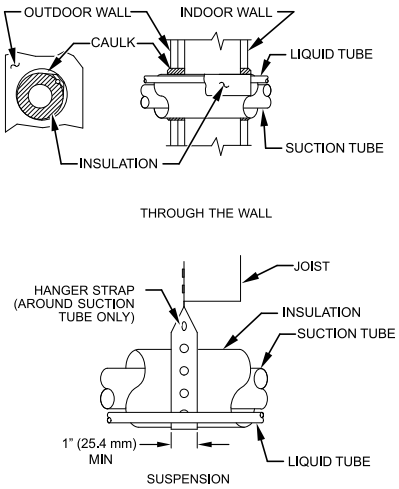

A07588

Fig. 1 – Connecting Tubing Installation

Refrigerant Tubing Connection Outdoor

IMPORTANT: Maximum liquid-line size is 3/8-in. OD for all residential applications including long line. Refer to Residential Piping and Long Line Guideline for further information.

IMPORTANT: Always install the factory-supplied liquid-line filter drier. If replacing the filter drier, refer to Product Data Digest for appropriate part number. Obtain replacement filter driers from your distributor or branch.

INSTALLATION

IMPORTANT: All split system and packaged air conditioners must be installed pursuant to applicable regional efficiency standards issued by the Department of Energy.

⚠ CAUTION

CUT HAZARD

Failure to follow this caution may result in personal injury.

Sheet metal parts may have sharp edges or burrs. Use care and wear appropriate protective clothing and gloves when handling parts.

Check Equipment and Job Site

Unpack Unit

Move to final location. Remove carton taking care not to damage unit.

Inspect Equipment

File claim with shipping company prior to installation if shipment is damaged or incomplete. Locate unit rating plate on unit corner panel. It contains information needed to properly install unit. Check rating plate to be sure unit matches job specifications.

Install on a Solid, Level Mounting Pad

⚠ CAUTION

UNIT OPERATION HAZARD

Failure to follow this caution may result in equipment damage or improper operation.

Locate the unit in such a way that it is stable in all circumstances including adverse weather conditions.

If conditions or local codes require the unit be attached to pad, tie down bolts should be used and fastened through knockouts provided in unit base pan. Refer to unit mounting pattern in Fig. 2 to determine base pan size and knockout hole location.

For hurricane tie downs, contact local distributor for details and PE (Professional Engineer) certification, if required by local authorities.

On rooftop applications, mount on level platform or frame. Place unit above a load-bearing wall and isolate unit and tubing set from structure. Arrange supporting members to adequately support unit and minimize transmission of vibration to building. Consult local codes governing rooftop applications.

Roof mounted units exposed to winds may require wind baffles. Consult the Application Guideline and Service Manual - Residential Split System Air Conditioners and Heat Pumps for wind baffle construction.

Unit must be level to within ±2° (±3/8 in./ft,±9.5 mm/m.) per compressor manufacturer specifications.

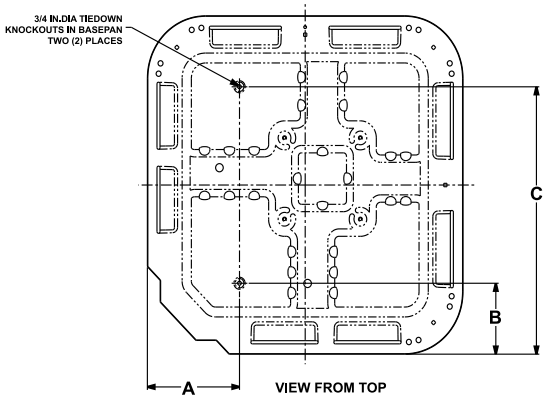

UNIT BASE PAN Dimension in. (mm)	TIEDOWN KNOCKOUT LOCATIONS in. (mm)		
	A	B	C
31–1/2 X 31–1/2 (800 X 800)	9–1/8 (231.8)	6–9/16 (166.7)	24–11/16 (627.1)
35 X 35 (889 X 889)	9–1/8 (231.8)	6–9/16 (166.7)	28–7/16 (722.3)

A05177

Fig. 2 – Tied-own Knockout Locations

Clearance Requirements

When installing, allow sufficient space for airflow clearance, wiring, refrigerant piping, and service. Allow 24 in. (610 mm) clearance to service end of unit and 48 in. (1219 mm) above unit. For proper airflow, a 6-in. (152 mm) clearance on 1 side of unit and 12-in. (305 mm) on all remaining sides must be maintained. Maintain a distance of 24 in. (609.6 mm) between units or 18 in. (457.2 mm) if no overhang within 12 ft. (4 m). Position so water, snow, or ice from roof or eaves cannot fall directly on unit. On rooftop applications, locate unit at least 6 in. (152 mm) above roof surface.

NOTE: 18" (457 mm) clearance option described above is approved for outdoor units with wire grille coil guard only. Units with louver panels require 24" (610 mm) between units.

Operating Ambient

The minimum outdoor operating ambient in cooling mode without accessory is 55°F (13°C).

Make Piping Connections

⚠ WARNING

PERSONAL INJURY AND ENVIRONMENTAL HAZARD

Failure to follow this warning could result in personal injury or death.

Relieve pressure and recover all refrigerant before system repair or final unit disposal. Use all service ports and open all flow-control devices, including solenoid valves.

Federal regulations require that you do not vent refrigerant to the atmosphere. Recover during system repair or final unit disposal.

⚠ CAUTION

UNIT DAMAGE HAZARD

Failure to follow this caution may result in equipment damage or improper operation.

If ANY refrigerant tubing is buried, provide a 6-in (152 mm) vertical rise at service valve. Refrigerant tubing lengths up to 36-in (914 mm) may be buried without further special consideration. Do not bury lines more than 36-in. (914 mm).

Outdoor units may be connected to indoor section using accessory tubing package or field-supplied refrigerant grade tubing of correct size and condition. Rated tubing diameters shown in Table 1 are recommended up to 80 ft. (24 m). See Product Data for acceptable alternate vapor diameters and associated capacity losses. For tubing requirements beyond 80 ft. (24 m), substantial capacity and performance losses can occur. Following the recommendations in the Residential Piping and Long Line Guideline will reduce these losses. Refer to Table 1 for field tubing diameters. Refer to Table 2 for accessory requirements.

There are no buried-line applications greater than 36-in. (914 mm) allowed.

If refrigerant tubes or indoor coil are exposed to atmosphere, they must be evacuated to 500 microns to eliminate contamination and moisture in the system.

Refrigerant pipe should be installed with the minimum length possible and practical for the application. Piping should be protected from physical damage in operation and in service and be in compliance with national and local codes such as ASHRAE 15, ASHRAE 15.2, IAPMO Uniform Mechanical Code, ICC International Mechanical Code, or CSA B52. When piping is installed through studs in a wall, steel plates should be used for protection with a minimum thickness of 16 gage.

All field joints shall be accessible for inspection prior to being covered or enclosed.

Outdoor Unit Connected to Factory Approved R-454B Indoor Unit

When outdoor unit is connected to factory-approved R-454B indoor unit, outdoor unit contains the approximate system refrigerant charge for operation with AHRI rated indoor unit when connected by 15 ft (4.57 m) of field-supplied or factory accessory tubing and factory-supplied filter drier. For all sizes, adjust charge by adding or removing 0.6 oz/ft of 3/8 liquid line above or below 15 ft., respectively.

Refrigerant Tubing Connection Outdoor

Connect vapor and liquid tubes to fittings on vapor and liquid service valves (see Table 1.) Use refrigerant grade tubing

Table 1 – Refrigerant Connections and Recommended Liquid and Vapor Tube Diameters

UNIT SIZE (SERIES)	LIQUID	RATED VAPOR*	
	Connection & Max. Tube Diameter	Connection Diameter	Tube Diameter
24	3/8	3/4	3/4
36	3/8	7/8	7/8
48	3/8	7/8	1-1/8
60	3/8	7/8	1-1/8

* Units are rated with 25 ft. (7.6 m) of lineset. See Product Data sheet for performance data when using different size and length linesets.

Notes:

1. Do not apply capillary tube or fixed orifice indoor coils to these units.
2. For Tubing Set lengths between 80 and 200 ft. (24.38 and 60.96 m) horizontal or 35 ft. (10.7 m) vertical differential 250 ft. (76.2 m) Total Equivalent Length), refer to the Residential Piping and Long Line Guideline -Air Conditioners and Heat Pumps using R-454B refrigerant.
3. For alternate liquid line options, see Product Data or Residential Piping and Long Line Application Guideline.

Table 2 – Accessory Usage

Accessory	Required for Low Ambient Cooling Applications (Below 55°F / 12.8°C)	Required for Long Line Applications*	Required for Sea Coast Applications (within 2 miles/3.2 km)
Compressor Start Assist Capacitor and Relay	Yes	Yes	No
Crankcase Heater	Yes	Yes	No
Evaporator Freeze Thermostat	Yes	No	No
Liquid Line Solenoid Valve	No	See Residential Piping and Long Line Guideline	No
Low-Ambient Pressure Switch	Yes	No	No
Support Feet	Recommended	No	Recommended
Winter Start Control	Yes	No	No

*. For tubing line sets between 80 and 200 ft. (24.38 and 60.96 m) and/or 35 ft. (10.7 m) vertical differential, refer to Residential Piping and Long Line Guideline.

Service Valves

Service valves are closed and plugged from the factory. Outdoor units are shipped with a refrigerant charge sealed in the unit. Leave the service valves closed until all other refrigerant system work is complete or the charge will be lost. Leave the plugs in place until line set tubing is ready to be inserted.

Brazing Connections

⚠ WARNING

FIRE HAZARD

Failure to following this warning could result in personal injury, death and/or property damage.

Refrigerant and oil mixture could ignite and burn as it escapes and contacts brazing torch. Make sure the refrigerant charge is properly removed from both the high and low sides of the system before brazing any component or lines.

⚠ CAUTION

BURN HAZARD

Failure to follow this Caution may result in personal injury.

Components will be HOT after brazing. Wear appropriate personal protective equipment and allow to cool before handling parts and equipment.

For brazing connections, use a properly sized swedge tool to create a swedge (bell) on one of the two copper tubes being connected. Alternatively, a copper coupling can be used which will require two braze joints instead of one.

Clean line set tube ends with emery cloth or steel brush. Remove any grit or debris.

Connect vapor tube to fitting on outdoor unit vapor service valves (see Table 1). Connect liquid tubing to adapter tube on liquid service valve. Use refrigerant grade tubing.

⚠ CAUTION

UNIT DAMAGE HAZARD

Failure to follow this caution may result in equipment damage or improper operation.

Service valves must be wrapped in a heat–sinking material such as a wet cloth while brazing.

Apply heat absorbing paste or heat sink product between service valve and joint. Wrap service valves with a heat sinking material such as a wet cloth.

After wrapping service valve with a wet cloth, tubing set can be brazed to service valve using either silver bearing or non–silver bearing brazing material. Do not use soft solder (materials which melt below 800°F/427°C). Braze joints using a Sil-Fos or Phos-copper alloy. Consult local code requirements.

NOTE: Some outdoor units contain a mechanical fitting at the liquid distributor. This connection is not field serviceable and should not be disturbed.

NOTE: For Liquid Service Valve - Braze lineset to adapter tube BEFORE bolting adapter to valve. This helps prevent overheating and damage to plastic washer or o-ring.

For Vapor Service Valve - remove valve core from schrader port on Service Valve BEFORE brazing. This helps prevent overheating and damage to valve seals (refer to Fig. 3). Replace valve core when brazing is completed.

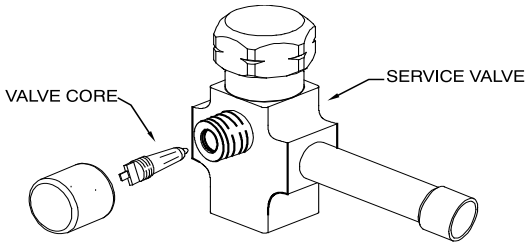

Fig. 3 – Vapor Service Valve

Mechanical Line Set Connections

If using mechanical or crimp-type line set connections, follow crimp tool manufacturer's instructions.

NOTE: Should use of the mechanical fittings cause failure of the fittings or failure of the equipment, such would not be covered under the equipment limited warranty.

Install Liquid-Line Filter Drier Indoor

⚠ CAUTION

UNIT DAMAGE HAZARD

Failure to follow this caution may result in equipment damage or improper operation.

1. Installation of filter drier in liquid line is required.
2. Filter drier must be wrapped in a heat-sinking material such as a wet cloth while brazing.

Refer to Fig. 4 and install filter drier as follows:

1. Braze 5-in. liquid tube to the indoor coil.
2. Wrap filter drier with damp cloth.
3. Braze filter drier to above 5-in. (127 mm) liquid tube. Flow arrow must point towards indoor coil.
4. Connect and braze liquid refrigerant tube to the filter drier.

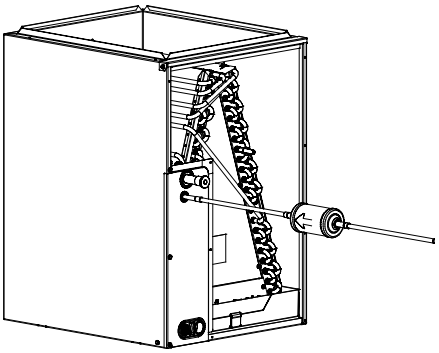

A05178

Fig. 4 – Liquid Line Filter Drier

MANDATORY PIPING REQUIREMENTS

Pressure Proof Check

Refrigerant tubes and indoor coil should be pressure tested with an inert gas such as nitrogen. Pressurize the system with the inert gas to the Low Side Test Pressure listed on the outdoor unit rating plate.

1. Perform a pressure check of the unit with a nitrogen charge of about 200 psi
2. The nitrogen holding charge must NOT decrease in pressure for 1 hour, as indicated by the test gage. The test gage resolution must not exceed 5% of the holding charge.

Final Tubing Check

IMPORTANT: Check to be certain factory tubing on both indoor and outdoor unit has not shifted during shipment. Ensure tubes are not rubbing against each other or any sheet metal. Pay close attention to feeder tubes, making sure wire ties on feeder tubes are secure and tight.

Leak Check

⚠ WARNING

EXPLOSION HAZARD

Failure to follow this warning could result in death, serious personal injury, death, and/or property damage.

Never exceed test pressures listed on the rating plate when pressure testing an outdoor unit.

⚠ WARNING

FIRE HAZARD

Failure to follow this warning could result in personal injury or death and/or property damage.

DO NOT USE FLAMES OR IGNITION SOURCES TO LEAK CHECK.

Vacuum unit to 500 microns. When isolating the unit from the pump, the pressure shall not rise above 1500 microns in 10 minutes.

The deep vacuum method requires a vacuum pump capable of pulling a vacuum of 500 microns and a vacuum gage capable of accurately measuring this vacuum depth. The deep vacuum method is the most positive way of assuring a system is free of air and liquid water. A tight dry system will hold a vacuum of 1000 microns after approximately 7 minutes. (See Fig. 5.)

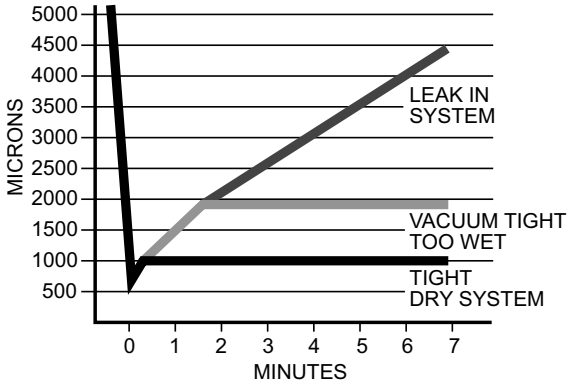

A95424

Fig. 5 – Deep Vacuum Graph

Evacuate Refrigerant Tubing and Indoor Coil

⚠ CAUTION

UNIT DAMAGE HAZARD

Failure to follow this caution may result in equipment damage or improper operation.

Never use the system compressor as a vacuum pump.

Refrigerant tubes and indoor coil should be evacuated using the recommended deep vacuum method of 500 microns. The alternate triple evacuation method may be used (see triple evacuation procedure in service manual). Always break a vacuum with dry nitrogen.

Final Tubing Check

IMPORTANT: Check to be certain factory tubing on both indoor and outdoor unit has not shifted during shipment. Ensure tubes are not rubbing against each other or any sheet metal or wires. Pay close attention to feeder tubes, making sure wire ties on feeder tubes are secure and tight.

Make Electrical Connections

WARNING

ELECTRICAL SHOCK HAZARD

Failure to follow this warning could result in personal injury or death.

Do not supply power to unit with compressor terminal box cover removed.

Be sure field wiring complies with local and national fire, safety, and electrical codes, and voltage to system is within limits shown on unit rating plate. Contact local power company for correction of improper voltage. See unit rating plate for recommended circuit protection device.

NOTE: Operation of unit on improper line voltage constitutes abuse and could affect unit reliability. See unit rating plate. Do not install unit in system where voltage may fluctuate above or below permissible limits.

NOTE: Use copper wire only between disconnect switch and unit.

NOTE: Install branch circuit disconnect of adequate size per NEC to handle unit starting current. Locate disconnect within sight and readily accessible from unit, per Section 440-14 of NEC.

Route Ground and Power Wires

Remove access panel to gain access to unit wiring. Extend wires from disconnect through power wiring hole provided and into unit control box.

Connect Ground and Power Wires

WARNING

ELECTRICAL SHOCK HAZARD

Failure to follow this warning could result in personal injury or death.

The unit cabinet must have an uninterrupted or unbroken ground to minimize personal injury if an electrical fault should occur. The ground may consist of electrical wire or metal conduit when installed in accordance with existing electrical codes.

This appliance incorporates an earth connection for safety purposes only. Connect ground wire to ground connection in control box for safety. Connect power wiring to contactor as shown in Fig. 6.

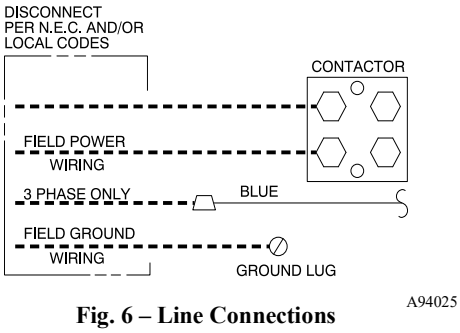

Fig. 6 – Line Connections

Connect Control Wiring

NOTE: This unit has a transformer in the outdoor unit that powers the control board and compressor solenoid and does not require 24VAC "R" from the indoor unit. This unit can be installed in both communicating and non-communicating indoor units.

Route 24-v control wires through control wiring grommet and connect leads to control wiring (See Fig. 7 and Fig. 8). Refer to Installation Instructions packaged with thermostat.

All low voltage wiring, including those from the 2-stage AC, should be connected in the low voltage side of the panel.

Use No. 18 AWG color-coded, insulated (35°C minimum) wire. If thermostat is located more than 100 ft. (30.48 m) from unit, as measured along the control voltage wires, use No. 16 AWG color-coded wire to avoid excessive voltage drop.

All wiring must be NEC Class 2 and must be separated from incoming power leads.

Use furnace transformer, fan coil transformer, or accessory transformer for control power, 24v/40va minimum.

NOTE: Use of available 24v accessories may exceed the minimum 40va power requirement. Determine total transformer loading and increase the transformer capacity or split the load with an accessory transformer as required.

NOTE: Factory Authorized Dissipation System must be installed with the indoor unit.

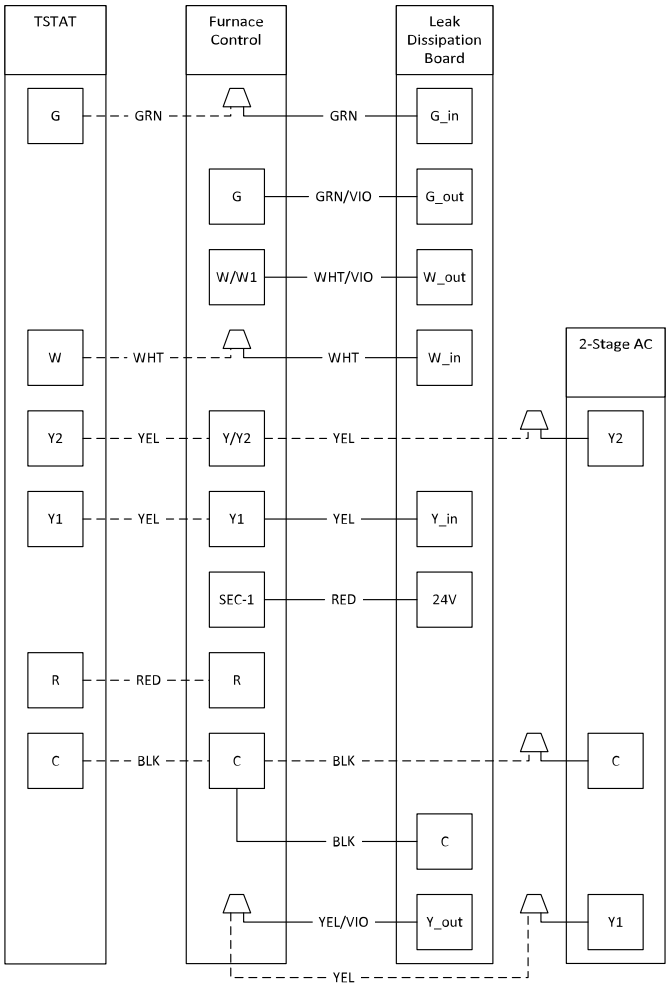

Fig. 7 – Thermost with Variable Speed Furnace and 2-Stage AC

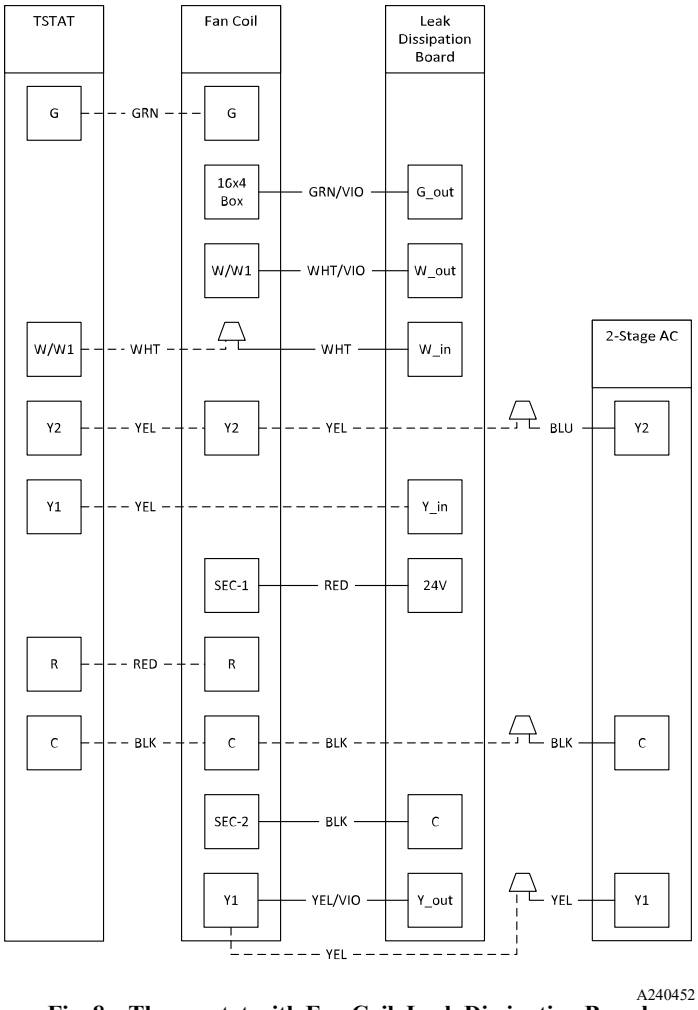

Fig. 8 – Thermostat with Fan Coil, Leak Dissipation Board and 2-Stage AC

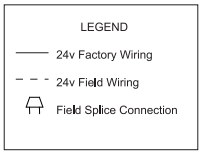

Final Wiring Check

IMPORTANT: Check factory wiring and field wire connections to ensure terminations are secured properly. Check wire routing to ensure wires are not in contact with tubing, sheet metal, etc.

Compressor Crankcase Heater

When equipped with a crankcase heater, furnish power to heater a minimum of 24 hours before starting unit. To furnish power to heater only, set thermostat to OFF and close electrical disconnect to outdoor unit.

A crankcase heater is required if refrigerant tubing is longer than 80 ft. (24.4 m) or when outdoor unit is 35 ft. (11 m) below indoor unit. Refer to the Application Guideline and Service Manual Long Line Section-Residential Split-System Air Conditioners and Heat Pumps.

Install Electrical Accessories

Refer to the individual instructions packaged with kits or accessories when installing.

⚠ WARNING

PERSONAL INJURY AND/OR PROPERTY DAMAGEHAZARD

Failure to follow this warning could result in personal injury and/or property damage.

For continued performance, reliability, and safety, the only approved accessories and replacement parts are those specified by the equipment manufacturer. The use of non-manufacturer approved parts and accessories could invalidate the equipment limited warranty and result in fire risk, equipment supplier.

Please review manufacturer's instructions and replacement part catalogs available from your equipment supplier.

Airflow Selections (ECM Furnaces)

The ECM Furnaces provide blower operation to match the capacities of the compressor during high and low stage cooling operation. Tap selections on the furnace control board enable the installing technician to select the proper airflows for each stage of cooling. Refer to the furnace literature for further details.

The variable speed furnaces provide blower operation to match the capacities of the compressor during high and low stage cooling operation. The furnace control board allows the installing technician to select the proper airflows for each stage of cooling. Refer to the furnace literature for further details.

Airflow Selection for PF5T Fan Coils (Non-Communicating)

The PF5T provides high- and low-stage blower operation to match the capacities of the compressor at high- and low-stage.

To select recommended airflow, refer to the PF5T Installation Instructions. The PF5T utilizes a control board that allows the installing technician to select proper airflows. This fan coil has an adjustable blower-off delay factory set at 90 sec. for high-and low stage blower operation.

Start-Up

⚠ WARNING

ENVIRONMENTAL HAZARD

Failure to follow this warning could result in environmental damage.

Federal regulations require that you do not vent refrigerant to the atmosphere. Recover during system repair or final unit disposal.

⚠ CAUTION

UNIT OPERATION AND SAFETY HAZARD

Failure to follow this caution may result in personal injury, equipment damage or improper operation.?

- Do not overcharge system with refrigerant.
- Do not operate unit in a vacuum or at negative pressure.
- Compressor dome temperatures may be hot.

⚠ CAUTION

PERSONAL INJURY HAZARD

Failure to follow this caution may result in personal injury.

Wear safety glasses, protective clothing, and gloves when handling refrigerant and observe the following:

- Front seating service valves are equipped with Schrader valves.

Follow these steps to properly start up the system:

⚠ WARNING

PERSONAL INJURY HAZARD

Failure to follow this warning could result in personal injury or death.

Do not use power tools to open and close service valves.

Power tools can cause valve stem to suddenly be ejected from the valve body followed by a high pressure refrigerant leak.

1. After system is evacuated, fully back seat (open) liquid and vapor service valves.
2. Unit is shipped with valve stem(s) front seated (closed) and caps installed. Replace stem caps after system is opened to refrigerant flow (back seated). Replace caps finger-tight and tighten with wrench an additional 1/12 turn.
3. Close electrical disconnects to energize system.
4. Set room thermostat at desired temperature. Ensure that set point is below indoor ambient temperature and is set low enough to energize high stage. In order to start the system in high stage, refer to the literature for the installed thermostat and adjust the set point so that the differential between the room temperature and the set temperature energizes Y2.
5. Set room thermostat to COOL and fan control to ON or AUTO mode, as desired.
6. Operate unit for 15 minutes. Verify system refrigerant charge by measuring the sub-cooling and comparing with the published sub-cool on the rating plate.

SEQUENCE OF OPERATION

Turn on power to indoor and outdoor units. Transformer is energized.

On a call for cooling, thermostat makes circuits R-Y and R-G. Circuit R-Y energizes contactor, starting outdoor fan motor and compressor circuit. R-G energizes indoor unit blower relay, starting indoor blower motor on high speed.

When thermostat is satisfied, its contacts open, de-energizing contactor and blower relay. Compressor and motors should stop.

If indoor unit is equipped with a time-delay relay circuit, the indoor blower will run up to 30 or 90 seconds to increase system efficiency.

SYSTEM FUNCTION AND SEQUENCE OF OPERATION

This model utilizes a 2-stage cooling indoor thermostat. With a call for first stage cooling, the outdoor fan and low-stage compressor are energized. If low-stage cannot satisfy cooling demand, high-stage is energized by the second stage of indoor thermostat. After second stage is satisfied, the unit returns to low-stage operation until first stage is satisfied or until second stage is required again.

When both first stage and second stage cooling are satisfied, the compressor will shut off. Therefore, with first stage of cooling Y1 is powered on; and with second stage of cooling Y1 and Y2 are powered on. When a 2-stage unit is operating at low-stage, system vapor (suction) pressure will be higher than a standard single-stage system or high-stage operation.

Compressor Operation

The basic scroll design has been modified with the addition of an internal unloading mechanism that opens a by-pass port in the first compression pocket, effectively reducing the displacement of the scroll.

The opening and closing of the by-pass port is controlled by an internal electrically operated solenoid. The modulated scroll uses a single step of unloading to go from full capacity to approximately 67% capacity. A single speed, high efficiency motor continues to run while the scroll modulates between the two capacity steps. Modulation is achieved by venting a portion of the gas in the first suction pocket back to the low side of the compressor, thereby reducing the effective displacement of the compressor. Full capacity is achieved by blocking these vents, thus increasing the displacement to 100%.

A DC solenoid in the compressor controlled by a rectified 24 volt AC signal in the external solenoid plug moves the slider ring that covers and uncovers these vents. The vent covers are arranged in such a manner that the compressor operates at approximately 67% capacity when the solenoid is not energized and 100% capacity when the solenoid is energized. The loading and unloading of the two step scroll is done “on the fly” without shutting off the motor between steps.

NOTE: 67% compressor capacity translates to approximately 75% cooling capacity at the indoor coil.

CHECK CHARGE

NOTE: CHARGE IN HIGH STAGE ONLY

Factory charge amount and desired subcooling are shown on unit rating plate. Care should be taken to ensure proper refrigerant is used for charging. Refer to outdoor unit rating plate to determine proper refrigerant. Refrigerant cylinders used for charging should be kept in an appropriate position and grounded to earth before charging. Hose length should be kept to a minimum. Charging method is shown on information plate inside unit. To properly check or adjust charge, conditions must be favorable for subcooling charging. Favorable conditions exist when the outdoor temperature is between 70°F and 100°F (21.11°C and 37.78°C), and the indoor temperature is between 70°F and 80°F (21.11°C and 26.67°C). Follow the procedure below:

Unit is factory charged for 15ft (5 m) of lineset. Adjust charge by adding or removing 0.6 oz/ft of 3/8 liquid line above or below 15ft (5 m) respectively.

For standard refrigerant line lengths (80 ft/24.38 m or less), allow system to operate in high-stage cooling mode at least 15 minutes. If conditions are favorable, check system charge by subcooling method. If any adjustment is necessary, adjust charge slowly and allow system to operate for 15 minutes to stabilize before declaring a properly charged system.

If the indoor temperature is above 80°F (27°C), and the outdoor temperature is in the favorable range, adjust system charge by weight based on line length and allow the indoor temperature to drop to 80°F (27°C) before attempting to check system charge by subcooling method as described above.

If the indoor temperature is below 70°F (21°C), or the outdoor temperature is not in the favorable range, adjust charge for line set length above or below 15ft (5 m) only. Charge level should then be appropriate for the system to achieve rated capacity. The charge level could then be checked at another time when both indoor and outdoor temperatures are in a more favorable range.

NOTE: If line length is beyond 80 ft (24.38 m) or greater than 20 ft (6.10 m) vertical separation, See Long Line Guideline for special charging requirements.

Final charge should be recorded on the outdoor unit charging label with permanent and legible writing. Total refrigerant charge is factory charge plus any added charge. Verify that the indoor space served by the indoor unit, including spaces connected by ductwork, exceed the minimum room size as listed on the outdoor unit charging label. Refer to Table 3.

Table 3 – Minimum Room Area Charging Table

Total System Charge (lbs.)	Minimum Floor Area (sq. ft.)
4	61
5	76
6	91
7	106
8	122
9	137
10	152
11	167
12	182
13	196
14	213
15	226
16	243
17	256
18	274
19	289
20	304
21	319
22	335
23	350
24	365
25	380

Units with TXV

Units installed with a TXV require charging by the subcooling method.

1. Operate unit a minimum of 15 minutes before checking charge.
2. Measure liquid service valve pressure by attaching an accurate gage to service port.
3. Measure liquid line temperature by attaching an accurate thermistor type or electronic thermometer to liquid line near outdoor coil.
4. Refer to unit rating plate for required subcooling temperature.
5. Refer to Table 4. Find the point where required subcooling temperature intersects measured liquid service valve pressure.
6. To obtain required subcooling temperature at a specific liquid line pressure, add refrigerant if liquid line temperature is higher than indicated or reclaim refrigerant if temperature is lower. Allow a tolerance of ±3°F (±1.7°C).

Manufacturer reserves the right to change, at any time, specifications and designs without notice and without obligations.

Table 4 – Required Liquid Line Temperature

Liquid (PSIG) Pressure at Service Valve	R-454B Required Subcooling Temperature (°F)					
	6	8	10	12	14	16
238	78	76	74	72	70	68
245	80	78	76	74	72	70
252	82	80	78	76	74	72
260	84	82	80	78	76	74
268	86	84	82	80	78	76
276	88	86	84	82	80	78
284	90	88	86	84	82	80
292	92	90	88	86	84	82
301	94	92	90	88	86	84
309	96	94	92	90	88	86
318	98	96	94	92	90	88
327	100	98	96	94	92	90
336	102	100	98	96	94	92
346	104	102	100	98	96	94
355	106	104	102	100	98	96
365	108	106	104	102	100	98
375	110	108	106	104	102	100
385	112	110	108	106	104	102
396	114	112	110	108	106	104
406	116	114	112	110	108	106
417	118	116	114	112	110	108
428	120	118	116	114	112	110
439	122	120	118	116	114	112
450	124	122	120	118	116	114

Verify units for proper switching between low & high stages

Check the suction pressures at the service valves. Suction pressure should be reduced by 3-10% when switching from low to high capacity.

Compressor current should increase 20-45% when switching from low to high stage. The compressor solenoid when energized in high stage, should measure 24vac at leads inside control box.

When the compressor is operating in low stage the 24v DC compressor solenoid coil is de-energized. When the compressor is operating in high stage, the 24v DC solenoid coil is energized. The solenoid plug harness that is connected to the compressor HAS an internal rectifier that converts the 24v AC signal to 24v DC. **DO NOT INSTALL A PLUG WITHOUT AN INTERNAL RECTIFIER**.

Unloader Test Procedure

The unloader is the compressor internal mechanism, controlled by the DC solenoid, that modulates between high and low stage. If it is suspected that the unloader is not working, the following methods may be used to verify operation.

1. Operate the system and measure compressor amperage. Cycle the unloader on and off at 30 second plus intervals at the thermostat (from low to high stage and back to low stage). Wait 5 seconds after staging to high before taking a reading. The compressor amperage should go up or down at least 20 percent.
2. If the expected result is not achieved, remove the solenoid plug from the compressor and with the unit running and the thermostat calling for high stage, test the voltage output at the plug with a DC voltmeter. The reading should be 24 volts DC.
3. If the correct DC voltage is at the control circuit molded plug, measure the compressor unloader coil resistance. The resistance should be approximately 1640 ohms. If the coil resistance is infinite or is grounded, the compressor must be replaced.

FINAL CHECKS

IMPORTANT: Before leaving job, be sure to do the following:

1. Ensure that all wiring is routed away from tubing and sheet metal edges to prevent rub-through or wire pinching.
2. Ensure that all wiring and tubing is secure in unit before adding panels and covers. Securely fasten all panels and covers.
3. Tighten service valve stem caps to 1/12-turn past finger tight.
4. Leave Owner's Manual with owner. Explain system operation and periodic maintenance requirements outlined in manual.
5. Fill out Dealer Installation Checklist and place in customer file.

REPAIRING REFRIGERANT CIRCUIT

When breaking into the refrigerant circuit to make repairs, or for any other purpose, the following procedures shall be used.

1. Safely remove the refrigerant using a recovery pump certified for flammable refrigerants.
2. Purge the refrigerant circuit with nitrogen gas.
3. Evacuate the refrigerant circuit to 1500 microns.
4. Break vacuum with a nitrogen purge of the refrigerant circuit ensuring that the outlet of the vacuum pump is not near a potential ignition source.
5. Open the circuit by cutting or brazing.

TROUBLESHOOTING

If the compressor fails to operate with a cooling call, Table 5 can be used to verify if there is any damage to the compressor windings causing system malfunction.

Table 5 – Winding Resistance

Winding	Winding resistance at 70°F +/- 20°F (21.11°C +/- 11.11°C)			
	Unit Size			
	024	036	048	060
Start (S-C)	1.652	1.471	1.660	1.203
Run (R-C)	1.065	0.728	0.436	0.383

Troubleshooting for Proper Switching Between Low and High Stages

Check the suction pressures at the service valves. Suction pressure should be reduced by 3-10% when switching from low to high stage.

NOTE: The liquid pressures are very similar between low-and high-stage operation, so liquid pressure should not be used for troubleshooting.

Compressor current should increase 20 to 45% when switching from low to high stage. The compressor solenoid when energized in high stage, should measure 24vac at the leads inside control box. When the compressor is operating in low stage, the 24v DC compressor solenoid coil is de-energized. When the compressor is operating in high stage, the 24v DC solenoid coil is energized. The solenoid plug harness that is connected to the compressor has an internal rectifier that converts the 24v AC signal to 24v DC. DO NOT INSTALL A PLUG WITHOUT AN INTERNAL RECTIFIER

MAJOR COMPONENTS

2-Stage Compressor

The 2-stage compressor contains motor windings that provide 2-pole (3500 RPM) operation.

Compressor Internal Relief

The compressor is protected by an internal pressure relief (IPR) which relieves discharge gas into compressor shell when differential between suction and discharge pressures exceeds 550 - 625 psi. The compressor is also protected by an internal overload attached to motor windings.

Compressor Control Contactor

The contactor has a 24 volt coil and is controlled by Y1 input from the thermostat

CARE AND MAINTENANCE

For continuing high performance and to minimize possible equipment failure, periodic maintenance must be performed on this equipment.

Frequency of maintenance may vary depending upon geographic areas, such as coastal applications. See Users Manual for information.

TRAINING

My Learning Center is your central location for professional residential HVAC training resources that help strengthen careers and businesses. We believe in providing high quality learning experiences both online and in the classroom.

Access My Learning Center with your HVAC Partners credentials at www.mlctraining.com. Please contact us a mylearning@carrier.com with questions.

©2026 Carrier. All rights reserved.

Edition Date: 02/26

Catalog No: PA8TAN5-02SI

A Proud Member of the Carrier Family

Replaces: **PA8TAN5-01SI**

Manufacturer reserves the right to change, at any time, specifications and designs without notice and without obligations.