820TA/821TA
4-Way Multipoise Induced Combustion Gas Furnace
Sizes 045 thru 135

bryant®

Product Data

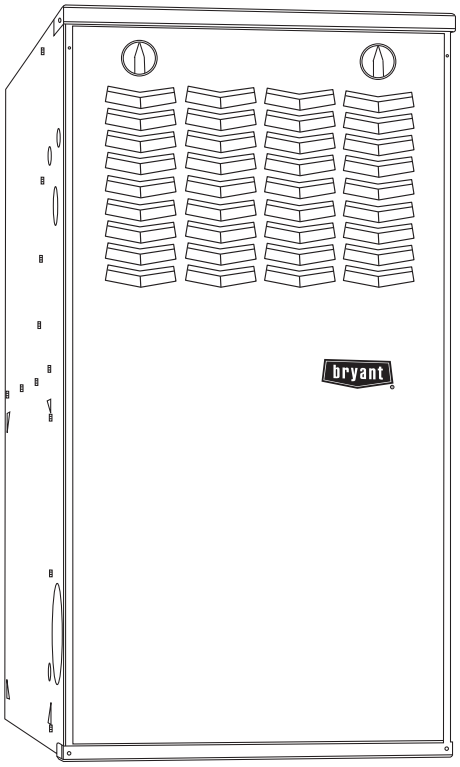

A10252

THE TWO-STAGE GAS FURNACE

The Two-stage, Variable-speed, 4-way Multipoise Gas Furnace offers outstanding comfort in an 80% AFUE furnace.
You get the benefits of Perfect Heat™: reduced drafts, reduced sound levels, longer cycles, less temperature swings between cycles, less temperature differences between rooms, and improved indoor air quality. Plus, it features a dehumidify mode and the ability to change continuous fan speeds from the thermostat. The 820TA/821TA furnaces are approved for use with natural or propane gas. 821TA - Low NOx units are designed for California installations and meet 40 ng/J NOx emissions. Can be installed in air quality management districts with a 40 ng/J NOx emissions requirement.

Use of the AHRI Certified TM Mark indicates a manufacturer's participation in the program. For verification of certification for individual products, go to www.ahridirectory.org.

PERFORMANCE

- **Perfect Heat® operation**
  Two-stage heating even with single-stage thermostat-patented Adaptive Control Technology
  Reduced operating sound through low-stage operation and sound elimination combustion system
- **Two-stage heating with single-stage thermostat with patented Adaptive Control Technology**
- **Microprocessor based "smart" control center**
  Fan on -Continuous Fan speed adjustable from thermostat
  Adjustable heating air temperature rise
  Adapts heating stages to meet demand
  Dehumidify mode
  Enhanced diagnostics with LED and reflective sight glass, non-volatile fault code memory, and self test feature
  On-board fuse for transformer protection
- **Perfect Light™ Igniter**
- **Patented blocked vent safeguard to ensure proper furnace venting**
- **Insulated blower compartment**
- **Inner door for tighter sealing**
- **Variable-speed ECM blower motor**
  Increased SEER ratings for AC and HP systems as compared to the Air Conditioning Heating and Refrigeration Institute's standard coil-only rating when paired with selected Bryant evaporator coils.
  Perfectly matches CFM to cooling system at all static points
- **Noise elimination combustion system**

INSTALLATION FLEXIBILITY

- **4-way Multipoise furnace, 13 vent applications**
- **Compact design - only 33-1/3 in. (847 mm) tall**

APPLICATIONS

- **SmartEvap™ can lower the humidity level in the home by nearly 10 percent**
- **All models are Chimney friendly when used with accessory vent kit**
- **HYBRID HEAT® Dual Fuel System compatible**

CERTIFICATION

- **Cabinet air leakage less than 2.0% at 1.0 in. W.C. and cabinet air leakage less than 1.4% at 0.5 in. W.C. when tested in accordance with ASHRAE standard 193**
- **Residential installations eligible for consumer financing through the Retail Credit Program**

FURNACE COMPONENTS

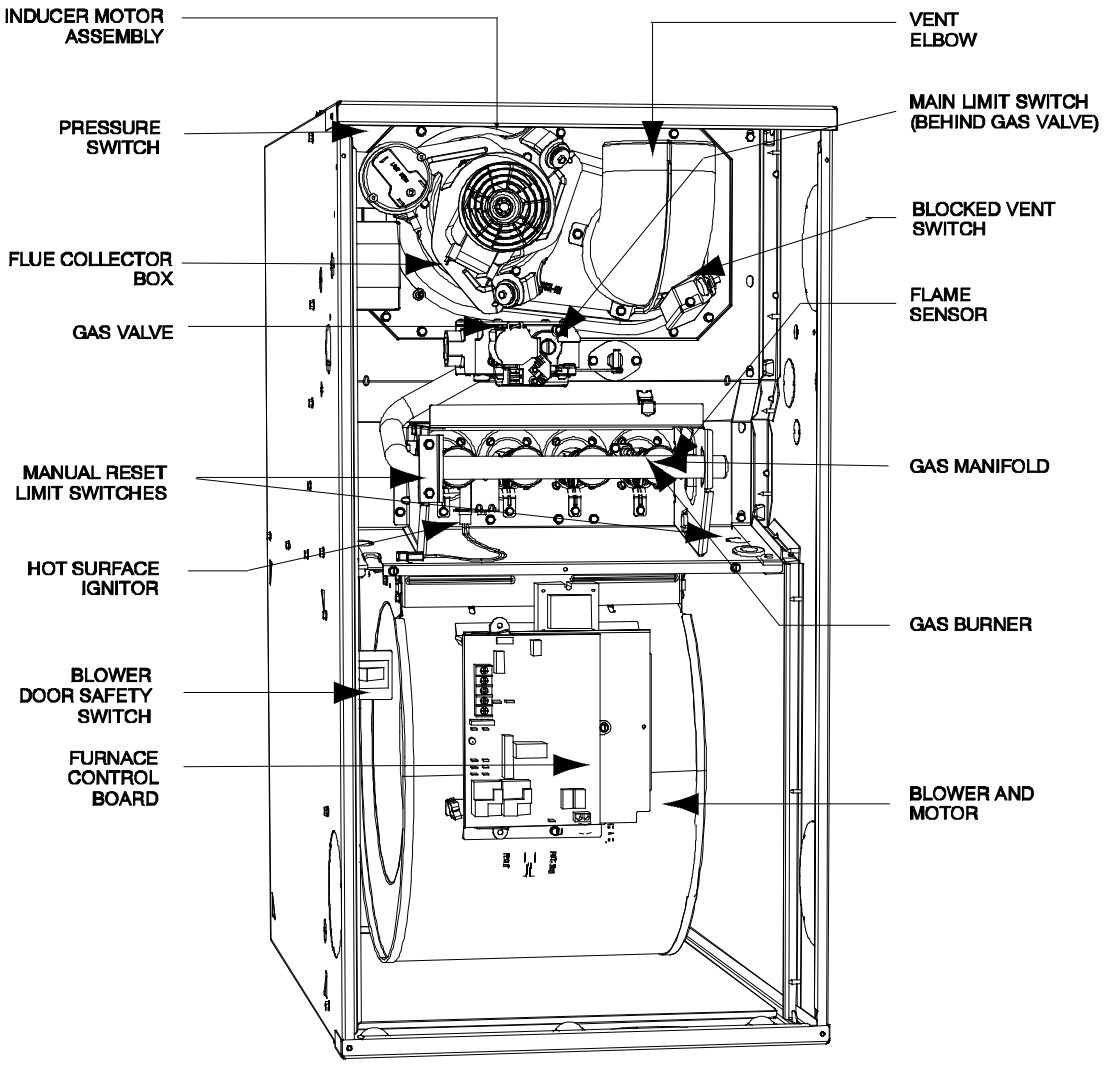

A190086

NOTE: The furnaces are factory shipped for use with natural gas. These furnaces can be field-converted for propane gas with a factory-authorized and listed accessory conversion kit.

EXAMPLE OF MODEL NUMBER NOMENCLATURE

1 Heat Exchanger	2 Tier/NOx	3 AFUE/NOx	4 Heating Stages	5 Major Series	6, 7 Cooling Capacity (CFM)	8 - 10 Heat Input	11 Motor Type	12 - 13 Width	14 Voltage (1-phase)	15 Un-used	16 Minor Series
9	8	7	M	B	42	060	C	17	A	-	A
8 = 80% 9 = 90+%	0 = Base 1 = Legacy Line 2 = Preferred 3 = Ultra Low Nox 8 = Evolution	0 = 80% 1 = 80% Low Nox ---- 2 = 92% 5 = 95% 6 = 96% 7 = 97% 8 = 98%	M = Modulating S = Single Stage T = Two-Stage	A B C D —	24 = 800 CFM 30 = 1000 CFM 36 = 1200 CFM 42 = 1400 CFM 48 = 1600 CFM 60 = 2000 CFM 66 = 2200 CFM	026 = 26,000 BTU/h 040 = 40,000 BTU/h 060 = 60,000 BTU/h —	C = Comm. Variable-Speed Constant Airflow (VCA) ECM E= Fixed-Speeds Constant Torque (FCT) ECM V = Variable-Speed Constant Torque (VCT) ECM	14 = 14.2" 17 = 17.5" 21 = 21.0" 24 = 24.5"	A = 110V/60Hz B = 230V/50Hz	-	A B C —

A190042

For California Residents:

For installation in SCAQMD only: This furnace does not meet the SCAQMD Rule 1111 14 ng/J NOx emission limit, and thus is subject to a mitigation fee of up to $450. This furnace is not eligible for the Clean Air Furnace Rebate Program: www.CleanAirFurnaceRebate.com

DIMENSIONAL DRAWING

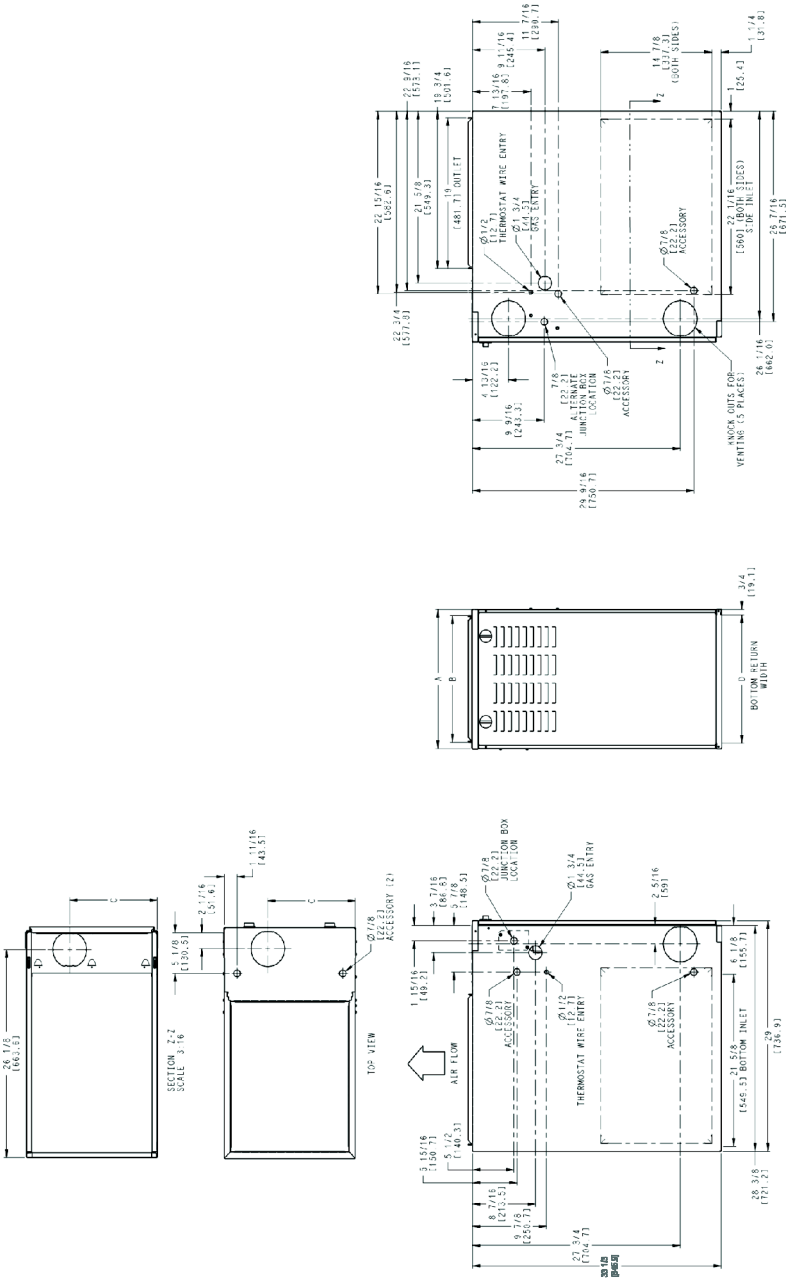

A190084

FURNACE SIZE	A CABINET WIDTH	B OUTLET WIDTH	C TOP AND BOTTOM FLUE COLLAR	D BOTTOM INLET WIDTH	VENT CONNECTION SIZE	SHIP WT. LB (KG)	ACCESSORY FILTER MEDIA CABINET SIZE
36045V14	14-3/16 (360)	12-9/16 (319)	9-5/16 (237)	12–11/16 (322)	4 (102)	111 (50)	16 (406)
36070V14	14-3/16 (360)	12-9/16 (319)	9-5/16 (237)	12–11/16 (322)	4 (102)	118 (54)	16 (406)
48070V17	17–1/2 (445)	15-7/8 (403)	11-9/16 (294)	16 (406)	4 (102)	132 (60)	16 (406)
48090V17	17–1/2 (445)	15-7/8 (403)	11-9/16 (294)	16 (406)	4 (102)	131 (59)	16 (406)
60090V21	21 (533)	19-3/8 (492)	13-5/16 (338)	19–1/2 (495)	4 (102)	142 (64)	20 (506)
66110V21	21 (533)	19-3/8 (492)	13-5/16 (338)	19–1/2 (495)	4 (102)	154 (70)	20 (506)
66135V24	24-1/2 (622)	22-7/8 (581	15-1/16 (383)	23 (584)	4 (102)*	168 (76)	24 (610)

*135 size furnaces require a 5 or 6–in. (127 or 152 mm) vent. Use a vent adapter between furnace and vent stack. See Installation Instructions for complete installation requirements.

SPECIFICATIONS

UNIT SIZE			36045V14	36070V14	48070V17	48090V17	60090V21	66110V21	66135V24
RATINGS AND PERFORMANCE									
Input Btuh* Nonweatherized ICS	All Standard All Low NOx Upflow	High	44,000	66,000	66,000	88,000	88,000	110,000	132,000
		Low	29,000	43,500	43,500	58,000	58,000	72,500	87,000
	All Low Nox Downflow/ Horizontal	High	42,000	63,000	63,000	84,000	84,000	105,000	126,000
		Low	29,000	43,500	43,500	58,000	58,000	72,500	87,000
Output Capacity (Btuh) Nonweatherized ICS ^	All Standard All Low NOx Upflow	High	35,000	53,000	53,000	71,000	71,000	89,000	107,000
		Low	23,000	35,000	35,000	47,000	47,000	59,000	70,000
	All Low Nox Downflow/ Horizontal	High	34,000	51,000	51,000	68,000	68,000	85,000	102,000
		Low	23,000	35,000	35,000	47,000	47,000	59,000	70,000
AFUE			80.00						
Certified Temperature Rise Range °F (°C)		High	30–60 (17–33)	30–60 (17–33)	25–55 (14–30)	40–70 (22–39)	25–55 (14–30)	30–60 (17–33)	40–70 (22–39)
		Low	20–50 (11–28)	30–60 (17–33)	15–45 (8–25)	30–60 (17–33)	15–45 (8–25)	20–50 (11–28)	25–55 (14–31)
Certified External Static Pressure	Heat/Cool		0.10/0.50	0.12/0.50	0.12/0.50	0.15/0.50	0.15/0.50	0.20/0.50	0.20/0.50
Airflow CFM ‡	Heating High/Low		915/780	1180/715	1400/1225	1380/1005	1800/1570	2055/1685	2075/1795
	Cooling		1175	1380	1740	1505	1915	2230	2160
ELECTRICAL									
Unit Volts–Hertz–Phase			115–60–1						
Operating Voltage Range	Min/Max		104/127						
Maximum Unit Amps			7.70	8.00	10.50	8.60	11.50	13.10	13.90
Maximum Wire Length (Measure one way in Ft. (M))			35 (10.9)	34 (10.4)	26 (8.1)	32 (10)	24 (7.5)	34 (10.4)	32 (9.8)
Minimum Wire Size			14	14	14	14	14	12	12
Maximum Fuse or Ckt Bkr Size (Amps)**			15	15	15	15	15	20	20
Transformer (24v)			40va	40va	40va	40va	40va	40va	40va
External Control Power Available	Heating		12va	12va	12va	12va	12va	12va	12va
	Cooling		35va	35va	35va	35va	35va	35va	35va
Air Conditioning Blower Relay			Standard						
CONTROLS									
Burners (Monoport)			2	3	3	4	4	5	6
Gas Connection Size			1/2in. NPT						
GAS CONTROLS									
Gas Valve (Redundant)	Mfr.		WhiteRodgers						
	Min. inlet pressure (In. W.C.)		4.5 (Natural Gas)						
	Max. inlet pressure (In. W.C.)		13.6 (Natural Gas)						
Ignition Device			Hot Surface						
Factory installed orifice			Size 43						
BLOWER DATA									
Variable–Speed Constant Torque (VCT) ECM			1/2	1/2	3/4	1/2	3/4	1	1
Motor Full Load Amps			6.4	6.7	9.2	6.7	9.6	10.9	11.7
RPM (Nominal)			1200	1200	1200	1200	1200	1200	1200
Blower Wheel Diameter x Width – In. (mm)			10 x 6 (254x152)	10 x 6 (254x152)	11 x 8 (279x203)	10 x 10 (254x254)	11 x 11 (279x279)	11 x 11 (279x279)	11 x 11 (279x279)

* Gas input ratings are certified for elevations to 2000 ft. (610 M). For elevations above 2000 ft. (610 M), reduce ratings 4 percent for each 1000 ft. (305 M) above sea level. Refer to National Fuel Gas Code NFPA 54/ANSI Z223.1–2012 Table F.4 or furnace installation instructions.

† Capacity in accordance with U.S. Government DOE test procedures.

‡ Airflow shown is for bottom only return-air supply for Max Cooling Airflow and heating airflows (efficiency setting) at certified external static pressure. For air delivery above 1800 CFM, see Air Delivery table for other options. A filter is required for each return-air supply. An airflow reduction of up to 7 percent may occur when using the factory-specified 4-5/16 in. (110 mm) wide, high efficiency media filter.

** Time–delay type is recommended.

ICS Isolated Combustion System

ACCESSORIES

DESCRIPTION	PART NO.	36045V14	36070V14	48070V17	48090V17	60090V21	66110V21	66135V24
External Bottom Return Filter Rack	KGBFR0401B14	X	X					
	KGBFR0501B17			X	X			
	KGBFR0601B21					X	X	
	KGBFR0701B24							X
Unframed Filter 3/4-in. (19 mm)	KGAWF1306UFR	X	X	X	X			
	KGAWF1406UFR					X	X	
	KGAWF1506UFR							X
Flue Extension	KGAFE0112UPH	X	X	X	X	X	X	X
Combustible Floor Base	KGASB0201ALL	X	X	X	X	X	X	X
Downflow Vent Guard	KGBVG0101DFG	X	X	X	X	X	X	X
Vent Extension Kit	KGAVE0101DNH	X	X	X	X	X	X	X
Chimney Adapter Kit	KGACA02014FC	X	X	X	X	X	X	X
	KGACA02015FC						X	X
Natural-to-Propane Conversion Kit*	AGAGC8NPS01A	X	X	X	X	X	X	X
Propane-to-Natural Conversion Kit	AGAGC8PNS01A	X	X	X	X	X	X	X
Twinning Kit VCT–ECM Motor	AGATWNPME01A						X	X
High Altitude Pressure Switch Kit	KGAHA5801PSW	X	X	X	X	X	X	X

* Factory-authorized and field installed. Fuel conversion kits are CSA (formerly AGA/CGA) recognized.
X = Accessory

ORIFICES		
Gas Orifice	LH32DB207	See Installation Instructions for model, altitude, and heat value usages.
	LH32DB202	
	LH32DB200	
	LH32DB205	
	LH32DB208	
	LH32DB078	
	LH32DB076	
	LH32DB203	
	LH32DB201	
	LH32DB206	
	LH32DB209	
	LH32DB210	

ACCESSORIES (continued)

DESCRIPTION	ACCESSORY
HUMIDIFIER	Model HUM
HEAT RECOVERY VENTILATOR	Model HRV
ENERGY RECOVERY VENTILATOR	Model ERV
UV LIGHTS	Model UVL

Bryant has a wide variety of thermostats for your system, please visit **www.Bryant.com** to see all thermostat and IAQ products.

DESCRIPTION	ACCESSORY	14”	17”	21”	24”
Bryant Carbon Monoxide Alarm (10 pack)	COALMBBNRB02–A10	X	X	X	X
Bryant Evolution Air Purifier - 16x25 (407x635 mm)	DGAPAXX1625	X	X		
Bryant Evolution Air Purifier - 20x25 (508x635 mm)	DGAPAXX2025			X	X
Bryant Evolution Air Purifier Repl. Filter- 16x25 (407x635 mm)	GAPBBCAR1625-A05	X	X		
Bryant Evolution Air Purifier Repl. Filter- 20x25 (508x635 mm)	GAPBBCAR2025-A05			X	X
Cartridge Media Filter - 16” (407 mm) (MERV 11)	FILXXCAR0116	X	X		
Cartridge Media Filter - 16” (407 mm) (MERV 8)	FILXXCAR0016	X	X		
Cartridge Media Filter - 20” (508 mm) (MERV 8)	FILXXCAR0020			X	
Cartridge Media Filter - 20” (508 mm) (MERV11)	FILXXCAR0120			X	
Cartridge Media Filter - 24” (610 mm) (MERV 8)	FILXXCAR0024				X
Cartridge Media Filter - 24” (610 mm) (MERV11)	FILXXCAR0124				X
EZ Flex Cabinet Side or Bottom – 16”	EZXCABCR0016	X	X		
EZ Flex Cabinet Side or Bottom – 20”	EZXCABCR0020			X	X
EZ Flex Replacement Filters 16” MERV 10	EXPXXFIL0016	X	X		
EZ Flex Replacement Filters 16” MERV 13	EXPXXFIL0316	X	X		
EZ Flex Replacement Filters 20” MERV 10	EXPXXFIL0020			X	
EZ Flex Replacement Filters 20” MERV 13	EXPXXFIL0320			X	
EZ Flex Replacement Filters 24” MERV 10	EXPXXFIL0024				X
EZ Flex Replacement Filters 24” MERV 13	EXPXXFIL0324				X
EZ-Flex Filter with End Caps - 16” (407 mm) (MERV 10)	EXPXXUNV0016	X	X		
EZ-Flex Filter with End Caps - 16” (407 mm) (MERV 13)	EXPXXUNV0316	X	X		
EZ-Flex Filter with End Caps - 20” (508 mm) (MERV 10)	EXPXXUNV0020			X	
EZ-Flex Filter with End Caps - 20” (508 mm) (MERV 13)	EXPXXUNV0320			X	
EZ-Flex Filter with End Caps - 24” (610 mm) (MERV 10)	EXPXXUNV0024				X
EZ-Flex Filter with End Caps - 24” (610 mm) (MERV 13)	EXPXXUNV0324				X
Media Filter Cabinet – 20”	FILCABXL0020			X	
Media Filter Cabinet – 24”	FILCABXL0024				X
Media Filter Cabinet –16”	FILCABXL0016	X	X		

TYPICAL WIRING SCHEMATIC

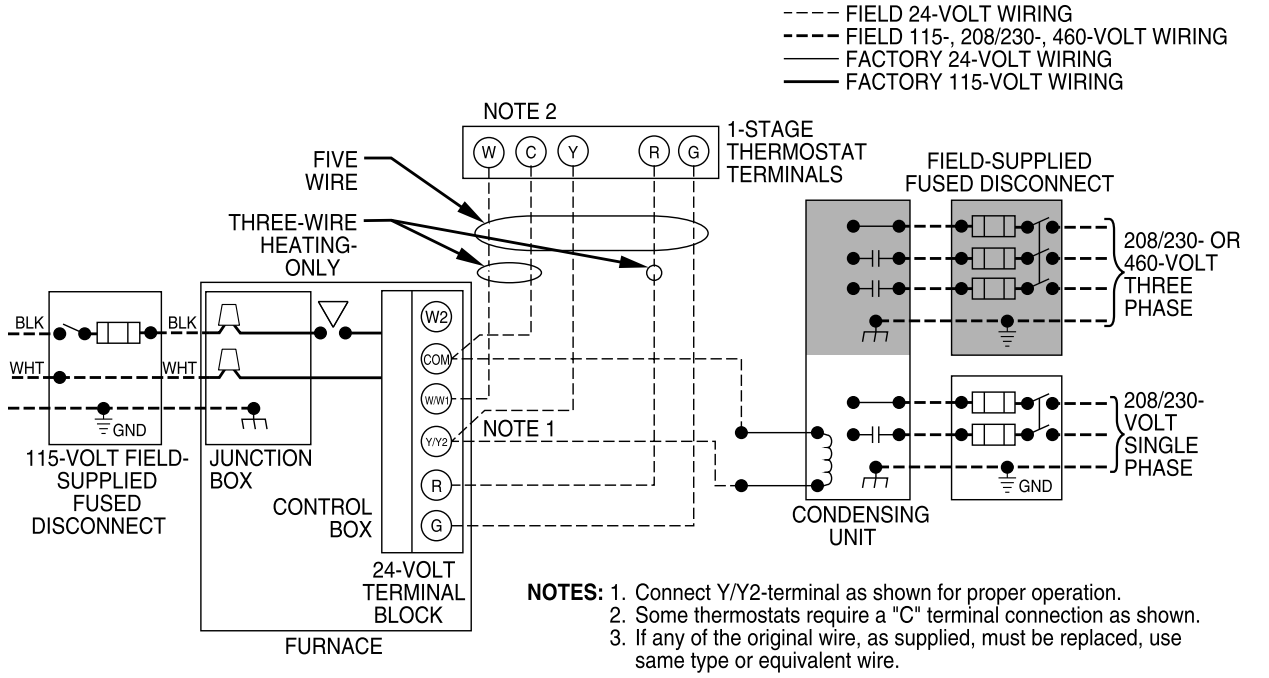

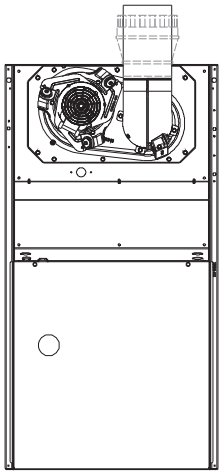

SEE NOTES: 1,2,4,7,8,9
UPFLOW

A02058

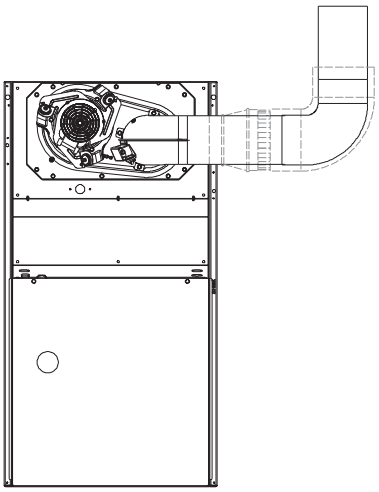

SEE NOTES: 1,2,3,4,7,8,9
UPFLOW

A02059

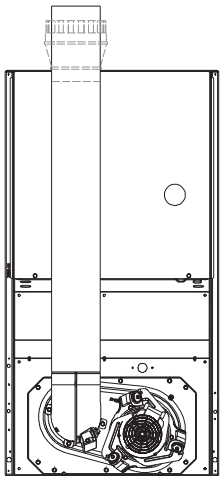

SEE NOTES: 1,2,4,5,7,8,9
DOWNFLOW

A02061

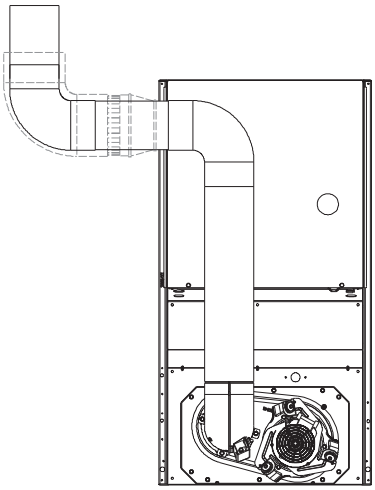

SEE NOTES:1,2,3,4,5,7,8,9
DOWNFLOW

A02060

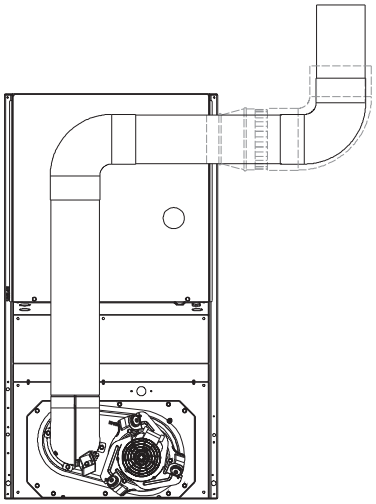

SEE NOTES: 1,2,3,4,5,7,8,9
DOWNFLOW

A02063

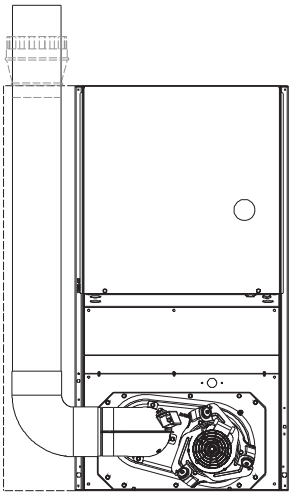

SEE NOTES: 1,2,4,5,6,7,8,9
DOWNFLOW

A02062

Venting Notes

1. For common vent, vent connector sizing and vent material: United States, latest edition of the National Fuel Gas Code (NFGC), ANSI Z223.1/NFPA 54.
2. Immediately increase to 5-in. (127 mm) vent connector outside furnace casing when 5-in. (127 mm) vent connector required, refer to Note 1.
3. Side outlet vent for upflow and downflow installations must use Type B vent immediately after exiting the furnace, except when Downflow Vent Guard is used in downflow position.
4. Type B vent where required, refer to Note 1.
5. 4 – in. (102 mm) single wall vent must be used inside furnace casing and the Downflow Vent Guard Kit.
6. Accessory Downflow Vent Guard Kit, required in downflow installations with bottom vent configuration.
7. Chimney Adapter Kit required for exterior masonry chimney applications. Refer to Chimney Adapter Kits for sizing and complete application details.
8. Secure vent connector to furnace elbow with (2) corrosion-resistant sheet metal screws, space approximately 180° apart.
9. Secure all other single wall vent connector joints with (3) corrosion-resistant screws spaced approximately 120° apart. Secure Type B vent connectors per vent connector manufacturer's recommendations.

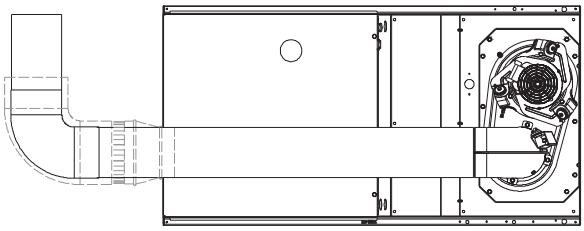

SEE NOTES: 1,2,4,5,7,8,9
HORIZONTAL RIGHT

A02068

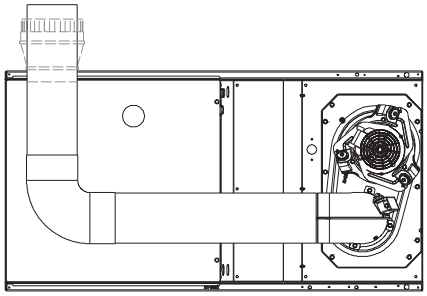

SEE NOTES: 1,2,4,5,7,8,9
HORIZONTAL RIGHT

A02070

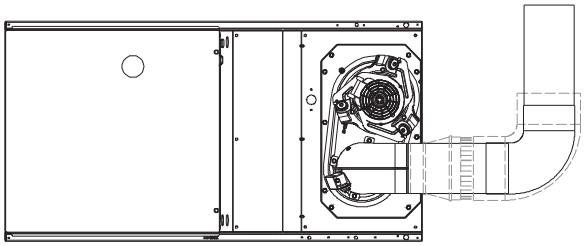

SEE NOTES: 1,2,4,7,8,9
HORIZONTAL RIGHT

A02069

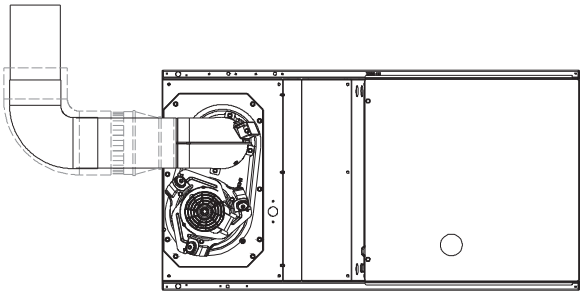

SEE NOTES: 1,2,4,7,8,9
HORIZONTAL LEFT

A02064

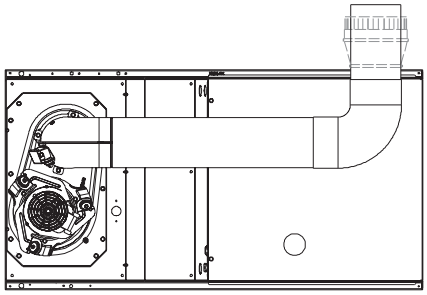

SEE NOTES: 1,2,4,5,7,8,9
HORIZONTAL LEFT

A02065

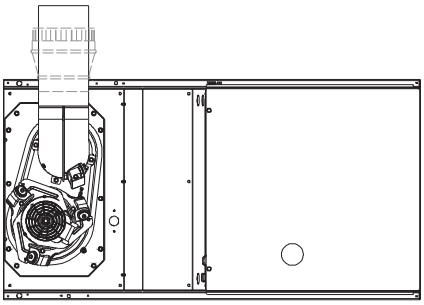

SEE NOTES: 1,2,4,5,7,8,9
HORIZONTAL LEFT

A02066

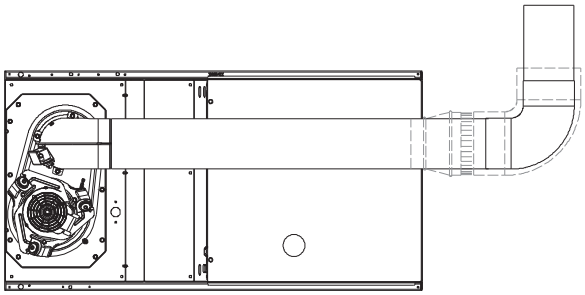

SEE NOTES: 1,2,4,5,7,8,9
HORIZONTAL LEFT

A02067

AIR DELIVERY—CFM (With Filter)*

COOLING[4] AND HEATING AIR DELIVERY - CFM (Bottom Return[5] With Filter)
(SW1-5 and SW2-2 set to OFF, except as indicated. See notes 1 and 2.)

Unit Size: 36045V14	Clg/CF Switch settings			External Static Pressure (ESP)									
Clg Switches:	SW2-8	SW2-7	SW2-6	0.1	0.2	0.3	0.4	0.5	0.6	0.7	0.8	0.9	1.0
Clg Default:	OFF	OFF	OFF	1190	1140	1100	1065	1020	985	905	800	665	525
Cooling (SW2-8,7,6)	OFF	OFF	ON	620	560	520	455	410	355	305	255	See note 4	
	OFF	ON	OFF	795	755	705	670	615	585	530	490	440	405
	OFF	ON	ON	1020	955	930	890	840	805	755	715	645	490
	ON	OFF	OFF	1190	1140	1100	1065	1020	985	905	800	665	525
	ON	OFF	ON	1455	1390	1325	1255	1175	1085	1000	880	755	575
	ON	ON	OFF	1455	1390	1325	1255	1175	1085	1000	880	755	575
	ON	ON	ON	1455	1390	1325	1255	1175	1085	1000	880	755	575
	Maximum Clg Airflow[2]			1455	1390	1325	1255	1175	1085	1000	880	755	575
CF Switches	SW2-5	SW2-4	SW2-3										
Low-Clg Default:	OFF	OFF	OFF	620	560	520	455	410	355	305	255	See note 4	
Low-Cooling (SW2-5,4,3)	OFF	OFF	ON	620	560	520	455	410	355	305	255	See note 4	
	OFF	ON	OFF	795	755	705	670	615	585	530	490	440	405
	OFF	ON	ON	1020	955	930	890	840	805	755	715	645	490
	ON	OFF	OFF	1190	1140	1100	1065	1020	985	905	800	665	525
	ON	OFF	ON	1455	1390	1325	1255	1175	1085	1000	880	755	575
	ON	ON	OFF	1455	1390	1325	1255	1175	1085	1000	880	755	575
	ON	ON	ON	1455	1390	1325	1255	1175	1085	1000	880	755	575
Cont. Fan Default:	OFF	OFF	OFF	620	560	520	455	410	355	305	255	See note 4	
Continuous Fan (SW2-5,4,3)	OFF	OFF	ON	620	560	520	455	410	355	305	255	See note 4	
	OFF	ON	OFF	795	755	705	670	615	585	530	490	440	405
	OFF	ON	ON	1020	955	930	890	840	805	755	715	645	490
	ON	OFF	OFF	1020	955	930	890	840	805	755	715	645	490
	ON	OFF	ON	1020	955	930	890	840	805	755	715	645	490
	ON	ON	OFF	1020	955	930	890	840	805	755	715	645	490
	ON	ON	ON	1020	955	930	890	840	805	755	715	645	490
Heating (SW1)	High Heat Airflow[3]			915	860	825	790	735	700	650	610	550	450
	Low Heat Airflow[3]			780	730	685	635	585	545	495	450	400	370

Unit Size: 36070V14	Clg/CF Switch settings			External Static Pressure (ESP)									
Clg Switches:	SW2-8	SW2-7	SW2-6	0.1	0.2	0.3	0.4	0.5	0.6	0.7	0.8	0.9	1.0
Clg Default:	OFF	OFF	OFF	1155	1125	1095	1065	1035	1005	975	950	915	875
Cooling (SW2-8,7,6)	OFF	OFF	ON	605	555	500	440	375	320	265	See note 4		
	OFF	ON	OFF	775	735	690	650	600	550	500	450	405	365
	OFF	ON	ON	980	950	915	880	845	810	775	735	695	655
	ON	OFF	OFF	1155	1125	1095	1065	1035	1005	975	950	915	875
	ON	OFF	ON	1370	1340	1310	1285	1260	1235	1210	1140	1025	880
	ON	ON	OFF	1505	1480	1455	1420	1380	1335	1250	1155	1045	900
	ON	ON	ON	1505	1480	1455	1420	1380	1335	1250	1155	1045	900
	Maximum Clg Airflow[2]			1505	1480	1455	1420	1380	1335	1250	1155	1045	900
CF Switches	SW2-5	SW2-4	SW2-3										
Low-Clg Default:	OFF	OFF	OFF	605	555	500	440	375	320	265	See note 4		
Low-Cooling (SW2-5,4,3)	OFF	OFF	ON	605	555	500	440	375	320	265	See note 4		
	OFF	ON	OFF	775	735	690	650	600	550	500	450	405	365
	OFF	ON	ON	980	950	915	880	845	810	775	735	695	655
	ON	OFF	OFF	1155	1125	1095	1065	1035	1005	975	950	915	875
	ON	OFF	ON	1370	1340	1310	1285	1260	1235	1210	1140	1025	880
	ON	ON	OFF	1505	1480	1455	1420	1380	1335	1250	1155	1045	900
	ON	ON	ON	1505	1480	1455	1420	1380	1335	1250	1155	1045	900
Cont. Fan Default:	OFF	OFF	OFF	605	555	500	440	375	320	265	See note 4		
Continuous Fan (SW2-5,4,3)	OFF	OFF	ON	605	555	500	440	375	320	265	See note 4		
	OFF	ON	OFF	775	735	690	650	600	550	500	450	405	365
	OFF	ON	ON	980	950	915	880	845	810	775	735	695	655
	ON	OFF	OFF	1155	1125	1095	1065	1035	1005	975	950	915	875
	ON	OFF	ON	1370	1340	1310	1285	1260	1235	1210	1140	1025	880
	ON	ON	OFF	1370	1340	1310	1285	1260	1235	1210	1140	1025	880
	ON	ON	ON	1370	1340	1310	1285	1260	1235	1210	1140	1025	880
Heating (SW1)	High Heat Airflow[3]			1190	1160	1130	1100	1070	1045	1015	985	955	900
	Low Heat Airflow[3]			725	680	635	585	530	475	425	375	330	285

AIR DELIVERY—CFM (With Filter)* (Continued)

COOLING[4] AND HEATING AIR DELIVERY - CFM (Bottom Return[5] With Filter) (SW1-5 and SW2-2 set to OFF, except as indicated. See notes 1 and 2.)													
Unit Size: 48070V17	**Clg/CF Switch settings**			**External Static Pressure (ESP)**									
Clg Switches:	SW2-8	SW2-7	SW2-6	0.1	0.2	0.3	0.4	0.5	0.6	0.7	0.8	0.9	1.0
Clg Default:	OFF	OFF	OFF	1600	1570	1535	1500	1465	1430	1400	1365	1335	1300
Cooling (SW2-8,7,6)	OFF	OFF	ON	590	520	440	365	300	235	See note 4			
	OFF	ON	OFF	790	730	670	610	550	485	430	380	330	275
	OFF	ON	ON	1025	980	930	880	835	785	735	690	635	590
	ON	OFF	OFF	1230	1190	1150	1105	1065	1025	980	940	900	860
	ON	OFF	ON	1390	1355	1315	1280	1240	1200	1165	1125	1090	1055
	ON	ON	OFF	1600	1570	1535	1500	1465	1430	1400	1365	1335	1300
	ON	ON	ON	1855	1830	1800	1770	1740	1695	1645	1600	1520	1415
	Maximum Clg Airflow[2]			1855	1830	1800	1770	1740	1695	1645	1600	1520	1415
CF Switches	SW2-5	SW2-4	SW2-3										
Low-Clg Default:	OFF	OFF	OFF	590	520	440	365	300	235	See note 4			
Low-Cooling (SW2-5,4,3)	OFF	OFF	ON	590	520	440	365	300	235	See note 4			
	OFF	ON	OFF	790	730	670	610	550	485	430	380	330	275
	OFF	ON	ON	1025	980	930	880	835	785	735	690	635	590
	ON	OFF	OFF	1230	1190	1150	1105	1065	1025	980	940	900	860
	ON	OFF	ON	1390	1355	1315	1280	1240	1200	1165	1125	1090	1055
	ON	ON	OFF	1600	1570	1535	1500	1465	1430	1400	1365	1335	1300
	ON	ON	ON	1855	1830	1800	1770	1740	1695	1645	1600	1520	1415
Cont. Fan Default:	OFF	OFF	OFF	590	520	440	365	300	235	See note 4			
Continuous Fan (SW2-5,4,3)	OFF	OFF	ON	590	520	440	365	300	235	See note 4			
	OFF	ON	OFF	685	625	565	505	445	385	325	265	See note 4	
	OFF	ON	ON	790	730	670	610	550	485	430	380	330	275
	ON	OFF	OFF	790	730	670	610	550	485	430	380	330	275
	ON	OFF	ON	790	730	670	610	550	485	430	380	330	275
	ON	ON	OFF	790	730	670	610	550	485	430	380	330	275
	ON	ON	ON	790	730	670	610	550	485	430	380	330	275
Heating (SW1)	High Heat Airflow[3]			1410	1375	1340	1300	1260	1225	1190	1155	1120	1085
	Low Heat Airflow[3]			1235	1195	1155	1110	1070	1025	985	945	905	865

Unit Size: 48090V17	**Clg/CF Switch settings**			**External Static Pressure (ESP)**									
Clg Switches:	SW2-8	SW2-7	SW2-6	0.1	0.2	0.3	0.4	0.5	0.6	0.7	0.8	0.9	1.0
Clg Default:	OFF	OFF	OFF	1560	1520	1485	1450	1415	1380	1340	1300	1260	1115
Cooling (SW2-8,7,6)	OFF	OFF	ON	680	605	495	415	345	275	See note 4			
	OFF	ON	OFF	835	770	700	600	535	465	410	350	285	240
	OFF	ON	ON	1035	980	930	870	795	720	665	605	555	505
	ON	OFF	OFF	1210	1165	1125	1080	1030	975	905	845	790	740
	ON	OFF	ON	1375	1335	1300	1260	1220	1175	1125	1075	1010	955
	ON	ON	OFF	1560	1520	1485	1450	1415	1380	1340	1300	1260	1115
	ON	ON	ON	1640	1605	1570	1540	1505	1470	1435	1390	1325	1110
	Maximum Clg Airflow[2]			1640	1605	1570	1540	1505	1470	1435	1390	1325	1110
CF Switches	SW2-5	SW2-4	SW2-3										
Low-Clg Default:	OFF	OFF	OFF	680	605	495	415	345	275	See note 4			
Low-Cooling (SW2-5,4,3)	OFF	OFF	ON	680	605	495	415	345	275	See note 4			
	OFF	ON	OFF	835	770	700	600	535	465	410	350	285	240
	OFF	ON	ON	1035	980	930	870	795	720	665	605	555	505
	ON	OFF	OFF	1210	1165	1125	1080	1030	975	905	845	790	740
	ON	OFF	ON	1375	1335	1300	1260	1220	1175	1125	1075	1010	955
	ON	ON	OFF	1560	1520	1485	1450	1415	1380	1340	1300	1260	1115
	ON	ON	ON	1640	1605	1570	1540	1505	1470	1435	1390	1325	1110
Cont. Fan Default:	OFF	OFF	OFF	680	605	495	415	345	275	See note 4			
Continuous Fan (SW2-5,4,3)	OFF	OFF	ON	680	605	495	415	345	275	See note 4			
	OFF	ON	OFF	835	770	700	600	535	465	410	350	285	240
	OFF	ON	ON	1035	980	930	870	795	720	665	605	555	505
	ON	OFF	OFF	1210	1165	1125	1080	1030	975	905	845	790	740
	ON	OFF	ON	1375	1335	1300	1260	1220	1175	1125	1075	1010	955
	ON	ON	OFF	1560	1520	1485	1450	1415	1380	1340	1300	1260	1115
	ON	ON	ON	1560	1520	1485	1450	1415	1380	1340	1300	1260	1115
Heating (SW1)	High Heat Airflow[3]			1400	1360	1325	1285	1245	1200	1155	1110	1045	995
	Low Heat Airflow[3]			1035	980	930	870	795	720	665	605	555	505

AIR DELIVERY—CFM (With Filter)* (Continued)

COOLING[4] AND HEATING AIR DELIVERY - CFM (Bottom Return[5] With Filter) (SW1-5 and SW2-2 set to OFF, except as indicated. See notes 1 and 2.)													
Unit Size: 60090V21	**Clg/CF Switch settings**			**External Static Pressure (ESP)**									
Clg Switches:	SW2-8	SW2-7	SW2-6	0.1	0.2	0.3	0.4	0.5	0.6	0.7	0.8	0.9	1.0
Clg Default:	OFF	OFF	OFF	1985	1935	1885	1835	1785	1735	1685	1630	1583	1532
Cooling (SW2-8,7,6)	OFF	OFF	ON	860	755	650	545	445	350	235	See note 4		
	OFF	ON	OFF	1085	1000	910	830	735	655	565	485	405	310
	OFF	ON	ON	1255	1180	1105	1025	950	870	790	715	640	570
	ON	OFF	OFF	1425	1355	1290	1220	1150	1085	1015	940	870	800
	ON	OFF	ON	1630	1575	1515	1455	1395	1330	1270	1210	1155	1090
	ON	ON	OFF	1985	1935	1885	1835	1785	1735	1685	1630	1583	1532
	ON	ON	ON	2100	2055	2010	1960	1915	1870	1820	1775	1715	1640
	Maximum Clg Airflow[2]			2100	2055	2010	1960	1915	1870	1820	1775	1715	1640
CF Switches	SW2-5	SW2-4	SW2-3										
Low-Clg Default:	OFF	OFF	OFF	860	755	650	545	445	350	235	See note 4		
Low-Cooling (SW2-5,4,3)	OFF	OFF	ON	700	575	455	345	225	See note 4				
	OFF	ON	OFF	860	755	650	545	445	350	235	See note 4		
	OFF	ON	ON	1085	1000	910	830	735	655	565	485	405	310
	ON	OFF	OFF	1255	1180	1105	1025	950	870	790	715	640	570
	ON	OFF	ON	1425	1355	1290	1220	1150	1085	1015	940	870	800
	ON	ON	OFF	1630	1575	1515	1455	1395	1330	1270	1210	1155	1090
	ON	ON	ON	1985	1935	1885	1835	1785	1735	1685	1630	1583	1532
Cont. Fan Default:	OFF	OFF	OFF	860	755	650	545	445	350	235	See note 4		
Continuous Fan (SW2-5,4,3)	OFF	OFF	ON	700	575	455	345	225	See note 4				
	OFF	ON	OFF	860	755	650	545	445	350	235	See note 4		
	OFF	ON	ON	1085	1000	910	830	735	655	565	485	405	310
	ON	OFF	OFF	1255	1180	1105	1025	950	870	790	715	640	570
	ON	OFF	ON	1255	1180	1105	1025	950	870	790	715	640	570
	ON	ON	OFF	1255	1180	1105	1025	950	870	790	715	640	570
	ON	ON	ON	1255	1180	1105	1025	950	870	790	715	640	570
Heating (SW1)	High Heat Airflow[3]			1830	1775	1725	1675	1625	1570	1520	1465	1410	1360
	Low Heat Airflow[3]			1600	1540	1485	1430	1370	1315	1255	1195	1140	1070
Unit Size: 66110V21	**Clg/CF Switch settings**			**External Static Pressure (ESP)**									
Clg Switches:	SW2-8	SW2-7	SW2-6	0.1	0.2	0.3	0.4	0.5	0.6	0.7	0.8	0.9	1.0
Clg Default:	OFF	OFF	OFF	2055	2000	1950	1900	1840	1790	1740	1675	1625	1565
Cooling (SW2-8,7,6)	OFF	OFF	ON	855	755	See note 4							
	OFF	ON	OFF	1060	985	875	800	700	See note 4				
	OFF	ON	ON	1250	1180	1095	1025	925	860	775	715	See note 4	
	ON	OFF	OFF	1445	1380	1320	1235	1175	1100	1035	955	900	825
	ON	OFF	ON	1685	1630	1560	1505	1445	1375	1320	1265	1195	1140
	ON	ON	OFF	2055	2000	1950	1900	1840	1790	1740	1675	1625	1565
	ON	ON	ON	2465	2415	2365	2305	2230	2140	2045	1925	1805	1655
	Maximum Clg Airflow[2]			2465	2415	2365	2305	2230	2140	2045	1925	1805	1655
CF Switches	SW2-5	SW2-4	SW2-3										
Low-Clg Default:	OFF	OFF	OFF	855	755	See note 4							
Low-Cooling (SW2-5,4,3)	OFF	OFF	ON	640	540	See note 4							
	OFF	ON	OFF	855	755	See note 4							
	OFF	ON	ON	1060	985	875	800	700	See note 4				
	ON	OFF	OFF	1250	1180	1095	1025	925	860	775	715	See note 4	
	ON	OFF	ON	1445	1380	1320	1235	1175	1100	1035	955	900	825
	ON	ON	OFF	1685	1630	1560	1505	1445	1375	1320	1265	1195	1140
	ON	ON	ON	2055	2000	1950	1900	1840	1790	1740	1675	1625	1565
Cont. Fan Default:	OFF	OFF	OFF	855	755	See note 4							
Continuous Fan (SW2-5,4,3)	OFF	OFF	ON	640	540	See note 4							
	OFF	ON	OFF	855	755	See note 4							
	OFF	ON	ON	1060	985	875	800	700	See note 4				
	ON	OFF	OFF	1250	1180	1095	1025	925	860	775	715	See note 4	
	ON	OFF	ON	1445	1380	1320	1235	1175	1100	1035	955	900	825
	ON	ON	OFF	1445	1380	1320	1235	1175	1100	1035	955	900	825
	ON	ON	ON	1445	1380	1320	1235	1175	1100	1035	955	900	825
Heating (SW1)	High Heat Airflow[3]			2105	2055	2005	1955	1895	1850	1795	1735	1665	1580
	Low Heat Airflow[3]			1740	1685	1620	1560	1505	1440	1385	1325	1260	1205

AIR DELIVERY—CFM (With Filter)* (Continued)

COOLING[4] AND HEATING AIR DELIVERY - CFM (Bottom Return[5] With Filter) (SW1-5 and SW2-2 set to OFF, except as indicated. See notes 1 and 2.)													
Unit Size: 66135V24	**Clg/CF Switch settings**			**External Static Pressure (ESP)**									
Clg Switches:	SW2-8	SW2-7	SW2-6	0.1	0.2	0.3	0.4	0.5	0.6	0.7	0.8	0.9	1.0
Clg Default:	OFF	OFF	OFF	2105	2050	1995	1940	1880	1820	1765	1705	1650	1590
Cooling (SW2-8,7,6)	OFF	OFF	ON	990	885	780	665	570	See note 4				
	OFF	ON	OFF	1180	1090	995	900	815	715	635	555	475	400
	OFF	ON	ON	1355	1270	1190	1105	1020	940	855	775	700	630
	ON	OFF	OFF	1535	1465	1395	1320	1245	1165	1095	1025	945	875
	ON	OFF	ON	1735	1670	1605	1535	1470	1405	1335	1270	1205	1140
	ON	ON	OFF	2105	2050	1995	1940	1880	1820	1765	1705	1650	1590
	ON	ON	ON	2280	2225	2175	2120	2065	2010	1955	1905	1850	1800
	Maximum Clg Airflow[2]			2360	2310	2265	2215	2160	2115	2060	2010	1960	1870
CF Switches	SW2-5	SW2-4	SW2-3										
Low-Clg Default:	OFF	OFF	OFF	990	885	780	665	570	See note 4				
Low-Cooling (SW2-5,4,3)	OFF	OFF	ON	800	670	540	410	280	See note 4				
	OFF	ON	OFF	990	885	780	665	570	See note 4				
	OFF	ON	ON	1180	1090	995	900	815	715	635	555	475	400
	ON	OFF	OFF	1355	1270	1190	1105	1020	940	855	775	700	630
	ON	OFF	ON	1535	1465	1395	1320	1245	1165	1095	1025	945	875
	ON	ON	OFF	1735	1670	1605	1535	1470	1405	1335	1270	1205	1140
	ON	ON	ON	2105	2050	1995	1940	1880	1820	1765	1705	1650	1590
Cont. Fan Default:	OFF	OFF	OFF	740	605	470	360	255	See note 4				
Continuous Fan (SW2-5,4,3)	OFF	OFF	ON	740	605	470	360	255	See note 4				
	OFF	ON	OFF	900	775	650	525	400	See note 4				
	OFF	ON	ON	1080	980	885	785	680	595	510	430	345	260
	ON	OFF	OFF	1080	980	885	785	680	595	510	430	345	260
	ON	OFF	ON	1080	980	885	785	680	595	510	430	345	260
	ON	ON	OFF	1080	980	885	785	680	595	510	430	345	260
	ON	ON	ON	1080	980	885	785	680	595	510	430	345	260
Heating (SW1)	High Heat Airflow[3]			2130	2075	2020	1970	1910	1855	1805	1745	1690	1630
	Low Heat Airflow[3]			1855	1795	1730	1670	1605	1545	1480	1420	1360	1300

1. Nominal 350 CFM/ton cooling airflow is delivered with SW1-5 and SW2-2 set to OFF.
   Set both SW1-5 and SW2-2 to ON for +7% airflow (nominal 370 CFM/ton).
   Set SW1-5 to ON and SW2-2 to OFF for +15% airflow (nominal 400 CFM/ton).
   Set SW2-2 to ON and SW1-5 to OFF for -7% airflow (nominal 325 CFM/ton).
   The above adjustments in airflow are subject to motor horsepower range/capacity.
   This applies to Cooling and Low-Cooling airflow, but does not affect continuous fan airflow.
2. Maximum cooling airflow is achieved when switches SW2-6, SW2-7, SW2-8 and SW1-5 are set to ON, and SW2-2 is set to OFF.
3. All heating CFM's are when comfort/efficiency adjustment switch (SW1-4) is set to OFF
4. Ductwork must be sized for high-heating CFM within the operational range of ESP. Operation within the blank areas of the chart is not recommended because high-heat operation will be above 1.0 ESP.
5. All airflows on 21" casing size furnaces are 5% less on side return only installations.
6. Side returns for 24.5" casing sizes require two sides, or side and bottom, to allow sufficient airflow at the return of the furnace.
7. Airflows over 1800 CFM require bottom return, two-side return, or bottom and side return or excessive watt draw may result. A minimum filter size of 20x25" (508 x 635 mm) is required.

⚠ WARNING

FIRE, EXPLOSION, ASPHYXIATION HAZARD

Improper adjustment, alteration, service, maintenance, or installation can cause serious injury or death.

Read and follow instructions and precautions in User's Information Manual provided with this furnace. Installation and service must be performed by a qualified service agency or the gas supplier.

⚠ CAUTION

Check entire gas assembly for leaks after lighting this appliance.

INSTALLATION

1. This furnace must be installed in accordance with the manufacturer's instructions and local codes. In the absence of local codes, follow the National Fuel Gas Code ANSI Z223.1 / NFPA54 or CSA B-149. 1 Gas Installation Code.
2. This furnace must be installed so there are provisions for combustion and ventilation air. See manufacturer's installation information provided with this appliance.

OPERATION

This furnace is equipped with manual reset limit switch(es) in burner compartment to protect against overheat conditions that can result from inadequate combustion air supply or blocked vent conditions.

1. Do not bypass limit switches.
2. If a limit opens, call a quallified serviceman to correct the condition and reset limit switch.

INSTALLATION

MINIMUM INCHES CLEARANCE TO COMBUSTIBLE CONSTRUCTION

This forced air furnace is equipped for use with natural gas at altitudes 0 - 10,000 ft (0 - 3,050m).

An accessory kit, supplied by the manufacturer, shall be used to convert to propane gas use or may be required for some natural gas applications.

This furnace is for indoor installation in a building constructed on site.

This furnace may be installed on combustible flooring in alcove or closet at minimum clearance as indicated by the diagram from combustible material.

This furnace may be used with a Type B-1 Vent and may be vented in common with other gas fired appliances.

This furnace is approved for UPFLOW, DOWNFLOW, and HORIZONTAL installations.

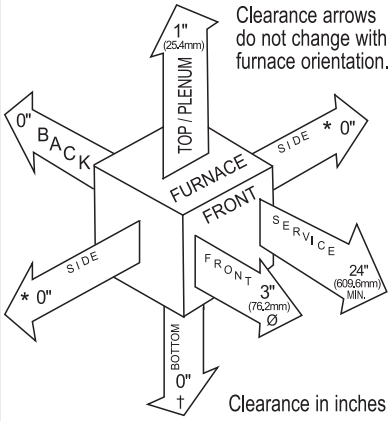

Vent Clearance to combustibles:
For Single Wall vents 6 inches (6 po).
For Type B-1 vent type 1 inch (1 po).

MINIMUM INCHES CLEARANCE TO COMBUSTIBLE CONSTRUCTION

DOWNFLOW POSITIONS:

† Installation on non-combustible floors only.

For Installation on combustible flooring only when installed on special base, Part No. KGASB0201ALL or NAHA01101SB, Coil Assembly, Part No. CAR, CAP, CNPV, CNRV, END4X, ENW4X, WENC, WTNC, WENW OR WTNW.

Ø 18 inches front clearance required for alcove.

* Indicates supply or return sides when furnace is in the horizontal position. Line contact only permissible between lines formed by intersections of the Top and two Sides of the furnace jacket, and building joists, studs or framing.

336996-101 REV. C

A10269

GUIDE SPECIFICATIONS

Gas Furnace

820TA/821TA

General

SYSTEM DESCRIPTION

Furnish a _____ fixed capacity gas-fired furnace for use with natural gas or propane (factory authorized conversion kit required for propane); furnish cold air return plenum.

QUALITY ASSURANCE

Unit will be designed, tested and constructed to the current ANSI Z 21.47/CSA 2.3 design standard for gas-fired central furnaces.

Unit will be 3rd party certified by CSA to the current ANSI Z 21.47/CSA 2.3 design standard for gas-fired central furnaces.

Unit will carry the CSA Blue Star® label.

Unit efficiency testing will be performed per the current DOE test procedure as listed in the Federal Register.

Unit will be certified for capacity and efficiency and listed in the latest AHRI Consumer's Directory of Certified Efficiency Ratings.

Unit shall carry the current Federal Trade Commission Energy Guide efficiency label.

DELIVERY, STORAGE AND HANDLING

Unit shall be shipped as single package only and is stored and handled per unit manufacturer's recommendations.

WARRANTY (for inclusion by specifying engineer)

U.S. only. Warranty certificate available upon request.

Products

EQUIPMENT

Components shall include: slow-opening two stage gas valve to reduce ignition noise, regulate gas flow, with electric switch gas shut-off; flame proving sensor, hot surface igniter, pressure switch assembly, flame rollout switch, blower and inducer assembly, 40va transformer; low-voltage (heating) (heating/cooling) thermostat.

Blower Wheel and Blower Motor

Galvanized blower wheel shall be centrifugal type, statically and dynamically balanced. Blower motor of ECM type shall be permanently lubricated with sealed bearings, of _____hp, and shall be multiple-speed direct drive. Blower motor shall be soft mounted to the blower scroll to reduce vibration transmission.

Filters

Furnace may have reusable-type filters. Filter shall be _____ (x) _____in. (mm). An accessory high efficiency Media Filter is available as an option. _____ Media Filter.

Casing

Casing shall be of .030 in. (.76 mm) thickness minimum, pre-painted steel.

Two Speed Inducer Motor

Two Speed Inducer motor shall be soft mounted to reduce vibration transmission.

Draft Safeguard Switch

Draft Safeguard Switch (blocked vent safeguard) shall be factory installed to reduce the possibility of vent gas infiltration due to a blocked or restricted vent pipe.

Heat Exchangers

Heat exchangers shall be a 4-Pass 20 gage aluminized steel of fold-and-crimp sectional design when applied operating under negative pressure.

Controls

Control shall include a micro-processor based integrated electronic control board with at least 11 service troubleshooting codes displayed via diagnostic flashing enhanced LED light on the control, a self-test feature that checks all major functions of the furnace within one minute, and a replaceable automotive-type circuit protection fuse. Multiple operational settings available including, separate blower speeds for low heat, high heat, low cooling, high cooling and continuous fan. Continuous fan speed may be adjusted from the thermostat. Cooling airflow will be selectable between 350 or 400 CFM per ton of air conditioning. Features will also include temporary reduced airflow in the cooling mode for improved dehumidification when a control or Thermidistat™ is selected as the thermostat.

OPERATING CHARACTERISTICS

Heating Capacity shall be _____ Btuh input; _____ Btuh output capacity.

Fuel Gas Efficiency shall be 80% AFUE.

Air delivery shall be _____ CFM minimum at 0.50 in. W.C. external static pressure.

Dimensions shall be: depth _____ in. (mm); width _____ in. (mm); height_____in. (mm). (casing only). Height shall be_____in. (mm). with A/C coil and _____in. (mm) overall with plenum.

ELECTRICAL REQUIREMENTS

Electrical supply shall be 115 volts, 60 Hz, single-phase (nominal). Minimum wire size shall be_____AWG; maximum fuse size or circuit breaker shall be _____Amps.

SPECIAL FEATURES

Refer to section of the product data sheet identifying accessories and descriptions for specific features and available enhancements.

©2019 Bryant Heating & Cooling Systems 7310 W. Morris St. Indianapolis, IN 46231
Edition Date: 3/19

Catalog No. PDS820TA-01

Manufacturer reserves the right to discontinue, or change at any time, specifications or designs without notice and without incurring obligations.

Replaces: NEW